Specification Volume 0

SPECIFICATION OF THE BLUETOOTH SYSTEM

Wireless Connections Made Easy

Master Table of Contents & Compliance Requirements

Covered Core Package version:
3.0 + HS
Current Master TOC
Publication date: 21 April 2009

Bluetooth®

Revision History

The Revision History is shown in the “Appendix” on page 47[Vol. 0].

Contributors

The persons who contributed to this specification are listed in the Appendix.

Web Site

This specification can also be found on the official Bluetooth web site:
http://www.bluetooth.com

Disclaimer and Copyright Notice

The copyright in these specifications is owned by the Promoter Members of Bluetooth SIG, Inc. (“Bluetooth SIG”). Use of these specifications and any related intellectual property (collectively, the “Specification”), is governed by the Promoters Membership Agreement among the Promoter Members and Bluetooth SIG (the “Promoters Agreement”), certain membership agreements between Bluetooth SIG and its Adopter and Associate Members (the “Membership Agreements”) and the Bluetooth Specification Early Adopters Agreements (“1.2 Early Adopters Agreements”) among Early Adopter members of the unincorporated Bluetooth special interest group and the Promoter Members (the “Early Adopters Agreement”). Certain rights and obligations of the Promoter Members under the Early Adopters Agreements have been assigned to Bluetooth SIG by the Promoter Members.

Use of the Specification by anyone who is not a member of Bluetooth SIG or a party to an Early Adopters Agreement (each such person or party, a “Member”), is prohibited. The legal rights and obligations of each Member are governed by their applicable Membership Agreement, Early Adopters Agreement or Promoters Agreement. No license, express or implied, by estoppel or otherwise, to any intellectual property rights are granted herein.

Any use of the Specification not in compliance with the terms of the applicable Membership Agreement, Early Adopters Agreement or Promoters Agreement is prohibited and any such prohibited use may result in termination of the applicable Membership Agreement or Early Adopters Agreement and other liability permitted by the applicable agreement or by applicable law to Bluetooth SIG or any of its members for patent, copyright and/or trademark infringement.

THE SPECIFICATION IS PROVIDED “AS IS” WITH NO WARRANTIES WHATSOEVER, INCLUDING ANY WARRANTY OF MERCHANTABILITY, NONINFRINGEMENT, FITNESS FOR ANY PARTICULAR PURPOSE, SATISFACTORY QUALITY, OR REASONABLE SKILL OR CARE, OR ANY WARRANTY ARISING OUT OF ANY COURSE OF DEALING, USAGE, TRADE PRACTICE, PROPOSAL, SPECIFICATION OR SAMPLE.

Each Member hereby acknowledges that products equipped with the Bluetooth® technology (“Bluetooth® Products”) may be subject to various regulatory controls under the laws and regulations of various governments worldwide. Such laws and regulatory controls may govern, among other things, the combination, operation, use, implementation and distribution of Bluetooth® Products. Examples of such laws and regulatory controls include, but are not limited to, airline regulatory controls, telecommunications regulations, technology transfer controls and health and safety regulations. Each Member is solely responsible for the compliance by their Bluetooth® Products with any such laws and regulations and for obtaining any and all required authorizations, permits, or licenses for their Bluetooth® Products related to such regulations within the applicable jurisdictions. Each Member acknowledges that nothing in the Specification provides any information or assistance in connection with securing such compliance, authorizations or licenses. NOTHING IN THE SPECIFICATION CREATES ANY WARRANTIES, EITHER EXPRESS OR IMPLIED, REGARDING SUCH LAWS OR REGULATIONS.

ALL LIABILITY, INCLUDING LIABILITY FOR INFRINGEMENT OF ANY INTELLECTUAL PROPERTY RIGHTS OR FOR NONCOMPLIANCE WITH LAWS, RELATING TO USE OF THE SPECIFICATION IS EXPRESSLY DISCLAIMED. BY USE OF THE SPECIFICATION, EACH MEMBER EXPRESSLY WAIVES ANY CLAIM AGAINST BLUETOOTH SIG AND ITS PROMOTER MEMBERS RELATED TO USE OF THE SPECIFICATION.

Bluetooth SIG reserves the right to adopt any changes or alterations to the Specification as it deems necessary or appropriate.

Copyright © 1999 – 2009

Ericsson AB,
Lenovo,
Intel Corporation,
Microsoft Corporation,
Motorola, Inc.,
Nokia Corporation,
Toshiba Corporation

*Third-party brands and names are the property of their respective owners.

MASTER TABLE OF CONTENTS

This table of contents (TOC) covers the entire Bluetooth Specification.
In addition each volume has a TOC and each part of a volume is preceded by a detailed TOC.

THE BLUETOOTH SPECIFICATION MASTER TABLE OF CONTENTS

In the following Master Table of Contents:

- The TOC for each Volume starts at the top of a page.
- The Volume number in black is followed by the Volume name in red.

Note: Each Volume is a self contained book which is published and updated separately and is equipped with a TOC of its own. However, this Master TOC is also revised as soon as any of the other Volumes are updated.

- A Volume contains one or more Parts (A, B, etc.); each Part can be viewed independently and has its own TOC.

Red or blue text on the following pages indicates hypertext links that take you directly to the indicated section, on condition that you have access to a complete specification.

Specification Volume 0
Master Table of Contents & Compliance Requirements

Part A
MASTER TABLE OF CONTENTS

The Bluetooth Specification Master Table of Contents 7

Part B
BLUETOOTH COMPLIANCE REQUIREMENTS

Contents 35
1 Introduction 37
2 Scope 38
3 Definitions.....39
3.1 Types of Bluetooth Products 39
4 Core Configurations.....41
4.1 Specification Naming Conventions 41
4.2 EDR Configurations 41
4.3 High Speed (HS) Configuration.....42

Part C
APPENDIX

Contents 45
1 Revision History.....47
1.1 [Vol 0] Master TOC & Compliance Requirements.....47
1.2 [Vol 1] Architecture & Terminology Overview 47
1.3 [Vol 2 & 3] Core System Package 49
1.4 [Vol 4] Transport Layers 52
2 Contributors.....53
2.1 [Vol 0] Master TOC & Compliance Requirements.....53
2.2 [Vol 1] Architecture &Terminology Overview 53
2.3 [Vol 2] Core System Package, Controller.....57
2.4 [Vol 3] Core System Package, Host.....73
2.5 [Vol 4] Host Controller Interface [Transport Layer].....79
2.6 [Vol 5] Core System Package [AMP Controller Volume].....80

Specification Volume 1
Architecture & Terminology Overview

Table of Contents **5**

Part A
ARCHITECTURE

Contents **11**

1 General Description **15**
1.1 Overview of BR/EDR Operation 15
1.2 Overview Of AMP Operation 17
1.3 Nomenclature 18

2 Core System Architecture **23**
2.1 Core Architectural Blocks 27

3 Data Transport Architecture **31**
3.1 Core Traffic Bearers 32
3.2 Transport Architecture Entities 37
3.3 Physical Channels 40
3.4 Physical Links 46
3.5 Logical Links and Logical Transports 48
3.6 L2CAP Channels 58

4 Communication Topology **59**
4.1 Piconet Topology 59
4.2 Operational Procedures and Modes 61

5 Secure Simple Pairing Overview **67**
5.1 Security Goals 67
5.2 Passive Eavesdropping Protection 67
5.3 Man-In-The-Middle Protection 68
5.4 Association Models 69
5.5 AMP Security 71

Part B
ACRONYMS & ABBREVIATIONS

Contents **74**

1 List of Acronyms and Abbreviations **75**

Part C
CORE SPECIFICATION CHANGE HISTORY

Contents **85**

1 Deprecated Features 86

2 Changes from V1.1 to V1.2 87

2.1 New Features 87
2.2 Structure Changes 87
2.3 Deprecated Features list 87
2.4 Changes in Wording 88
2.5 Nomenclature Changes 88

3 Changes from V1.2 to V2.0 + EDR 89

3.1 New Features 89
3.2 Deprecated Features 89

4 Changes from V2.0 + EDR to V2.1 + EDR 90

4.1 New features 90
4.2 Deprecated Features 90

5 Changes From V2.1 + EDR To V3.0 + HS 91

5.1 New Features 91
5.2 Deprecated Features 91

Part D
MIXING OF SPECIFICATION VERSIONS

Contents 95

1 Mixing of Specification Versions 96

1.1 Features and their Types 98
1.2 Core Specification Addendums 99

Part E
IEEE LANGUAGE

Contents 103

1 Use of IEEE Language 105

1.1 Shall 105
1.2 Must 106
1.3 Will 106
1.4 Should 106
1.5 May 106
1.6 Can 107

Specification Volume 2
Core System Package
[Controller volume]

Contents 5

Part A
RADIO SPECIFICATION

Contents 29
1 Scope 31
2 Frequency Bands and Channel Arrangement 33
3 Transmitter Characteristics 34
3.1 Basic Rate 35
3.2 Enhanced Data Rate 37
4 Receiver Characteristics 44
4.1 Basic Rate 44
4.2 Enhanced Data Rate 46
5 Appendix A 49
5.1 Nominal Test Conditions 49
5.2 Extreme Test Conditions 50
6 Appendix B 51
7 Appendix C 52
7.1 Enhanced Data Rate Modulation Accuracy 52

Part B
BASEBAND SPECIFICATION

Contents 59
1 General Description 63
1.1 Bluetooth Clock 64
1.2 Bluetooth Device Addressing 66
1.3 Access Codes 67
2 Physical Channels 68
2.1 Physical Channel Definition 69
2.2 Basic Piconet Physical Channel 69
2.3 Adapted Piconet Physical Channel 74
2.4 Page Scan Physical Channel 75
2.5 Inquiry Scan Physical Channel 79
2.6 Hop Selection 81
3 Physical Links 94

3.1 Link Supervision....94
4 Logical Transports....95
4.1 General....95
4.2 Logical Transport Address (LT_ADDR)....95
4.3 Synchronous Logical Transports....96
4.4 Asynchronous Logical Transport....96
4.5 Transmit/Receive Routines....97
4.6 Active Slave Broadcast Transport....102
4.7 Parked Slave Broadcast Transport....103
5 Logical Links....104
5.1 Link Control Logical Link (LC)....104
5.2 ACL Control Logical Link (ACL-C)....104
5.3 User Asynchronous/Isochronous Logical Link (ACL-U)....104
5.4 User Synchronous Data Logical Link (SCO-S)....105
5.5 User Extended Synchronous Data Logical Link (eSCO-S)....105
5.6 Logical Link Priorities....105
6 Packets....106
6.1 General Format....106
6.2 Bit Ordering....107
6.3 Access Code....108
6.4 Packet Header....113
6.5 Packet Types....115
6.6 Payload Format....125
6.7 Packet Summary....130
7 Bitstream Processing....132
7.1 Error Checking....133
7.2 Data Whitening....136
7.3 Error Correction....137
7.4 FEC Code: Rate 1/3....137
7.5 FEC Code: Rate 2/3....138
7.6 ARQ Scheme....139
7.7 Erroneous Synchronous Data Reporting....147
8 Link Controller Operation....148
8.1 Overview of States....148
8.2 Standby State....149
8.3 Connection Establishment Substates....149
8.4 Device Discovery Substates....158
8.5 Connection State....163
8.6 Active Mode....164
8.7 Sniff Mode....178
8.8 Hold Mode....181

8.9 Park State 182

9 Audio 190

9.1 LOG PCM CODEC 190

9.2 CVSD CODEC 190

9.3 Error Handling 193

9.4 General Audio Requirements 193

10 List of Figures 194

11 List of Tables 197

Appendix A: General Audio Recommendations 198

Appendix B: Timers 201

Appendix C: Recommendations for AFH Operation in Park, Hold, and Sniff 203

Part C

LINK MANAGER PROTOCOL SPECIFICATION

Contents 207

1 Introduction 209

2 General Rules 210

2.1 Message Transport 210

2.2 Synchronization 210

2.3 Packet Format 211

2.4 Transactions 212

2.5 Error Handling 213

2.6 Procedure Rules 214

2.7 General Response Messages 215

2.8 LMP Message Constraints 215

3 Device Features 216

3.1 General Description 216

3.2 Feature Definitions 216

3.3 Feature Mask Definition 222

3.4 Link Manager Interoperability policy 224

4 Procedure Rules 225

4.1 Connection Control 225

4.2 Security 244

4.3 Informational Requests 272

4.4 Role Switch 278

4.5 Modes of Operation 281

4.6 Logical Transports 294

4.7 Test Mode 302

5 Summary 307

5.1 PDU Summary 307

5.2 Parameter Definitions 317
5.3 LMP Encapsulated 328
5.4 Default Values 329

6 List of Figures 330

7 List of Tables 334

Part D
ERROR CODES

Contents 337

1 Overview of Error Codes 339
1.1 Usage Descriptions 339
1.2 HCI Command Errors 339
1.3 List of Error Codes 340

2 Error Code Descriptions 342
2.1 Unknown HCI Command (0X01) 342
2.2 Unknown Connection Identifier (0X02) 342
2.3 Hardware Failure (0X03) 342
2.4 Page Timeout (0X04) 342
2.5 Authentication Failure (0X05) 342
2.6 PIN or key Missing (0X06) 342
2.7 Memory Capacity Exceeded (0X07) 342
2.8 Connection Timeout (0X08) 343
2.9 Connection Limit Exceeded (0X09) 343
2.10 Synchronous Connection Limit to a Device Exceeded (0X0A) 343
2.11 ACL Connection Already Exists (0X0B) 343
2.12 Command Disallowed (0X0C) 343
2.13 Connection Rejected due to Limited Resources (0X0D) 343
2.14 Connection Rejected due to Security Reasons (0X0E) 343
2.15 Connection Rejected due to Unacceptable BD_ADDR (0X0F) 344
2.16 Connection Accept Timeout Exceeded (0X10) 344
2.17 Unsupported Feature or Parameter Value (0X11) 344
2.18 Invalid HCI Command Parameters (0X12) 344
2.19 Remote User Terminated Connection (0X13) 344
2.20 Remote Device Terminated Connection due to Low Resources (0X14) 345
2.21 Remote Device Terminated Connection due to Power Off (0X15) 345
2.22 Connection Terminated by Local Host (0X16) 345
2.23 Repeated Attempts (0X17) 345
2.24 Pairing not Allowed (0X18) 345
2.25 Unknown LMP PDU (0X19) 345

2.26 Unsupported Remote Feature / Unsupported LMP Feature (0X1A) 345
2.27 SCO Offset Rejected (0X1B) 345
2.28 SCO Interval Rejected (0X1C) 346
2.29 SCO Air Mode Rejected (0X1D) 346
2.30 Invalid LMP Parameters (0X1E) 346
2.31 Unspecified Error (0X1F) 346
2.32 Unsupported LMP Parameter Value (0X20) 346
2.33 Role Change Not Allowed (0X21) 346
2.34 LMP Response Timeout (0X22) 346
2.35 LMP Error Transaction Collision (0X23) 347
2.36 LMP PDU Not Allowed (0X24) 347
2.37 Encryption Mode Not Acceptable (0X25) 347
2.38 Link Key Can Not be Changed (0X26) 347
2.39 Requested QoS Not Supported (0X27) 347
2.40 Instant Passed (0X28) 347
2.41 Pairing with Unit Key Not Supported (0X29) 347
2.42 Different Transaction Collision (0x2A) 347
2.43 QoS Unacceptable Parameter (0X2C) 347
2.44 QoS Rejected (0X2D) 348
2.45 Channel Assessment Not Supported (0X2E) 348
2.46 Insufficient Security (0X2F) 348
2.47 Parameter out of Mandatory Range (0X30) 348
2.48 Role Switch Pending (0X32) 348
2.49 Reserved Slot Violation (0X34) 348
2.50 Role Switch Failed (0X35) 348
2.51 Extended Inquiry Response Too Large (0x36) 348
2.52 Simple Pairing Not Supported By Host (0X37) 349
2.53 Host Busy–Pairing(0X38) 349
2.54 Connection Rejected Due To No Suitable Channel Found (0X39) 349
2.55 Controller Busy (0X3A) 349

Part E
HOST CONTROLLER INTERFACE FUNCTIONAL SPECIFICATION

Contents 353
1 Introduction 362
1.1 Lower Layers of the Bluetooth Software Stack 362
2 Overview of Host Controller Transport Layer 364
2.1 Host Controller Transport Layer and AMPS 364
3 Overview of Commands and Events 365
3.1 Generic Events 366

3.2 Device Setup 366
3.3 Controller Flow Control 367
3.4 Controller Information 368
3.5 Controller Configuration 369
3.6 Device Discovery 372
3.7 Connection Setup 374
3.8 Remote Information 379
3.9 Synchronous Connections 380
3.10 Connection State 381
3.11 Piconet Structure 383
3.12 Quality of Service 384
3.13 Physical Links 386
3.14 Host Flow Control 388
3.15 Link Information 389
3.16 Authentication and Encryption 390
3.17 Testing 394
3.18 Alphabetical List of Commands and Events 397

4 HCI Flow Control 404
4.1 Host to Controller Data Flow Control 404
4.2 Controller to Host Data Flow Control 406
4.3 Disconnection Behavior 407
4.4 Command Flow Control 407
4.5 Command Error Handling 408

5 HCI Data Formats 409
5.1 Introduction 409
5.2 Data and Parameter Formats 409
5.3 Handles 410
5.4 Exchange of HCI-Specific Information 412

6 HCI Configuration Parameters 419
6.1 Scan Enable 419
6.2 Inquiry Scan Interval 419
6.3 Inquiry Scan Window 420
6.4 Inquiry Scan Type 420
6.5 Inquiry Mode 420
6.6 Page Timeout 421
6.7 Connection Accept Timeout 421
6.8 Page Scan Interval 422
6.9 Page Scan Window 422
6.10 Page Scan Period Mode (Deprecated) 422
6.11 Page Scan Type 423
6.12 Voice Setting 423
6.13 PIN Type 424

6.14 Link Key 424
6.15 Failed Contact Counter 424
6.16 Hold Mode Activity 425
6.17 Link Policy Settings 426
6.18 Flush Timeout 427
6.19 Num Broadcast Retransmissions 427
6.20 Link Supervision Timeout 428
6.21 Synchronous Flow Control Enable 428
6.22 Local Name 429
6.23 Extended Inquiry Response 429
6.24 Erroneous Data Reporting 429
6.25 Class Of Device 430
6.26 Supported Commands 430
6.27 Logical Link Accept Timeout 436
6.28 Location Domain Aware 437
6.29 Location Domain 437
6.30 Location Domain Options 437
6.31 Location Options 438
6.32 Flow Control Mode 438

7 HCI Commands and Events 439
7.1 Link Control Commands 439
7.2 Link Policy Commands 503
7.3 Controller & Baseband Commands 524
7.4 Informational Parameters 615
7.5 Status Parameters 624
7.6 Testing Commands 644
7.7 Events 654

8 List of Figures 721

9 List of Tables 722

10 Appendix A: Deprecated Commands, Events and Configuration Parameters 723
10.1 Read Page Scan Mode Command 724
10.2 Write Page Scan Mode Command 725
10.3 Read Page Scan Period Mode Command 726
10.4 Write Page Scan Period Mode Command 727
10.5 Add SCO Connection Command 728
10.6 Page Scan Mode Change Event 730
10.7 Read Country Code Command 731
10.8 Read Encryption Mode Command 732
10.9 Write Encryption Mode Command 732
10.10 Deprecated Parameters 733

Part F
MESSAGE SEQUENCE CHARTS

Contents 737

1 Introduction 739
1.1 Notation 739
1.2 Flow of Control 740
1.3 Example MSC 740

2 Services Without Connection Request 741
2.1 Remote Name Request 741
2.2 One-time Inquiry 743
2.3 Periodic Inquiry 745

3 ACL Connection Establishment and Detachment 747
3.1 Connection Setup 748

4 Optional Activities After ACL Connection Establishment 755
4.1 Authentication Requested 755
4.2 Simple Pairing Message Sequence Charts 756
4.3 Link Supervision Timeout Changed Event 769
4.4 Set Connection Encryption 770
4.5 Change Connection Link Key 771
4.6 Change Connection Link Key with Encryption Pause and Resume 771
4.7 Master Link Key 773
4.8 Read Remote Supported Features 775
4.9 Read Remote Extended Features 775
4.10 Read Clock Offset 776
4.11 Role Switch on an Encrypted Link using Encryption Pause and Resume 776
4.12 Refreshing Encryption Keys 777
4.13 Read Remote Version Information 778
4.14 QOS Setup 778
4.15 Switch Role 779
4.16 AMP Physical Link Creation and Disconnect 780
4.17 AMP Test Mode Sequence Charts 787

5 Synchronous Connection Establishment and Detachment 791
5.1 Synchronous Connection Setup 791

6 Sniff, Hold and Park 796
6.1 Sniff Mode 796
6.2 Hold Mode 797
6.3 Park State 799

7 Buffer Management, Flow Control 802

8 Loopback Mode 804
8.1 Local Loopback Mode 804
8.2 Remote Loopback Mode 806
9 List of Figures 808

Part G
SAMPLE DATA

Contents 813
1 Encryption Sample Data 815
1.1 Generating Kc' from Kc, ... 815
1.2 First Set of Sample Data 818
1.3 Second Set of Sample Data 826
1.4 Third Set of Samples 834
1.5 Fourth Set of Samples 842
2 Frequency Hopping Sample Data 850
2.1 First set 851
2.2 Second set 857
2.3 Third set 863
3 Access Code Sample Data 869
4 HEC and Packet Header Sample Data 872
5 CRC Sample Data 873
6 Complete Sample Packets 874
6.1 Example of DH1 Packet 874
6.2 Example of DM1 Packet 875
7 Simple Pairing Sample Data 876
7.1 P-192 Sample Data 876
7.2 Hash Functions Sample Data 877
8 Whitening Sequence Sample Data 888
9 FEC Sample Data 891
10 Encryption Key Sample Data 892
10.1 Four Tests of E1 892
10.2 Four Tests of E21 897
10.3 Three Tests of E22 899
10.4 Tests of E22 With Pin Augmenting 901
10.5 Four Tests of E3 911

Part H
SECURITY SPECIFICATION

Contents 919

1 Security Overview 921
1.1 Pausing Encryption and Role Switch 922
1.2 Change Connection Link Keys 922
1.3 Periodically Refreshing Encryption Keys 922
2 Random Number Generation 923
3 Key Management 925
3.1 Key Types 925
3.2 Key Generation and Initialization 927
4 Encryption 934
4.1 Encryption Key Size Negotiation 935
4.2 Encryption of Broadcast Messages 935
4.3 Encryption Concept 936
4.4 Encryption Algorithm 937
4.5 LFSR Initialization 940
4.6 Key Stream Sequence 943
5 Authentication 944
5.1 Repeated Attempts 946
6 The Authentication And Key-Generating Functions 947
6.1 The Authentication Function E1 947
6.2 The Functions Ar and A'r 949
6.3 E2-Key Generation Function for Authentication 951
6.4 E3-Key Generation Function for Encryption 953
7 Secure Simple Pairing 954
7.1 Phase 1: Public Key Exchange 955
7.2 Phase 2: Authentication Stage 1 956
7.3 Phase 3: Authentication Stage 2 962
7.4 Phase 4: Link Key Calculation 963
7.5 Phase 5: LMP Authentication and Encryption 963
7.6 Elliptic Curve Definition 963
7.7 Cryptographic Function Definitions 964
8 AMP Security 970
8.1 Creation of the Initial Generic AMP Link Key 970
8.2 Creation of Dedicated AMP Link Keys 970
8.3 Debug Considerations 971
9 List of Figures 973

Specification Volume 3
Core System Package
[Host volume]

Contents 5

Part A
LOGICAL LINK CONTROL AND ADAPTATION PROTOCOL SPECIFICATION

Contents 21

1 Introduction 26
1.1 L2CAP Features 26
1.2 Assumptions 29
1.3 Scope 30
1.4 Terminology 30

2 General Operation 34
2.1 Channel Identifiers 34
2.2 Operation Between Devices 35
2.3 Operation Between Layers 36
2.4 Modes of Operation 37
2.5 Mapping Channels to Logical Links 39

3 Data Packet Format 40
3.1 Connection-oriented Channel in Basic L2CAP Mode 40
3.2 Connectionless Data Channel in Basic L2CAP Mode 41
3.3 Connection-oriented Channel in Retransmission/Flow Control/ Streaming Modes41

4 Signaling Packet Formats 50
4.1 Command Reject (code 0x01) 52
4.2 Connection Request (code 0x02) 53
4.3 Connection Response (code 0x03) 54
4.4 Configuration Request (code 0x04) 56
4.5 Configuration Response (code 0x05) 58
4.6 Disconnection Request (code 0x06) 60
4.7 Disconnection Response (code 0x07) 61
4.8 Echo Request (code 0x08) 62
4.9 Echo Response (code 0x09) 62
4.10 Information Request (code 0x0A) 62
4.11 Information Response (code 0x0B) 63
4.12 Extended Feature Mask 65
4.13 Fixed Channels Supported 65
4.14 Create Channel Request (code 0x0C) 66

4.15 Create Channel Response (code 0x0D) 67
4.16 Move Channel Request (code 0x0E) 68
4.17 Move Channel Response (code 0x0F)....69
4.18 Move Channel Confirmation (code 0x10)....70
4.19 Move Channel Confirmation Response (code 0x11)....71

5 Configuration Parameter Options....72
5.1 Maximum Transmission Unit (MTU)....72
5.2 Flush Timeout Option....74
5.3 Quality of Service (QoS) Option....75
5.4 Retransmission and Flow Control Option....78
5.5 Frame Check Sequence (FCS) Option....84
5.6 Extended Flow Specification Option....85
5.7 Extended Window Size Option....89

6 State Machine....91
6.1 General rules for the state machine:....91
6.2 Timers events....107

7 General Procedures....113
7.1 Configuration Process....113
7.2 Fragmentation and Recombination....118
7.3 Encapsulation of SDUs....119
7.4 Delivery of Erroneous L2CAP SDUs....123
7.5 Operation with Flushing For BR/EDR Controller....123
7.6 Connectionless Data Channel....124
7.7 Operation Collision Resolution....126
7.8 Aggregating Best Effort Extended Flow Specifications....126
7.9 Prioritizing Data over HCI....127
7.10 Supporting Extended Flow Specification for BR/EDR Controllers....128

8 Procedures for Flow Control and Retransmission....130
8.1 Information Retrieval....130
8.2 Function of PDU Types for Flow Control and Retransmission....130
8.3 Variables and Sequence Numbers....131
8.4 Retransmission Mode....135
8.5 Flow Control Mode....142
8.6 Enhanced Retransmission Mode....145
8.7 Streaming Mode....175

9 Procedure for AMP Channel Creation and Handling....177
9.1 Create Channel....177
9.2 Move Channel....180
9.3 Disconnect Channel....188

10 List of Figures....189

11 List of Tables 191
Appendix A: Configuration MSCs 193

Part B
SERVICE DISCOVERY PROTOCOL (SDP) SPECIFICATION

Contents 199

1 Introduction 201
1.1 General Description 201
1.2 Motivation 201
1.3 Requirements 201
1.4 Non-requirements and Deferred Requirements 202
1.5 Conventions 202

2 Overview 203
2.1 SDP Client-Server Interaction 203
2.2 Service Record 205
2.3 Service Attribute 206
2.4 Service Class 207
2.5 Searching for Services 208
2.6 Browsing for Services 209

3 Data Representation 212
3.1 Data Element 212
3.2 Data Element Type Descriptor 212
3.3 Data Element Size Descriptor 213
3.4 Data Element Examples 214

4 Protocol Description 215
4.1 Transfer Byte Order 215
4.2 Protocol Data Unit Format 215
4.3 Partial Responses and Continuation State 217
4.4 Error Handling 217
4.5 ServiceSearch Transaction 219
4.6 ServiceAttribute Transaction 222
4.7 ServiceSearchAttribute Transaction 225

5 Service Attribute Definitions 229
5.1 Universal Attribute Definitions 229
5.2 ServiceDiscoveryServer Service Class Attribute Definitions ... 238
5.3 BrowseGroupDescriptor Service Class Attribute Definitions ... 240

6 Security 242
Appendix A – Background Information 243
Appendix B – Example SDP Transactions 244

Part C
GENERIC ACCESS PROFILE

Contents **259**
Foreword **263**

1 Introduction **264**
1.1 Scope 264
1.2 Symbols and conventions 264

2 Profile overview **266**
2.1 Profile stack 266
2.2 Configurations and roles 266
2.3 User requirements and scenarios 267
2.4 Profile fundamentals 268
2.5 Conformance 268

3 User interface aspects **269**
3.1 The user interface level 269
3.2 Representation of Bluetooth parameters 269
3.3 Pairing 272

4 Modes **273**
4.1 Discoverability modes 273
4.2 Connectability modes 277
4.3 Bondable modes 279

5 Security Aspects **281**
5.1 Authentication 281
5.2 Security modes 282

6 Idle Mode Procedures **300**
6.1 General inquiry 300
6.2 Limited inquiry 301
6.3 Name discovery 303
6.4 Device discovery 304
6.5 Bonding 305

7 Establishment procedures **309**
7.1 Link establishment 309
7.2 Channel establishment 312
7.3 Connection establishment 314
7.4 Establishment of additional connection 315

8 Extended Inquiry Response Data Format **316**
8.1 EIR Data Type Definitions 317
8.2 Example Extended Inquiry Response 320

9 Definitions **322**
9.1 General definitions 322

9.2 Connection-related definitions 322
9.3 Device-related definitions 323
9.4 Procedure-related definitions 324
9.5 Security-related definitions 324

10 Appendix A (Normative): Timers and constants 326

11 Appendix B (Informative): Information Flows of Related Procedures 327

11.1 LMP-authentication 327
11.2 LMP-pairing 328
11.3 Service discovery 329

12 References 330

Part D
TEST SUPPORT

Contents 333

1 Test Methodology 335

1.1 BR/EDR Test Scenarios 335
1.2 AMP Test Scenarios 345
1.3 References 353

2 Test Control Interface (TCI) 354

2.1 Introduction 354
2.2 TCI Configurations 355
2.3 TCI Configuration and Usage 358

Part E
AMP MANAGER PROTOCOL SPECIFICATION

Contents 365

1 Introduction 366

1.1 General Description 366

2 General Operation 367

2.1 Basic Capabilities 367
2.2 AMP Manager Channel Over L2CAP 368
2.3 Using the AMP Manager Protocol 369
2.4 Controller IDs 371
2.5 Controller Types 371

3 Protocol Description 372

3.1 Packet Formats 372
3.2 AMP Command Reject (Code 0x01) 373
3.3 AMP Discover Request (Code 0x02) 374
3.4 AMP Discover Response (Code 0x03) 375

3.5 AMP Change Notify (Code 0x04) 379
3.6 AMP Change Response (Code 0x05) 379
3.7 AMP Get Info Request (Code 0x06) 380
3.8 AMP Get Info Response (Code 0x07) 380
3.9 AMP Get AMP Assoc Request (Code 0x08) 382
3.10 AMP Get AMP Assoc Response (Code 0x09) 383
3.11 AMP Create Physical Link Request (Code 0x0A) 384
3.12 AMP Create Physical Link Response (Code 0x0B) 385
3.13 AMP Disconnect Physical Link Request (Code 0x0C) 386
3.14 AMP Disconnect Physical Link Response (Code 0x0D) 387
3.15 Create Physical Link Collision Resolution 388
3.16 Response Timeout 388
3.17 Unexpected BR/EDR Physical Link Disconnect 389
Figures 390
Tables 391

Specification Volume 4
Host Controller Interface
[Transport Layer]

Contents **5**

Part A
UART TRANSPORT LAYER

Contents **11**
1 General **13**
2 Protocol **14**
3 RS232 Settings **15**
4 Error Recovery **16**

Part B
USB TRANSPORT LAYER

Contents **19**
1 Overview **21**
2 USB Endpoint Expectations **25**
2.1 Descriptor Overview 25
2.2 Control Endpoint Expectations 31
2.3 Bulk Endpoints Expectations 32
2.4 Interrupt Endpoint Expectations 33
2.5 Isochronous Endpoints Expectations 33
3 Class Code **34**
3.1 Bluetooth Codes 34
4 Device Firmware Upgrade **36**
5 Limitations **37**
5.1 Power Specific Limitations 37
5.2 Other Limitations 37
6 Bluetooth Composite Device Implementation **38**
6.1 Configurations 38
6.2 Using USB Interface Association Descriptors for a BR/EDR Controller Function38
6.3 Combined BR/EDR Controller Function and Single AMP Controller Function39
7 References **43**

Part C
SECURE DIGITAL (SD)
TRANSPORT LAYER

Contents **47**

1 Introduction **48**

2 Goals **49**
2.1 Hardware Goals 49
2.2 Software Goals 49
2.3 Configuration Goals 50
2.4 Configuration for Multiple Controllers 50

3 Physical Interface Documents **51**

4 Communication **52**
4.1 Overview 52

5 Appendix A - Acronyms and Abbreviations **53**

6 Appendix B - Related Documents **54**

7 Appendix C - Tests **55**
7.1 Test Suite Structure 55

Part D
THREE-WIRE UART TRANSPORT LAYER

Contents **59**

1 General **61**

2 Overview **62**

3 Slip Layer **63**
3.1 Encoding a Packet 63
3.2 Decoding a Packet 63

4 Packet Header **65**
4.1 Sequence Number 65
4.2 Acknowledge Number 66
4.3 Data Integrity Check Present 66
4.4 Reliable Packet 66
4.5 Packet Type 66
4.6 Payload Length 67
4.7 Packet Header Checksum 67

5 Data Integrity Check **68**
5.1 16 Bit CCITT-CRC 68

6 Reliable Packets **69**
6.1 Header Checksum Error 69
6.2 Slip Payload Length Error 69

6.3 Data Integrity Check Error 69
6.4 Out Of Sequence Packet Error 69
6.5 Acknowledgement 70
6.6 Resending Packets 70
6.7 Example Reliable Packet Flow 70

7 Unreliable Packets 73
7.1 Unreliable Packet Header 73
7.2 Unreliable Packet Error 73

8 Link Establishment 74
8.1 Uninitialized State 75
8.2 Initialized State 75
8.3 Active State 75
8.4 Sync Message 76
8.5 Sync Response Message 76
8.6 Config Message 76
8.7 Config Response Message 77
8.8 Configuration Field 77

9 LOW POWER 80
9.1 Wakeup Message 80
9.2 Woken Message 80
9.3 Sleep Message 81

10 Out of Frame Control 82
10.1 Software Flow Control 82

11 Hardware Configuration 83
11.1 Wires 83
11.2 Hardware Flow 83

12 Recommended Parameters 84
12.1 Timing Parameters 84

13 References 85

Specification Volume 5
Core System Package [AMP Controller Volume]

Part A
802.11 PROTOCOL ADAPTATION LAYER FUNCTIONAL SPECIFICATION

Contents 13

1 Introduction 16
1.1 Organization of the 802.11 PAL 16

2 AMP Host Controller Interface 18
2.1 Read Local Version Information Command 18
2.2 Read Local Amp Info Command 18
2.3 Reset Command 20
2.4 Read Failed Contact Counter Command 21
2.5 Read Link Quality Command 21
2.6 Read RSSI Command 21
2.7 Short Range Mode Command 21
2.8 Write Best Effort Flush Timeout Command 22
2.9 Read Best Effort Flush Timeout Command 22
2.10 Physical Link Loss Early Warning Event 22
2.11 Physical Link Recovery Event 23
2.12 Channel Selected Event 23
2.13 Short Range Mode Change Completed Event 23
2.14 Data Structures 23
2.15 Connection Accept Timeout Configuration Parameter 27

3 Physical Link Manager 28
3.1 Physical Link State Machine 28
3.2 Channel Selection 36
3.3 802.11 Link Creation 39
3.4 Physical Link Maintenance 41
3.5 Physical Link Security 42
3.6 Physical Link Support for QOS 44

4 Logical Link Manager 45
4.1 Logical Link Creation 45
4.2 Logical Link Updates 46
4.3 Logical Link Deletion 47

5 Data Manager 48
5.1 Encapsulation 48
5.2 Coexistence and Local Interference 49
5.3 Explicit Flush 52
5.4 Automatic Flush 52

5.5 Quality Of Service Violations 52
6 Constants 53
7 Message Sequence Charts 54
8 Appendix A: Test Support 55
8.1 AMP Test Command 55
8.2 AMP Start Test Event 58
8.3 AMP Test End Event 59
9 References 60
Figures 61
Tables 62

BLUETOOTH COMPLIANCE REQUIREMENTS

This document specifies the requirements for Bluetooth compliance.

CONTENTS

1 Introduction 37

2 Scope 38

3 Definitions 39

3.1 Types of Bluetooth Products 39

4 Core Configurations 41

4.1 Specification Naming Conventions 41

4.2 EDR Configurations 41

4.3 High Speed (HS) Configuration 42

1 INTRODUCTION

The Bluetooth Qualification Program Reference Document (PRD) is the primary reference document for the Bluetooth Qualification Program and defines its requirements, functions, and policies. The PRD is available on the Bluetooth Web site.

Passing the Bluetooth Qualification Process demonstrates a certain measure of compliance and interoperability, but because products are not tested for every aspect of this Bluetooth Specification, qualification does not guarantee compliance. Passing the Bluetooth Qualification Process only satisfies one condition of the license grant. The Member has the ultimate responsibility to ensure that the qualified product complies with this Bluetooth Specification and interoperates with other products.

2 SCOPE

This part of the specification defines some fundamental concepts used in the Bluetooth Qualification Program.

3 DEFINITIONS

Bluetooth Qualification Process – The process defined in the Bluetooth Qualification Program Reference Document (PRD) to qualify a design used in implementations of Bluetooth wireless technology.

Bluetooth Qualification Program – The Bluetooth Qualification Process together with other related requirements and processes.

3.1 TYPES OF BLUETOOTH PRODUCTS

Bluetooth Product – Any product containing an implementation of Bluetooth wireless technology. All Bluetooth Products shall be one of the following:

- Bluetooth End Product
- Bluetooth Host Subsystem Product
- Bluetooth Controller Subsystem Product
- Bluetooth Profile Subsystem Product
- Bluetooth Component Product
- Bluetooth Development Tool
- Bluetooth Test Equipment

Bluetooth End Product - An implementation of Bluetooth wireless technology that implements, at a minimum, all mandatory requirements in Radio, Baseband, Link Manager, Logical Link Control and Adaptation Protocol, Service Discovery Protocol and Generic Access Profile parts of the Specification.

Bluetooth Subsystem Product - An implementation of Bluetooth wireless technology that implements only a portion of the Specification, in compliance with such portion of the Specification, and in accordance with the mandatory requirements as defined herein. Bluetooth Subsystem Products can be qualified solely for distribution and the use of Bluetooth wireless technology in Bluetooth Subsystem Products require such Bluetooth Subsystem Products to be combined with a complementary Bluetooth End Product or one or more complementary Bluetooth Subsystem Products such that the resulting combination satisfies the requirements of a Bluetooth End Product. There are three types of Bluetooth Subsystem Products as defined below:

- *Bluetooth Host Subsystem Product* – A Bluetooth Subsystem Product containing, at a minimum, all the mandatory requirements defined in the Host Controller Interface, Logical Link Control and Adaptation Protocol, Service Discovery Protocol and Generic Access Profile parts of this Specification, but none of the protocols below Host Controller Interface (HCI). In addition, a Bluetooth Host Subsystem Product may contain, at a minimum, all the mandatory requirements defined in one or more of the protocols and profiles above HCI.

- *Bluetooth Controller Subsystem Product* – A Bluetooth Subsystem Product containing, at a minimum, all the mandatory requirements defined by the Bluetooth Radio, Baseband, Link Manager, HCI and optionally any of the AMP Protocol Adaptation Layer parts of this Specification, but none of the Protocols and Profiles above HCI.
- *Bluetooth Profile Subsystem Product* – A Bluetooth Subsystem Product containing, at a minimum, all the mandatory requirements defined in one or more of the profile specifications.

Bluetooth Component Product - An implementation of Bluetooth wireless technology, which does not meet the requirements of a Bluetooth End Product or Bluetooth Subsystem product, but implements, at a minimum, all the mandatory requirements, if any, of either one or more of any of the protocol and profile parts of the Specification in compliance with such portion of the Specification. Bluetooth Component Products can be qualified solely for distribution and the use of the Bluetooth wireless technology in Bluetooth Component Products require such Bluetooth Component Products to be incorporated in Bluetooth End Products or Bluetooth Subsystem Products.

Bluetooth Development Tool - An implementation of Bluetooth wireless technology, intended to facilitate the development of new Bluetooth designs. Bluetooth Development Tools can be qualified solely for distribution and the use of the Bluetooth wireless technology in development of new Bluetooth Products.

Bluetooth Test Equipment - An implementation of Bluetooth wireless technology, intended to facilitate the testing of new Bluetooth Products. Bluetooth Test Equipment can be qualified solely for distribution and the use of the Bluetooth wireless technology in testing of new Bluetooth Products. Where necessary, Bluetooth Test Equipment may deviate from the Specification in order to fulfill the test purposes in the Bluetooth Test Specifications.

4 CORE CONFIGURATIONS

This section defines the set of features that are required for a product to be qualified to a specification name. Specification names differ from Core Specification version numbers in that products are marked based on meeting requirements for a core configuration. The Core Specification version number is simply the version number of the specification itself.

Each core configuration is defined by a set of features and Parts of the Core Specification that shall be supported to allow the configuration name to be used. The configuration requirements imposed on a device depends on the profiles that it supports.

4.1 SPECIFICATION NAMING CONVENTIONS

Each specification is named by a number optionally followed by a list of the core configuration names that are implemented and qualified.

A product (end, sub-system or component) shall only use a specification name if it supports at least one new feature introduced in that specification version (see [Vol. 1] Part D, Section 1.1).

The following table shows the allowed specification names for each Core Specification version and required core configurations for each specification name.

Core Specification Version	Allowed Specification Names	Core Configurations Required
1.2	1.2	None
2.0 + EDR	2.0	None
	2.0 + EDR	EDR (see Section 4.2)
2.1 + EDR	2.1	None
	2.1 + EDR	EDR (see Section 4.2)
3.0 + HS	3.0	EDR (see Section 4.2) is optional
	3.0 + HS	EDR (see Section 4.2) AND High Speed (see Section 4.3)

4.2 EDR CONFIGURATIONS

This section specifies additional compliance requirements that shall be followed for the "EDR" core configuration.

Table 4.1 defines three categories of Transport Requirements that shall be satisfied subject to the following rules:

- A Bluetooth product shall support category 1 whenever it supports asynchronous transports for the profiles it incorporates.

- A Bluetooth product shall support category 2 whenever it supports asynchronous transports with multislot ACL packets for the profiles it incorporates.
- A Bluetooth product shall support category 3 whenever it supports eSCO synchronous transports for the profiles it incorporates.

A multi-profile product shall support all applicable categories in order to use the "+ EDR" configuration name.

Category No	Transport Requirements	LMP Feature Supported	L2CAP Feature Bits Required
1	EDR for asynchronous transports (single slot)	Enhanced Data Rate ACL 2 Mbps mode (25) AND Enhanced Data Rate ACL 3 Mbps mode (26)	None
2	EDR for asynchronous transports (multi-slot)	3-slot Enhanced Data Rate ACL packets (39) AND 5-slot Enhanced Data Rate ACL packets (40)	None
3	EDR for synchronous transports	Enhanced Data Rate eSCO 2 Mbps mode (45)	None

Table 4.1: EDR configuration requirements

Note: No additional requirements are stated on the support of 3-EV3, 2-EV5 and 3-EV5 packets.

4.3 HIGH SPEED (HS) CONFIGURATION

This section specifies additional compliance requirements that shall be followed for the high speed core configuration.

The following Core features shall be satisfied in order to claim support for the "high speed" core configuration.

Layer	Required Features
L2CAP	Enhanced Retransmission Mode (L2CAP extended features mask number 3) Fixed Channels (extended features mask number 7) AMP Manager Fixed Channel (CID 0x0003) AMP Channel Creation and Handling ([Vol. 3] Part A, Section 9)
A2MP	All mandatory features
802.11 PAL	All mandatory features

APPENDIX

CONTENTS

1 Revision History 47
1.1 [Vol 0] Master TOC & Compliance Requirements 47
1.1.1 Bluetooth Compliance Requirements 47
1.2 [Vol 1] Architecture & Terminology Overview 47
1.3 [Vol 2 & 3] Core System Package 49
1.4 [Vol 4] Transport Layers 52
2 Contributors 53
2.1 [Vol 0] Master TOC & Compliance Requirements 53
2.1.1 Part B: Bluetooth Compliance Requirements 53
2.2 [Vol 1] Architecture &Terminology Overview 53
2.2.1 Part A: Architectural Overview 53
2.2.2 Part B: Acronyms & Abbreviations 54
2.2.3 Part C: Core Specification Change History 55
2.2.4 Part D: Mixing of Specification Versions 55
2.3 [Vol 2] Core System Package, Controller 57
2.3.1 Part A: Radio Specification 57
2.3.2 Part B: Baseband Specification 58
2.3.3 Part C: Link Manager Protocol 61
2.3.4 Part D: Error Codes 64
2.3.5 Part E: Bluetooth Host Controller Interface Functional Specification 65
2.3.6 Part F: Message Sequence Charts 68
2.3.7 Part G: Sample Data 70
2.3.8 Part H: Security Specification 71
2.4 [Vol 3] Core System Package, Host 73
2.4.1 Part A: Logical Link Control and Adaptation Protocol Specification 73
2.4.2 Part B: Service Discovery Protocol (SDP) 75
2.4.3 Part C: Generic Access Profile 76
2.4.4 Part D: Test Support 77
2.4.5 Part E: AMP Manager Protocol 78
2.5 [Vol 4] Host Controller Interface [Transport Layer] 79
2.6 [Vol 5] Core System Package [AMP Controller Volume] 80
2.6.1 Part A: 802.11 PAL 80

1 REVISION HISTORY

Public versions are marked with bold in the tables below.

Beginning with v1.2 of the Core System Package the core Bluetooth specification documents, protocols and profiles, were transferred to a new partitioning comprising volumes and individual profile specifications are each contained in an individual document instead of the two volumes (Core and Profiles) used in v1.1.

For more detailed information about changes between versions published before v1.2, please see the Appendix I “Revision History” in v1.1.

1.1 [VOL 0] MASTER TOC & COMPLIANCE REQUIREMENTS

1.1.1 Bluetooth Compliance Requirements

Rev	Date	Comments
3.0 + HS	April 21 2009	Updated to include support for the Alternative MAC/PHY feature and High Speed core configuration.
v2.1 + EDR	July 26 2007	No content changes. Updates to the Table of Contents.
v2.0 + EDR	Oct 15 2004	This version of the specification is intended to be a separate Bluetooth Specification that has all the functional characteristics of the v1.2 Bluetooth Specification that adds the Enhanced Data Rate (EDR) feature which required changes to Volume 0, Part A, Master Table of Contents.
v1.2	Nov 05 2003	This Part was moved from the Core volume. No content changes been made to this document since v1.1

1.2 [VOL 1] ARCHITECTURE & TERMINOLOGY OVERVIEW

Rev	Date	Comments
3.0 + HS	April 21 2009	Updated to integrate the Alternate MAC/PHY and Unicast Connectionless Data features.
v2.1 + EDR	July 26 2007	Added definitions for new features: Encryption Pause Resume, Erroneous Data reporting, Extended Inquiry Response, Link Supervision Timeout Event, Packet Boundary Flag, Secure Simple Pairing, Sniff Subrating
v2.0 + EDR	Oct 15 2004	This version of the specification is intended to be a separate Bluetooth Specification that has all the functional characteristics of the v1.2 Bluetooth Specification that adds the Enhanced Data Rate (EDR) feature which incorporates changes to Volume 1, Part B, Acronyms and Abbreviations.

Rev	Date	Comments
v1.2	Nov 05 2003	New volume with informational content. This volume will always be updated in parallel with the Core System volumes

1.3 [VOL 2 & 3] CORE SYSTEM PACKAGE

Rev	Date	Comments
3.0 + HS	April 21 2009	• New features added in 3.0 + HS: -AMP Manager Protocol (A2MP) -Enhancements to L2CAP for AMP -Enhancements to HCI for AMP -Enhancements to Security for AMP -802.11 Protocol Adaptation Layer -Enhanced Power Control -Unicast Connectionless Data -HCI Read Encryption Key Size command -Generic Test Methodology for AMP -Enhanced USB and SDIO HCI Transports • Errata for v 2.0 + EDR and v2.1 + EDR
v2.1 + EDR	July 26 2007	• New features added in 2.1 + EDR: -Encryption Pause and Resume -Erroneous Data Reporting -Extended Inquiry Response -Link Supervision Timeout Changed Event -Non-Flushable Packet Boundary Flag -Secure Simple Pairing -Sniff Subrating -Security Mode 4 • Updates to IEEE language in Volume 2, Part H, Security • Errata for v2.0 + EDR
v2.0 + EDR	Aug 01 2004	This version of the specification is intended to be a separate Bluetooth Specification. This specification was created by adding EDR and the errata.

Rev	Date	Comments
v1.2	Nov 05 2003	New features added in v1.2: - Architectural overview - Faster connection - Adaptive frequency hopping - Extended SCO links - Enhanced error detection and flow control - Enhanced synchronization capability - Enhanced flow specification The Core System Package now comprises two volumes and the text has gone through a radical change both in terms of structure and nomenclature. The language is also more precise and is adapted to meet the IEEE standard. The following parts are moved from the Core System Package to other volumes or were deprecated: RFCOMM [vol 7], Object Exchange (IrDA Interoperability) [vol 8], TCS [vol 9], Interoperability Requirements for Bluetooth as a WAP Bearer [vol 6], HCI USB Transport Layer [vol4], HCI RS232 Transport Layer [vol 4], HCI UART Transport Layer [vol 4], Bluetooth Compliance Requirements [vol 0], Optional Paging Schemes [deprecated]
1.1	Feb 22 2001	The specification was updated with Errata items previously published on the web site. The Bluetooth Assigned Numbers appendix was lifted out from the specification to allow continuous maintenance on the web site.
1.0B	Dec. 1 1999	The specification was updated with Errata items previously published on the web site and was revised from a linguistic point of view. The following parts were added: Interoperability Requirements for Bluetooth as a WAP Bearer, Test Control Interface, Sample Data (appendix), Bluetooth Audio (appendix), Baseband Timers (appendix) and Optional Paging Scheme (appendix)
1.0a	July 26 1999	The first version of the Bluetooth Specification published on the public web site. Added part: Bluetooth Compliance Requirements.
1.0 draft	July 05 1999	The following parts were added: Service Discovery Protocol (SDP), Telephony Control Specification (TCS), Bluetooth Assigned Numbers (appendix) and Message Sequence Charts (appendix)
0.9	April 30 1999	The following parts were added: IrDA Interoperability, HCI RS232 Transport Layer, HCI UART Transport Layer and Test Mode

Rev	Date	Comments
0.8	Jan 21 1999	The following parts were added: Radio Specification, L2CAP, RFCOMM, HCI & HCI USB Transport Layer
0.7	Oct 19 1998	This first version only included Baseband and Link Manager Protocol

1.4 [VOL 4] TRANSPORT LAYERS

Rev	Date	Comments
3.0 + HS	April 21 2009	Updated the USB and SDIO HCI Transport protocols for high speed, support composite BR/EDR + AMP devices, and to include errata.
v2.1 + EDR	July 26 2007	Added this volume to the specification

2 CONTRIBUTORS

2.1 [VOL 0] MASTER TOC & COMPLIANCE REQUIREMENTS

2.1.1 Part B: Bluetooth Compliance Requirements

BQRB (Editor)	
Wayne Park	3Com Corporation
Lawrence Jones	ComBit, Inc.
Gary Robinson	IBM Corporation
Georges Seuron	IBM Corporation
Rick Jessop	Intel Corporation
John Webb	Intel Corporation
Bruce Littlefield	Lucent Technologies, Inc.
Brian A. Redding	Motorola, Inc.
Waldemar Hontscha	Nokia Corporation
Petri Morko	Nokia Corporation
Joel Linksy	Qualcomm
Magnus Hansson	Telefonaktiebolaget LM Ericsson
Magnus Sommansson	Telefonaktiebolaget LM Ericsson
Göran Svennarp	Telefonaktiebolaget LM Ericsson
Warren Allen	Toshiba Corporation
John Shi	Toshiba Corporation

2.2 [VOL 1] ARCHITECTURE &TERMINOLOGY OVERVIEW

2.2.1 Part A: Architectural Overview

Ayse Findikli	Atheros
Robert Hulvey	Broadcom
Shawn Ding	Broadcom
Jennifer Bray	CSR
Robin Heydon	CSR
Henrik Hedlund	CSR
Simon Kingston	CSR
Steven Singer	CSR
Steven Wenham	CSR
Paul Wright	CSR
Martin van der Zee	Ericsson
David Suvak	iAnywhere
Mattias Edlund	Infineon
Penny Chen	Intel
Selim Aissi	Intel
Josh Benaloh	Microsoft
Andy Glass	Microsoft

Peter Hauser	Microsoft
Joby Lafky	Microsoft
Kristin Lauter	Microsoft
Dan Simon	Microsoft
Don Stanwyck	Microsoft
Yacov Yacobi	Microsoft
Gideon Yuval	Microsoft
Greg Muchnik	Motorola
Brian Redding	Motorola
N Asokan	Nokia
Philip Ginzboorg	Nokia
Kanji Kerai	Nokia
Noel Lobo	Nokia
Thomas Müller	Nokia
Kaisa Nyberg	Nokia
Arto Palin	Nokia
Päivi Ruuska	Nokia
Jürgen Schnitzler	Nokia
Dominique Everaere	NXP
Javier del Prado Pavon	NXP
Reinhard Meindl	NXP
Joel Linsky	Qualcomm
Terry Bourk	Qualcomm
Guido Bertoni	ST
Jorgen van Parijs	ST
Dominique Everaere	ST-NXP Wireless
Tim Howes	Symbian
Michael Hasling	Tality
Amihai Kidron	Texas Instruments
Eran Reuveni	Texas Instruments
Yoshimitsu Shimojo	Toshiba
John Mersh	TTPCom

2.2.2 Part B: Acronyms & Abbreviations

Dan Sönnerstam	Pyramid Communication AB
Steve Koester	Bluetooth SIG, Inc.

2.2.3 Part C: Core Specification Change History

Tom Siep	Bluetooth SIG Inc.
Robert Hulvey	Broadcom
Shawn Ding	Broadcom
Robin Heydon	CSR
Henrik Hedlund	CSR
Steven Singer	CSR
Paul Wright	CSR
David Suvak	iAnywhere
Mattias Edlund	Infineon
Rob Davies	Philips
Peter Hauser	Microsoft
Joel Linsky	Qualcomm
Terry Bourk	Qualcomm
Päivi Ruuska	Nokia
Arto Palin	Nokia
Dominique Everaere	NXP
Javier del Prado Pavon	NXP
Jorgen van Parijs	ST
Tim Howes	Symbian
Amihai Kidron	Texas Instruments
Eran Reuveni	Texas Instruments
Yoshimitsu Shimojo	Toshiba
John Mersh	TTPCom

2.2.4 Part D: Mixing of Specification Versions

David Suvak	iAnywhere
Robert Hulvey	Broadcom
Shawn Ding	Broadcom
Dave Suvak	iAnywhere
Mattias Edlund	Infineon
Joel Linsky	Qualcomm
Terry Bourk	Qualcomm
Joe Decuir	CSR
Robin Heydon	CSR
Steven Singer	CSR
Peter Hauser	Microsoft
Päivi Ruuska	Nokia
Arto Palin	Nokia
Dominique Everaere	NXP
Javier del Prado Pavon	NXP
Leonard Ott	Socket Communications
Jorgen van Parijs	ST
Tim Howes	Symbian
Amihai Kidron	Texas Instruments

Eran Reuveni	Texas Instruments
Shimojo Yoshimitsu	Toshiba

2.3 [VOL 2] CORE SYSTEM PACKAGE, CONTROLLER

2.3.1 Part A: Radio Specification

Version 3.0 + HS

Phil Hough	Anritsu
Edward Harrison	Anritsu
Robert Hulvey	Broadcom
Shawn Ding	Broadcom
Mark Braun	Motorola
Joel Linsky	Qualcomm
Eran Reuveni	TI

Version 2.0 + EDR

Steven Hall	RF Micro Devices
Robert Young	CSR
Robert Kokke	Ericsson
Harald Kafemann	Nokia
Jukka Reunamäki	Nokia
Morton Gade	Digianswer
Mike Fitton	Toshiba
Oren Eliezer	Texas Instruments
Stephane Laurent-Michel	Tality

Version 1.2

Tom Siep	Bluetooth SIG Inc.
Jennifer Bray	CSR
Robin Heydon	CSR
Morten Gade	Digianswer/Motorola
Henrik Hedlund	Ericsson
Stefan Agnani	Ericsson
Robert Kokke	Ericsson
Roland Hellfajer	Infineon
Thomas Müller	Nokia
Antonio Salloum	Philips
Joel Linsky	Silicon Wave
Steven Hall	Silicon Wave
Oren Eliezer	Texas Instruments
Mike Fitton	Toshiba

Previous versions

Steve Williams	3Com Corporation
Todor V. Cooklov	Aware
Poul Hove Kristensen	Digianswer A/S

Kurt B. Fischer	Hyper Corporation
Kevin D. Marquess	Hyper Corporation
Troy Beukema	IBM Corporation
Brian Gaucher	IBM Corporation
Jeff Schiffer	Intel Corporation
James P. Gilb	Mobilian
Rich L. Ditch	Motorola, Inc.
Paul Burgess	Nokia Corporation
Olaf Joeressen	Nokia Corporation
Thomas Müller	Nokia Corporation
Arto T. Palin	Nokia Corporation
Steven J. Shellhammer	Symbol
Sven Mattisson	Telefonaktiebolaget LM Ericsson
Lars Nord (Section Owner)	Telefonaktiebolaget LM Ericsson
Anders Svensson	Telefonaktiebolaget LM Ericsson
Mary A. DuVal	Texas Instruments
Allen Hotari	Toshiba Corporation

2.3.2 Part B: Baseband Specification

Version 2.1 + EDR

Ayse Findikli	Atheros
Robert Hulvey	Broadcom
Shawn Ding	Broadcom
Robin Heydon	CSR
Simon Kingston	CSR
Steven Singer	CSR
Steven Wenham	CSR
Paul Wright	CSR
Dave Suvak	iAnywhere
Mattias Edlund	Infineon
Selim Aissi	Intel
Penny Chen	Intel
Oren Haggai	Intel
Josh Benaloh	Microsoft
Andy Glass	Microsoft
Peter Hauser	Microsoft
Joby Lafky	Microsoft
Kristin Lauter	Microsoft
Dan Simon	Microsoft
Don Stanwyck	Microsoft
Yacov Yacobi	Microsoft
Gideon Yuval	Microsoft
Greg Muchnik	Motorola
N Asokan	Nokia

Philip Ginzboorg	Nokia
Kanji Kerai	Nokia
Noel Lobo	Nokia
Kaisa Nyberg	Nokia
Arto Palin	Nokia
Päivi Ruuska	Nokia
Joel Linsky	Qualcomm
Terry Bourk	Qualcomm
Dominique Everaere	NXP
Javier del Prado Pavon	NXP
Reinhard Meindl	NXP
Jorgen van Parijs	ST
Guido Bertoni	ST
Tim Howes	Symbian
Amihai Kidron	Texas Instruments
Eran Reuveni	Texas Instruments
Yoshimitsu Shimojo	Toshiba

Version 2.0 + EDR

Steven Hall	RF Micro Devices
Robert Young	CSR
Robert Kokke	Ericsson
Harald Kafemann	Nokia
Joel Linsky	RF Micro Devices
Terry Bourk	RF Micro Devices
Arto Palin	Nokia

Version 1.2

P G Madhavan	Agere
Hongbing Gan	Bandspeed, Inc.
Tod Sizer	Bell Labs
Alexander Thoukydides	CSR
Jennifer Bray	CSR
Robin Heydon	CSR
Kim Schneider	Digianswer/Motorola
Knud Dyring-Olsen	Digianswer/Motorola
Niels Nielsen	Digianswer/Motorola
Henrik Andersen	Digianswer/Motorola
Christian Gehrmann	Ericsson
Henrik Hedlund	Ericsson
Jan Åberg	Ericsson
Martin van der Zee	Ericsson
Rakesh Taori	Ericsson
Jaap Haartsen	Ericsson
Stefan Zürbes	Ericsson

Roland Hellfajer	Infineon
YC Maa	Integrated Programmable Communications, Inc.
HungKun Chen	Integrated Programmable Communications, Inc.
Steve McGowan	Intel
Adrian Stephens	Mobilian Corporation
Jim Lansford	Mobilian Corporation
Eric Meihofer	Motorola
Arto Palin	Nokia
Carmen Kühl	Nokia
Hannu Laine	Nokia
Jürgen Schnitzler	Nokia
Päivi Ruuska	Nokia
Thomas Müller	Nokia
Antonio Salloum	Philips
Harmke de Groot	Philips
Marianne van de Casteelee	Philips
Rob Davies	Philips
Roland Matthijssen	Philips
Joel Linsky (section owner)	Silicon Wave
Terry Bourk	Silicon Wave
Gary Schneider	Symbol Technologies, Inc.
Stephen J. Shellhammer	Symbol Technologies, Inc.
Michael Hasling	Tality
Amihai Kidron	Texas Instruments
Dan Michael	Texas Instruments
Eli Dekel	Texas Instruments
Jie Liang	Texas Instruments
Oren Eliezer	Texas Instruments
Tally Shina	Texas Instruments
Yariv Raveh	Texas Instruments
Anuj Batra	Texas Instruments
Katsuhiro Kinoshita	Toshiba
Toshiki Kizu	Toshiba
Yoshimitsu Shimojo	Toshiba
Charles Sturman	TTPCom
John Mersh	TTPCom
Sam Turner	TTPCom
Christoph Scholtz	University of Bonn
Simon Baatz	University of Bonn

Previous versions

Kevin D. Marquess	Hyper Corporation
Chatschik Bisdikian	IBM Corporation
Kris Fleming	Intel Corporation
James P. Gilb	Mobilian

David E. Cypher	NIST
Nada Golmie	NIST
Olaf Joeressen	Nokia Corporation
Thomas Müller	Nokia Corporation
Charlie Mellone	Motorola, Inc.
Harmke de Groot	Philips
Terry Bourk	Silicon Wave
Steven J. Shellhammer	Symbol
Jaap Haartsen	Telefonaktiebolaget LM Ericsson
Henrik Hedlund (Section Owner)	Telefonaktiebolaget LM Ericsson
Tobias Melin	Telefonaktiebolaget LM Ericsson
Joakim Persson	Telefonaktiebolaget LM Ericsson
Mary A. DuVal	Texas Instruments
Onn Haran	Texas Instruments
Thomas M. Siep	Texas Instruments
Ayse Findikli	Zeevo, Inc.

Previous versions [Encryption Sample Data, appendix]

Joel Linksy	RFMD
Thomas Müller	Nokia Corporation
Thomas Sander	Nokia Corporation
Joakim Persson (Section Owner)	Telefonaktiebolaget LM Ericsson

Previous versions [Bluetooth Audio, appendix]

Magnus Hansson	Telefonaktiebolaget LM Ericsson
Fisseha Mekuria	Telefonaktiebolaget LM Ericsson
Mats Omrin	Telefonaktiebolaget LM Ericsson
Joakim Persson (Section Owner)	Telefonaktiebolaget LM Ericsson

Previous versions [Baseband Timers, appendix]

David E. Cyper	NIST
Jaap Haartsen (Section Owner)	Telefonaktiebolaget LM Ericsson
Joakim Persson	Telefonaktiebolaget LM Ericsson
Ayse Findikli	Zeevo, Inc.

2.3.3 Part C: Link Manager Protocol

Version 3.0 + HS

Phil Hough	Anritsu
Edward Harrison	Anritsu
Shawn Ding	Broadcom
Robert Hulvey	Broadcom
Mark Braun	Motorola
Joel Linsky	Qualcomm
Eran Reuveni	TI

Version 2.1 + EDR

P G Madhavan	Agere
Ayse Findikli	Atheros
Robert Hulvey	Broadcom
Shawn Ding	Broadcom
Robin Heydon	CSR
Henrik Hedlund	CSR
Simon Kingston	CSR
Steven Singer	CSR
Steven Wenham	CSR
Paul Wright	CSR
Dave Suvak	iAnywhere
Selim Aissi	Intel
Penny Chen	Intel
Mattias Edlund	Infineon
Josh Benaloh	Microsoft
Andy Glass	Microsoft
Peter Hauser	Microsoft
Joby Lafky	Microsoft
Kristin Lauter	Microsoft
Dan Simon	Microsoft
Don Stanwyck	Microsoft
Yacov Yacobi	Microsoft
Gideon Yuval	Microsoft
Peter Hauser	Microsoft
Greg Muchnik	Motorola
N Asokan	Nokia
Philip Ginzboorg	Nokia
Kanji Kerai	Nokia
Noel Lobo	Nokia
Kaisa Nyberg	Nokia
Arto Palin	Nokia
Päivi Ruuska	Nokia
Joel Linsky	Qualcomm
Terry Bourk	Qualcomm
Dominique Everaere	NXP
Javier del Prado Pavon	NXP
Reinhard Meindl	NXP
Jorgen van Parijs	ST
Guido Bertoni	ST
Tim Howes	Symbian
Amihai Kidron	Texas Instruments
Eran Reuveni	Texas Instruments
Shimojo Yoshimitsu	Toshiba

Version 2.0 + EDR

John Mersh	TTPCom Ltd.
Joel Linsky	RF Micro Devices
Harald Kafemann	Nokia
Simon Morris	CSR

Version 1.2

Jennifer Bray	CSR
Robin Heydon	CSR
Simon Morris	CSR
Alexander Thoukydides	CSR
Kim Schneider	Digianswer/Motorola
Knud Dyring-Olsen	Digianswer/Motorola
Henrik Andersen	Digianswer/Motorola
Jan Åberg	Ericsson
Martin van der Zee	Ericsson
Roland Hellfajer	Infineon
YC Maa	Integrated Programmable Communications, Inc.
Steve McGowan	Intel
Tod Sizer	Lucent Technologies
Adrian Stephens	Mobilian
Jürgen Schnitzler	Nokia
Thomas Müller	Nokia
Carmen Kuhl	Nokia
Arto Palin	Nokia
Thomas Müller	Nokia
Roland Matthijssen	Philips
Rob Davies	Philips
Harmke de Groot	Philips
Antonio Salloum	Philips
Joel Linsky	Silicon Wave
Terry Bourk	Silicon Wave
Yariv Raveh	Texas Instruments
Tally Shina	Texas Instruments
Amihai Kidron	Texas Instruments
Yoshimitsu Shimojo	Toshiba
Toshiki Kizu	Toshiba
John Mersh (section owner)	TTPCom
Sam Turner	TTPCom

Previous versions

Kim Schneider	Digianswer A/S
Toru Aihara	IBM Corporation
Chatschik Bisdikian	IBM Corporation
Kris Fleming	Intel Corporation

David E. Cypher	NIST
Thomas Busse	Nokia Corporation
Julien Corthial	Nokia Corporation
Olaf Joeressen	Nokia Corporation
Thomas Müller	Nokia Corporation
Dong Nguyen	Nokia Corporation
Harmke de Groot	Philips
Terry Bourk	Silicon Wave
Johannes Elg	Telefonaktiebolaget LM Ericsson
Jaap Haartsen	Telefonaktiebolaget LM Ericsson
Tobias Melin (Section Owner)	Telefonaktiebolaget LM Ericsson
Mary A. DuVal	Texas Instruments
Onn Haran	Texas Instruments
John Mersh	TTPCom

2.3.4 Part D: Error Codes

Version 3.0 + HS

Phil Hough	Anritsu
Kevin Hayes	Atheros
Stratos Chatzikyriakos	Artimi
Shawn Ding	Broadcom
Joe Decuir	CSR
David Suvak	iAnywhere
Koen Derom	NXP Semiconductors
Joel Linsky	Qualcomm
Krishnan Rajamani	Qualcomm
John Hillan	Qualcomm
Mayank Sharma	SiRF
Jason Hillyard	Staccato Communications
William Stoye	Staccato Communications

Version 2.1 + EDR

Ayse Findikli	Atheros
Robert Hulvey	Broadcom
Shawn Ding	Broadcom
Robin Heydon	CSR
Simon Kingston	CSR
Steven Singer	CSR
Steven Wenham	CSR
Selim Aissi	Intel
Penny Chen	Intel
Mattias Edlund	Infineon
Josh Benaloh	Microsoft
Andy Glass	Microsoft

Peter Hauser	Microsoft
Joby Lafky	Microsoft
Kristin Lauter	Microsoft
Dan Simon	Microsoft
Don Stanwyck	Microsoft
Yacov Yacobi	Microsoft
Gideon Yuval	Microsoft
Greg Muchnik	Motorola
N Asokan	Nokia
Philip Ginzboorg	Nokia
Kanji Kerai	Nokia
Noel Lobo	Nokia
Kaisa Nyberg	Nokia
Arto Palin	Nokia
Päivi Ruuska	Nokia
Dominique Everaere	NXP
Reinhard Meindl	NXP
Joel Linsky	Qualcomm
Terry Bourk	Qualcomm
Guido Bertoni	ST
Eran Reuveni	Texas Instruments
Shimojo Yoshimitsu	Toshiba

Version 1.2

Robin Heydon (section owner)	CSR
Roland Hellfajer	Infineon
Joel Linsky	Silicon Wave
John Mersh	TTPCom

This part was earlier included in the LMP and HCI functional Specifications.

2.3.5 Part E: Bluetooth Host Controller Interface Functional Specification

Version 3.0 + HS

Phil Hough	Anritsu
Kevin Hayes	Atheros
Stratos Chatzikyriakos	Artimi
Angel Polo	Broadcom
Shawn Ding	Broadcom
Victor Zhodzishsky	Broadcom
Joe Decuir	CSR
David Suvak	iAnywhere
Dominique Everaere	ST-NXP Wireless
Yao Wang	IVT
Koen Derom	NXP Semiconductors

Ana Donezar Ibanez	Parrot
Joel Linsky	Qualcomm
John Hillan	Qualcomm
Krishnan Rajamani	Qualcomm
Mayank Sharma	SiRF
Jason Hillyard	Staccato Communications
William Stoye	Staccato Communications
Doug Clark	Symbian

Version 2.1 + EDR

Ayse Findikli	Atheros
Robert Hulvey	Broadcom
Shawn Ding	Broadcom
Henrik Hedlund	CSR
Robin Heydon	CSR
Simon Kingston	CSR
Steven Singer	CSR
Steven Wenham	CSR
Paul Wright	CSR
Mattias Edlund	Infineon
David Suvak	iAnywhere
Selim Aissi	Intel
Penny Chen	Intel
Josh Benaloh	Microsoft
Andy Glass	Microsoft
Peter Hauser	Microsoft
Joby Lafky	Microsoft
Kristin Lauter	Microsoft
Dan Simon	Microsoft
Don Stanwyck	Microsoft
Yacov Yacobi	Microsoft
Gideon Yuval	Microsoft
Greg Muchnik	Motorola
N Asokan	Nokia
Philip Ginzboorg	Nokia
Kanji Kerai	Nokia
Noel Lobo	Nokia
Kaisa Nyberg	Nokia
Arto Palin	Nokia
Päivi Ruuska	Nokia
Dominique Everaere	NXP
Javier del Prado Pavon	NXP
Reinhard Meindl	NXP
Joel Linsky	Qualcomm
Terry Bourk	Qualcomm

Tim Howes	Symbian
Jorgen van Parijs	ST
Guido Bertoni	ST
Amihai Kidron	Texas Instruments
Eran Reuveni	Texas Instruments
Shimojo Yoshimitsu	Toshiba

Version 2.0 + EDR

Neil Stewart	Tality UK, Ltd.
Joel Linsky	RF Micro Devices
Robin Heydon	CSR

Version 1.2

Robin Heydon (section owner	CSR
Jennifer Bray	CSR
Alexander Thoukydides	CSR
Knud Dyring-Olsen	Digianswer/Motorola
Henrik Andersen	Digianswer/Motorola
Jan Åberg	Ericsson
Martin van der Zee	Ericsson
Don Liechty	Extended Systems
Kevin Marquess	Hyper Corp
Roland Hellfajer	Infineon
YC Maa	Integrated Programmable Communications, Inc.
Steve McGowan	Intel
Tod Sizer	Lucent Technologies
Tsuyoshi Okada	Matsushita Electric Industrial Co. Ltd
Andy Glass	Microsoft
Adrian Stephens	Mobilian
Jürgen Schnitzler	Nokia
Thomas Müller	Nokia
Rene Tischer	Nokia
Rob Davies	Philips
Antonio Salloum	Philips
Joel Linsky	Silicon Wave
Terry Bourk	Silicon Wave
Len Ott	Socket Communications
Randy Erman	Taiyo Yuden
Yoshimitsu Shimojo	Toshiba
Toshiki Kizu	Toshiba
Katsuhiro Kinoshita	Toshiba
Sam Turner	TTPCom
John Mersh	TTPCom

Previous versions

Todor Cooklev	3Com Corporation

Toru Aihara	IBM Corporation
Chatschik Bisdikian	IBM Corporation
Nathan Lee	IBM Corporation
Akihiko Mizutani	IBM Corporation
Les Cline	Intel Corporation
Bailey Cross	Intel Corporation
Kris Fleming	Intel Corporation
Robert Hunter	Intel Corporation
Jon Inouye	Intel Corporation
Srikanth Kambhatla	Intel Corporation
Steve Lo	Intel Corporation
Vijay Suthar	Intel Corporation
Bruce P. Kraemer	Intersil
Greg Muchnik	Motorola, Inc.
David E. Cypher	NIST
Thomas Busse	Nokia Corporation
Julien Courthial	Nokia Corporation
Thomas Müller	Nokia Corporation
Dong Nguyen	Nokia Corporation
Jürgen Schnitzler	Nokia Corporation
Fujio Watanabe	Nokia Corporation
Christian Zechlin	Nokia Corporation
Johannes Elg	Telefonaktiebolaget LM Ericsson
Christian Johansson (Section Owner)	Telefonaktiebolaget LM Ericsson
Patrik Lundin	Telefonaktiebolaget LM Ericsson
Tobias Melin	Telefonaktiebolaget LM Ericsson
Mary A. DuVal	Texas Instruments
Thomas M. Siep	Texas Instruments
Masahiro Tada	Toshiba Corporation
John Mersh	TTPCom

2.3.6 Part F: Message Sequence Charts

Version 3.0 + HS

Phil Hough	Anritsu
Kevin Hayes	Atheros
Stratos Chatzikyriakos	Artimi
Shawn Ding	Broadcom
Joe Decuir	CSR
David Suvak	iAnywhere
Koen Derom	NXP Semiconductors
Joel Linsky	Qualcomm
Krishnan Rajamani	Qualcomm
John Hillan	Qualcomm
Mayank Sharma	SiRF

Jason Hillyard	Staccato Communications
William Stoye	Staccato Communications

Version 2.1 + EDR

Ayse Findikli	Atheros
Robert Hulvey	Broadcom
Shawn Ding	Broadcom
Henrik Hedlund	CSR
Robin Heydon	CSR
Simon Kingston	CSR
Steven Singer	CSR
Steven Wenham	CSR
Selim Aissi	Intel
Penny Chen	Intel
Mattias Edlund	Infineon
Josh Benaloh	Microsoft
Andy Glass	Microsoft
Peter Hauser	Microsoft
Joby Lafky	Microsoft
Kristin Lauter	Microsoft
Dan Simon	Microsoft
Don Stanwyck	Microsoft
Yacov Yacobi	Microsoft
Gideon Yuval	Microsoft
Greg Muchnik	Motorola
N Asokan	Nokia
Philip Ginzboorg	Nokia
Kanji Kerai	Nokia
Noel Lobo	Nokia
Kaisa Nyberg	Nokia
Päivi Ruuska	Nokia
Dominique Everaere	NXP
Reinhard Meindl	NXP
Joel Linsky	Qualcomm
Terry Bourk	Qualcomm
Guido Bertoni	ST
Tim Howes	Symbian
Amihai Kidron	Texas Instruments
Eran Reuveni	Texas Instruments
Shimojo Yoshimitsu	Toshiba

Version 1.2

Tom Siep	Bluetooth SIG Inc.
Robin Heydon (section owner)	CSR
Simon Morris	CSR

Jan Åberg	Ericsson
Christian Gehrmann	Ericsson
Joel Linsky	Silicon Wave
John Mersh	TTPCom

Previous versions

Todor Cooklev	3Com Corporation
Toru Aihara	IBM Corporation
Chatschik Bisdikian	IBM Corporation
Nathan Lee	IBM Corporation
Kris Fleming	Intel Corporation
Greg Muchnik	Motorola, Inc.
David E. Cypher	NIST
Thomas Busse	Nokia Corporation
Dong Nguyen (Section Owner)	Nokia Corporation
Fujio Watanabe	Nokia Corporation
Christian Johansson	Telefonaktiebolaget LM Ericsson
Tobias Melin	Telefonaktiebolaget LM Ericsson
Mary A. DuVal	Texas Instruments

2.3.7 Part G: Sample Data

Version 3.0 + HS

Kevin Hayes	Atheros
Robert Hulvey	Broadcom
Yao Wang	IVT
Joel Linsky	Qualcomm
John Saad	Qualcomm

Version 2.1 + EDR

Ayse Findikli	Atheros
Robert Hulvey	Broadcom
Shawn Ding	Broadcom
Robin Heydon	CSR
Simon Kingston	CSR
Steven Singer	CSR
Steven Wenham	CSR
Selim Aissi	Intel
Penny Chen	Intel
Josh Benaloh	Microsoft
Andy Glass	Microsoft
Peter Hauser	Microsoft
Joby Lafky	Microsoft
Kristin Lauter	Microsoft
Dan Simon	Microsoft

Don Stanwyck	Microsoft
Yacov Yacobi	Microsoft
Gideon Yuval	Microsoft
Greg Muchnik	Microsoft
N Asokan	Nokia
Philip Ginzboorg	Nokia
Kanji Kerai	Nokia
Noel Lobo	Nokia
Kaisa Nyberg	Nokia
Arto Palin	Nokia
Päivi Ruuska	Nokia
Dominique Everaere	NXP
Reinhard Meindl	NXP
Guido Bertoni	ST
Eran Reuveni	Texas Instruments
Shimojo Yoshimitsu	Toshiba

Version 1.2

Joel Linsky	Silicon Wave

Previous versions

Thomas Müller	Nokia Corporation
Thomas Sander	Nokia Corporation
Joakim Persson (Section Owner)	Telefonaktiebolaget LM Ericsson

2.3.8 Part H: Security Specification

Version 3.0 + HS

Phil Hough	Anritsu
Edward Harrison	Anritsu
Kevin Hayes	Atheros
Shawn Ding	Broadcom
Robert Hulvey	Broadcom
Yao Wang	IVT
Mark Braun	Motorola
Kaisa Nyberg	Nokia
John Saad	Qualcomm
Joel Linsky	Qualcomm
Eran Reuveni	TI

Version 2.1 + EDR

Ayse Findikli	Atheros
Robert Hulvey	Broadcom
Shawn Ding	Broadcom

Henrik Hedlund	CSR
Robin Heydon	CSR
Simon Kingston	CSR
Steven Singer	CSR
Steven Wenham	CSR
Selim Aissi	Intel
Penny Chen	Intel
Josh Benaloh	Microsoft
Andy Glass	Microsoft
Peter Hauser	Microsoft
Joby Lafky	Microsoft
Kristin Lauter	Microsoft
Dan Simon	Microsoft
Don Stanwyck	Microsoft
Yacov Yacobi	Microsoft
Gideon Yuval	Microsoft
Greg Muchnik	Microsoft
Mattias Edlund	Infineon
N Asokan	Nokia
Philip Ginzboorg	Nokia
Kanji Kerai	Nokia
Noel Lobo	Nokia
Kaisa Nyberg	Nokia
Arto Palin	Nokia
Päivi Ruuska	Nokia
Dominique Everaere	NXP
Reinhard Meindl	NXP
Joel Linsky	QUALCOMM
Terry Bourk	QUALCOMM
Guido Bertoni	ST
Amihai Kidron	Texas Instruments
Eran Reuveni	Texas Instruments
Shimojo Yoshimitsu	Toshiba

2.4 [VOL 3] CORE SYSTEM PACKAGE, HOST

2.4.1 Part A: Logical Link Control and Adaptation Protocol Specification

Version 3.0 + HS

Victor Zhodzishsky	Broadcom
Angel Polo	Broadcom
Ash Kapur	Broadcom
Robert Hulvey	Broadcom
Ken Steck	CSR
Dave Suvak	iAnywhere
Yao Wang	IVT
Jacques Chassot	Logitech
Nathan Sherman	Microsoft
Sandy Spinrad	Microsoft
Doug Clarke	Nokia
Kanji Kerai	Nokia
Ana Donezar Ibanez	Parrot
Joel Linksy	Qualcomm
Andy Estrada	Sony
Dominique Everaere	ST-NXP Wireless

Version 2.1 + EDR

Ayse Findikli	Atheros
Robert Hulvey	Broadcom
Shawn Ding	Broadcom
Robin Heydon	CSR
Simon Kingston	CSR
Steven Singer	CSR
Steven Wenham	CSR
Selim Aissi	Intel
Penny Chen	Intel
Dave Suvak	iAnywhere
Josh Benaloh	Microsoft
Andy Glass	Microsoft
Peter Hauser	Microsoft
Joby Lafky	Microsoft
Kristin Lauter	Microsoft
Dan Simon	Microsoft
Don Stanwyck	Microsoft
Yacov Yacobi	Microsoft
Gideon Yuval	Microsoft
Greg Muchnik	Microsoft
N Asokan	Nokia
Philip Ginzboorg	Nokia

Kanji Kerai	Nokia
Noel Lobo	Nokia
Kaisa Nyberg	Nokia
Dominique Everaere	NXP
Javier del Prado Pavon	NXP
Reinhard Meindl	NXP
Joel Linsky	QUALCOMM
Terry Bourk	QUALCOMM
Tim Howes	Symbian
Jorgen van Parijs	ST
Amihai Kidron	Texas Instruments
Shimojo Yoshimitsu	Toshiba

Version 1.2

Tom Siep	Bluetooth SIG Inc.
Carsten Andersen (section owner	CSR
Jennifer Bray	CSR
Jan Åberg	Ericsson
Martin van der Zee	Ericsson
Sam Ravnborg	Ericsson
Stefan Agnani	Ericsson
Steve McGowan	Intel Corporation
Joby Lafky	Microsoft
Doron Holan	Microsoft
Andy Glass	Microsoft
Brian Redding	Motorola
Jürgen Schnitzler	Nokia
Thomas Müller	Nokia
Rob Davies	Philips
Terry Bourk	Silicon Wave
Michael Hasling	Tality

Previous versions

Jon Burgess	3Com Corporation
Paul Moran	3Com Corporation
Doug Kogan	Extended Systems
Kevin D. Marquess	Hyper Corporation
Toru Aihara	IBM Corporation
Chatschik Bisdikian	IBM Corporation
Kris Fleming	Intel Corporation
Uma Gadamsetty	Intel Corporation
Robert Hunter	Intel Corporation
Jon Inouye	Intel Corporation
Steve C. Lo	Intel Corporation
Chunrong Zhu	Intel Corporation

Sergey Solyanik	Microsoft Corporation
David E. Cypher	NIST
Nada Golmie	NIST
Thomas Busse	Nokia Corporation
Rauno Makinen	Nokia Corporation
Thomas Müller	Nokia Corporation
Petri Nykänen	Nokia Corporation
Peter Ollikainen	Nokia Corporation
Petri O. Nurminen	Nokia Corporation
Johannes Elg	Telefonaktiebolaget LM Ericsson
Jaap Haartsen	Telefonaktiebolaget LM Ericsson
Elco Nijboer	Telefonaktiebolaget LM Ericsson
Ingemar Nilsson	Telefonaktiebolaget LM Ericsson
Stefan Runesson	Telefonaktiebolaget LM Ericsson
Gerrit Slot	Telefonaktiebolaget LM Ericsson
Johan Sörensen	Telefonaktiebolaget LM Ericsson
Goran Svennarp	Telefonaktiebolaget LM Ericsson
Mary A. DuVal	Texas Instruments
Thomas M. Siep	Texas Instruments
Kinoshita Katsuhiro	Toshiba Corporation

2.4.2 Part B: Service Discovery Protocol (SDP)

Version 2.1 + EDR

Robin Heydon	CSR
Mattias Edlund	Infineon
Päivi Ruuska	Nokia
Arto Palin	Nokia
Joel Linsky	QUALCOMM
Terry Bourk	QUALCOMM
Amihai Kidron	Texas Instruments
Shimojo Yoshimitsu	Toshiba

Previous versions

Ned Plasson	3Com Corporation
John Avery	Convergence
Jason Kronz	Convergence
Chatschik Bisdikian	IBM Corporation
Parviz Kermani	IBM Corporation
Brent Miller	IBM Corporation
Dick Osterman	IBM Corporation
Bob Pascoe	IBM Corporation
Jon Inouye	Intel Corporation
Srikanth Kambhatla	Intel Corporation
Jay Eaglstun	Motorola, Inc.

Dale Farnsworth (Section Owner)	Motorola, Inc.
Jean-Michel Rosso	Motorola, Inc.
Jan Grönholm	Nokia Corporation
Kati Rantala	Nokia Corporation
Thomas Müller	Nokia Corporation
Johannes Elg	Telefonaktiebolaget LM Ericsson
Kazuaki Iwamura	Toshiba Corporation

2.4.3 Part C: Generic Access Profile

Version 3.0 + HS

Robert Hulvey	Broadcom
Ken Steck	CSR
Jacques Chassot	Logitech
Nathan Sherman	Microsoft
Sandy Spinrad	Microsoft
Kanji Kerai	Nokia
Joel Linksy	Qualcomm
Andy Estrada	Sony

Version 2.1 + EDR

Robin Heydon	CSR
Mattias Edlund	Infineon
Päivi Ruuska	Nokia
Arto Palin	Nokia
Joel Linsky	QUALCOMM
Terry Bourk	QUALCOMM
Shimojo Yoshimitsu	Toshiba

Version 1.2

Jennifer Bray	CSR
Alexander Thoukydides	CSR
Christian Gehrmann	Ericsson
Henrik Hedlund	Ericsson
Jan Åberg	Ericsson
Stefan Agnani	Ericsson
Thomas Müller	Nokia
Joel Linsky	Silicon Wave
Terry Bourk	Silicon Wave
Katsuhiro Kinoshita	Toshiba

Previous versions

Ken Morley	3Com Corporation
Chatschik Bisdikian	IBM Corporation
Jon Inouye	Intel Corporation

Brian Redding	Motorola, Inc.
David E. Cypher	NIST
Stephane Bouet	Nokia Corporation
Thomas Müller	Nokia Corporation
Martin Roter	Nokia Corporation
Johannes Elg	Telefonaktiebolaget LM Ericsson
Patric Lind (Section Owner)	Telefonaktiebolaget LM Ericsson
Erik Slotboom	Telefonaktiebolaget LM Ericsson
Johan Sörensen	Telefonaktiebolaget LM Ericsson

2.4.4 Part D: Test Support

Version 3.0 + HS

Phil Hough	Anritsu
Edward Harrison	Anritsu
Angus Robinson	Anritsu
Kevin Hayes	Atheros
Stratos Chatzikyriakos	Artimi
Shawn Ding	Broadcom
Robert Hulvey	Broadcom
Yao Wang	IVT
Joe Decuir	CSR
Mark Braun	Motorola
Joel Linsky	Qualcomm
Eran Reuveni	TI

Version 1.2

Emilio Mira Escartis	Cetecom
Robin Heydon	CSR
Jennifer Bray	CSR
Stefan Agnani (section owner)	Ericsson
Terry Bourk	Silicon Wave
Joel Linsky	Silicon Wave
Michael Hasling	Tality

Previous versions [Test Mode]

Jeffrey Schiffer	Intel Corporation
David E. Cypher	NIST
Daniel Bencak	Nokia Corporation
Arno Kefenbaum	Nokia Corporation
Thomas Müller (Section Owner)	Nokia Corporation
Roland Schmale	Nokia Corporation
Fujio Watanabe	Nokia Corporation
Stefan Agnani	Telefonaktiebolaget LM Ericsson
Mårten Mattsson	Telefonaktiebolaget LM Ericsson

Tobias Melin	Telefonaktiebolaget LM Ericsson
Lars Nord	Telefonaktiebolaget LM Ericsson
Fredrik Töörn	Telefonaktiebolaget LM Ericsson
John Mersh	TTPCom
Ayse Findikli	Zeevo, Inc.

Previous versions [Test Control Interface]

Mike Feldman	Motorola, Inc.
Thomas Müller	Nokia Corporation
Stefan Agnani (Section Owner)	Telefonaktiebolaget LM Ericsson
Mårten Mattsson	Telefonaktiebolaget LM Ericsson
Dan Sönnerstam	Telefonaktiebolaget LM Ericsson

2.4.5 Part E: AMP Manager Protocol

Version 3.0 + HS

Kevin Hayes	Atheros
Robert Hulvey	Broadcom
Dave Suvak	iAnywhere
Yao Wang	IVT
Doug Clark	Nokia
Kaisa Nyberg	Nokia
James Steele	Nokia
Joel Linsky	Qualcomm
John Saad	Qualcomm

2.5 [VOL 4] HOST CONTROLLER INTERFACE [TRANSPORT LAYER]

Toru Aihara	IBM Corporation
Edgar Kerstan	IBM Corporation
Nathan Lee	IBM Corporation
Kris Fleming	Intel Corporation
Robert Hunter	Intel Corporation
Patrick Kane	Motorola, Inc.
Uwe Gondrum	Nokia Corporation
Thomas Müller	Nokia Corporation
Christian Zechlin	Nokia Corporation
Johannes Elg	Telefonaktiebolaget LM Ericsson
Sven Jerlhagen	Telefonaktiebolaget LM Ericsson
Christian Johansson	Telefonaktiebolaget LM Ericsson
Patrik Lundin	Telefonaktiebolaget LM Ericsson
Lars Novak	Telefonaktiebolaget LM Ericsson
Masahiro Tada	Toshiba Corporation
Steve Ross	Digianswer A/S
Chatschik Bisdikian	IBM Corporation
Les Cline	Intel Corporation
Brad Hosler	Intel Corporation
John Howard	Intel Corporation
Srikanth Kambhatla	Intel Corporation
Kosta Koeman	Intel Corporation
John McGrath	Intel Corporation
Patrik Lundin	Telefonaktiebolaget LM Ericsson
Leonard Ott	Socket Communications
Rebecca O'Dell	Signia Technologies
Tsuyoshi Okada	Matsushita Electric
Robin Heydon	CSR
Toru Aihara	IBM Corporation
Edgar Kerstan	IBM Corporation
Nathan Lee	IBM Corporation
Kris Fleming	Intel Corporation
Robert Hunter	Intel Corporation
Patrick Kane	Motorola, Inc.
Uwe Gondrum	Nokia Corporation
Thomas Müller	Nokia Corporation
Christian Zechlin	Nokia Corporation
Johannes Elg	Telefonaktiebolaget LM Ericsson
Sven Jerlhagen	Telefonaktiebolaget LM Ericsson
Christian Johansson	Telefonaktiebolaget LM Ericsson
Patrik Lundin	Telefonaktiebolaget LM Ericsson
Lars Novak	Telefonaktiebolaget LM Ericsson
Masahiro Tada	Toshiba Corporation

Steve Ross	Digianswer A/S
Chatschik Bisdikian	IBM Corporation
Les Cline	Intel Corporation
Brad Hosler	Intel Corporation
John Howard	Intel Corporation
Srikanth Kambhatla	Intel Corporation
Kosta Koeman	Intel Corporation
John McGrath	Intel Corporation
Patrik Lundin	Telefonaktiebolaget LM Ericsson
Leonard Ott	Socket Communications
Rebecca O'Dell	Signia Technologies
Tsuyoshi Okada	Matsushita Electric
Robin Heydon	CSR

2.6 [VOL 5] CORE SYSTEM PACKAGE [AMP CONTROLLER VOLUME]

2.6.1 Part A: 802.11 PAL

Version 3.0 +HS

Angus Robinson	Anritsu
Edward Harrison	Anritsu
Phil Hough	Anritsu
Stratos Chatzikyriakos	Artimi
Kevin Hayes	Atheros
Prerepa Viswanadham	Atheros
Chris Hansen	Broadcom
Raymond Hayes	Broadcom
Joe Decuir	CSR
Nick Jackson	CSR
David Suvak	iAnywhere
Ganesh Venkatesan	Intel
Quinton Yuan	Marvell
Raja Banajera	Marvell
John Barr	Motorola
Janne Marin	Nokia
Mika Kasslin	Nokia
Joel Linsky	Qualcomm
Krishnan Rajamani	Qualcomm
Terry Bourk	Qualcomm
Ignacio Gimeno	ST-NXP Wireless
William Stoye	Staccato Communications
Amir Yassur	TI
Yossi Peery	TI

Specification Volume 1

SPECIFICATION OF THE *BLUETOOTH* SYSTEM

Wireless Connections Made Easy

Architecture & Terminology Overview

Covered Core Package version:
3.0 + HS

Bluetooth®

Revision History

The Revision History is shown in the “Appendix” on page 47 [vol. 0].

Contributors

The persons who contributed to this specification are listed in the Appendix.

Web Site

This specification can also be found on the official Bluetooth web site:
http://www.bluetooth.com

Disclaimer and Copyright Notice

The copyright in these specifications is owned by the Promoter Members of Bluetooth SIG, Inc. (“Bluetooth SIG”). Use of these specifications and any related intellectual property (collectively, the “Specification”), is governed by the Promoters Membership Agreement among the Promoter Members and Bluetooth SIG (the “Promoters Agreement”), certain membership agreements between Bluetooth SIG and its Adopter and Associate Members (the “Membership Agreements”) and the Bluetooth Specification Early Adopters Agreements (“1.2 Early Adopters Agreements”) among Early Adopter members of the unincorporated Bluetooth special interest group and the Promoter Members (the “Early Adopters Agreement”). Certain rights and obligations of the Promoter Members under the Early Adopters Agreements have been assigned to Bluetooth SIG by the Promoter Members.

Use of the Specification by anyone who is not a member of Bluetooth SIG or a party to an Early Adopters Agreement (each such person or party, a “Member”), is prohibited. The legal rights and obligations of each Member are governed by their applicable Membership Agreement, Early Adopters Agreement or Promoters Agreement. No license, express or implied, by estoppel or otherwise, to any intellectual property rights are granted herein.

Any use of the Specification not in compliance with the terms of the applicable Membership Agreement, Early Adopters Agreement or Promoters Agreement is prohibited and any such prohibited use may result in termination of the applicable Membership Agreement or Early Adopters Agreement and other liability permitted by the applicable agreement or by applicable law to Bluetooth SIG or any of its members for patent, copyright and/or trademark infringement.

THE SPECIFICATION IS PROVIDED “AS IS” WITH NO WARRANTIES WHATSOEVER, INCLUDING ANY WARRANTY OF MERCHANTABILITY, NONINFRINGEMENT, FITNESS FOR ANY PARTICULAR PURPOSE, SATISFACTORY QUALITY, OR REASONABLE SKILL OR CARE, OR ANY WARRANTY ARISING OUT OF ANY COURSE OF DEALING, USAGE, TRADE PRACTICE, PROPOSAL, SPECIFICATION OR SAMPLE.

Each Member hereby acknowledges that products equipped with the Bluetooth® technology (“Bluetooth® Products”) may be subject to various regulatory controls under the laws and regulations of various governments worldwide. Such laws and regulatory controls may govern, among other things, the combination, operation, use, implementation and distribution of Bluetooth® Products. Examples of such laws and regulatory controls include, but are not limited to, airline regulatory controls, telecommunications regulations, technology transfer controls and health and safety regulations. Each Member is solely responsible for the compliance by their Bluetooth® Products with any such laws and regulations and for obtaining any and all required authorizations, permits, or licenses for their Bluetooth® Products related to such regulations within the applicable jurisdictions. Each Member acknowledges that nothing in the Specification provides any information or assistance in connection with securing such compliance, authorizations or licenses. NOTHING IN THE SPECIFICATION CREATES ANY WARRANTIES, EITHER EXPRESS OR IMPLIED, REGARDING SUCH LAWS OR REGULATIONS.

ALL LIABILITY, INCLUDING LIABILITY FOR INFRINGEMENT OF ANY INTELLECTUAL PROPERTY RIGHTS OR FOR NONCOMPLIANCE WITH LAWS, RELATING TO USE OF THE SPECIFICATION IS EXPRESSLY DISCLAIMED. BY USE OF THE SPECIFICATION, EACH MEMBER EXPRESSLY WAIVES ANY CLAIM AGAINST BLUETOOTH SIG AND ITS PROMOTER MEMBERS RELATED TO USE OF THE SPECIFICATION.

Bluetooth SIG reserves the right to adopt any changes or alterations to the Specification as it deems necessary or appropriate.

Copyright © 1999 – 2009

Ericsson AB,
Lenovo,
Intel Corporation,
Microsoft Corporation,
Motorola, Inc.,
Nokia Corporation,
Toshiba Corporation

*Third-party brands and names are the property of their respective owners.

TABLE OF CONTENTS

Part A
ARCHITECTURE

Contents **11**

1 General Description **15**
1.1 Overview of BR/EDR Operation 15
1.2 Overview Of AMP Operation 17
1.3 Nomenclature 18

2 Core System Architecture **23**
2.1 Core Architectural Blocks 27
2.1.1 Host Architectural Blocks 27
2.1.1.1 Channel manager 27
2.1.1.2 L2CAP resource manager 27
2.1.1.3 AMP Manager Protocol 27
2.1.2 BR/EDR Controller Architectural Blocks 28
2.1.2.1 Device Manager 28
2.1.2.2 Link Manager 28
2.1.2.3 Baseband Resource Manager 28
2.1.2.4 Link Controller 29
2.1.2.5 RF 29
2.1.3 AMP Controller architectural blocks 29
2.1.3.1 AMP HCI 29
2.1.3.2 AMP PAL 30
2.1.3.3 AMP MAC 30
2.1.3.4 AMP PHY 30

3 Data Transport Architecture **31**
3.1 Core Traffic Bearers 32
3.1.1 Framed data traffic 33
3.1.2 Unframed data traffic 34
3.1.3 Reliability of traffic bearers 35
3.1.3.1 BR/EDR reliability 35
3.1.3.2 AMP reliability 36
3.2 Transport Architecture Entities 37
3.2.1 BR/EDR generic packet structure 37
3.3 Physical Channels 40
3.3.1 BR/EDR Physical Channels 41
3.3.1.1 Basic piconet channel 41
3.3.1.2 Adapted piconet channel 42
3.3.1.3 Inquiry scan channel 43
3.3.1.4 Page scan channel 44

3.3.2 AMP physical channel 45
3.3.2.1 Overview 45
3.3.2.2 Characteristics 45
3.3.2.3 Topology 45
3.3.2.4 Supported layers 46
3.4 Physical Links 46
3.4.1 BR/EDR Links supported by the basic and adapted piconet physical channel 46
3.4.1.1 Active physical link 47
3.4.1.2 Parked physical link 47
3.4.2 Links Supported by the Scanning Physical Channels 48
3.4.3 Links Supported by the AMP Physical Channels 48
3.5 Logical Links and Logical Transports 48
3.5.1 Casting 50
3.5.2 Scheduling and acknowledgement scheme 50
3.5.3 Class of Data 50
3.5.4 Logical Transports 51
3.5.4.1 BR/EDR Asynchronous connection-oriented (ACL) 51
3.5.4.2 BR/EDR Synchronous Connection-Oriented (SCO) 52
3.5.4.3 BR/EDR Extended Synchronous Connection-Oriented (eSCO) 53
3.5.4.4 BR/EDR Active Slave Broadcast (ASB) 53
3.5.4.5 BR/EDR Parked Slave Broadcast (PSB) 54
3.5.5 Logical Links 55
3.5.5.1 BR/EDR Logical Links 55
3.5.5.2 AMP Logical Links 57
3.6 L2CAP Channels 58
4 Communication Topology 59
4.1 Piconet Topology 59
4.2 Operational Procedures and Modes 61
4.2.1 BR/EDR Procedures 61
4.2.1.1 Inquiry (Discovering) Procedure 61
4.2.1.2 Paging (Connecting) Procedure 62
4.2.1.3 Connected mode 62
4.2.1.4 Hold mode 63
4.2.1.5 Sniff mode 63
4.2.1.6 Parked state 64
4.2.1.7 Role switch procedure 64
4.2.1.8 Enhanced Data Rate 65
4.2.2 AMP Procedures 65
4.2.2.1 AMP Discovery Procedures 65
4.2.2.2 Physical Link Creation Procedure 65

4.2.2.3 Logical Link Creation Procedure....66

5 Secure Simple Pairing Overview....67

5.1 Security Goals....67
5.2 Passive Eavesdropping Protection....67
5.3 Man-In-The-Middle Protection....68
5.4 Association Models....69
5.4.1 Numeric Comparison....69
5.4.2 Just Works....69
5.4.3 Out of Band....70
5.4.4 Passkey Entry....70
5.4.5 Association Model Overview....71
5.5 AMP Security....71

Part B
ACRONYMS & ABBREVIATIONS

Contents....74

1 List of Acronyms and Abbreviations....75

Part C
CORE SPECIFICATION CHANGE HISTORY

Contents....85

1 Deprecated Features....86

2 Changes from V1.1 to V1.2....87

2.1 New Features....87
2.2 Structure Changes....87
2.3 Deprecated Features list....87
2.4 Changes in Wording....88
2.5 Nomenclature Changes....88

3 Changes from V1.2 to V2.0 + EDR....89

3.1 New Features....89
3.2 Deprecated Features....89

4 Changes from V2.0 + EDR to V2.1 + EDR....90

4.1 New features....90
4.2 Deprecated Features....90

5 Changes From V2.1 + EDR To V3.0 + HS....91

5.1 New Features....91
5.2 Deprecated Features....91

Part D

MIXING OF SPECIFICATION VERSIONS

Contents 95

1 Mixing of Specification Versions 96

1.1 Features and their Types 98

1.2 Core Specification Addendums 99

Part E
IEEE LANGUAGE

Contents 103

1 Use of IEEE Language 105

1.1 Shall 105

1.2 Must 106

1.3 Will 106

1.4 Should 106

1.5 May 106

1.6 Can 107

ARCHITECTURE

CONTENTS

1 General Description 15
1.1 Overview of BR/EDR Operation 15
1.2 Overview Of AMP Operation 17
1.3 Nomenclature 18
2 Core System Architecture 23
2.1 Core Architectural Blocks 27
2.1.1 Host Architectural Blocks 27
2.1.1.1 Channel manager 27
2.1.1.2 L2CAP resource manager 27
2.1.1.3 AMP Manager Protocol 27
2.1.2 BR/EDR Controller Architectural Blocks 28
2.1.2.1 Device Manager 28
2.1.2.2 Link Manager 28
2.1.2.3 Baseband Resource Manager 28
2.1.2.4 Link Controller 29
2.1.2.5 RF 29
2.1.3 AMP Controller architectural blocks 29
2.1.3.1 AMP HCI 29
2.1.3.2 AMP PAL 30
2.1.3.3 AMP MAC 30
2.1.3.4 AMP PHY 30
3 Data Transport Architecture 31
3.1 Core Traffic Bearers 32
3.1.1 Framed data traffic 33
3.1.2 Unframed data traffic 34
3.1.3 Reliability of traffic bearers 35
3.1.3.1 BR/EDR reliability 35
3.1.3.2 AMP reliability 36
3.2 Transport Architecture Entities 37
3.2.1 BR/EDR generic packet structure 37
3.3 Physical Channels 40
3.3.1 BR/EDR Physical Channels 41
3.3.1.1 Basic piconet channel 41
3.3.1.2 Adapted piconet channel 42
3.3.1.3 Inquiry scan channel 43
3.3.1.4 Page scan channel 44
3.3.2 AMP physical channel 45
3.3.2.1 Overview 45
3.3.2.2 Characteristics 45
3.3.2.3 Topology 45

3.3.2.4 Supported layers 46
3.4 Physical Links 46
3.4.1 BR/EDR Links supported by the basic and adapted piconet physical channel46
3.4.1.1 Active physical link 47
3.4.1.2 Parked physical link 47
3.4.2 Links Supported by the Scanning Physical Channels 48
3.4.3 Links Supported by the AMP Physical Channels 48
3.5 Logical Links and Logical Transports 48
3.5.1 Casting 50
3.5.2 Scheduling and acknowledgement scheme 50
3.5.3 Class of Data 50
3.5.4 Logical Transports 51
3.5.4.1 BR/EDR Asynchronous connection-oriented (ACL) 51
3.5.4.2 BR/EDR Synchronous Connection-Oriented (SCO) 52
3.5.4.3 BR/EDR Extended Synchronous Connection-Oriented (eSCO) 53
3.5.4.4 BR/EDR Active Slave Broadcast (ASB) 53
3.5.4.5 BR/EDR Parked Slave Broadcast (PSB) 54
3.5.5 Logical Links 55
3.5.5.1 BR/EDR Logical Links 55
3.5.5.2 AMP Logical Links 57
3.6 L2CAP Channels 58

4 Communication Topology 59

4.1 Piconet Topology 59
4.2 Operational Procedures and Modes 61
4.2.1 BR/EDR Procedures 61
4.2.1.1 Inquiry (Discovering) Procedure 61
4.2.1.2 Paging (Connecting) Procedure 62
4.2.1.3 Connected mode 62
4.2.1.4 Hold mode 63
4.2.1.5 Sniff mode 63
4.2.1.6 Parked state 64
4.2.1.7 Role switch procedure 64
4.2.1.8 Enhanced Data Rate 65
4.2.2 AMP Procedures 65
4.2.2.1 AMP Discovery Procedures 65
4.2.2.2 Physical Link Creation Procedure 65
4.2.2.3 Logical Link Creation Procedure 66

5 Secure Simple Pairing Overview 67

5.1 Security Goals 67

5.2 Passive Eavesdropping Protection 67
5.3 Man-In-The-Middle Protection.....68
5.4 Association Models 69
5.4.1 Numeric Comparison.....69
5.4.2 Just Works.....69
5.4.3 Out of Band 70
5.4.4 Passkey Entry 70
5.4.5 Association Model Overview 71
5.5 AMP Security 71

1 GENERAL DESCRIPTION

Bluetooth wireless technology is a short-range communications system intended to replace the cable(s) connecting portable and/or fixed electronic devices. The key features of Bluetooth wireless technology are robustness, low power, and low cost. Many features of the core specification are optional, allowing product differentiation.

The Bluetooth core system consists of a Host and one or more Controllers. A Host is defined as all of the layers below the profiles and above the Host Controller Interface (HCI). A Controller is defined as all of the layers below HCI. Two types of Controllers are defined in this version of the Core Specification:

- a Basic Rate / Enhanced Data Rate Controller including the Radio, Baseband, Link Manager and optionally HCI
- an Alternate MAC/PHY (AMP) Controller including the AMP PAL (Protocol Adaptation Layer), AMP MAC, Protocol Adaptation Layer (PAL), and optionally HCI.

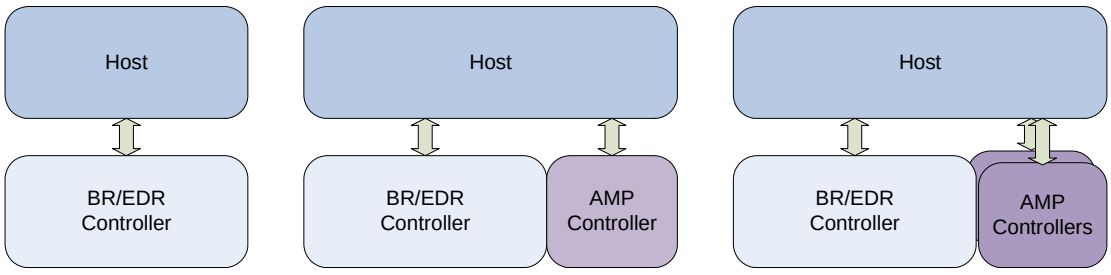

Figure 1.1: Bluetooth Host and Controller Combinations: BR/EDR only, BR/EDR with one AMP, and BR/EDR with multiple AMPs

This volume of the specification provides an overview of the Bluetooth system architecture, communication topologies and data transport features. The text in this volume of the specification should be treated as informational and used as a background and for context-setting.

1.1 OVERVIEW OF BR/EDR OPERATION

The Basic Rate / Enhanced Data Rate (BR/EDR) RF (physical layer) operates in the unlicensed ISM band at 2.4 GHz. The system employs a frequency hop transceiver to combat interference and fading and provides many FHSS carriers. Basic Rate RF operation uses a shaped, binary frequency modulation to minimize transceiver complexity. The symbol rate is 1 Megasymbol per second (Ms/s) supporting the bit rate of 1 Megabit per second (Mb/s) or, with Enhanced Data Rate, a gross air bit rate of 2 or 3Mb/s. These modes are known as Basic Rate and Enhanced Data Rate respectively.

During typical operation a physical radio channel is shared by a group of devices that are synchronized to a common clock and frequency hopping pat-

tern. One device provides the synchronization reference and is known as the master. All other devices are known as slaves. A group of devices synchronized in this fashion form a piconet. This is the fundamental form of communication in the Bluetooth wireless technology.

Devices in a piconet use a specific frequency hopping pattern, which is algorithmically determined by certain fields in the Bluetooth address and clock of the master. The basic hopping pattern is a pseudo-random ordering of the 79 frequencies in the ISM band. The hopping pattern may be adapted to exclude a portion of the frequencies that are used by interfering devices. The adaptive hopping technique improves Bluetooth co-existence with static (non-hopping) ISM systems when these are co-located.

The physical channel is sub-divided into time units known as slots. Data is transmitted between Bluetooth devices in packets, that are positioned in these slots. When circumstances permit, a number of consecutive slots may be allocated to a single packet. Frequency hopping takes place between the transmission or reception of packets. Bluetooth technology provides the effect of full duplex transmission through the use of a Time-Division Duplex (TDD) scheme.

Above the physical channel there is a layering of links and channels and associated control protocols. The hierarchy of channels and links from the physical channel upwards is physical channel, physical link, logical transport, logical link and L2CAP channel. These are discussed in more detail in Section 3.3 on page 40 to Section 3.6 on page 58 but are introduced here to aid the understanding of the remainder of this section.

Within a physical channel, a physical link is formed between any two devices that transmit packets in either direction between them. In a piconet physical channel there are restrictions on which devices may form a physical link. There is a physical link between each slave and the master. Physical links are not formed directly between the slaves in a piconet.

The physical link is used as a transport for one or more logical links that support unicast synchronous, asynchronous and isochronous traffic, and broadcast traffic. Traffic on logical links is multiplexed onto the physical link by occupying slots assigned by a scheduling function in the resource manager.

A control protocol for the baseband and physical layers is carried over logical links in addition to user data. This is the link manager protocol (LMP). Devices that are active in a piconet have a default asynchronous connection-oriented logical transport that is used to transport the LMP protocol signaling. For historical reasons this is known as the ACL logical transport. The default ACL logical transport is the one that is created whenever a device joins a piconet. Additional logical transports may be created to transport synchronous data streams when this is required.

The Link Manager function uses LMP to control the operation of devices in the piconet and provide services to manage the lower architectural layers (radio

layer and baseband layer). The LMP protocol is only carried on the default ACL logical transport and the default broadcast logical transport.

Above the baseband layer the L2CAP layer provides a channel-based abstraction to applications and services. It carries out segmentation and reassembly of application data and multiplexing and de-multiplexing of multiple channels over a shared logical link. L2CAP has a protocol control channel that is carried over the default ACL logical transport. Application data submitted to the L2CAP protocol may be carried on any logical link that supports the L2CAP protocol.

1.2 OVERVIEW OF AMP OPERATION

Alternate MAC/PHYs (AMP) are secondary Controllers in the Bluetooth core system. The BR/EDR radio, the primary radio, is used to perform discovery, association, connection establishment, and connection maintenance. Once an L2CAP connection has been established between two devices over the BR/EDR radio, the AMP Managers can discover the AMPs that are available on the other device. When an AMP is common between the two devices , the Core system provides mechanisms for moving data traffic from BR/EDR Controller to an AMP Controller.

Each AMP consists of a Protocol Adaptation Layer (PAL) on top of a MAC and PHY. The PAL is responsible for mapping the Bluetooth protocols and behavior (as specified by HCI) to the specific protocols of the underlying MAC and PHY.

L2CAP channels may be created on, or moved to, an AMP. L2CAP channels may also be moved back to the BR/EDR radio when those capabilities are not necessary or when the AMP physical link has a link supervision timeout. A link supervision timeout on the BR/EDR radio forces a disconnection of all AMP physical links between those devices.

AMPs may be enabled or disabled as needed in order to minimize power consumption in the system.

1.3 NOMENCLATURE

Where the following terms appear in the specification they have the meaning given in Table 1.1 on page 18.

Ad Hoc Network	A network typically created in a spontaneous manner. An ad hoc network requires no formal infrastructure and is limited in temporal and spatial extent.
Active Slave Broadcast (ASB)	The Active Slave Broadcast logical transport that is used to transport L2CAP user traffic to all active devices in the piconet over the BR/EDR Controller. See Section 3.5.4.4 on page 53
AMP Controller	A term referring to AMP PHY, AMP MAC, Protocol Adaptation Layer, and HCI layers.
Beacon Train	A pattern of reserved slots within a basic or adapted piconet physical channel. Transmissions starting in these slots are used to resynchronize parked devices.
Bluetooth	Bluetooth is a wireless communication link, operating in the unlicensed ISM band at 2.4 GHz using a frequency hopping transceiver. It allows real-time AV and data communications between Bluetooth Hosts. The link protocol is based on time slots.
Bluetooth Baseband	The part of the Bluetooth system that specifies or implements the medium access and physical layer procedures to support the exchange of real-time voice, data information streams, and ad hoc networking between Bluetooth Devices.
Bluetooth Clock	A 28 bit clock internal to a Controller sub-system that ticks every 312.5μs. The value of this clock defines the slot numbering and timing in the various physical channels.
Bluetooth Controller	A sub-system containing the Bluetooth RF, baseband, resource controller, link manager, device manager and a Bluetooth HCI.
Bluetooth Device	A device is a device that is capable of short-range wireless communications using the Bluetooth system.
Bluetooth Device Address	A 48 bit address used to identify each Bluetooth device.
BD_ADDR	The Bluetooth device Address, BD_ADDR, is used to identify a Bluetooth device.
HCI	The Host Controller Interface (HCI) provides a command interface to the baseband controller and link manager and access to hardware status and control registers. This interface provides a uniform method of accessing the Bluetooth baseband capabilities.

Table 1.1: Nomenclature.

Host	A computing device, peripheral, cellular telephone, access point to PSTN network or LAN, etc. A Bluetooth Host attached to a Bluetooth Controller may communicate with other Bluetooth Hosts attached to their Controllers as well.
BR/EDR Controller	A term referring to the Bluetooh Radio, Baseband, Link Manager, and HCI layers.
Channel	Either a physical channel or an L2CAP channel, depending on the context.
Connect (to service)	The establishment of a connection to a service. If not already done, this also includes establishment of a physical link, logical transport, logical link and L2CAP channel.
Connectable device	A Bluetooth device in range that periodically listens on its page scan physical channel and will respond to a page on that channel.
Connected devices	Two Bluetooth devices in the same piconet and with a physical link between them.
Connecting	A phase in the communication between devices when a connection between the devices is being established. (Connecting phase follows after the link establishment phase is completed.)
Connection	A connection between two peer applications or higher layer protocols mapped onto an L2CAP channel.
Connection establishment	A procedure for creating a connection mapped onto a channel.
Controller	A collective term referring to all of the layers below HCI.
Coverage area	The area where two Bluetooth devices can exchange messages with acceptable quality and performance.
Creation of a secure connection	A procedure of establishing a connection, including authentication and encryption.
Creation of a trusted relationship	A procedure where the remote device is marked as a trusted device. This includes storing a common link key for future authentication and pairing (if the link key is not available).
Device discovery	A procedure for retrieving the Bluetooth device address, clock, class-of-device field and used page scan mode from discoverable devices.
Discoverable device	A Bluetooth device in range that periodically listens on an inquiry scan physical channel and will respond to an inquiry on that channel. Discoverable device are normally also connectable.
Inquiring device	A Bluetooth device that is carrying out the inquiry procedure.

Table 1.1: Nomenclature.

Inquiry	A procedure where a Bluetooth device transmits inquiry messages and listens for responses in order to discover the other Bluetooth devices that are within the coverage area.
Inquiry scan	A procedure where a Bluetooth device listens for inquiry messages received on its inquiry scan physical channel.
Interoperability	The ability of two or more systems or components to exchange information and to use the information that has been exchanged.
Isochronous data	Information in a stream where each information entity in the stream is bound by a time relationship to previous and successive entities.
Known device	A Bluetooth device for which at least the BD_ADDR is stored.
L2CAP Channel	A logical connection on L2CAP level between two devices serving a single application or higher layer protocol.
L2CAP Channel establishment	A procedure for establishing a logical connection on L2CAP level.
Link establishment	A procedure for establishing the default ACL link and hierarchy of links and channels between devices.
Link	Shorthand for a logical link.
Link key	A secret key that is known by two devices and is used in order to authenticate each device to the other
LMP authentication	An LMP level procedure for verifying the identity of a remote device.
LMP pairing	A procedure that authenticates two devices and creates a common link key that can be used as a basis for a trusted relationship or a (single) secure connection.
Logical link	The lowest architectural level used to offer independent data transport services to clients of the Bluetooth system.
Logical transport	Used in Bluetooth to represent commonality between different logical links due to shared acknowledgement protocol and link identifiers.
Name discovery	A procedure for retrieving the user-friendly name (the Bluetooth device name) of a connectable device.
Packet	Format of aggregated bits that are transmitted on a physical channel.
Page	The initial phase of the connection procedure where a device transmits a train of page messages until a response is received from the target device or a time-out occurs.
Page scan	A procedure where a device listens for page messages received on its page scan physical channel.

Table 1.1: Nomenclature.

Paging device	A Bluetooth device that is carrying out the page procedure.
Paired device	A Bluetooth device with which a link key has been exchanged (either before connection establishment was requested or during connecting phase).
Parked device	A device operating in a basic mode piconet that is synchronized to the master but has given up its default ACL logical transport.
Passkey	A 6-digit number used to authenticate connections when Secure Simple Pairing is used.
Physical Channel	Characterized by synchronized occupancy of a sequence of RF carriers by one or more devices. A number of physical channel types exist with characteristics defined for their different purposes.
Physical Link	A Baseband-level connection between two devices established using paging.
Piconet	A collection of devices occupying a shared physical channel where one of the devices is the Piconet Master and the remaining devices are connected to it.
Piconet Physical Channel	A Channel that is divided into time slots in which each slot is related to an RF hop frequency. Consecutive hops normally correspond to different RF hop frequencies and occur at a standard hop rate of 1600 hops/s. These consecutive hops follow a pseudo-random hopping sequence, hopping through a 79 RF channel set, or optionally fewer channels when Adaptive Frequency Hopping (AFH) is in use.
Piconet Master	The device in a piconet whose Bluetooth Clock and Bluetooth Device Address are used to define the piconet physical channel characteristics.
Piconet Slave	Any device in a piconet that is not the Piconet Master, but is connected to the Piconet Master.
PIN	A user-friendly number that can be used to authenticate connections to a device before pairing has taken place.
PMP	A Participant in Multiple Piconets. A device that is concurrently a member of more than one piconet, which it achieves using time division multiplexing (TDM) to interleave its activity on each piconet physical channel.
The Parked Slave Broadcast (PSB)	The Parked Slave Broadcast logical transport that is used for communications between the master and parked devices. These communications may also be received by active devices.Section 3.5.4.5 on page 54.
Scatternet	Two or more piconets that include one or more devices acting as PMPs.

Table 1.1: Nomenclature.

Service Layer Protocol	A protocol that uses an L2CAP channel for transporting PDUs.
Service discovery	Procedures for querying and browsing for services offered by or through another Bluetooth device.
Silent device	A Bluetooth device appears as silent to a remote device if it does not respond to inquiries made by the remote device.
Unknown device	A Bluetooth device for which no information (Bluetooth Device Address, link key or other) is stored.

Table 1.1: Nomenclature.

2 CORE SYSTEM ARCHITECTURE

The Bluetooth Core system includes a Host, a BR/EDR Controller and zero or more AMP Controllers. A minimal implementation of the Bluetooth BR/EDR core system covers the four lowest layers and associated protocols defined by the Bluetooth specification as well as one common service layer protocol; the Service Discovery Protocol (SDP) and the overall profile requirements are specified in the Generic Access Profile (GAP). The BR/EDR Core system includes support of Alternate MAC/PHYs (AMPs) including an AMP Manager Protocol and Protocol Adaptation Layers (PALs) supporting externally referenced MAC/PHYs.

A complete Bluetooth application requires a number of additional service and higher layer protocols that are defined in the Bluetooth specification, but are not described here. The core system architecture is shown in Figure 2.1 on page 24.

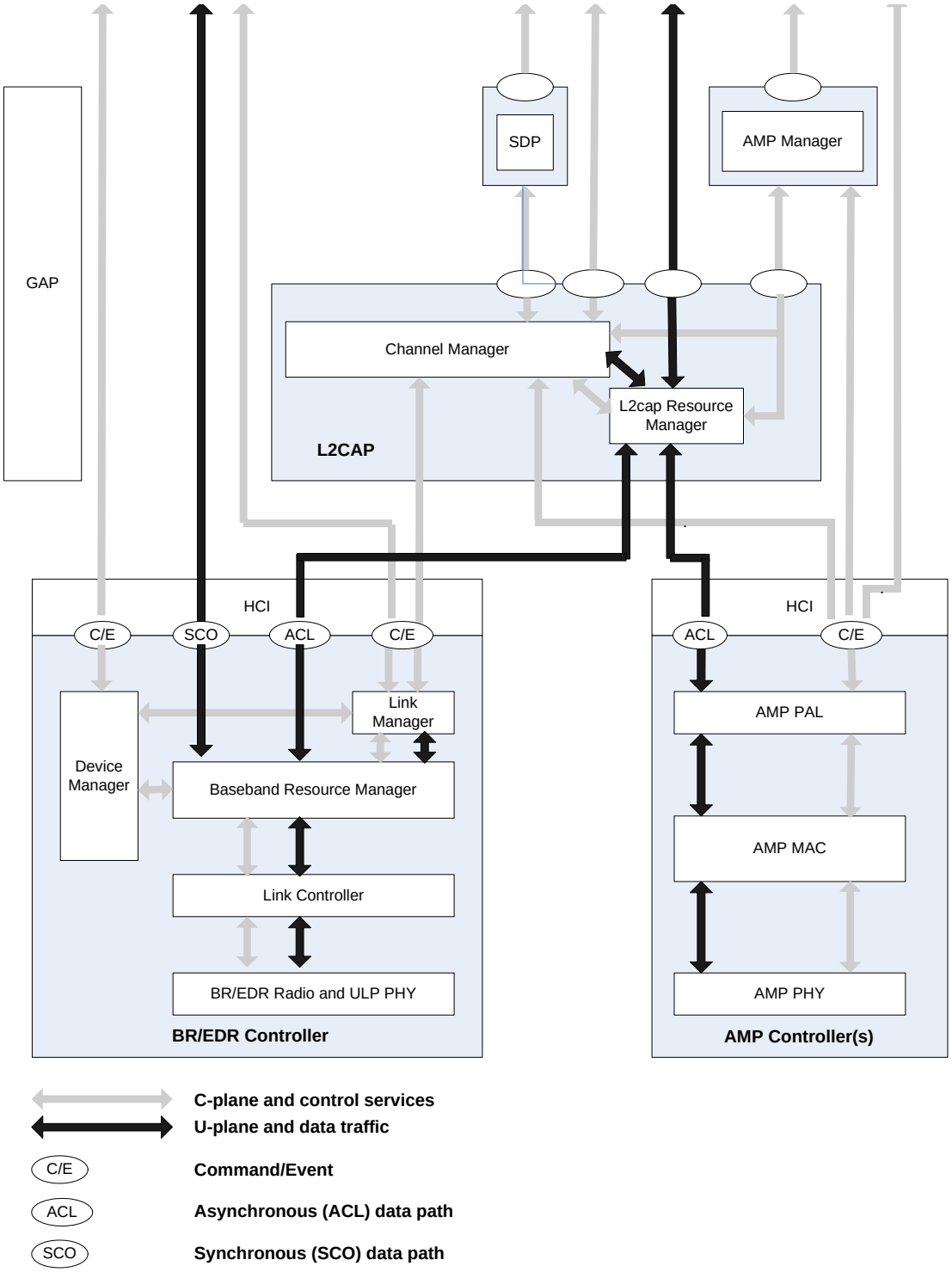

Figure 2.1: Bluetooth core system architecture

Figure 2.1 on page 24 shows the Core layers, each with its associated communication protocol. The Link Manager, Link Controller and BR/EDR Radio layers are known as the BR/EDR controller. An AMP PAL, AMP MAC, and AMP PHY are known as an AMP Controller. This is a common implementation involving a standard physical communications interface between the Controller and remainder of the Bluetooth system including the L2CAP, service and

higher layers (known as the Bluetooth host.) Although this interface is optional the architecture is designed to allow for its existence and characteristics. The Bluetooth specification enables interoperability between independent Bluetooth systems by defining the protocol messages exchanged between equivalent layers, and also interoperability between independent Bluetooth subsystems by defining a common interface between Bluetooth controllers and Bluetooth hosts.

A number of functional blocks and the path of services and data between them are shown. The functional blocks shown in the diagram are informative; in general the Bluetooth specification does not define the details of implementations except where this is required for interoperability. Thus the functional blocks in Figure 2.1 on page 24 are shown in order to aid description of the system behavior. An implementation may be different from the system shown in Figure 2.1 on page 24.

Standard interactions are defined for all inter-device operation, where Bluetooth devices exchange protocol signaling according to the Bluetooth specification. The Bluetooth core system protocols are the Radio (RF) protocol, Link Control (LC) protocol, Link Manager (LM) protocol, AMP PAL, Logical Link Control and Adaptation protocol (L2CAP), and AMP Manager Protocol, all of which are fully defined in subsequent parts of the Bluetooth specification. In addition, the Service Discovery Protocol (SDP) is a service layer protocol required by all Bluetooth applications.

The Bluetooth core system offers services through a number of service access points that are shown in the diagram as ellipses. These services consist of the basic primitives that control the Bluetooth core system. The services can be split into three types. There are device control services that modify the behavior and modes of a Bluetooth device, transport control services that create, modify and release traffic bearers (channels and links), and data services that are used to submit data for transmission over traffic bearers. It is common to consider the first two as belonging to the C-plane and the last as belonging to the U-plane.

A service interface to the Bluetooth Controller subsystem is defined such that the BR/EDR controller may be considered a standard part. In this configuration the Bluetooth Controller operates the lowest three layers and the L2CAP layer is contained with the rest of the Bluetooth application in a host system. The standard interface is called the Host Controller Interface (HCI) and its service access points are represented by the ellipses on the upper edge of the Bluetooth controller subsystem in Figure 2.1 on page 24. Implementation of this standard service interface is optional.

As the Bluetooth architecture is defined with the possibility of separate host and controller(s) communicating through one or more HCI transports, a number of general assumptions are made. Bluetooth controllers are assumed to have limited data buffering capabilities in comparison with the host. Therefore the L2CAP layer is expected to carry out some simple resource management

when submitting L2CAP PDUs to the controller for transport to a peer device. This includes segmentation of L2CAP SDUs into more manageable PDUs and then the fragmentation of PDUs into start and continuation packets of a size suitable for the controller buffers, and management of the use of controller buffers to ensure availability for channels with Quality of Service (QoS) commitments.

The BR/EDR Baseband and AMP MAC layers provides the basic ARQ protocol in Bluetooth. The L2CAP layer can optionally provide a further error detection and retransmission to the L2CAP PDUs. This feature is recommended for applications with requirements for a low probability of undetected errors in the user data. A further optional feature of L2CAP is a window-based flow control that can be used to manage buffer allocation in the receiving device. Both of these optional features augment the QoS performance in certain scenarios.

Although these assumptions may not be required for embedded Bluetooth implementations that combine all layers in a single system, the general architectural and QoS models are defined with these assumptions in mind, in effect a lowest common denominator.

Automated conformance testing of implementations of the Bluetooth core system is required. This is achieved by allowing the tester to control the implementation through the RF interface, which is common to all Bluetooth systems, and through the Test Control Interface (TCI), which is only required for conformance testing.

The tester uses exchanges with the Implementation Under Test (IUT) through the RF interface to ensure the correct responses to requests from remote devices. The tester controls the IUT through the TCI to cause the IUT to originate exchanges through the RF interface so that these can also be verified as conformant.

The TCI uses a different command-set (service interface) for the testing of each architectural layer and protocol. A subset of the HCI command-set is used as the TCI service interface for each of the layers and protocols within the BR/EDR Controller subsystem. A separate service interface is used for testing the L2CAP layer and protocol. As an L2CAP service interface is not defined in the Bluetooth core specification it is defined separately in the Test Control Interface specification. Implementation of the L2CAP service interface is only required for conformance testing.

2.1 CORE ARCHITECTURAL BLOCKS

This section describes the function and responsibility of each of the blocks shown in Figure 2.1 on page 24. An implementation is not required to follow the architecture described above, though every implementation shall conform to the protocol specifications described in subsequent parts of the Bluetooth specification, and shall implement the behavioral aspects of the system outlined below and specified in subsequent parts of the Bluetooth specification.

2.1.1 Host Architectural Blocks

2.1.1.1 Channel manager

The channel manager is responsible for creating, managing and destroying L2CAP channels for the transport of service protocols and application data streams. The channel manager uses the L2CAP protocol to interact with a channel manager on a remote (peer) device to create these L2CAP channels and connect their endpoints to the appropriate entities. The channel manager interacts with its local link manager or an AMP PAL to create new logical links (if necessary) and to configure these links to provide the required quality of service for the type of data being transported.

2.1.1.2 L2CAP resource manager

The L2CAP resource manager block is responsible for managing the ordering of submission of PDU fragments to the baseband and some relative scheduling between channels to ensure that L2CAP channels with QoS commitments are not denied access to the physical channel due to Controller resource exhaustion. This is required because the architectural model does not assume that a Controller has limitless buffering, or that the HCI is a pipe of infinite bandwidth.

L2CAP Resource Managers may also carry out traffic conformance policing to ensure that applications are submitting L2CAP SDUs within the bounds of their negotiated QoS settings. The general Bluetooth data transport model assumes well-behaved applications, and does not define how an implementation is expected to deal with this problem.

2.1.1.3 AMP Manager Protocol

The AMP manager is a layer that uses L2CAP to communicate to a peer AMP Manager on a remote device. It also interfaces directly to the AMP PAL for AMP control purposes. The AMP manager is responsible for discovering remote AMP(s) and determining their availability. It collects relevant remote AMP(s) information. This information is used to set up and manage AMP physical links. The AMP manager uses a dedicated L2CAP signaling channel to communicate with remote AMP manager(s).

2.1.2 BR/EDR Controller Architectural Blocks

2.1.2.1 Device Manager

The device manager is the functional block in the baseband that controls the general behavior of the Bluetooth device. It is responsible for all operation of the Bluetooth system that is not directly related to data transport, such as inquiring for the presence of other nearby Bluetooth devices, connecting to other Bluetooth devices, or making the local Bluetooth device discoverable or connectable by other devices.

The device manager requests access to the transport medium from the baseband resource controller in order to carry out its functions.

The device manager also controls local device behavior implied by a number of the HCI commands, such as managing the device local name, any stored link keys, and other functionality.

2.1.2.2 Link Manager

The link manager is responsible for the creation, modification and release of logical links (and, if required, their associated logical transports), as well as the update of parameters related to physical links between devices. The link manager achieves this by communicating with the link manager in remote Bluetooth devices using the Link Management Protocol (LMP.)

The LM protocol allows the creation of new logical links and logical transports between devices when required, as well as the general control of link and transport attributes such as the enabling of encryption on the logical transport, the adapting of transmit power on the physical link, or the adjustment of QoS settings for a logical link.

2.1.2.3 Baseband Resource Manager

The baseband resource manager is responsible for all access to the radio medium. It has two main functions. At its heart is a scheduler that grants time on the physical channels to all of the entities that have negotiated an access contract. The other main function is to negotiate access contracts with these entities. An access contract is effectively a commitment to deliver a certain QoS that is required in order to provide a user application with an expected performance.

The access contract and scheduling function must take account of any behavior that requires use of the BR/EDR Controller. This includes (for example) the normal exchange of data between connected devices over logical links, and logical transports, as well as the use of the radio medium to carry out inquiries, make connections, be discoverable or connectable, or to take readings from unused carriers during the use of adaptive frequency hopping mode.

In some cases the scheduling of a logical link results in changing to a different physical channel from the one that was previously used. This may be (for example) due to involvement in scatternet, a periodic inquiry function, or page scanning. When the physical channels are not time slot aligned, then the resource manager also accounts for the realignment time between slots on the original physical channel and slots on the new physical channel. In some cases the slots will be naturally aligned due to the same device clock being used as a reference for both physical channels.

2.1.2.4 Link Controller

The link controller is responsible for the encoding and decoding of Bluetooth packets from the data payload and parameters related to the physical channel, logical transport and logical link.

The link controller carries out the link control protocol signaling (in close conjunction with the scheduling function of the resource manager), which is used to communicate flow control and acknowledgement and retransmission request signals. The interpretation of these signals is a characteristic of the logical transport associated with the baseband packet. Interpretation and control of the link control signaling is normally associated with the resource manager's scheduler.

2.1.2.5 RF

The RF block is responsible for transmitting and receiving packets of information on the physical channel. A control path between the baseband and the RF block allows the baseband block to control the timing and frequency carrier of the RF block. The RF block transforms a stream of data to and from the physical channel and the baseband into required formats.

2.1.3 AMP Controller architectural blocks

2.1.3.1 AMP HCI

The AMP HCI is the logical interface between an AMP Controller and Host (L2CAP and AMP manager). HCI is an optional layer used when the Host and AMP Controller(s) are physically separated. Support for AMPs requires additional HCI commands and events. These new commands and events are related to AMP physical and logical link management, QoS, as well as flow control.

There is one logical instantiation of an HCI per AMP Controller, and another logical instantiation for the BR/EDR Controller. The physical HCI transport layer manages the multiplexing of several Controllers over the same physical transport bus in cases where multiple Controllers exist in a single physical unit.

2.1.3.2 AMP PAL

The AMP PAL is the AMP layer interfacing the AMP MAC with the Host (L2CAP and AMP Manager). It translates commands from the Host into the specific MAC service primitives and primitives into commands, and it translates primitives from the AMP MAC into understandable event(s) for the Host. The AMP PAL provides support for AMP channel management, data traffic according to specified flow specifications, and power efficiency.

There is not a requirement that the AMP PAL has exclusive access to the AMP itself. Implementers may choose to allow other protocols to be concurrent clients of the AMP. Specific mechanisms for allowing other protocols to share access to the AMP are outside the scope of this specification.

A generic PAL architecture is shown in Figure 2.2.

.

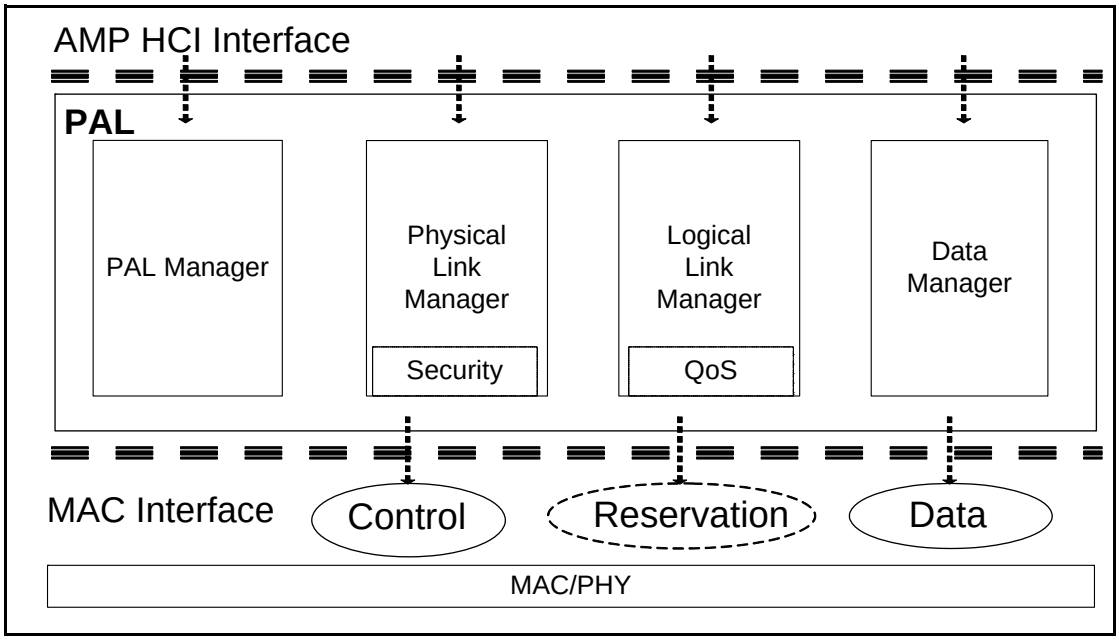

Figure 2.2: Generic PAL architecture

Capabilities of the PAL and the underlying MAC/PHY are exchanged via the AMP_Info and AMP_Assoc structures by the AMP Manager Protocol. The AMP_Info contains generic capabilities of the PAL such as bandwidth availability, maximum PDU size, PAL capabilities, length of the AMP_Assoc and flush timeout information. The contents of the AMP_Assoc are dependent on the PAL and are related to the underlying MAC/PHY

2.1.3.3 AMP MAC

The AMP MAC is the MAC layer as defined in the IEEE 802 reference layer model. It provides services such as addressing and mechanisms to control and access channels. The AMP MAC is in between AMP PHY and AMP PAL layers.

2.1.3.4 AMP PHY

The AMP PHY is the AMP physical layer.

3 DATA TRANSPORT ARCHITECTURE

The Bluetooth data transport system follows a layered architecture. This description of the Bluetooth system describes the Bluetooth core transport layers up to and including L2CAP channels. All Bluetooth operational modes follow the same generic transport architecture, which is shown in Figure 3.1 on page 31.

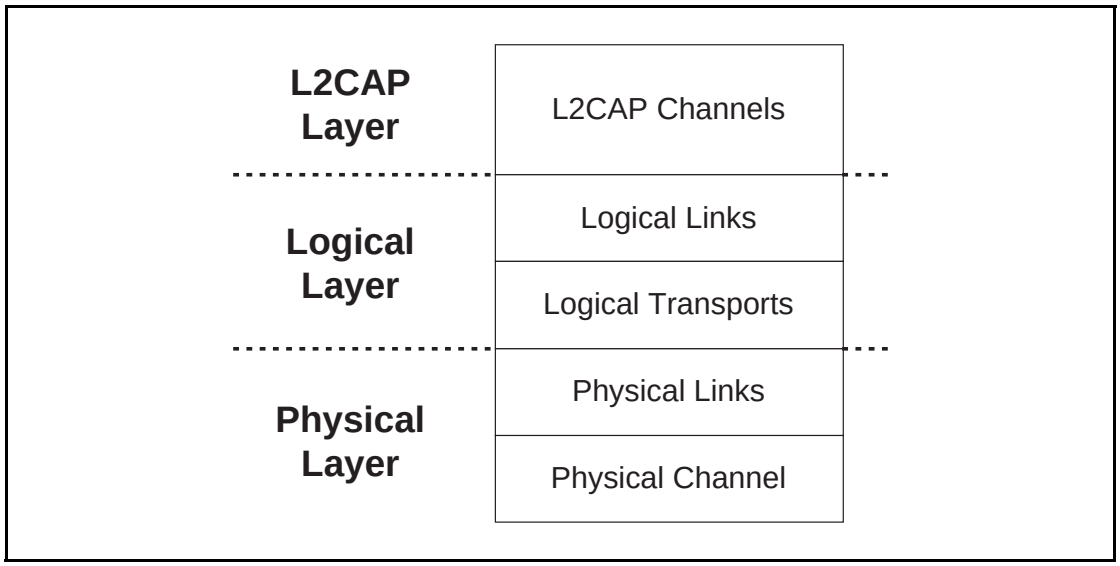

Figure 3.1: Bluetooth generic data transport architecture

For efficiency and legacy reasons, the Bluetooth transport architecture includes a sub-division of the logical layer, distinguishing between logical links and logical transports. This sub-division provides a general (and commonly understood) concept of a logical link that provides an independent transport between two or more devices. The logical transport sub-layer is required to describe the inter-dependence between some of the logical link types (mainly for reasons of legacy behavior.)

Prior to Version 1.2, the Bluetooth Core specification described the ACL and SCO links as physical links. With the addition of Extended SCO (eSCO) and for future expansion it is better to consider these as logical transport types, which more accurately encapsulates their purpose. However, they are not as independent as might be desired, due to their shared use of resources such as the LT_ADDR and acknowledgement/repeat request (ARQ) scheme. Hence the architecture is incapable of representing these logical transports with a single transport layer. The additional logical transport layer goes some way towards describing this behavior.

3.1 CORE TRAFFIC BEARERS

The Bluetooth core system provides a number of standard traffic bearers for the transport of service protocol and application data. These are shown in Figure 3.2 on page 32 below (for ease of representation this is shown with higher layers to the left and lower layers to the right).

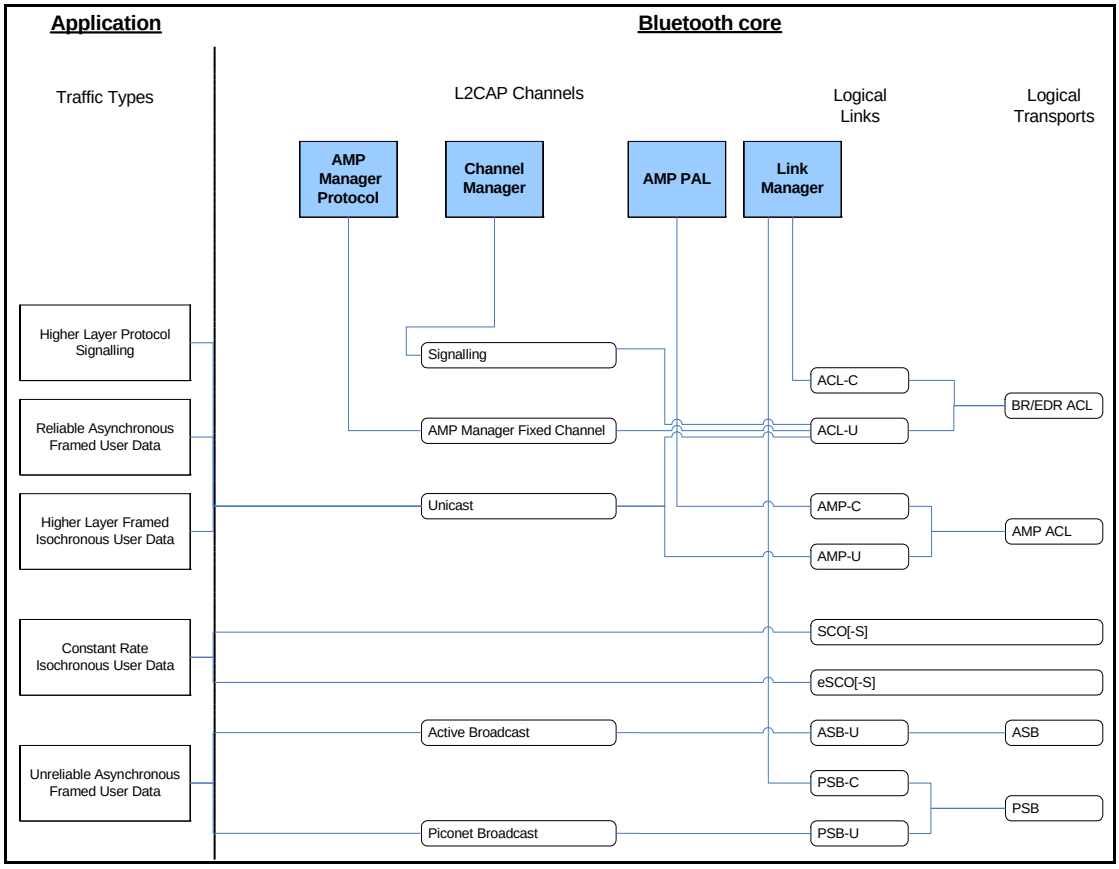

Figure 3.2: Bluetooth traffic bearers

The core traffic bearers that are available to applications are shown in Figure 3.2 on page 32 as the shaded rounded rectangles. The architectural layers that are defined to provide these services are described in Section 2 on page 23. A number of data traffic types are shown on the left of the diagram linked to the traffic bearers that are typically suitable for transporting that type of data traffic.

The logical links are named using the names of the associated logical transport and a suffix that indicates the type of data that is transported. (C for control links carrying LMP messages, U for L2CAP links carrying user data (L2CAP PDUs) and S for stream links carrying unformatted synchronous or isochronous data.) It is common for the suffix to be removed from the logical link without introducing ambiguity, thus a reference to the default ACL logical transport can be resolved to mean the ACL-C logical link in cases where the LMP protocol is being discussed, the AMP-C logical link in cases where a PAL protocol is being discussed, or the ACL-U or AMP-U logical links when the L2CAP layer is being discussed.

The mapping of application traffic types to Bluetooth core traffic bearers in Figure 3.2 on page 32 is based on matching the traffic characteristics with the bearer characteristics. It is recommended to use these mappings as they provide the most natural and efficient method of transporting the data with its given characteristics.

However, an application (or an implementation of the Bluetooth core system) may choose to use a different traffic bearer, or a different mapping to achieve a similar result. For example, in a piconet with only one slave, the master may choose to transport L2CAP broadcasts over the ACL-U logical link rather than over the ASB-U or PSB-U logical links. This will probably be more efficient in terms of bandwidth (if the physical channel quality is not too degraded.) Use of alternative transport paths to those in Figure 3.2 on page 32 is only acceptable if the characteristics of the application traffic type are preserved.

Figure 3.2 on page 32 shows a number of application traffic types. These are used to classify the types of data that may be submitted to the Bluetooth core system. The original data traffic type may not be the same as the type that is submitted to the Bluetooth core system if an intervening process modifies it. For example, video data is generated at a constant rate but an intermediate coding process may alter this to variable rate, e.g. by MPEG4 encoding. For the purposes of the Bluetooth core system, only the characteristic of the submitted data is of interest.

3.1.1 Framed data traffic

The L2CAP layer services provide a frame-oriented transport for asynchronous and isochronous user data. The application submits data to this service in variable-sized frames (up to a negotiated maximum for the channel) and these frames are delivered in the same form to the corresponding application on the remote device. There is no requirement for the application to insert additional framing information into the data, although it may do so if this is required (such framing is invisible to the Bluetooth core system.)

Connection-oriented L2CAP channels may be created for transport of unicast (point-to-point) data between two Bluetooth devices. Connection-oriented channels provide a context within which specific properties may be applied to data transported on the channel. For example, quality of service parameters or flow and error control modes may be applied. Connection-oriented L2CAP channels are created using the L2CAP connection procedure.

A connectionless L2CAP channel exists for broadcasting data or for transport of unicast data. In the case of piconet topologies the master device is always the source of broadcast data and the slave device(s) are the recipients. Broadcast traffic on the connectionless L2CAP channel is uni-directional. Unicast data sent on the connectionless L2CAP channels may be uni-directional or bi-directional. Unicast data sent on the L2CAP connectionless channel provides an alternate mechanism to send data with the same level of reliability as an L2CAP connection-oriented channel operating in Basic mode but without the additional latency incurred by opening an L2CAP connection-oriented channel.

L2CAP channels have an associated QoS setting that defines constraints on the delivery of the frames of data. These QoS settings may be used to indicate (for example) that the data is isochronous, and therefore has a limited lifetime after which it becomes invalid, or that the data should be delivered within a given time period, or that the data is reliable and should be delivered without error, however long this takes.

The L2CAP channel manager is responsible for arranging to transport the L2CAP channel data frames on an appropriate baseband logical link, possibly multiplexing this onto the baseband logical link with other L2CAP channels with similar characteristics.

3.1.2 Unframed data traffic

If the application does not require delivery of data in frames, possibly because it includes in-stream framing, or because the data is a pure stream, then it may avoid the use of L2CAP channels and make direct use of a baseband logical link.

The Bluetooth core system supports the direct transport of application data that is isochronous and of a constant rate (either bit-rate, or frame-rate for pre-framed data), using a SCO-S or eSCO-S logical link. These logical links reserve physical channel bandwidth and provide a constant rate transport locked to the piconet clock. Data is transported in fixed size packets at fixed intervals with both of these parameters negotiated during channel establishment. eSCO links provide a greater choice of bit-rates and also provide greater reliability by using limited retransmission in case of error. Enhanced Data Rate operation is supported for eSCO, but not for SCO logical transports. SCO and eSCO logical transports do not support multiplexed logical links or any further layering within the Bluetooth core. An application may choose to layer a number of streams within the submitted SCO/eSCO stream, provided that the submitted stream is, or has the appearance of being, a constant rate stream.

The application chooses the most appropriate type of logical link from those available at the baseband, and creates and configures it to transport the data stream, and releases it when completed. (The application will normally also use a framed L2CAP unicast channel to transport its C-plane information to the peer application on the remote device.)

If the application data is isochronous and of a variable rate, then this may only be carried by the L2CAP unicast channel, and hence will be treated as framed data.

3.1.3 Reliability of traffic bearers

3.1.3.1 BR/EDR reliability

Bluetooth is a wireless communications system. In poor RF environments, this system should be considered inherently unreliable. To counteract this the system provides levels of protection at each layer. The baseband packet header uses forward error correcting (FEC) coding to allow error correction by the receiver and a header error check (HEC) to detect errors remaining after correction. Certain Baseband packet types include FEC for the payload. Furthermore, some Baseband packet types include a cyclic redundancy error check (CRC).

On ACL logical transports the results of the error detection algorithm are used to drive a simple acknowledgement/repeat request (ARQ) protocol. This provides an enhanced reliability by re-transmitting packets that do not pass the receiver's error checking algorithm. It is possible to modify this scheme to support latency-sensitive packets by discarding an unsuccessfully transmitted packet at the transmitter if the packet's useful life has expired. eSCO links use a modified version of this scheme to improve reliability by allowing a limited number of retransmissions.

The resulting reliability gained by this ARQ scheme is only as dependable as the ability of the HEC and CRC codes to detect errors. In most cases this is sufficient, however it has been shown that for the longer packet types the probability of an undetected error is too high to support typical applications, especially those with a large amount of data being transferred.

The L2CAP layer provides an additional level of error control that is designed to detect the occasional undetected errors in the baseband layer and request retransmission of the affected data. This provides the level of reliability required by typical Bluetooth applications.

Broadcast links have no feedback route, and are unable to use the ARQ scheme (although the receiver is still able to detect errors in received packets.) Instead each packet is transmitted several times in the hope that the receiver is able to receive at least one of the copies successfully. Despite this approach there are still no guarantees of successful receipt, and so these links are considered unreliable.

In summary, if a link or channel is characterized as reliable this means that the receiver is capable of detecting errors in received packets and requesting retransmission until the errors are removed. Due to the error detection system used some residual (undetected) errors may still remain in the received data. For L2CAP channels the level of these is comparable to other communication systems, although for logical links the residual error level is somewhat higher.

The transmitter may remove packets from the transmit queue such that the receiver does not receive all the packets in the sequence. If this happens detection of the missing packets is delegated to the L2CAP layer.

On an unreliable link the receiver is capable of detecting errors in received packets but cannot request retransmission. The packets passed on by the receiver may be without error, but there is no guarantee that all packets in the sequence are received. Hence the link is considered fundamentally unreliable. There are limited uses for such links, and these uses are normally dependent on the continuous repetition of data from the higher layers while it is valid.

Stream links have a reliability characteristic somewhere between a reliable and an unreliable link, depending on the current operating conditions.

3.1.3.2 AMP reliability

The reliability of each AMP depends on the underlying MAC/PHY technology. Some AMPs do not ever flush user traffic unless marked as flushable whereas other AMPs do flush user traffic.

The Bluetooth Core maintains a level of reliability for protocols and profiles above the Core by mandating the use of Enhanced Retransmission Mode or Streaming Mode for any L2CAP channel used over the AMP.

3.2 TRANSPORT ARCHITECTURE ENTITIES

The Bluetooth transport architecture entities are shown in Figure 3.3 on page 37 and are described from the lowest layer upwards in the subsequent sections.

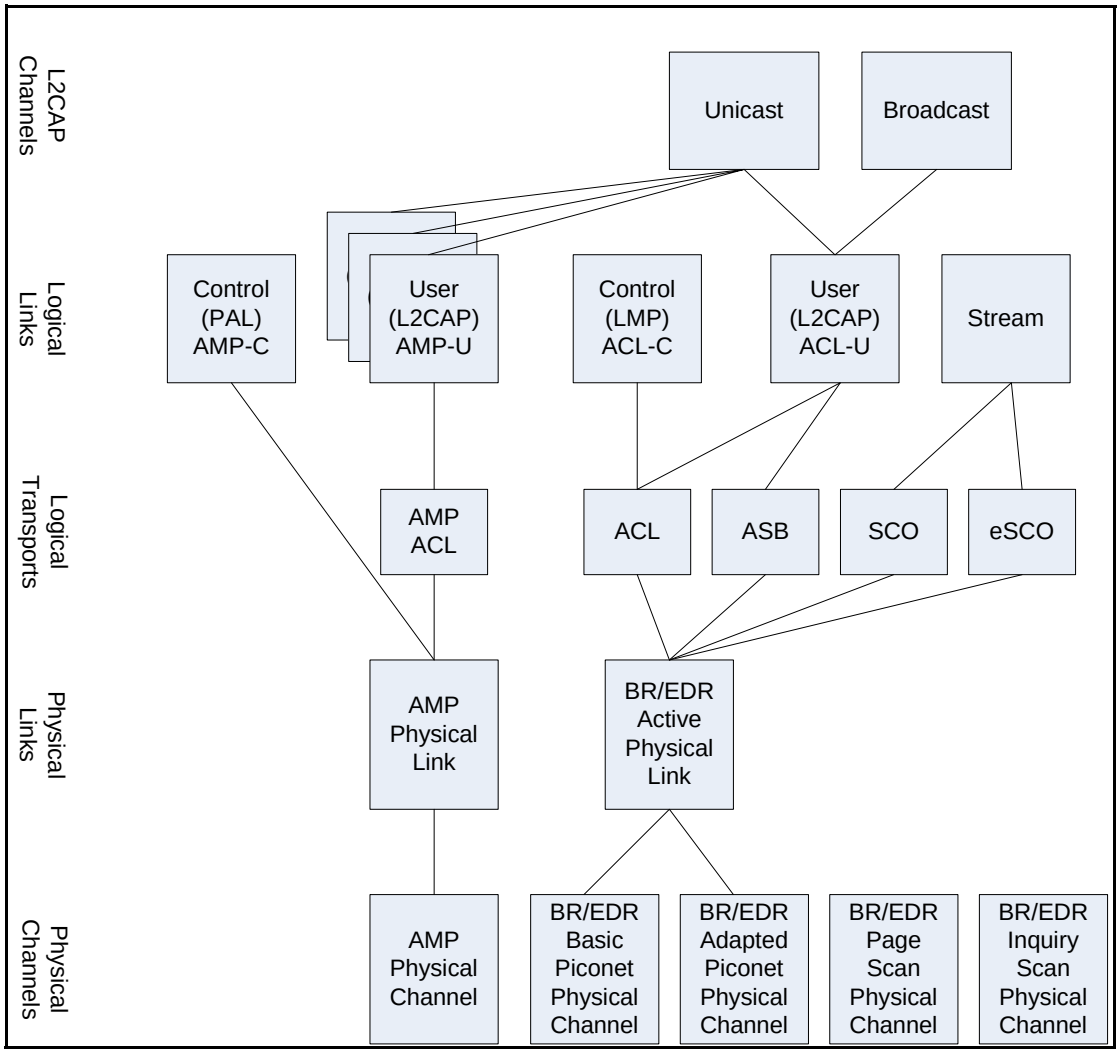

Figure 3.3: Overview of transport architecture entities and hierarchy

3.2.1 BR/EDR generic packet structure

The general packet structure nearly reflects the architectural layers found in the Bluetooth system. The BR/EDR packet structure is designed for optimal use in normal operation. It is shown in Figure 3.4 on page 38.

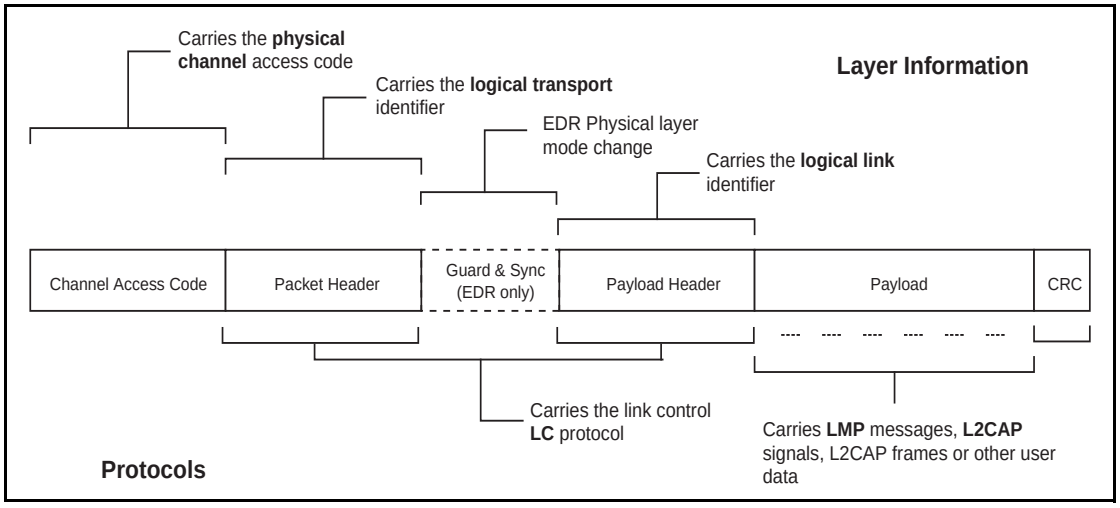

Figure 3.4: BR/EDR packet structure

Packets normally only include the fields that are necessary to represent the layers required by the transaction. Thus a simple inquiry request over an inquiry scan physical channel does not create or require a logical link or higher layer and therefore consists only of the channel access code (associated with the physical channel.) General communication within a piconet uses packets that include all of the fields, as all of the architectural layers are used.

All packets include the channel access code. This is used to identify communications on a particular physical channel, and to exclude or ignore packets on a different physical channel that happens to be using the same RF carrier in physical proximity.

There is no direct field within the BR/EDR packet structure that represents or contains information relating to physical links. This information is implied in the logical transport address (LT_ADDR) carried in the packet header.

Most BR/EDR packets include a packet header. The packet header is always present in packets transmitted on physical channels that support physical links, logical transports and logical links. The packet header carries the LT_ADDR, which is used by each receiving device to determine if the packet is addressed to the device and is used to route the packet internally.

The BR/EDR packet header also carries part of the link control (LC) protocol that is operated per logical transport (except for ACL and SCO transports that operate a shared LC protocol carried on either logical transport.)

The Enhanced Data Rate (EDR) packets have a guard time and synchronization sequence before the payload. This is a field used for physical layer change of modulation scheme.

The payload header is present in all packets on logical transports that support multiple logical links. The payload header includes a logical link identifier field used for routing the payload, and a field indicating the length of the payload.

Some packet types also include a CRC after the packet payload that is used to detect most errors in received packets.

EDR packets have a trailer after the CRC.

The packet payload is used to transport the user data. The interpretation of this data is dependent on the logical transport and logical link identifiers. For ACL logical transports Link Manager Protocol (LMP) messages and L2CAP signals are transported in the packet payload, along with general user data from applications. For SCO and eSCO logical transports the payload contains the user data for the logical link.

3.3 PHYSICAL CHANNELS

The lowest architectural layer in the Bluetooth system is the physical channel. A number of types of physical channel are defined. All Bluetooth physical channels are characterized by an RF frequency combined with temporal parameters and restricted by spatial considerations. For the basic and adapted piconet physical channels frequency hopping is used to change frequency periodically to reduce the effects of interference and for regulatory reasons.

Two Bluetooth devices use a shared physical channel for communication. To achieve this their transceivers need to be tuned to the same RF frequency at the same time, and they need to be within a nominal range of each other.

Given that the number of RF carriers is limited and that many Bluetooth devices may be operating independently within the same spatial and temporal area there is a strong likelihood of two independent Bluetooth devices having their transceivers tuned to the same RF carrier, resulting in a physical channel collision. To mitigate the unwanted effects of this collision each transmission on a physical channel starts with an access code that is used as a correlation code by devices tuned to the physical channel. This channel access code is a property of the physical channel. The access code is always present at the start of every transmitted packet.

Five Bluetooth physical channels are defined. Each is optimized and used for a different purpose. Two of these physical channels (the basic piconet channel and adapted piconet channel) are used for communication between connected devices and are associated with a specific piconet. The remaining BR/EDR physical channels are used for discovering Bluetooth devices and for connecting Bluetooth devices. In BR/EDR this is accomplished through the use of inquiry scan and page scan channels respectively. The fifth channel is used for AMP communication.

A Bluetooth device can only use one of these BR/EDR physical channels at any given time. In order to support multiple concurrent operations the device uses time-division multiplexing between the channels. In this way a Bluetooth device can appear to operate simultaneously in several piconets, as well as being discoverable and connectable.

Whenever a Bluetooth device is synchronized to the timing, frequency and access code of a physical channel it is said to be ‘connected’ to this channel (whether or not it is actively involved in communications over the channel.) The Bluetooth specification assumes that a device is only capable of connecting to one physical channel at any time. Advanced devices be may capable of connecting simultaneously to more than one physical channel, but the specification does not assume that this is possible.

3.3.1 BR/EDR Physical Channels

3.3.1.1 Basic piconet channel

3.3.1.1.1 Overview

The basic piconet channel is used for communication between connected devices during normal operation.

3.3.1.1.2 Characteristics

The basic piconet channel is characterized by a pseudo-random sequence hopping through the RF channels. The hopping sequence is unique for the piconet and is determined by the Bluetooth device address of the master. The phase in the hopping sequence is determined by the Bluetooth clock of the master. All Bluetooth devices participating in the piconet are time- and hop-synchronized to the channel.

The channel is divided into time slots where each slot corresponds to an RF hop frequency. Consecutive hops correspond to different RF hop frequencies. The time slots are numbered according to the Bluetooth clock of the piconet master. Packets are transmitted by Bluetooth devices participating in the piconet aligned to start at a slot boundary. Each packet starts with the channel's access code, which is derived from the Bluetooth device address of the piconet.

On the basic piconet channel the master controls access to the channel. The master starts its transmission in even-numbered time slots only. Packets transmitted by the master are aligned with the slot start and define the piconet timing. Packets transmitted by the master may occupy up to five time slots depending on the packet type.

Each master transmission is a packet carrying information on one of the logical transports. Slave devices may transmit on the physical channel in response. The characteristics of the response are defined by the logical transport that is addressed.

For example on the asynchronous connection-oriented logical transport the addressed slave device responds by transmitting a packet containing information for the same logical transport that is nominally aligned with the next (odd-numbered) slot start. Such a packet may occupy up to five time slots, depending on the packet type. On a broadcast logical transport no slaves are allowed to respond.

A special characteristic of the basic piconet physical channel is the use of some reserved slots to transmit a beacon train. The beacon train is only used if the piconet physical channel has parked slaves connected to it. In this situation the master transmits a packet in the reserved beacon train slots (these packets

are used by the slave to resynchronize to the piconet physical channel.) The master may transmit packets from any logical transport onto these slots, providing there is a transmission starting in each of the slots. In the case where there is information from the parked slave broadcast (PSB) logical transport to be transmitted then this is transmitted in the beacon train slots and takes priority over any other logical transport.

3.3.1.1.3 Topology

A basic piconet channel may be shared by any number of Bluetooth devices, limited only by the resources available on the piconet master device. Only one device is the piconet master, all others being piconet slaves. All communication is between the master and slave devices. There is no direct communication between slave devices on the piconet channel.

There is, however, a limitation on the number of logical transports that can be supported within a piconet. This means that although there is no theoretical limit to the number of Bluetooth devices that share a channel there is a limit to the number of these devices that can be actively involved in exchanging data with the master.

3.3.1.1.4 Supported layers

The basic piconet channel supports a number of physical links, logical transports, logical links and L2CAP channels used for general purpose communications.

3.3.1.2 Adapted piconet channel

3.3.1.2.1 Overview

The adapted piconet channel differs from the basic piconet channel in two ways. First the frequencies on which the slaves transmit are the same as the preceding master transmit frequency. In other words the frequency is not recomputed between master and subsequent slave packets. The second way in which the adapted piconet channel differs from the basic piconet channel is that the adapted type can be based on fewer than the full 79 frequencies. A number of frequencies may be excluded from the hopping pattern by being marked as “unused”. The remainder of the 79 frequencies are included. The two sequences are the same except that whenever the basic pseudo-random hopping sequence would have selected an unused frequency it is replaced with an alternative chosen from the used set.

Because the adapted piconet channel uses the same timing and access code as the basic piconet channel, the two channels are often coincident. This pro-

vides a deliberate benefit as it allows slaves in either the basic piconet channel or the adapted piconet channel to adjust their synchronization to the master.

The topology and supported layers of the adapted piconet physical channel are identical to the basic piconet physical channel.

3.3.1.3 Inquiry scan channel

3.3.1.3.1 Overview

In order for a device to be discovered an inquiry scan channel is used. A discoverable device listens for inquiry requests on its inquiry scan channel and then sends responses to these requests. In order for a device to discover other devices, it iterates (hops) through all possible inquiry scan channel frequencies in a pseudo-random fashion, sending an inquiry request on each frequency and listening for any response.

3.3.1.3.2 Characteristics

Inquiry scan channels follow a slower hopping pattern and use an access code to distinguish between occasional occupancy of the same radio frequency by two co-located devices using different physical channels.

The access code used on the inquiry scan channel is taken from a reserved set of inquiry access codes that are shared by all Bluetooth devices. One access code is used for general inquiries, and a number of additional access codes are reserved for limited inquiries. Each device has access to a number of different inquiry scan channels. As all of these channels share an identical hopping pattern, a device may concurrently occupy more than one inquiry scan channel if it is capable of concurrently correlating more than one access code.

A device using one of its inquiry scan channels remains passive until it receives an inquiry message on this channel from another Bluetooth device. This is identified by the appropriate inquiry access code. The inquiry scanning device will then follow the inquiry response procedure to return a response to the inquiring device.

In order for a device to discover other Bluetooth devices it uses the inquiry scan channel of these devices in order to send inquiry requests. As it has no prior knowledge of the devices to discover, it cannot know the exact characteristics of the inquiry scan channel.

The device takes advantage of the fact that inquiry scan channels have a reduced number of hop frequencies and a slower rate of hopping. The inquiring device transmits inquiry requests on each of the inquiry scan hop frequencies and listens for an inquiry response. This is done at a faster rate, allowing the

inquiring device to cover all inquiry scan frequencies in a reasonably short time period.

3.3.1.3.3 Topology

Inquiring and discoverable devices use a simple exchange of packets to fulfill the inquiring function. The topology formed during this transaction is a simple and transient point-to-point connection.

3.3.1.3.4 Supported layers

During the exchange of packets between an inquiring and discoverable device it may be considered that a temporary physical link exists between these devices. However, the concept is quite irrelevant as it has no physical representation but is only implied by the brief transaction between the devices. No further architectural layers are considered to be supported.

3.3.1.4 Page scan channel

3.3.1.4.1 Overview

A connectable device (one that is prepared to accept connections) does so using a page scan channel. A connectable device listens for page requests on its page scan channel and enters into a sequence of exchanges with this device. In order for a device to connect to another device, it iterates (hops) through all page scan channel frequencies in a pseudo-random fashion, sending a page request on each frequency and listening for any response.

3.3.1.4.2 Characteristics

The page scan channel uses an access code derived from the scanning device's Bluetooth device address to identify communications on the channel. The page scan channel uses a slower hopping rate than the hop rate of the basic and adapted piconet channels. The hop selection algorithm uses the Bluetooth device clock of the scanning device as an input.

A device using its page scan channel remains passive until it receives a page request from another Bluetooth device. This is identified by the page scan channel access code. The two devices will then follow the page procedure to form a connection. Following a successful conclusion of the page procedure both devices switch to the basic piconet channel that is characterized by having the paging device as master.

In order for a device to connect to another Bluetooth device it uses the page scan channel of the target device in order to send page requests. If the paging device does not know the phase of the target device's page scan channel it

therefore does not know the current hop frequency of the target device. The paging device transmits page requests on each of the page scan hop frequencies and listens for a page response. This is done at a faster hop rate, allowing the paging device to cover all page scan frequencies in a reasonably short time period.

The paging device may have some knowledge of the target device's Bluetooth clock (indicated during a previous inquiry transaction between the two devices, or as a result of a previous involvement in a piconet with the device), in which case it is able to predict the phase of the target device's page scan channel. It may use this information to optimize the synchronization of the paging and page scanning process and speed up the formation of the connection.

3.3.1.4.3 Topology

Paging and connectable devices use a simple exchange of packets to fulfill the paging function. The topology formed during this transaction is a simple and transient point-to-point connection.

3.3.1.4.4 Supported layers

During the exchange of packets between a paging and connectable device it may be considered that a temporary physical link exists between these devices. However, the concept is quite irrelevant as it has no physical representation but is only implied by the brief transaction between the devices. No further architectural layers are considered to be supported.

3.3.2 AMP physical channel

3.3.2.1 Overview

An AMP physical channel is used for communication between connected devices during normal operation. It is used in parallel with an adapted piconet channel between the associated BR/EDR Controllers.

3.3.2.2 Characteristics

The AMP physical channel characteristics depend on the referenced MAC and PHY. See Volume 5 for the referenced MAC and PHY for each PAL.

3.3.2.3 Topology

An AMP physical channel may be shared by any number of Bluetooth devices, limited only by the resources available on the piconet BR/EDR master device and the number of LT_ADDRs available. Roles within the AMP physical chan-

nel are not used. All communication is between the BR/EDR piconet master and a single BR/EDR piconet slave. There is no direct communication between BR/EDR piconet slave devices over the AMP physical channel.

Although there is no theoretical limit to the number of Bluetooth devices that can share an AMP physical channel, similar to the basic and adapted piconet channels, there is a limit to the number of these devices that can be actively involved in exchanging data with the master.

3.3.2.4 Supported layers

The AMP physical channel supports a number of physical links, logical transports, logical links and L2CAP channels used for general purpose communications.

3.4 PHYSICAL LINKS

A physical link represents a baseband connection between Bluetooth devices. A physical link is always associated with exactly one physical channel (although a physical channel may support more than one physical link.) Within the Bluetooth system a physical link is a virtual concept that has no direct representation within the structure of a transmitted packet.

In BR/EDR the access code packet field, together with the clock and address of the master Bluetooth device are used to identify a physical channel. However there is no subsequent part of the packet that directly identifies the physical link. Instead the physical link may be identified by association with the logical transport, as each logical transport is only received on one physical link.

Some physical link types have properties that may be modified. An example of this is the transmit power for the link. Other physical link types have no such properties. In the case of physical links with modifiable properties the LM protocol (BR/EDR) is used to adapt these properties. As the LM protocol (BR/EDR) is supported at a higher layer (by a logical link) the appropriate physical link is identified by implication from the logical link that transports the LM signaling.

In the situation where a transmission is broadcast over a number of different physical links, then the transmission parameters are selected to be suitable for all of the physical links.

3.4.1 BR/EDR Links supported by the basic and adapted piconet physical channel

The basic and adapted piconet physical channels support a physical link which may be active or parked. The physical link is a point-to-point link between the master and a slave. It is always present when the slave is synchronized in the piconet.

3.4.1.1 Active physical link

The physical link between a master and a slave device is active if a default ACL logical transport exists between the devices. Active physical links have no direct identification of their own, but are identified by association with the default ACL logical transport ID with which there is a one-to-one correspondence.

An active physical link has the associated properties of radio transmit power in each direction. Transmissions from slave devices are always directed over the active physical link to the master, and use the transmit power that is a property of this link in the slave to master direction. Transmissions from the master may be directed over a single active physical link (to a specific slave) or over a number of physical links (to a group of slaves in the piconet.) In the case of point-to-point transmissions the master uses the appropriate transmit power for the physical link in question. (In the case of point-to-multipoint transmissions the master uses a transmit power appropriate for the set of devices addressed.)

Active physical links may be placed into Hold or Sniff mode. The effect of these modes is to modify the periods when the physical link is active and may carry traffic. Logical transports that have defined scheduling characteristics are not affected by these modes and continue according to their pre-defined scheduling behavior. The default ACL logical transport and other links with undefined scheduling characteristics are subject to the mode of the active physical link.

3.4.1.2 Parked physical link

The physical link between a master and a slave device is parked when the slave remains synchronized in the piconet, but has no default ACL logical transport. Such a slave is also said to be parked. A beacon train is used to provide regular synchronization to all parked slaves connected to the piconet physical channel. A parked slave broadcast (PSB) logical transport is used to allow communication of a subset of LMP signaling and broadcast L2CAP to parked slaves. The PSB logical transport is closely associated with the beacon train.

A slave is parked (its active link is changed to a parked link) using the park procedure. The master is not allowed to park a slave that has any user created logical transport supported by the physical link. These logical transports are first removed, and any L2CAP channels that are built on these logical transports are also removed. The broadcast logical transport and default ACL logical transports are not considered as user created and are not explicitly removed. When the active link is replaced with a parked link the default ACL logical transport is implicitly removed. The supported logical links and L2CAP channels remain in existence, but become suspended. It is not possible to use these links and L2CAP channels to transport signaling or data while the active link is absent.

A parked slave may become active using the unpark procedure. This procedure is requested by the slave at an access window and initiated by the master.

Following the unpark procedure the parked physical link is changed to an active physical link and the default ACL logical transport is re-created. L2CAP channels that were suspended during the most recent park procedure are associated with the new default ACL logical transport and become active again.

Parked links do not support radio power control, as there is no feedback path from parked slaves to the piconet master that can be used to signal received signal strength at the slave or for the master to measure received signal strength from the slave. Transmissions are carried out at nominal power on parked links.

Parked links use the same physical channel as their associated active link. If a master manages a piconet that contains parked slaves using the basic piconet physical channel and also parked slaves using the adapted piconet physical channel then it must create a parked slave broadcast logical transport (and associated transport) for each of these physical channels.

A parked slave may use the inactive periods of the parked slave broadcast logical transport to save power, or it may carry out activities on other physical channels unrelated to the piconet within which it is parked.

3.4.2 Links Supported by the Scanning Physical Channels

In the case of the inquiry scan and page scan channels the physical link exists for a relatively short time and cannot be controlled or modified in any way. These types of physical link are not further elaborated.

3.4.3 Links Supported by the AMP Physical Channels

An AMP physical link is always associated with exactly one AMP physical channel (although an AMP physical channel may support more than one AMP physical link). The AMP physical link is a point-to-point link between two PALs. The characteristics of an AMP physical link depend on the underlying AMP technology.

3.5 LOGICAL LINKS AND LOGICAL TRANSPORTS

A variety of logical links are available to support different application data transport requirements. Each logical link is associated with a logical transport, which has a number of characteristics. These characteristics include flow control, acknowledgement/repeat mechanisms, sequence numbering and scheduling behavior. Logical transports are able to carry different types of logical links (depending on the type of the logical transport). In the case of some of the Bluetooth logical links these are multiplexed onto the same logical transport. Logical transports may be carried by active physical links on either the basic or the adapted piconet physical channel.

Logical transport identification and real-time (link control) signaling are carried in the packet header, and for some logical links identification is carried in the payload header. Control signaling that does not require single slot response times is carried out using the LMP protocol.

Table 3.1 on page 49 lists all of the logical transport types, the supported logical link types, which type of physical links and physical channels can support them, and a brief description of the purpose of the logical transport.

Logical transport	Links supported	Supported by	Bearer	Overview
Asynchronous Connection-Oriented (ACL)	Control (LMP) ACL-C or (PAL) AMP-C User (L2CAP) ACL-U or AMP-U	Active physical link, basic or adapted physical channel, AMP physical channel.	BR/EDR, AMP	Reliable or time-bounded, bi-directional, point-to-point.
Synchronous Connection-Oriented (SCO)	Stream (unframed) SCO-S	Active physical link, basic or adapted physical channel	BR/EDR	Bi-directional, symmetric, point-to-point, AV channels. Used for 64Kb/s constant rate data.
Extended Synchronous Connection-Oriented (eSCO)	Stream (unframed) eSCO-S	Active physical link, basic or adapted physical channel	BR/EDR	Bi-directional, symmetric or asymmetric, point-to-point, general regular data, limited retransmission. Used for constant rate data synchronized to the master Bluetooth clock.
Active slave broadcast (ASB)	User (L2CAP) ASB-U	Active physical link, basic or adapted physical channel.	BR/EDR	Unreliable, uni-directional broadcast to any devices synchronized with the physical channel. Used for broadcast L2CAP groups.
Parked slave broadcast (PSB)	Control (LMP) PSB-C, User (L2CAP) PSB-U	Parked physical link, basic or adapted physical channel.	BR/EDR	Unreliable, uni-directional broadcast to all piconet devices. Used for LMP and L2CAP traffic to parked devices, and for access requests from parked devices.

Table 3.1: Logical transport types.

The classification of each link type follows from a selection procedure within three categories.

3.5.1 Casting

The first category is that of casting. This may be either unicast or broadcast.

- *Unicast links.* Unicast links exist between exactly two endpoints. Traffic may be sent in either direction on unicast links.
- *Broadcast links.* Broadcast links exist between one source device and zero or more receiver devices. Traffic is unidirectional, i e only sent from the source devices to the receiver devices. Broadcast links are connectionless, meaning that there is no procedure to create these links, and data may be sent over them at any time. Broadcast links are unreliable, and there is no guarantee that the data will be received.

3.5.2 Scheduling and acknowledgement scheme

The second category relates to the scheduling and acknowledgement scheme of the link, and implies the type of traffic that is supported by the link. These are synchronous, isochronous or asynchronous. There are no specific isochronous links defined, though the default ACL link can be configured to operate in this fashion.

- *Synchronous links.* Synchronous links provide a method of associating the Bluetooth piconet clock with the transported data. This is achieved by reserving regular slots on the physical channel, and transmitting fixed size packets at these regular intervals. Such links are suitable for constant rate isochronous data.
- *Asynchronous links.* Asynchronous links provide a method for transporting data that has no time-based characteristics. The data is normally expected to be retransmitted until successfully received, and each data entity can be processed at any time after receipt, without reference to the time of receipt of any previous or successive entity in the stream (providing the ordering of data entities is preserved.)
- *Isochronous links.* Isochronous links provide a method for transporting data that has time-based characteristics. The data may be retransmitted until received or expired. The data rate on the link need not be constant (this being the main difference from synchronous links.)

3.5.3 Class of Data

The final category is related to the class of data that is carried by the link. This is either control (LMP or PAL) data or user data. The user data category is sub-divided into L2CAP (or framed) data and stream (or unframed) data.

- *Control links.* Control links are only used for transporting LMP messages between two link managers. These links are invisible above the baseband

layer, and cannot be directly instantiated, configured or released by applications, other than by the use of the connection and disconnection services that have this effect implicitly. Control links are always multiplexed with an equivalent L2CAP link onto an ACL logical transport. Subject to the rules defining the ARQ scheme, the control link traffic always takes priority over the L2CAP link traffic.

- *L2CAP links.* L2CAP links are used to transport L2CAP PDUs, which may carry the L2CAP signaling channel (on the default ACL-U logical link only) or framed user data submitted to user-instantiated L2CAP channels. L2CAP frames submitted to the baseband may be larger than the available baseband packets. A link control protocol embedded within the LLID field preserves the frame-start and frame-continuation semantics when the frame is transmitted in a number of fragments to the receiver.
- *Stream links.* Stream links are used to transport user data that has no inherent framing that should be preserved when delivering the data. Lost data may be replaced by padding at the receiver.

3.5.4 Logical Transports

3.5.4.1 BR/EDR Asynchronous connection-oriented (ACL)

The asynchronous connection-oriented (ACL) logical transport is used to carry LMP and L2CAP control signaling and best effort asynchronous user data. The ACL logical transport uses a simple 1-bit ARQN/SEQN scheme to provide simple channel reliability. Every active slave device within a piconet has one ACL logical transport to the piconet master, known as the default ACL.

The default ACL is created between the master and the slave when a device joins a piconet (connects to the basic piconet physical channel). This default ACL is assigned a logical transport address (LT_ADDR) by the piconet master. This LT_ADDR is also used to identify the active physical link when required (or as a piconet active member identifier, effectively for the same purpose.)

The LT_ADDR for the default ACL is reused for synchronous connection-oriented logical transports between the same master and slave. (This is for reasons of compatibility with earlier Bluetooth specifications.) Thus the LT_ADDR is not sufficient on its own to identify the default ACL. However the packet types used on the ACL are different from those used on the synchronous connection-oriented logical transport. Therefore, the ACL logical transport can be identified by the LT_ADDR field in the packet header in combination with the packet type field.

The default ACL may be used for isochronous data transport by configuring it to automatically flush packets after the packets have expired. Asynchronous traffic can be sent over an ACL logical transport configured for isochronous traffic by marking the asynchronous packets as non-automatically-flushable.

This allows both isochronous and asynchronous traffic to be transferred at the same time to a single device.

If the default ACL is removed from the active physical link then all other logical transports that exist between the master and the slave are also removed. In the case of unexpected loss of synchronization to the piconet physical channel the physical link and all logical transports and logical links cease to exist at the time that this synchronization loss is detected.

A device may remove its default ACL (and by implication its active physical link) but remain synchronized to the piconet. This procedure is known as parking, and a device that is synchronized to the piconet, but has no active physical link is parked within that piconet.

When the device transitions to the parked state the default ACL logical links that are transported on the default ACL logical transport remain in existence, but become suspended. No data may be transferred across a suspended logical link. When the device transitions from the parked state back into connection state, a new default ACL logical transport is created (it may have a different LT_ADDR from the previous one) and the suspended logical links are attached to this default ACL and become active once again.

3.5.4.2 BR/EDR Synchronous Connection-Oriented (SCO)

The synchronous connection-oriented (SCO) logical transport is a symmetric, point-to-point transport between the master and a specific slave. The SCO logical transport reserves slots on the physical channel and can therefore be considered as a circuit-switched connection between the master and the slave. SCO logical transports carry 64 kb/s of information synchronized with the piconet clock. Typically this information is an encoded voice stream. Three different SCO configurations exist, offering a balance between robustness, delay and bandwidth consumption.

Each SCO-S logical link is supported by a single SCO logical transport, which is assigned the same LT_ADDR as the default ACL logical transport between the devices. Therefore the LT_ADDR field is not sufficient to identify the destination of a received packet. Because the SCO links use reserved slots, a device uses a combination of the LT_ADDR, the slot numbers (a property of the physical channel) and the packet type to identify transmissions on the SCO link.

Although slots are reserved for the SCO, it is permissible to use a reserved slot for traffic from another channel that has a higher priority. This may be required as a result of QoS commitments, or to send LMP signaling on the default ACL when the physical channel bandwidth is fully occupied by SCOs. As SCOs carry different packet types to ACLs, the packet type is used to identify SCO traffic (in addition to the slot number and LT_ADDR.)

There are no further architectural layers defined by the Bluetooth core specification that are transported over an SCO link. A number of standard formats are defined for the 64 kb/s stream that is transported, or an unformatted stream is allowed where the application is responsible for interpreting the encoding of the stream.

3.5.4.3 BR/EDR Extended Synchronous Connection-Oriented (eSCO)

The extended synchronous connection-oriented (eSCO) logical transport is a symmetric or asymmetric, point-to-point transport between the master and a specific slave. The eSCO reserves slots on the physical channel and can therefore be considered as a circuit-switched connection between the master and the slave. eSCO links offer a number of extensions over the standard SCO links, in that they support a more flexible combination of packet types and selectable data contents in the packets and selectable slot periods, allowing a range of synchronous bit rates to be supported.

eSCO links also can offer limited retransmission of packets (unlike SCO links where there is no retransmission.) If these retransmissions are required they take place in the slots that follow the reserved slots, otherwise the slots may be used for other traffic.

Each eSCO-S logical link is supported by a single eSCO logical transport, identified by a LT_ADDR that is unique within the piconet for the duration of the eSCO. eSCO-S links are created using LM signaling and follow scheduling rules similar to SCO-S links.

There are no further architectural layers defined by the Bluetooth core specification that are transported over an eSCO-S link. Instead applications may use the data stream for whatever purpose they require, subject to the transport characteristics of the stream being suitable for the data being transported.

3.5.4.4 BR/EDR Active Slave Broadcast (ASB)

The active slave broadcast logical transport is used to transport L2CAP user traffic to all devices in the piconet that are currently connected to the physical channel that is used by the ASB. There is no acknowledgement protocol and the traffic is uni-directional from the piconet master to the slaves. The ASB channel may be used for L2CAP group traffic (a legacy of the 1.1 specification), and is never used for L2CAP connection-oriented channels, L2CAP control signaling or LMP control signaling.

The ASB logical transport is inherently unreliable because of the lack of acknowledgement. To improve the reliability, each packet is transmitted a number of times. An identical sequence number is used to assist with filtering retransmissions at the slave device.

The ASB logical transport is identified by a reserved LT_ADDR. (The reserved LT_ADDR address is also used by the PSB logical transport.) An active slave will receive traffic on both logical transports, and cannot readily distinguish between them. As the ASB logical transport does not carry LMP traffic an active slave can ignore packets received over the LMP logical link on the ASB logical transport. However L2CAP traffic transmitted over the PSB logical transport is also received by active slaves on the ASB logical transport and cannot be distinguished from L2CAP traffic sent on the ASB transport.

An ASB is implicitly created whenever a piconet exists, and there is always one ASB associated with each of the basic and adapted piconet physical channels that exist within the piconet. Because the basic and adapted piconet physical channels are mostly coincident, a slave device cannot distinguish which of the ASB channels is being used to transmit the packets. This adds to the general unreliability of the ASB channel. (Although it is, perhaps, no more unreliable than general missed packets.)

A master device may decide to use only one of its two possible ASBs (when it has both a basic and adapted piconet physical channel), as with sufficient retransmissions it is possible to address both groups of slaves on the same ASB channel.

The ASB channel is never used to carry LMP or L2CAP control signals.

3.5.4.5 BR/EDR Parked Slave Broadcast (PSB)

The parked slave broadcast logical transport is used for communications between the master and slaves that are parked (have given up their default ACL logical transport.) The parked slave broadcast link is the only logical transport that exists between the piconet master and parked slaves.

The PSB logical transport is more complex than the other logical transports as it consists of a number of phases, each having a different purpose. These phases are the control information phase (used to carry the LMP logical link), the user information phase (used to carry the L2CAP logical link), and the access phase (carrying baseband signaling.) The control information and broadcast information phases are usually mutually exclusive as only one of them can be supported in a single beacon interval. (Even if there is no control or user information phase, the master is still required to transmit a packet in the beacon slots so that the parked slaves can resynchronize.) The access phase is normally present unless cancelled in a control information message.

The control information phase is used for the master to send information to the parked slaves containing modifications to the PSB transport attributes, modifications to the beacon train attributes, or a request for a parked slave to become active in the piconet (known as unparking). This control information is carried in LMP messages on the LMP logical link. (The control information phase is also present in the case of a user information phase where the user information requires more than one baseband packet.)

Packets in the control information phase are always transmitted in the physical channel beacon train slots, and cannot be transmitted on any other slots. The control information occupies a single DM1 packet and is repeated in every beacon train slot within a single beacon interval. (If there is no control information then there may be a user information phase that uses the beacon slots. If neither phase is used then the beacon slots are used for other logical transport traffic or for NULL packets.)

The user information phase is used for the master to send L2CAP packets that are destined for all piconet slaves. User information may occupy one or more baseband packets. If the user information occupies a single packet then the user information packet is repeated in each of the piconet channel beacon train slots.

If the user information occupies more than one baseband packet then it is transmitted in slots after the beacon train (the broadcast scan window) and the beacon slots are used to transmit a control information phase message that contains the timing attributes of this broadcast scan window. This is required so that the parked slaves remain connected to the piconet physical channel to receive the user information.

The access phase is normally present unless temporarily cancelled by a control message carried in the control information broadcast phase. The access window consists of a sequence of slots that follow the beacon train. In order for a parked slave to become active in the piconet, it may send such an access request to the piconet master during the access window. Each parked slave is allocated an access request address (not necessarily unique) that controls when during the access window the slave requests access.

The PSB logical transport is identified by the reserved LT_ADDR of 0. This reserved LT_ADDR address is also used by the ASB logical transport. Parked slaves are not normally confused by the duplicated use of the LT_ADDR as they are only connected to the piconet physical channel during the time that the PSB transport is being used.

3.5.5 Logical Links

Some logical transports are capable of supporting different logical links, either concurrently multiplexed, or one of the choice.

3.5.5.1 BR/EDR Logical Links

Within BR/EDR logical transports, the logical link is identified by the logical link identifier (LLID) bits in the payload header of baseband packets that carry a data payload. The logical links distinguish between a limited set of core protocols that are able to transmit and receive data on the logical transports. Not all of the logical transports are able to carry all of the logical links (the supported mapping is shown in Figure 3.2 on page 32.) In particular the BR/EDR SCO and eSCO logical transports are only able to carry constant data rate streams,

and these are uniquely identified by the LT_ADDR. Such logical transports only use packets that do not contain a payload header, as their length is known in advance, and no LLID is necessary.

3.5.5.1.1 ACL Control Logical Link (ACL-C)

The ACL Control Logical Link (ACL-C) is used to carry BR/EDR LMP signaling between devices in the piconet. The control link is only carried on the default ACL logical transport and on the PSB logical transport (in the control information phase). The ACL-C link is always given priority over the ACL-U (see below) link when carried on the same logical transport.

3.5.5.1.2 User Asynchronous/Isochronous Logical Link (ACL-U)

The user asynchronous/isochronous logical link (ACL-U) is used to carry all asynchronous and isochronous framed user data. The ACL-U link is carried on all but the synchronous logical transports. Packets on the ACL-U link are identified by one of two reserved LLID values. One value is used to indicate whether the baseband packet contains the start of an L2CAP frame and the other indicates a continuation of a previous frame. This ensures correct synchronization of the L2CAP reassembler following flushed packets. The use of this technique removes the need for a more complex L2CAP header in every baseband packet (the header is only required in the L2CAP start packets), but adds the requirement that a complete L2CAP frame shall be transmitted before a new one is transmitted. (An exception to this rule being the ability to flush a partially transmitted L2CAP frame in favor of another L2CAP frame.)

3.5.5.1.3 User Synchronous/Extended Synchronous Logical Links (SCO-S/ eSCO-S)

Synchronous (SCO-S) and extended synchronous (eSCO-S) logical links are used to support isochronous data delivered in a stream without framing. These links are associated with a single logical transport, where data is delivered in constant sized units at a constant rate. There is no LLID within the packets on these transports, as only a single logical link can be supported, and the packet length and scheduling period are pre-defined and remain fixed during the lifetime of the link.

Variable rate isochronous data cannot be carried by the SCO-S or eSCO-S logical links. In this case the data must be carried on ACL-U logical links, which use packets with a payload header.

3.5.5.2 AMP Logical Links

3.5.5.2.1 AMP Control Logical Link (AMP-C)

Each PAL functions differently with respect to a control logical link. When one exists, this logical link is referred to as the AMP-C logical link.

3.5.5.2.2 AMP User Asynchronous/Isochronous Logical Link (AMP-U)

The AMP user asynchronous/isochronous logical link (AMP-U) is used to carry all asynchronous and isochronous framed user data over an AMP. Unlike the ACL-U logical link, the AMP-U supports multiple logical link handles per physical link and each logical link handle may have different quality of service capabilities. The details of how the AMP-U logical link is mapped to the underlying MAC/PHY is described by the PAL.

3.6 L2CAP CHANNELS

L2CAP provides a multiplexing role allowing many different applications to share the resources of an ACL-U or AMP-U logical link between two devices. Applications and service protocols interface with L2CAP using a channel-oriented interface to create connections to equivalent entities on other devices.

L2CAP channel endpoints are identified to their clients by a Channel Identifier (CID). This is assigned by L2CAP, and each L2CAP channel endpoint on any device has a different CID.

L2CAP channels may be configured to provide an appropriate Quality of Service (QoS) to the application. L2CAP maps the channel onto the ACL-U logical link or one of the AMP-U logical links.

L2CAP supports channels that are connection-oriented and others that are group-oriented. Group-oriented channels may be mapped onto the ASB-U logical link, or implemented as iterated transmission to each member in turn over an ACL-U logical link.

Apart from the creation, configuration and dismantling of channels, the main role of L2CAP is to multiplex service data units (SDUs) from the channel clients onto the ACL-U or AMP-U logical links, and to carry out a simple level of scheduling, selecting SDUs according to relative priority.

L2CAP can provide a per channel flow control with the peer L2CAP layer. This option is selected by the application when the channel is established. L2CAP can also provide enhanced error detection and retransmission to (a) reduce the probability of undetected errors being passed to the application and (b) recover from loss of portions of the user data when the Baseband layer performs a flush on the ACL-U logical link.

In the case where an HCI is present, the L2CAP is also required to segment L2CAP SDUs into fragments that will fit into the baseband buffers, and also to operate a token based flow control procedure over the HCI, submitting fragments to the baseband only when allowed to do so. This may affect the scheduling algorithm.

4 COMMUNICATION TOPOLOGY

4.1 PICONET TOPOLOGY

Any time a link is created using the BR/EDR Controller it is within the context of a piconet. A piconet consists of two or more devices that occupy the same BR/EDR physical channel.

Connected BR/EDR devices communicate on the same physical channel by synchronizing on a common clock and hopping sequence.The common (piconet) clock is identical to the Bluetooth clock of one of the devices in the piconet, known as the master of the piconet, and the hopping sequence is derived from the master's clock and the master's Bluetooth device address. All other synchronized devices are referred to as slaves in the piconet.

The terms master and slave are only used when describing these roles in a piconet.

Within a common location a number of independent piconets may exist. Each piconet has a different physical channel (that is a different master device and an independent timing and hopping sequence.)

A Bluetooth device may participate concurrently in two or more piconets. It does this on a time-division multiplexing basis. A Bluetooth device can never be a master of more than one piconet. (Since in BR/EDR the piconet is defined by synchronization to the master's Bluetooth clock it is impossible to be the master of two or more piconets.) A Bluetooth device may be a slave in many independent piconets.

A Bluetooth device that is a member of two or more piconets is said to be involved in a scatternet. Involvement in a scatternet does not necessarily imply any network routing capability or function in the Bluetooth device. The Bluetooth core protocols do not, and are not intended to offer such functionality, which is the responsibility of higher level protocols and is outside the scope of the Bluetooth core specification.

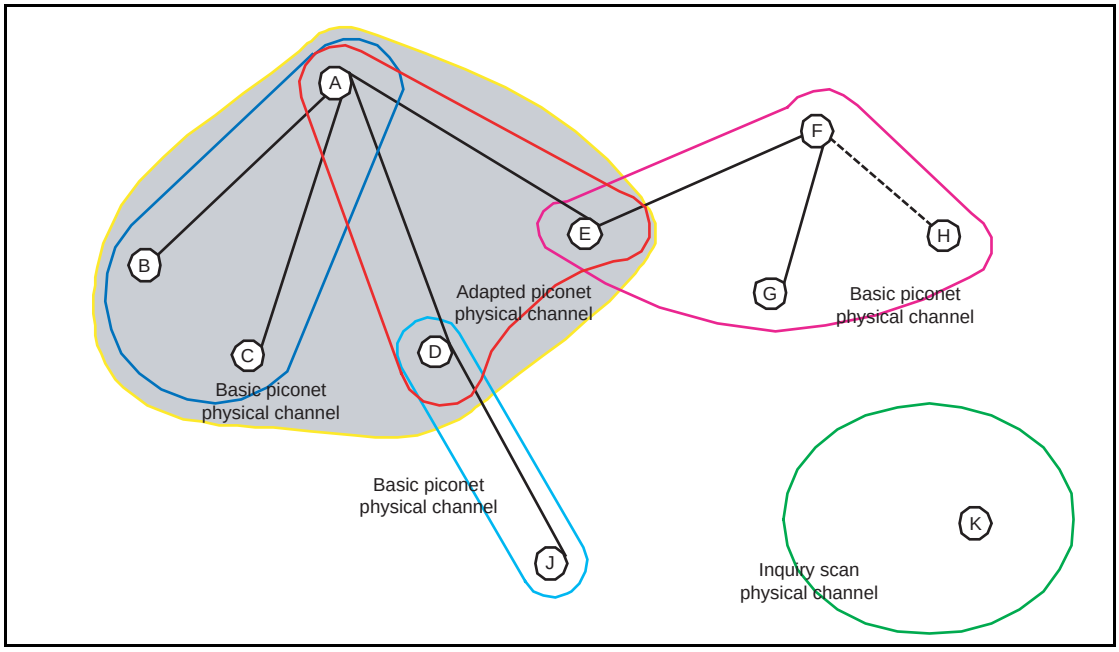

Figure 4.1: Example Bluetooth topology

In Figure 4.1 on page 60 an example topology is shown that demonstrates a number of the architectural features described below. Device A is a master in a piconet (represented by the shaded area, and known as piconet A) with devices B, C, D and E as slaves. Two other piconets are shown: a) one piconet with device F as master (known as piconet F) and devices E, G and H as slaves and b) one piconet with device D as master (known as piconet D) and device J as slave.

In piconet A there are two physical channels. Devices B and C are using the basic piconet physical channel (represented by the blue enclosure) as they do not support adaptive frequency hopping. Devices D and E are capable of supporting adaptive frequency hopping, and are using the adapted piconet physical channel (represented by the red enclosure.) Device A is capable of adaptive frequency hopping, and operates in a TDM basis on both physical channels according to which slave is being addressed.

Piconet D and piconet F are both using only a basic piconet physical channel (represented by the cyan and magenta enclosures respectively.) In the case of piconet D this is because device J does not support the adaptive hopping mode. Although device D supports adaptive hopping it cannot use it in this piconet. In piconet F device F does not support adaptive hopping, and therefore it cannot be used in this piconet.

Device K is shown in the same locality as the other devices. It is not currently a member of a piconet, but has services that it offers to other Bluetooth devices. It is currently listening on its inquiry scan physical channel (represented by the green enclosure), awaiting an inquiry request from another device.

4.2 OPERATIONAL PROCEDURES AND MODES

The typical operational mode of a Bluetooth device is to be connected to other Bluetooth devices (in a piconet) and exchanging data with that Bluetooth device. As Bluetooth is an ad-hoc wireless communications technology there are also a number of operational procedures that enable piconets to be formed so that the subsequent communications can take place. Procedures and modes are applied at different layers in the architecture and therefore a device may be engaged in a number of these procedures and modes concurrently.

4.2.1 BR/EDR Procedures

4.2.1.1 Inquiry (Discovering) Procedure

Bluetooth devices use the inquiry procedure to discover nearby devices, or to be discovered by devices in their locality.

The inquiry procedure is asymmetrical. A Bluetooth device that tries to find other nearby devices is known as an inquiring device and actively sends inquiry requests. Bluetooth devices that are available to be found are known as discoverable devices and listen for these inquiry requests and send responses. The inquiry procedure uses a special physical channel for the inquiry requests and responses.

Both inquiring and discoverable devices may already be connected to other Bluetooth devices in a piconet. Any time spent inquiring or occupying the inquiry scan physical channel needs to be balanced with the demands of the QoS commitments on existing logical transports.

The inquiry procedure does not make use of any of the architectural layers above the physical channel, although a transient physical link may be considered to be present during the exchange of inquiry and inquiry response information.

4.2.1.1.1 Extended Inquiry Response

An Extended Inquiry Response can be used to provide miscellaneous information during the inquiry response procedure. Data types are defined for such things as local name and supported services, information that otherwise would have to be obtained during a connection. A device that receives a local name and a list of supported services in an extended inquiry response does not have to connect to do a remote name request and an SDP service search, thereby shortening the time to useful information. It is recommended that a device includes all supported services and a significant minority part of its local name in the extended inquiry response.

The extended inquiry response procedure is backwards compatible with the standard inquiry response procedure.

4.2.1.2 Paging (Connecting) Procedure

The procedure for forming connections is asymmetrical and requires that one Bluetooth device carries out the page (connection) procedure while the other Bluetooth device is connectable (page scanning.) The procedure is targeted, so that the page procedure is only responded to by one specified Bluetooth device.

The connectable device uses a special physical channel to listen for connection request packets from the paging (connecting) device. This physical channel has attributes that are specific to the connectable device, hence only a paging device with knowledge of the connectable device is able to communicate on this channel.

Both paging and connectable devices may already be connected to other Bluetooth devices in a piconet. Any time spent paging or occupying the page scan physical channel needs to be balanced with the demands of the QoS commitments on existing logical transports.

4.2.1.3 Connected mode

After a successful connection procedure over the BR/EDR Controller, the devices are physically connected to each other within a piconet. This means that there is a piconet physical channel to which they are both connected, there is a physical link between the devices, and there are default ACL-C and ACL-U logical links. When in the connected mode it is possible to create and release additional logical links, and to change the modes of the physical and logical links while remaining connected to the piconet physical channel. It is also possible for the device to carry out inquiry, paging or scanning procedures or to be connected to other piconets without needing to disconnect from the original piconet physical channel.

Additional logical links are created using the Link Manager that exchanges Link Manager Protocol messages with the remote Bluetooth device to negotiate the creation and settings for these links. Default ACL-C and ACL-U logical links are always created during the connection process, and these are used for LMP messages and the L2CAP signaling channel respectively.

It is noted that two default logical links are created when two units are initially connected. One of these links (ACL-C) transports the LMP control protocol and is invisible to the layers above the Link Manager. The other link (ACL-U) transports the L2CAP signaling protocol and any multiplexed L2CAP best-effort channels. It is common to refer to a default ACL logical transport, which can be resolved by context, but typically refers to the default ACL-U logical link. Also note that these two logical links share a logical transport.

AMP physical links may be established in connected mode. Once an AMP physical link is created, one or more AMP-U logical links may be established to transport L2CAP user data.

During the time that a slave device is actively connected to a piconet there is always a default ACL logical transport between the slave and the master device. There are two methods of deleting the default ACL logical transport. The first method is to detach the device from the piconet physical channel, at which time the entire hierarchy of L2CAP channels, logical links, and logical transports between the devices is deleted.

The second method is to place the physical link to the slave device in the park state, at which time it gives up its default ACL logical transport. This is only allowed if all other logical transports have been deleted (except for the ASB logical transport that cannot be explicitly created or deleted.) It is not allowed to park a device while it has any logical transports other than the default ACL and ASB logical transports.

When the slave device physical link is parked, its default ACL logical transport is released and the ASB logical transport is replaced with a PSB logical transport. The ACL-C and ACL-U logical links that are multiplexed onto the default ACL logical transport remain in existence but cannot be used for the transport of data. The Link Manager on the master device restricts itself to the use of LMP messages that are allowed to be transported over the PSB-C logical link. The Channel Manager and L2CAP Resource Manager ensure that no L2CAP unicast data traffic is submitted to the controller while the device is parked. The Channel Manager may decide to manage the parking and unparking of the device as necessary to allow data to be transported.

4.2.1.4 Hold mode

Hold mode is not a general device mode, but applies to unreserved slots on the physical link. When in this mode, the physical link is only active during slots that are reserved for the operation of the synchronous link types SCO and eSCO. All asynchronous links are inactive. Hold modes operate once for each invocation and are then exited when complete, returning to the previous mode.

4.2.1.5 Sniff mode

Sniff mode is not a general device mode, but applies to the default ACL logical transports. When in this mode the availability of these logical transports is modified by defining a duty cycle consisting of periods of presence and absence. Devices that have their default ACL logical transports in sniff mode may use the absent periods to engage in activity on another physical channel, or to enter reduced power mode. Sniff mode only affects the default ACL logical transports (i.e. their shared ACL logical transport), and does not apply to any additional SCO or eSCO logical transports that may be active. The periods of presence and absence of the physical link on the piconet physical channel is derived as a union of all logical transports that are built on the physical link.

Sniff subrating provides a mechanism for further reducing the active duty cycle, thereby enhancing the power-saving capability of sniff mode. Sniff subrating

allows a Host to create a guaranteed access-like connection by specifying maximum transmit and receive latencies. This allows the basebands to optimize the low power performance without having to exit and re-enter sniff mode using Link Manager commands.

Note that broadcast logical transports have no defined expectations for presence or absence. A master device should aim to schedule broadcasts to coincide with periods of physical link presence within the piconet physical channel, but this may not always be possible or practical. Repetition of broadcasts is defined to improve the possibilities for reaching multiple slaves without overlapping presence periods. However, broadcast logical transports cannot be considered to be reliable.

4.2.1.6 Parked state

A slave device may remain connected to a piconet but have its physical link in the parked state. In this state the device cannot support any logical links to the master with the exception of the PSB-C and PSB-U logical links that are used for all communication between the piconet master and the parked slave.

When the physical link to a slave device is parked this means that there are restrictions on when the master and slave may communicate, defined by the PSB logical transport parameters. During times when the PSB logical transport is inactive (or absent) then the devices may engage in activity on other physical channels, or enter reduced power mode.

4.2.1.7 Role switch procedure

The role switch procedure is a method for swapping the roles of two devices connected in a piconet. The procedure involves moving from the physical channel that is defined by the original master device to the physical channel that is defined by the new master device. In the process of swapping from one physical channel to the next, the hierarchy of physical links and logical transports over the BR/EDR Controller are removed and rebuilt, with the exception of the ASB and PSB logical transports that are implied by the topology and are not preserved. Note that the role switch procedure does not affect AMP physical channels. After the role switch, the original piconet physical channel may cease to exist or may be continued if the original master had other slaves that are still connected to the channel.

The procedure only copies the default ACL logical links and supporting layers to the new physical channel. Any additional logical transports are not copied by this procedure, and if required this must be carried out by higher layers. The LT_ADDRs of any affected transports may not be preserved as the values may already be in use on the new physical channel.

If there are any QoS commitments or modes such as sniff mode on the original logical transports, then these are not preserved after a role switch. These must be renegotiated after the role switch has completed.

4.2.1.8 Enhanced Data Rate

Enhanced Data Rate is a method of extending the capacity and types of Bluetooth packets for the purposes of increasing the maximum throughput, providing better support for multiple connections, and lowering power consumption, while the remainder of the architecture is unchanged.

Enhanced Data Rate may be selected as a mode that operates independently on each logical transport. Once enabled, the packet type bits in the packet header are interpreted differently from their meaning in Basic Rate mode. This different interpretation is clarified in conjunction with the logical transport address field in the header. The result of this interpretation allows the packet payload header and payload to be received and demodulated according to the packet type. Enhanced Data Rate can be enabled only for ACL-U, eSCO-S logical transports and cannot be enabled for ACL-C, SCO-S, and the broadcast logical transports.

4.2.2 AMP Procedures

4.2.2.1 AMP Discovery Procedures

The AMP Manager is responsible for discovering local AMP Controller(s) and maintaining that list over time as AMPs may be added or removed dynamically from the system. The local AMP Manager may request a list of AMPs from the remote AMP Manager. After the list of AMPs has been requested by the remote device, when an AMP is added or removed from the system, the local AMP Manager will notify that remote AMP Manager of the change.

Each AMP Is identified with an ID and a type. Once the list of AMPs has been received, the AMP Manager may request information (AMP_Info) for each AMP.

4.2.2.2 Physical Link Creation Procedure

To set up an L2CAP channel with a remote device over an AMP physical link (AMP channel), the AMP Manager first discovers the remote AMP(s), collects the necessary information about the remote AMP(s) to set up a physical link in an optimal way and then initiates the physical link creation. This is done over a dedicated L2CAP channel.

The AMP Manager provides the remote AMP information that it collected about the remote AMP to the local AMP PAL. The local AMP PAL then uses this information to create the AMP physical link.

4.2.2.3 Logical Link Creation Procedure

Once a physical link exists, L2CAP creates an AMP logical link with the desired QoS. An L2CAP channel is then created over the logical link, at which point the channel is ready for data communication.

5 SECURE SIMPLE PAIRING OVERVIEW

The primary goal of Secure Simple Pairing is to simplify the pairing procedure for the user. Secondary goals are to maintain or improve the security in Bluetooth wireless technology. Since high levels of security and ease-of-use are often at opposite ends of the spectrum in many technologies and products, much care has been taken to maximize security while minimizing complexity from the end user's point of view.

5.1 SECURITY GOALS

Secure Simple Pairing has two security goals: protection against passive eavesdropping and protection against man-in-the-middle (MITM) attacks (active eavesdropping). It is a goal of Secure Simple Pairing to exceed the maximum security level provided by the use of a 16 alphanumeric PIN with the pairing algorithm used in Bluetooth Core Specification version 2.0 + EDR and earlier versions. Note that many Bluetooth devices compliant with Bluetooth Core Specification 2.0 + EDR and earlier versions use a 4-digit PIN or a fixed PIN of commonly known values significantly limiting the security on the link.

5.2 PASSIVE EAVESDROPPING PROTECTION

A strong link key coupled with a strong encryption algorithm is necessary to give the user protection against passive eavesdropping. The strength of the link key is based on the amount of entropy (or randomness) in its generation process which would not be known by an attacker. Using legacy pairing, the only source of entropy is the PIN which, in many use cases, is typically four digits either selected by the user or fixed for a given product. Therefore, if the pairing procedure and one authentication exchange is recorded one can run an exhaustive search to find the PIN in a very short amount of time on commonly available computing hardware. With Secure Simple Pairing, the recording attack becomes much harder as the attacker must have solved a hard problem in public key cryptography in order to derive the link key from the recorded information. This protection is independent of the length of the passkey or other numeric values that the user must handle. Secure Simple Pairing gives the same resistance against the recording and passive eavesdropping attacks even when the user is not required to do anything.

Secure Simple Pairing uses Elliptic Curve Diffie Hellman (ECDH) public key cryptography as a means to thwart passive eavesdropping attacks. ECDH provides a very high degree of strength against passive eavesdropping attacks but it may be subject to MITM attacks, which however, are much harder to perform in practice than the passive eavesdropping attack (see Section 5.3, “Man-In-The-Middle Protection,” on page 68).

Using the security protocols in the Bluetooth Core Specification version 2.0 + EDR and earlier with a 16 numeric digit PIN achieves about 53 bits of entropy

whereas a 16 character alphanumeric, case sensitive PIN yields about 95 bits of entropy when the entire 62 character set is used ([0, … 9, 'A', … 'Z', 'a', … 'z']). Secure Simple Pairing has approximately 95 bits of entropy using the FIPS approved P192 elliptic curve which is at least as good as the entropy in Bluetooth Core Specification 2.0 + EDR and earlier using a 16 character, alphanumeric, case sensitive PIN. Secure Simple Pairing, therefore, exceeds the security requirements of the Bluetooth SIM Access Profile (SAP) which is the profile with the most stringent security requirements. ECDH cryptography was selected over standard Diffie Hellman (often referred to as DH76) since it is computationally less complex and less likely to exceed the low computational capacity in common Bluetooth Controllers.

5.3 MAN-IN-THE-MIDDLE PROTECTION

A man-in-the-middle (MITM) attack occurs when a user wants to connect two devices but instead of connecting directly with each other they unknowingly connect to a third (attacking) device that plays the role of the device they are attempting to pair with. The third device then relays information between the two devices giving the illusion that they are directly connected. The attacking device may even eavesdrop on communication between the two devices (known as active eavesdropping) and is able to insert and modify information on the connection. In this type of attack, all of the information exchanged between the two devices are compromised and the attacker may inject commands and information into each of the devices thus potentially damaging the function of the devices. Devices falling victim to the attack are capable of communicating only when the attacker is present. If the attacker is not active or out range, the two victim devices will not be able to communicate directly with each other and the user will notice it.

To prevent MITM attacks, Secure Simple Pairing offers two user assisted numeric methods: numerical comparison or passkey entry. If Secure Simple Pairing would use 16 decimal digit numbers, then the usability would be the same as using legacy pairing with 16 decimal digit PIN. The chance for a MITM to succeed inserting its own link keys in this case is a 1 in $10^{16} = 2^{53}$ pairing instances, which is an unnecessarily low probability.

Secure Simple Pairing protects the user from MITM attacks with a goal of offering a 1 in 1,000,000 chance that a MITM could mount a successful attack. The strength of the MITM protections was selected to minimize the user impact by using a six digit number for numerical comparison and Passkey entry. This level of MITM protection was selected since, in most cases, users can be alerted to the potential presence of a MITM attacker when the connection process fails as a result of a failed MITM attack. While most users feel that provided that they have not compromised their passkey, a 4-digit key is sufficient for authentication (i.e. bank card PIN codes), the use of six digits allows Secure Simple Pairing to be FIPS compliant and this was deemed to have little perceivable usability impact.

5.4 ASSOCIATION MODELS

Secure Simple Pairing uses four association models referred to as Numeric Comparison, Just Works, Out Of Band, and Passkey Entry. Each of these association models are described in more detail in the following sections.

The association model used is deterministic based on the I/O capabilities of the two devices.

5.4.1 Numeric Comparison

The Numeric Comparison association model is designed for scenarios where both devices are capable of displaying a six digit number and both are capable of having the user enter "yes" or "no". A good example of this model is the cell phone / PC scenario.

The user is shown a six digit number (from "000000" to "999999") on both displays and then asked whether the numbers are the same on both devices. If "yes" is entered on both devices, the pairing is successful.

The numeric comparison serves two purposes. First, since many devices do not have unique names, it provides confirmation to the user that the correct devices are connected with each other. Second, the numeric comparison provides protection against MITM attacks (see Section 5.3 on page 68).

Note that there is a significant difference from a cryptographic point of view between Numeric Comparison and the PIN entry model used by Bluetooth Core Specification and earlier versions. In the Numeric Comparison association model, the six digit number is an artifact of the security algorithm and not an input to it, as is the case in the Bluetooth security model. Knowing the displayed number is of no benefit in decrypting the encoded data exchanged between the two devices.

5.4.2 Just Works

The Just Works association model is primarily designed for scenarios where at least one of the devices does not have a display capable of displaying a six digit number nor does it have a keyboard capable of entering six decimal digits. A good example of this model is the cell phone/mono headset scenario where most headsets do not have a display.

The Just Works association model uses the Numeric Comparison protocol but the user is never shown a number and the application may simply ask the user to accept the connection (exact implementation is up to the end product manufacturer).

The Just Works association model provides the same protection as the Numeric Comparison association model against passive eavesdropping but offers no protection against the MITM attack.

When compared against today's experience of a headset with a fixed PIN, the security level of the Just Works association model is considerably higher since a high degree of protection against passive eavesdropping is realized.

5.4.3 Out of Band

The Out of Band (OOB) association model is primarily designed for scenarios where an Out of Band mechanism is used to both discover the devices as well as to exchange or transfer cryptographic numbers used in the pairing process. In order to be effective from a security point of view, the Out of Band channel should provide different properties in terms of security compared to the Bluetooth radio channel. The Out of Band channel should be resistant to MITM attacks. If it is not, security may be compromised during authentication.

The user's experience differs a bit depending on the Out of Band mechanism. As an example, with a Near Field Communication (NFC) solution, the user(s) will initially touch the two devices together, and is given the option to pair the first device with the other device. If "yes" is entered, the pairing is successful. This is a single touch experience where the exchanged information is used in both devices. The information exchanged includes discovery information (such as the Bluetooth Device Address) as well as cryptographic information. One of the devices will use a Bluetooth Device Address to establish a connection with the other device. The rest of the exchanged information is used during authentication.

The OOB mechanism may be implemented as either read only or read/write. If one side is read only, a one-way authentication is performed. If both sides are read/write, a two-way authentication is performed.

The OOB protocol is selected only when the pairing process has been activated by previous OOB exchange of information and one (or both) of the device(s) gives OOB as the IO capabilities. The protocol uses the information which has been exchanged and simply asks the user to confirm connection.

The OOB association model supports any OOB mechanism where cryptographic information and the Bluetooth Device Address can be exchanged. The OOB association model does not support a solution where the user has activated a Bluetooth connection and would like to use OOB for authentication only.

5.4.4 Passkey Entry

The Passkey Entry association model is primarily designed for the scenario where one device has input capability but does not have the capability to display six digits and the other device has output capabilities. A good example of this model is the PC and keyboard scenario.

The user is shown a six digit number (from "000000" to "999999") on the device with a display, and is then asked to enter the number on the other

device. If the value entered on the second device is correct, the pairing is successful. Note that there is a significant difference from a cryptographic point of view between Passkey Entry and the PIN entry model used by Bluetooth Core Specification 2.0 + EDR and earlier versions. In the Passkey Entry association model, the six digit number is independent of the security algorithm and not an input to it, as is the case in the 2.0 + EDR security model. Knowing the entered number is of no benefit in decrypting the encoded data exchanged between the two devices.

5.4.5 Association Model Overview

The following diagram shows Secure Simple Pairing from the point of view of the technology used for discovery and then the different association possibilities.

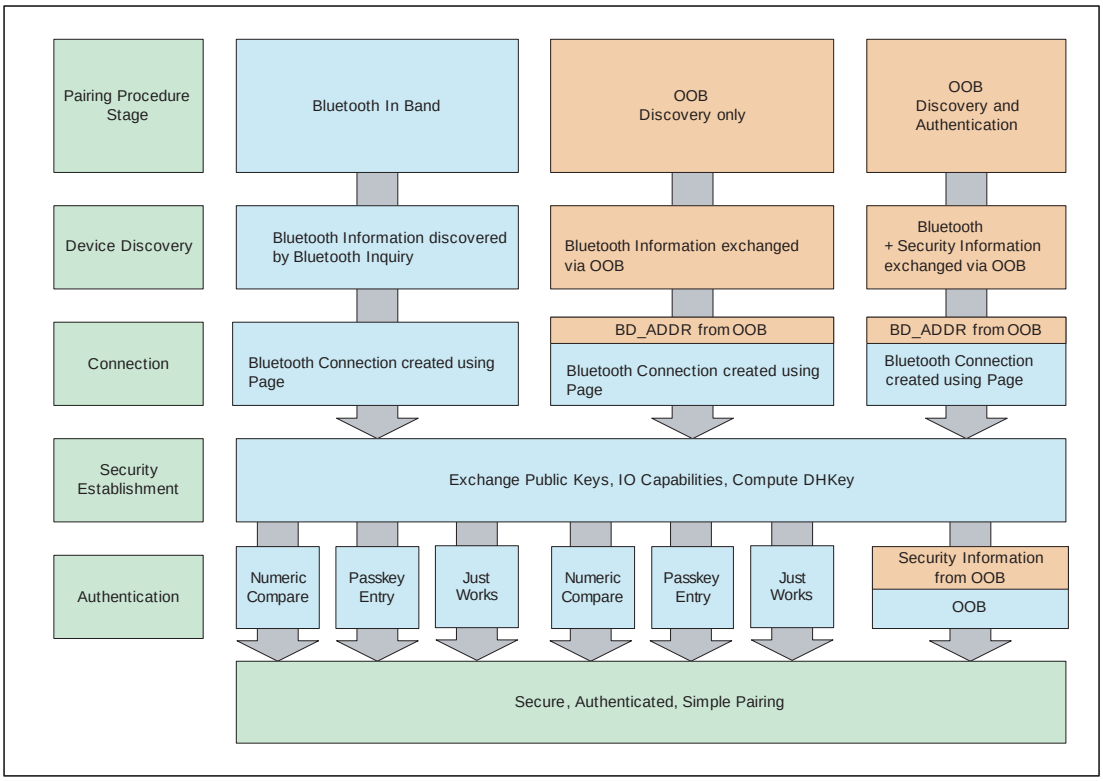

Figure 5.1: Secure Simple Pairing Association Models

5.5 AMP SECURITY

AMP security does not change the user experience because it utilizes the same Secure Simple Pairing association models that were introduced in the Bluetooth 2.1 + EDR Core Specification. From the user's point of view, all radios are "paired" in one process.

AMP security starts during the Secure Simple Pairing process. The link key for BR/EDR is generated during Phase 4 of Secure Simple Pairing. A 256-bit Generic AMP Link Key (GAMP_LK) is generated from the BR/EDR Link Key.

The Generic AMP Link Key is stored in the security database alongside the BR/EDR Link Key once pairing has completed.

AMP security does not affect the BR/EDR Link Key so backwards compatibility is maintained for devices that support the Generic AMP feature with devices that do not.

When an AMP is used for the first time, a dedicated AMP key is created by the AMP Manager for that AMP type using the new Secure Simple Pairing function h2 and a KeyID for the AMP type. The length of the Dedicated AMP Link Key depends on the AMP Type. If the Pair-wise Master key already exists due to a previous connection the AMP link key is not created and the stored key is reused.

The Dedicated AMP Link Key is sent to the PAL during the Physical Link creation process. Each PAL is responsible for using the Dedicated AMP Link Key during the security phase of the physical link establishment process. Note that a Dedicated AMP link key is used for multiple sessions over the same AMP.

Each time a dedicated AMP key is successfully created, the Generic AMP Link Key is updated. This is performed using the h2 function with KeyID "gamp."

ACRONYMS & ABBREVIATIONS

CONTENTS

1 List of Acronyms and Abbreviations 75

1 LIST OF ACRONYMS AND ABBREVIATIONS

Acronym or abbreviation	Writing out in full	Which means
8DPSK	8 phase Differential Phase Shift Keying	3 Mbps modulation type used by Enhanced Data rate
π/4 DQPSK	pi/4 Rotated Differential Quaternary Phase Shift Keying	2 Mbps modulation type used by Enhanced Data Rate
A		
A2MP	AMP Manager Protocol	
AAD	Additional Authentical Data	
AC	Access Category	
ACI	Access Category Index	
ACK	Acknowledge/ACKnowledgement	
ACL	Asynchronous Connection-oriented [logical transport]	Reliable or time-bounded, bi-directional, point-to-point.
ACL-C	ACL Control [logical link] (LMP)	
ACL-U	ACL User [logical link] (L2CAP)	
ACO	Authenticated Ciphering Offset	
AFH	Adaptive Frequency Hopping	
AHS	Adapted Hop Sequence	
AIFSN	Arbitration Interframe Space Number	
AMP	Alternate MAC PHY	
AMP_ASSOC	Alternate MAC PHY association information	
AR_ADDR	Access Request Address	
ARQ	Automatic Repeat Request	
ASB	Active Slave Broadcast [logical transport]	Unreliable, uni-directional broadcast to any devices synchronized with the physical channel.
ASB-U	ASB User [logical link] (L2CAP)	
B		
BB	Baseband	

Table 1.1: Acronyms and Abbreviations

Acronym or abbreviation	Writing out in full	Which means
BCH	Bose, Chaudhuri & Hocquenghem	Type of code The persons who discovered these codes in 1959 (H) and 1960 (B&C)
BD_ADDR	Bluetooth Device Address	
BER	Bit Error Rate	
BT	Bandwidth Time	
C		
CAC	Channel Access Code	
CL	Connectionless	
CCMP	CTR with CBC-MAC Protocol	
CKLN	Native Clock	
CLK	Master Clock	
CLKE	Estimated Clock	
CODEC	COder DECoder	
COF	Ciphering Offset	
CRC	Cyclic Redundancy Check	
CTS	Clear to send	
CVSD	Continuous Variable Slope Delta Modulation	
D		
DA	Destination address	
DAC	Device Access Code	
DCE	Data Communication Equipment	
DCE	Data Circuit-Terminating Equipment	In serial communications, DCE refers to a device between the communication endpoints whose sole task is to facilitate the communications process; typically a modem
DCI	Default Check Initialization	
DEVM	Differential Error Vector Magnitude	Measure of modulation error used for Enhanced Data Rate transmitter testing
DFS	Dynamic Frequency Selection	
DH	Data-High Rate	Data packet type for high rate data

Table 1.1: Acronyms and Abbreviations

Acronym or abbreviation	Writing out in full	Which means
DIAC	Dedicated Inquiry Access Code	
DM	Data - Medium Rate	Data packet type for medium rate data
DPSK	Differential Phase Shift Keying	Generic description of Enhanced Data Rate modulation
DQPSK	Differential Quaternary Phase Shift Keying	Modulation type used by Enhanced Data Rate
DSAP	Destination Service Access Point	
DTE	Data Terminal Equipment	In serial communications, DTE refers to a device at the endpoint of the communications path; typically a computer or terminal.
DUT	Device Under Test	
DV	Data Voice	Data packet type for data and voice
E		
ECWmax	Enhanced Contention Window maximum	
ECWmim	Enhanced Contention Window minimum	
ED	Erroneous Data	
EDCA	Enhanced Distributed Channel Access	
EDR	Enhanced Data Rate	
EFS	Extended Flow Specification	
EIR	Extended Inquiry Response	Host supplied information transmitted in the inquiry responses sub-state.
EIRP	Effective Isotropic Radiated Power	Equivalent power that an isotropic antenna must transmit to provide the same field power density
EPR	Encryption Pause Resume	Mode allowing the device to initiate the pause and resume encryption sequence
ERP	Extended Rate PHY conforming to Clause 19	
eSCO	Extended Synchronous Connection Oriented [logical transport]	Bi-directional, symmetric or asymmetric, point-to-point, general regular data, limited retransmission.

Table 1.1: Acronyms and Abbreviations

Acronym or abbreviation	Writing out in full	Which means
eSCO-S	Stream eSCO (unframed)	used to support isochronous data delivered in a stream without framing
ESS	Extended Service Set	
ETSI	European Telecommunications Standards Institute	
F		
FCC	Federal Communications Commission	
FEC	Forward Error Correction code	
FH	Frequency Hopping	
FHS	Frequency Hop Synchronization	
FIFO	First In First Out	
FM	Frequency Modulation	Modulation Type
G		
GFSK	Gaussian Frequency Shift Keying	
GIAC	General Inquiry Access Code	
H		
HCI	Host Controller Interface	
HEC	Header-Error-Check	
HID	Human Interface Device	
HV	High quality Voice	e.g. HV1 packet
HW	Hardware	
I		
IAC	Inquiry Access Code	
IEEE	Institute of Electronic and Electrical Engineers	
IETF	Internet Engineering Task Force	
IP	Internet Protocol	
IrDA	Infra-red Data Association	
ISM	Industrial, Scientific, Medical	
IUT	Implementation Under Test	

Table 1.1: Acronyms and Abbreviations

Acronym or abbreviation	Writing out in full	Which means
L		
L2CAP	Logical Link Control and Adaptation Protocol	
LAP	Lower Address Part	
LC	Link Controller	Link Controller (or baseband) part of the Bluetooth protocol stack. Low level Baseband protocol handler
LC	Link Control [logical link]	The control logical links LC and ACL-C are used at the link control level and link manager level, respectively.
LCP	Link Control Protocol	
LFSR	Linear Feedback Shift Register	
LLID	Logical Link Identifier	
LM	Link Manager	
LMP	Link Manager Protocol	For LM peer to peer communication
LR	Loudness Rating	
LSB	Least Significant Bit	
LSTO	Link Supervision Timeout Event	Controller can send LSTO event to Host
LT_ADDR	Logical Transport ADDRess	
M		
M	Master or Mandatory	
MAC	Medium Access Control	
Mbps	Million (Mega) bits per second	
MITM	Man-in-the-middle	
MMI	Man Machine Interface	
MS	Mobile Station	
MSB	Most Significant Bit	
MSC	Message Sequence Chart	
MTU	Maximum Transmission Unit	
N		
NAK	Negative Acknowledge	

Table 1.1: Acronyms and Abbreviations

Acronym or abbreviation	Writing out in full	Which means
NAP	Non-significant Address Part	
O		
O	Optional	
OBEX	OBject EXchange protocol	
OCF	OpCode Command Field	
OGF	OpCode Group Field	
P		
PBF	Packet Boundary Flag	The device supports the capability to correctly handle HCI ACL Data Packets
PCM	Pulse Coded Modulation	
PDU	Protocol Data Unit	a message
PIN	Personal Identification Number	
PM_ADDR	Parked Member Address	
PN	Pseudo-random Noise	
PPM	Part Per Million	
PPP	Point-to-Point Protocol	
PRBS	Pseudo Random Bit Sequence	
PRNG	Pseudo Random Noise Generation	
PSB	Parked Slave Broadcast [logical transport]	Unreliable, uni-directional broadcast to all piconet devices.
PSB-C	PSB Control [logical link] (LMP)	
PSB-U	PSB User [logical link] (L2CAP)	
PSK	Phase Shift Keying	Class of modulation types
PSTN	Public Switched Telephone Network	
ptt	Packet Type Table	The ptt parameter is used to select the logical transport types via LMP.
Q		
QoS	Quality of Service	
R		
RAND	Random number	
RF	Radio Frequency	

Table 1.1: Acronyms and Abbreviations

Acronym or abbreviation	Writing out in full	Which means
RFC	Request For Comments	
RFCMode	Retransmission and Flow Control Mode	
RFCOMM		Serial cable emulation protocol based on ETSI TS 07.10
RMS	Root Mean Square	
RSSI	Received Signal Strength Indication	
RX	Receive	
S		
S	Slave	
SAP	Service Access Points	
SAR	Segmentation and Reassembly	
SCO	Synchronous Connection-Oriented [logical transport]	Bi-directional, symmetric, point-to-point, AV channels.
SCO-S	Stream SCO (unframed)	
SCO-S	Synchronous logical link	used to support isochronous data delivered in a stream without framing
SD	Service Discovery	
SDP	Service Discovery Protocol	
SDU	Service Data Unit	
SEQN	Sequential Numbering scheme	
SLR	Send Loudness Ring	
SRES	Signed Response	
SS	Supplementary Services	
SSI	Signal Strength Indication	
SSP	Secure Simple Pairing	Simplifies the pairing process and improves Bluetooth security.
SSR	Sniff Subrating	A mode that defines the anchor points at which the master transmits to the slave.
SW	Software	
T		
TBD	To Be Defined	

Table 1.1: Acronyms and Abbreviations

Acronym or abbreviation	Writing out in full	Which means
TC	Test Control	Test Control layer for the test interface
TCI	Test Control Interface	
TCP/IP	Transport Control Protocol/Internet Protocol	
TCS	Telephony Control protocol Specification	
TDD	Time-Division Duplex	
TX	Transmit	
U		
UAP	Upper Address Part	
UART	Universal Asynchronous receiver Transmitter	
UI	User Interface	
UI	Unnumbered Information	
ULAP	Upper and Lower Address Parts	
USB	Universal Serial Bus	
UUID	Universal Unique Identifier	
W		
WAP	Wireless Application Protocol	

Table 1.1: Acronyms and Abbreviations

CORE SPECIFICATION CHANGE HISTORY

CONTENTS

1 Deprecated Features 86

2 Changes from V1.1 to V1.2 87

2.1 New Features 87

2.2 Structure Changes 87

2.3 Deprecated Features list 87

2.4 Changes in Wording 88

2.5 Nomenclature Changes 88

3 Changes from V1.2 to V2.0 + EDR 89

3.1 New Features 89

3.2 Deprecated Features 89

4 Changes from V2.0 + EDR to V2.1 + EDR 90

4.1 New features 90

4.2 Deprecated Features 90

5 Changes From V2.1 + EDR To V3.0 + HS 91

5.1 New Features 91

5.2 Deprecated Features 91

1 DEPRECATED FEATURES

Some features have been deemed no longer useful and have been deprecated. The term *deprecation* does not mean that they are no longer allowed, but that they are no longer recommended as the best way of performing a given function.

Features that have been deprecated are not included in this specification or corresponding test documentation. Deprecated features may be implemented using the latest qualifiable version of the Bluetooth core specification that specifies the deprecated features.

2 CHANGES FROM V1.1 TO V1.2

2.1 NEW FEATURES

Several new features were introduced in the Bluetooth Core Specification 1.2. The major areas of improvement are:

- Architectural overview
- Faster connection
- Adaptive frequency hopping
- Extended SCO links
- Enhanced error detection and flow control
- Enhanced synchronization capability
- Enhanced flow specification

The feature descriptions are incorporated into the existing text in different core parts, described in Volumes 2 and 3.

2.2 STRUCTURE CHANGES

The Bluetooth Core Specification 1.2 was significantly restructured for better consistency and readability. The most important structure changes have been performed in Baseband, LMP, HCI and L2CAP. The text in these sections has been rearranged to provide:

- Presentation of the information in a more logical progression
- Removal of redundant text and requirements
- Consolidation of baseband related requirements (for example, the *Baseband Timers* and *Bluetooth Audio* sections into the Baseband Specification)
- Alignment of the specification with the new architecture and terminology presented in the Architecture Overview (see “IEEE Language” on page 101 [vol. 1]).

In addition, new text and requirements were added for the new features as well as many changes throughout the specification to update the text to use IEEE language (see “IEEE Language” on page 101 [vol. 1]).

2.3 DEPRECATED FEATURES LIST

Features deprecated in version 1.2 are:

- The use of Unit Keys for security
- Optional Paging schemes
- 23 channel hopping sequence

- Page scan period mode and associated commands

2.4 CHANGES IN WORDING

Two general classes of changes to the wording of the Bluetooth Specification have been done for version 1.2. They are a formalization of the language by using conventions established by the Institute of Electrical and Electronic Engineers (IEEE), and a regularization of Bluetooth wireless technology-specific terms. Many portions of the version 1.1 specification use imprecise or inaccurate terms to describe attributes of the protocol. A more accurate terminology described in Part E was introduced into the version 1.2 specification and have been applied in future versions.

2.5 NOMENCLATURE CHANGES

The nomenclature in Bluetooth 1.2 was also updated due to new concepts that are introduced together with the new features and the new architecture. See “Architecture” on page 9.

3 CHANGES FROM V1.2 TO V2.0 + EDR

3.1 NEW FEATURES

The Bluetooth Core Specification version 2.0 + EDR introduces Enhanced Data Rate (EDR). EDR provides a set of additional packet types that use the new 2 Mbps and 3 Mbps modes.

In addition to EDR a set of errata provided in ESR02 has been incorporated into this version and revised to include changes caused by the addition of EDR.

These additions are incorporated into the existing text in different core parts described in Volumes 2 and 3.

3.2 DEPRECATED FEATURES

The only feature deprecated in version 2.0 + EDR is the Page Scan Period Mode and associated commands (based on Erratum 694 which is also included in ESR02).

4 CHANGES FROM V2.0 + EDR TO V2.1 + EDR

4.1 NEW FEATURES

Several new features are introduced in Bluetooth Core Specification 2.1 + EDR. The major areas of improvement are:

- Erroneous Data Reporting
- Encryption Pause and Resume
- Extended Inquiry Response
- Link Supervision Timeout Changed Event
- Non-Automatically-Flushable Packet Boundary Flag
- Secure Simple Pairing
- Sniff Subrating
- Security Mode 4

4.2 DEPRECATED FEATURES

No features were deprecated in v2.1 + EDR.

5 CHANGES FROM V2.1 + EDR TO V3.0 + HS

5.1 NEW FEATURES

Several new features are introduced in Bluetooth Core Specification v3.0 + HS. The major areas of improvement are:

- AMP Manager Protocol (A2MP)
- Enhancements to L2CAP including
  - Enhanced Retransmission Mode and Streaming Mode
  - Improvements to the L2CAP state machine for AMP channels
  - Fixed channel support
- Enhancements to HCI for AMP
- Enhancements to Security for AMP
- 802.11 Protocol Adaptation Layer
- Enhanced Power Control
- Unicast Connectionless Data
- HCI Read Encryption Key Size command
- Generic Test Methodology for AMP
- Enhanced USB and SDIO HCI Transports

5.2 DEPRECATED FEATURES

No features were deprecated in v3.0 + HS.

MIXING OF SPECIFICATION VERSIONS

CONTENTS

1 Mixing of Specification Versions 96

1.1 Features and their Types 98

1.2 Core Specification Addendums 99

1 MIXING OF SPECIFICATION VERSIONS

This part describes how volumes, and parts within volumes, of different versions of the Core Specification may be mixed in Bluetooth implementations. The Core System consists of a Controller Package (see Volume 2), a Host Package (see Volume 3) and AMP Protocol Adaption Layers (see Volume 5).

A Core Specification Addendum contains one or more parts of a single volume or one or more parts in multiple volumes. Addendums may be used to supersede a part in a volume or may be used to add a part to a volume according to the rules in Section 1.2.

- All parts within a BR/EDR implementation shall be the same version of Volume 2.
- All parts within a Host implementation of Volume 3 shall be the same version. An AMP Controller implementation shall contain parts of Volume 2 and Volume 5 from the same version.
- The BR/EDR Controller, AMP Controller, and Host may be different versions within a single implementation.

In order to describe how these volumes and parts within volumes can be mixed, one needs to distinguish between four categories of features specified in the different specification versions. The four categories are:

Category	Description
Type 1	Feature that exists below HCI and cannot be configured/enabled via HCI
Type 2	Feature that exists below HCI and can be configured/enabled via HCI
Type 3	Feature that exists below and above HCI and requires HCI command/events to function
Type 4	Feature that exists only above HCI

The outcome of mixing different core system packages are derived from the feature definitions in the table above:

- If an implementation contains features of type 1 or type 4, these features can function with any combination of Host Package and Controller Package or AMP Protocol Adaptation Layer (PAL) versions.
- If an implementation contains features of type 2, these features can only be used under a default condition if a Host Package of an older version is mixed with a Controller Package or AMP PAL of this version.
- In order to fully use the feature under all conditions, the Host Package, Controller Package, and AMP PAL must be of the same or later version.

- If an implementation contains features of type 3, these features can only function if the Host Package supports this version or a later version and if the Controller Package supports this version or a later version.

1.1 FEATURES AND THEIR TYPES

The following table lists the features and their types.

Feature	Version	Type
Basic AFH operation	V1.2	1
Enhanced inquiry	V1.2	1
Configuration of AFH (setting channels and enabling/disabling channel assessment)	V1.2	2
Enhanced synchronization capability	V1.2	2
Interlaced inquiry scan	V1.2	2
Interlaced page scan	V1.2	2
Broadcast encryption	V1.2	2
Enhanced flow specification and flush time-out	V1.2	3
Extended SCO links	V1.2	3
Inquiry Result with RSSI	V1.2	3
L2CAP flow and error control	V1.2	4
2 Mbps EDR	V2.0 + EDR	2
3 Mbps EDR	V2.0 + EDR	2
3 slot packets in EDR	V2.0 + EDR	2
5 slot packets in EDR	V2.0 + EDR	2
2 Mbps eSCO	V2.0 + EDR	2*
3 Mbps eSCO	V2.0 + EDR	2*
3 slot packets for EDR eSCO	V2.0 + EDR	2*
Erroneous Data Reporting	V2.1 + EDR	3
Extended Inquiry Response	V2.1 + EDR	3
Encryption Pause and Resume	V2.1 + EDR	1
Link Supervision Timeout Changed Event	V2.1 + EDR	3
Non-Flushable Packet Boundary Flag	V2.1 + EDR	3
Sniff subrating	V2.1+ EDR	3
Secure Simple Pairing	V2.1.+ EDR	3
L2CAP Enhanced Retransmission Mode	Addendum 1/ 3.0 + HS	4
L2CAP Streaming Mode	Addendum 1/ 3.0 + HS	4
Enhanced Power Control	3.0 + HS	2

Feature	Version	Type
AMP Manager Protocol (A2MP)	3.0 + HS	4
L2CAP Enhancements for AMP	3.0 + HS	4
802.11 PAL	3.0 + HS	3
Generic Test Methodology	3.0 + HS	3
Unicast Connectionless Data	3.0 + HS	4

The EDR eSCO options are marked as 2* because eSCO requires profile support, but if a product includes the eSCO option from V1.2, then EDR eSCO will be supported without any new support above HCI.

1.2 CORE SPECIFICATION ADDENDUMS

The following table contains a list of Core Specification Addendums and Core Specification versions they are allowed to be used with.

Each part within an addendum is identified by a type indicating whether it may replace a part in an allowed core specification version or whether it may add to a package within a core specification version.

Type	Description
Replacement	The part in the addendum is used instead of the equivalent part in the allowed specification versions.
Addition	The Part in the Addendum is used in addition to the existing parts in the allowed specification versions.

The following table lists adopted addendums.

Addendum	Volume and Part	Type	Allowed Versions
1	Volume 3, Part A	Replacement	V1.2, V2.0 + EDR, V2.1 + EDR

Architecture & Terminology Overview
Part E

IEEE LANGUAGE

CONTENTS

1 Use of IEEE Language 105

1.1 Shall 105

1.2 Must 106

1.3 Will 106

1.4 Should 106

1.5 May 106

1.6 Can 107

1 USE OF IEEE LANGUAGE

One of the purposes of this terminology is to make it easy for the reader to identify text that describes requirements as opposed to background information. The general term for text that describes attributes that are required for proper implementation of Bluetooth wireless technology is normative. The general term for language that provides background and context for normative text is informative. These terms are used in various sections to clarify implementation requirements.

Many portions of the Bluetooth Specification use imprecise or inaccurate terms to describe attributes of the protocol. This subsection describes the correct usage of key terms that indicate degree of requirements for processes and data structures. The information here was derived from the Institute of Electrical and Electronics Engineers (IEEE) Style Guide, see http://standards.ieee.org/guides/style/.

The following list is a summary of the terms to be discussed in more detail below:

shall	is required to – used to define requirements
must	is a natural consequence of -- used only to describe unavoidable situations
will	it is true that -- only used in statements of fact
should	is recommended that – used to indicate that among several possibilities one is recommended as particularly suitable, but not required
may	is permitted to – used to allow options
can	is able to – used to relate statements in a causal fashion
is	is defined as – used to further explain elements that are previously required or allowed
note	<informational text ONLY>

For clarity of the definition of those terms, the following sections document why and how they are used. For these sections only, the IEEE terms are italicized to indicate their use as a noun. Uses and examples of the use of the terms in this section are underlined.

1.1 SHALL

The word *shall* is used to indicate mandatory requirements that shall be followed in order to conform to the specification and from which no deviation is permitted.

There is a strong implication that the presence of the word *shall* indicates a testable requirement. All testable requirements shall be reflected in the Protocol Implementation Conformance Statement (PICS). In turn, all PICS indicators should be reflected in the Test Cases (TCs) either directly or indirectly.

A direct reference is a specific test for the attribute cited in the text. For example, a minimum value for a given parameter may be an entry in the TCs. Indirect test coverage may be appropriate if the existence of the attribute is requisite for passing a higher level test.

1.2 MUST

The word *must* shall not be used when stating mandatory requirements. *Must* is used only to describe unavoidable situations and is seldom appropriate for the text of a Specification.

An example of an appropriate use of the term *must* is: “the Bluetooth radios must be in range of each other to communicate”.

1.3 WILL

The use of the word *will* shall not be used when stating mandatory requirements. The term *will* is only used in statements of fact. As with the term *must*, *will* is not generally applicable to the description of a protocol. An example of appropriate use of will is: “when power is removed from the radio, it can be assumed that communications will fail”

1.4 SHOULD

Should equals *is recommended that*. The word *should* is used to indicate that among several possibilities one is recommended as particularly suitable without mentioning or excluding others. Alternatively it may indicate that a certain course of action is preferred but not necessarily required. Finally, in the negative form, it indicates a certain course of action is deprecated but not prohibited.

In the Bluetooth Specification the term designates an optional attribute that may require an entry in the PICS.

Explicit specification of alternatives should be done when using *should*.

1.5 MAY

The word *may* is used to indicate a course of action permissible within the limits of the specification. The term *may* equals *is permitted*. This is generally used when there is a single, optional attribute described, but multiple alternatives may be cited.

The use of *may* implies an optional condition in the PICS and therefore may need to be reflected in the corresponding test cases.

1.6 CAN

The word *can* is used for statements of possibility and capability, whether material, physical, or causal. The term *can* equals *is able to*.

The term *can* shall be used only in informative text. It describes capabilities by virtue of the rules established by normative text.

Specification Volume 2

SPECIFICATION OF THE *BLUETOOTH* SYSTEM

Wireless Connections Made Easy

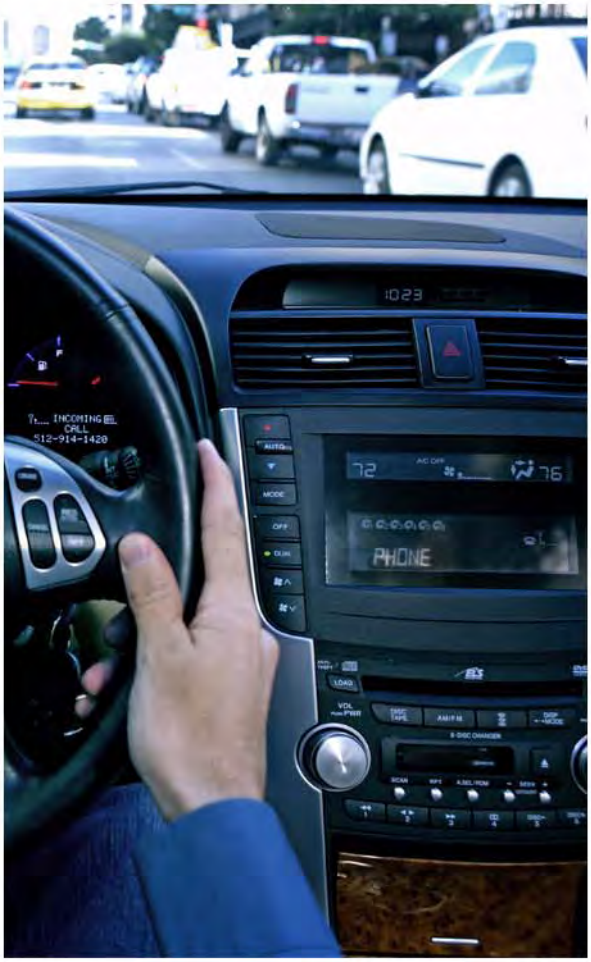

Core System Package

[Controller volume]

Covered Core Package version:
3.0 + HS

Bluetooth®

Revision History

The Revision History is shown in the “Appendix” on page 47[vol. 0].

Contributors

The persons who contributed to this specification are listed in the “Appendix” on page 47[vol. 0].

Web Site

This specification can also be found on the official Bluetooth web site: http://www.bluetooth.com

Disclaimer and Copyright Notice

The copyright in these specifications is owned by the Promoter Members of Bluetooth SIG, Inc. (“Bluetooth SIG”). Use of these specifications and any related intellectual property (collectively, the “Specification”), is governed by the Promoters Membership Agreement among the Promoter Members and Bluetooth SIG (the “Promoters Agreement”), certain membership agreements between Bluetooth SIG and its Adopter and Associate Members (the “Membership Agreements”) and the Bluetooth Specification Early Adopters Agreements (“1.2 Early Adopters Agreements”) among Early Adopter members of the unincorporated Bluetooth special interest group and the Promoter Members (the “Early Adopters Agreement”). Certain rights and obligations of the Promoter Members under the Early Adopters Agreements have been assigned to Bluetooth SIG by the Promoter Members.

Use of the Specification by anyone who is not a member of Bluetooth SIG or a party to an Early Adopters Agreement (each such person or party, a “Member”), is prohibited. The legal rights and obligations of each Member are governed by their applicable Membership Agreement, Early Adopters Agreement or Promoters Agreement. No license, express or implied, by estoppel or otherwise, to any intellectual property rights are granted herein.

Any use of the Specification not in compliance with the terms of the applicable Membership Agreement, Early Adopters Agreement or Promoters Agreement is prohibited and any such prohibited use may result in termination of the applicable Membership Agreement or Early Adopters Agreement and other liability permitted by the applicable agreement or by applicable law to Bluetooth SIG or any of its members for patent, copyright and/or trademark infringement.

THE SPECIFICATION IS PROVIDED “AS IS” WITH NO WARRANTIES WHATSOEVER, INCLUDING ANY WARRANTY OF MERCHANTABILITY, NONINFRINGEMENT, FITNESS FOR ANY PARTICULAR PURPOSE, SATISFACTORY QUALITY, OR REASONABLE SKILL OR CARE, OR ANY WARRANTY ARISING OUT OF ANY COURSE OF DEALING, USAGE, TRADE PRACTICE, PROPOSAL, SPECIFICATION OR SAMPLE.

Each Member hereby acknowledges that products equipped with the Bluetooth® technology (“Bluetooth® Products”) may be subject to various regulatory controls under the laws and regulations of various governments worldwide. Such laws and regulatory controls may govern, among other things, the combination, operation, use, implementation and distribution of Bluetooth® Products. Examples of such laws and regulatory controls include, but are not limited to, airline regulatory controls, telecommunications regulations, technology transfer controls and health and safety regulations. Each Member is solely responsible for the compliance by their Bluetooth® Products with any such laws and regulations and for obtaining any and all required authorizations, permits, or licenses for their Bluetooth® Products related to such regulations within the applicable jurisdictions. Each Member acknowledges that nothing in the Specification provides any information or assistance in connection with securing such compliance, authorizations or licenses. NOTHING IN THE SPECIFICATION CREATES ANY WARRANTIES, EITHER EXPRESS OR IMPLIED, REGARDING SUCH LAWS OR REGULATIONS.

ALL LIABILITY, INCLUDING LIABILITY FOR INFRINGEMENT OF ANY INTELLECTUAL PROPERTY RIGHTS OR FOR NONCOMPLIANCE WITH LAWS, RELATING TO USE OF THE SPECIFICATION IS EXPRESSLY DISCLAIMED. BY USE OF THE SPECIFICATION, EACH MEMBER EXPRESSLY WAIVES ANY CLAIM AGAINST BLUETOOTH SIG AND ITS PROMOTER MEMBERS RELATED TO USE OF THE SPECIFICATION.

Bluetooth SIG reserves the right to adopt any changes or alterations to the Specification as it deems necessary or appropriate.

Copyright © 1999–2009

Ericsson AB,
Lenovo,
Intel Corporation,
Microsoft Corporation,
Motorola, Inc.,
Nokia Corporation,
Toshiba Corporation

*Third-party brands and names are the property of their respective owners.

CONTENTS

Part A
RADIO SPECIFICATION

Contents 29
1 Scope 31
2 Frequency Bands and Channel Arrangement 33
3 Transmitter Characteristics 34
3.1 Basic Rate 35
3.1.1 Modulation Characteristics 35
3.1.2 Spurious Emissions 36
3.1.3 Radio Frequency Tolerance 37
3.2 Enhanced Data Rate 37
3.2.1 Modulation Characteristics 38
3.2.2 Spurious Emissions 41
3.2.3 Radio Frequency Tolerance 42
3.2.4 Relative Transmit Power 43
4 Receiver Characteristics 44
4.1 Basic Rate 44
4.1.1 Actual Sensitivity Level 44
4.1.2 Interference Performance 44
4.1.3 Out-of-Band Blocking 45
4.1.4 Intermodulation Characteristics 45
4.1.5 Maximum Usable Level 46
4.1.6 Receiver Signal Strength Indicator 46
4.1.7 Reference Signal Definition 46
4.2 Enhanced Data Rate 46
4.2.1 Actual Sensitivity Level 46
4.2.2 BER Floor Performance 46
4.2.3 Interference Performance 46
4.2.4 Maximum Usable Level 47
4.2.5 Out-of-Band and Intermodulation Characteristics 48
4.2.6 Reference Signal Definition 48
5 Appendix A 49
5.1 Nominal Test Conditions 49
5.1.1 Nominal temperature 49

5.1.2 Nominal power source 49
5.2 Extreme Test Conditions 50
5.2.1 Extreme temperatures 50
5.2.2 Extreme power source voltages 50
6 Appendix B 51
7 Appendix C 52
7.1 Enhanced Data Rate Modulation Accuracy 52

Part B
BASEBAND SPECIFICATION

Contents 59
1 General Description 63
1.1 Bluetooth Clock 64
1.2 Bluetooth Device Addressing 66
1.2.1 Reserved Addresses 66
1.3 Access Codes 67
2 Physical Channels 68
2.1 Physical Channel Definition 69
2.2 Basic Piconet Physical Channel 69
2.2.1 Master-slave Definition 69
2.2.2 Hopping Characteristics 70
2.2.3 Time Slots 70
2.2.4 Piconet clocks 71
2.2.5 Transmit/receive Timing 71
2.3 Adapted Piconet Physical Channel 74
2.3.1 Hopping Characteristics 74
2.4 Page Scan Physical Channel 75
2.4.1 Clock Estimate for Paging 75
2.4.2 Hopping Characteristics 75
2.4.3 Paging Procedure Timing 76
2.4.4 Page Response Timing 77
2.5 Inquiry Scan Physical Channel 79
2.5.1 Clock for Inquiry 79
2.5.2 Hopping Characteristics 79
2.5.3 Inquiry Procedure Timing 79
2.5.4 Inquiry Response Timing 79
2.6 Hop Selection 81
2.6.1 General Selection Scheme 81
2.6.2 Selection Kernel 85

2.6.3 Adapted Hop Selection Kernel 88
2.6.4 Control Word 89
3 Physical Links 94
3.1 Link Supervision 94
4 Logical Transports 95
4.1 General 95
4.2 Logical Transport Address (LT_ADDR) 95
4.3 Synchronous Logical Transports 96
4.4 Asynchronous Logical Transport 96
4.5 Transmit/Receive Routines 97
4.5.1 TX Routine 97
4.5.2 RX Routine 100
4.5.3 Flow Control 101
4.6 Active Slave Broadcast Transport 102
4.7 Parked Slave Broadcast Transport 103
4.7.1 Parked Member Address (PM_ADDR) 103
4.7.2 Access Request Address (AR_ADDR) 103
5 Logical Links 104
5.1 Link Control Logical Link (LC) 104
5.2 ACL Control Logical Link (ACL-C) 104
5.3 User Asynchronous/Isochronous Logical Link (ACL-U) 104
5.3.1 Pausing the ACL-U logical link 105
5.4 User Synchronous Data Logical Link (SCO-S) 105
5.5 User Extended Synchronous Data Logical Link (eSCO-S) 105
5.6 Logical Link Priorities 105
6 Packets 106
6.1 General Format 106
6.1.1 Basic Rate 106
6.1.2 Enhanced Data Rate 106
6.2 Bit Ordering 107
6.3 Access Code 108
6.3.1 Access Code Types 108
6.3.2 Preamble 109
6.3.3 Sync Word 109
6.3.4 Trailer 112
6.4 Packet Header 113
6.4.1 LT_ADDR 113
6.4.2 TYPE 113
6.4.3 FLOW 114

6.4.4 ARQN 114
6.4.5 SEQN 114
6.4.6 HEC 114
6.5 Packet Types 115
6.5.1 Common Packet Types 116
6.5.2 SCO Packets 120
6.5.3 eSCO Packets 121
6.5.4 ACL Packets 123
6.6 Payload Format 125
6.6.1 Synchronous Data Field 125
6.6.2 Asynchronous Data Field 127
6.7 Packet Summary 130
7 Bitstream Processing 132
7.1 Error Checking 133
7.1.1 HEC Generation 133
7.1.2 CRC Generation 134
7.2 Data Whitening 136
7.3 Error Correction 137
7.4 FEC Code: Rate 1/3 137
7.5 FEC Code: Rate 2/3 138
7.6 ARQ Scheme 139
7.6.1 Unnumbered ARQ 139
7.6.2 Retransmit Filtering 142
7.6.3 Flushing Payloads 145
7.6.4 Multi-slave Considerations 145
7.6.5 Broadcast Packets 146
7.7 Erroneous Synchronous Data Reporting 147
8 Link Controller Operation 148
8.1 Overview of States 148
8.2 Standby State 149
8.3 Connection Establishment Substates 149
8.3.1 Page Scan Substate 149
8.3.2 Page substate 151
8.3.3 Page Response Substates 154
8.4 Device Discovery Substates 158
8.4.1 Inquiry scan substate 159
8.4.2 Inquiry Substate 160
8.4.3 Inquiry Response Substate 161
8.5 Connection State 163

8.6 Active Mode 164
8.6.1 Polling in the Active Mode 165
8.6.2 SCO 165
8.6.3 eSCO 167
8.6.4 Broadcast Scheme 169
8.6.5 Role Switch 170
8.6.6 Scatternet 172
8.6.7 Hop Sequence Switching 173
8.6.8 Channel Classification and Channel Map Selection 176
8.6.9 Power Management 177
8.7 Sniff Mode 178
8.7.1 Sniff Transition Mode 179
8.7.2 Sniff Subrating 180
8.8 Hold Mode 181
8.9 Park State 182
8.9.1 Beacon Train 182
8.9.2 Beacon Access Window 185
8.9.3 Parked Slave Synchronization 186
8.9.4 Parking 187
8.9.5 Master-initiated Unparking 188
8.9.6 Slave-initiated Unparking 188
8.9.7 Broadcast Scan Window 189
8.9.8 Polling in the Park State 189

9 Audio 190
9.1 LOG PCM CODEC 190
9.2 CVSD CODEC 190
9.3 Error Handling 193
9.4 General Audio Requirements 193
9.4.1 Signal Levels 193
9.4.2 CVSD Audio Quality 193

10 List of Figures 194

11 List of Tables 197
Appendix A: General Audio Recommendations 198
Appendix B: mers 201
Appendix C: Recommendations for AFH Operation in Park, Hold, and Sniff 203

Part C
LINK MANAGER PROTOCOL SPECIFICATION

Contents **207**

1 Introduction **209**

2 General Rules **210**

2.1 Message Transport 210
2.2 Synchronization 210
2.3 Packet Format 211
2.4 Transactions 212
2.4.1 LMP Response Timeout 213
2.5 Error Handling 213
2.5.1 Transaction Collision Resolution 214
2.6 Procedure Rules 214
2.7 General Response Messages 215
2.8 LMP Message Constraints 215

3 Device Features **216**

3.1 General Description 216
3.2 Feature Definitions 216
3.3 Feature Mask Definition 222
3.4 Link Manager Interoperability policy 224

4 Procedure Rules **225**

4.1 Connection Control 225
4.1.1 Connection Establishment 225
4.1.2 Detach 226
4.1.3 Power Control 227
4.1.4 Adaptive Frequency Hopping 231
4.1.5 Channel Classification 234
4.1.6 Link Supervision 236
4.1.7 Channel Quality Driven Data Rate Change (CQDDR) 237
4.1.8 Quality of Service (QoS) 238
4.1.9 Paging Scheme Parameters 240
4.1.10 Control of Multi-slot Packets 241
4.1.11 Enhanced Data Rate 241
4.1.12 Encapsulated LMP PDUs 243
4.2 Security 244
4.2.1 Authentication 244
4.2.2 Pairing 246
4.2.3 Change Link Key 249
4.2.4 Change Current Link Key Type 250
4.2.5 Encryption 252
4.2.6 Request Supported Encryption Key Size 259

4.2.7 Secure Simple Pairing 259
4.3 Informational Requests 272
4.3.1 Timing Accuracy 272
4.3.2 Clock Offset 274
4.3.3 LMP version 274
4.3.4 Supported Features 275
4.3.5 Name Request 277
4.4 Role Switch 278
4.4.1 Slot Offset 278
4.4.2 Role Switch 279
4.5 Modes of Operation 281
4.5.1 Hold Mode 281
4.5.2 Park State 283
4.5.3 Sniff Mode 290
4.6 Logical Transports 294
4.6.1 SCO Logical Transport 294
4.6.2 eSCO Logical Transport 297
4.7 Test Mode 302
4.7.1 Activation and Deactivation of Test Mode 302
4.7.2 Control of Test Mode 303
4.7.3 Summary of Test Mode PDUs 303

5 Summary 307
5.1 PDU Summary 307
5.2 Parameter Definitions 317
5.3 LMP Encapsulated 328
5.4 Default Values 329

6 List of Figures 330

7 List of Tables 334

Part D
ERROR CODES

Contents 337

1 Overview of Error Codes 339
1.1 Usage Descriptions 339
1.2 HCI Command Errors 339
1.3 List of Error Codes 340

2 Error Code Descriptions 342
2.1 Unknown HCI Command (0X01) 342
2.2 Unknown Connection Identifier (0X02) 342

2.3 Hardware Failure (0X03) 342
2.4 Page Timeout (0X04) 342
2.5 Authentication Failure (0X05) 342
2.6 PIN or key Missing (0X06) 342
2.7 Memory Capacity Exceeded (0X07) 342
2.8 Connection Timeout (0X08) 343
2.9 Connection Limit Exceeded (0X09) 343
2.10 Synchronous Connection Limit to a Device Exceeded (0X0A) 343
2.11 ACL Connection Already Exists (0X0B) 343
2.12 Command Disallowed (0X0C) 343
2.13 Connection Rejected due to Limited Resources (0X0D) 343
2.14 Connection Rejected due to Security Reasons (0X0E) 343
2.15 Connection Rejected due to Unacceptable BD_ADDR (0X0F) 344
2.16 Connection Accept Timeout Exceeded (0X10) 344
2.17 Unsupported Feature or Parameter Value (0X11) 344
2.18 Invalid HCI Command Parameters (0X12) 344
2.19 Remote User Terminated Connection (0X13) 344
2.20 Remote Device Terminated Connection due to Low Resources (0X14) 345
2.21 Remote Device Terminated Connection due to Power Off (0X15) 345
2.22 Connection Terminated by Local Host (0X16) 345
2.23 Repeated Attempts (0X17) 345
2.24 Pairing not Allowed (0X18) 345
2.25 Unknown LMP PDU (0X19) 345
2.26 Unsupported Remote Feature / Unsupported LMP Feature (0X1A) 345
2.27 SCO Offset Rejected (0X1B) 345
2.28 SCO Interval Rejected (0X1C) 346
2.29 SCO Air Mode Rejected (0X1D) 346
2.30 Invalid LMP Parameters (0X1E) 346
2.31 Unspecified Error (0X1F) 346
2.32 Unsupported LMP Parameter Value (0X20) 346
2.33 Role Change Not Allowed (0X21) 346
2.34 LMP Response Timeout (0X22) 346
2.35 LMP Error Transaction Collision (0X23) 347
2.36 LMP PDU Not Allowed (0X24) 347
2.37 Encryption Mode Not Acceptable (0X25) 347
2.38 Link Key Can Not be Changed (0X26) 347
2.39 Requested QoS Not Supported (0X27) 347
2.40 Instant Passed (0X28) 347
2.41 Pairing with Unit Key Not Supported (0X29) 347
2.42 Different Transaction Collision (0x2A) 347

2.43 QoS Unacceptable Parameter (0X2C) 347
2.44 QoS Rejected (0X2D) 348
2.45 Channel Assessment Not Supported (0X2E) 348
2.46 Insufficient Security (0X2F) 348
2.47 Parameter out of Mandatory Range (0X30) 348
2.48 Role Switch Pending (0X32) 348
2.49 Reserved Slot Violation (0X34) 348
2.50 Role Switch Failed (0X35) 348
2.51 Extended Inquiry Response Too Large (0x36) 348
2.52 Simple Pairing Not Supported By Host (0X37) 349
2.53 Host Busy–Pairing(0X38) 349
2.54 Connection Rejected Due To No Suitable Channel Found (0X39) 349
2.55 Controller Busy (0X3A) 349

Part E
HOST CONTROLLER INTERFACE FUNCTIONAL SPECIFICATION

Contents 353

1 Introduction 362
1.1 Lower Layers of the Bluetooth Software Stack 362

2 Overview of Host Controller Transport Layer 364
2.1 Host Controller Transport Layer and AMPS 364

3 Overview of Commands and Events 365
3.1 Generic Events 366
3.2 Device Setup 366
3.3 Controller Flow Control 367
3.4 Controller Information 368
3.5 Controller Configuration 369
3.6 Device Discovery 372
3.7 Connection Setup 374
3.8 Remote Information 379
3.9 Synchronous Connections 380
3.10 Connection State 381
3.11 Piconet Structure 383
3.12 Quality of Service 384
3.13 Physical Links 386
3.14 Host Flow Control 388
3.15 Link Information 389
3.16 Authentication and Encryption 390
3.17 Testing 394
3.18 Alphabetical List of Commands and Events 397

4 HCI Flow Control 404
4.1 Host to Controller Data Flow Control 404
4.1.1 Packet-based Data Flow Control 404
4.1.2 Data-Block-Based Data Flow Control 405
4.2 Controller to Host Data Flow Control 406
4.3 Disconnection Behavior 407
4.4 Command Flow Control 407
4.5 Command Error Handling 408
5 HCI Data Formats 409
5.1 Introduction 409
5.2 Data and Parameter Formats 409
5.3 Handles 410
5.3.1 BR/EDR Controller Handles 410
5.3.2 AMP Controller Handles 411
5.4 Exchange of HCI-Specific Information 412
5.4.1 HCI Command Packet 412
5.4.2 HCI ACL Data Packets 414
5.4.3 HCI Synchronous Data Packets 416
5.4.4 HCI Event Packet 418
6 HCI Configuration Parameters 419
6.1 Scan Enable 419
6.2 Inquiry Scan Interval 419
6.3 Inquiry Scan Window 420
6.4 Inquiry Scan Type 420
6.5 Inquiry Mode 420
6.6 Page Timeout 421
6.7 Connection Accept Timeout 421
6.8 Page Scan Interval 422
6.9 Page Scan Window 422
6.10 Page Scan Period Mode (Deprecated) 422
6.11 Page Scan Type 423
6.12 Voice Setting 423
6.13 PIN Type 424
6.14 Link Key 424
6.15 Failed Contact Counter 424
6.16 Hold Mode Activity 425
6.17 Link Policy Settings 426
6.18 Flush Timeout 427
6.19 Num Broadcast Retransmissions 427
6.20 Link Supervision Timeout 428
6.21 Synchronous Flow Control Enable 428

6.22 Local Name 429
6.23 Extended Inquiry Response 429
6.24 Erroneous Data Reporting 429
6.25 Class Of Device 430
6.26 Supported Commands 430
6.27 Logical Link Accept Timeout 436
6.28 Location Domain Aware 437
6.29 Location Domain 437
6.30 Location Domain Options 437
6.31 Location Options 438
6.32 Flow Control Mode 438

7 HCI Commands and Events 439

7.1 Link Control Commands 439
7.1.1 Inquiry Command 439
7.1.2 Inquiry Cancel Command 441
7.1.3 Periodic Inquiry Mode Command 441
7.1.4 Exit Periodic Inquiry Mode Command 444
7.1.5 Create Connection Command 445
7.1.6 Disconnect Command 448
7.1.7 Create Connection Cancel Command 449
7.1.8 Accept Connection Request Command 450
7.1.9 Reject Connection Request Command 451
7.1.10 Link Key Request Reply Command 453
7.1.11 Link Key Request Negative Reply Command 454
7.1.12 PIN Code Request Reply Command 455
7.1.13 PIN Code Request Negative Reply Command 457
7.1.14 Change Connection Packet Type Command 458
7.1.15 Authentication Requested Command 461
7.1.16 Set Connection Encryption Command 462
7.1.17 Change Connection Link Key Command 463
7.1.18 Master Link Key Command 464
7.1.19 Remote Name Request Command 465
7.1.20 Remote Name Request Cancel Command 467
7.1.21 Read Remote Supported Features Command 468
7.1.22 Read Remote Extended Features Command 469
7.1.23 Read Remote Version Information Command 470
7.1.24 Read Clock Offset Command 471
7.1.25 Read LMP Handle Command 472
7.1.26 Setup Synchronous Connection Command 473

7.1.27 Accept Synchronous Connection Request Command 477
7.1.28 Reject Synchronous Connection Request Command. 481
7.1.29 IO Capability Request Reply Command 482
7.1.30 User Confirmation Request Reply Command 484
7.1.31 User Confirmation Request Negative Reply Command 485
7.1.32 User Passkey Request Reply Command 487
7.1.33 User Passkey Request Negative Reply Command..... 488
7.1.34 Remote OOB Data Request Reply Command 489
7.1.35 Remote OOB Data Request Negative Reply Command 490
7.1.36 IO Capability Request Negative Reply Command 491
7.1.37 Create Physical Link Command 492
7.1.38 Accept Physical Link Request Command 494
7.1.39 Disconnect Physical Link Command 496
7.1.40 Create Logical Link Command 497
7.1.41 Accept Logical Link Command 498
7.1.42 Disconnect Logical Link Command 500
7.1.43 Logical Link Cancel Command 501
7.1.44 Flow Spec Modify Command 502
7.2 Link Policy Commands 503
7.2.1 Hold Mode Command 504
7.2.2 Sniff Mode Command 506
7.2.3 Exit Sniff Mode Command 508
7.2.4 Park State Command 509
7.2.5 Exit Park State Command 511
7.2.6 QoS Setup Command 512
7.2.7 Role Discovery Command 514
7.2.8 Switch Role Command 515
7.2.9 Read Link Policy Settings Command 516
7.2.10 Write Link Policy Settings Command 517
7.2.11 Read Default Link Policy Settings Command 519
7.2.12 Write Default Link Policy Settings Command 520
7.2.13 Flow Specification Command 521
7.2.14 Sniff Subrating Command 523
7.3 Controller & Baseband Commands 524
7.3.1 Set Event Mask Command 525
7.3.2 Reset Command 528

7.3.3 Set Event Filter Command 529
7.3.4 Flush Command 534
7.3.5 Read PIN Type Command 536
7.3.6 Write PIN Type Command 537
7.3.7 Create New Unit Key Command 538
7.3.8 Read Stored Link Key Command 539
7.3.9 Write Stored Link Key Command 541
7.3.10 Delete Stored Link Key Command 543
7.3.11 Write Local Name Command 544
7.3.12 Read Local Name Command 545
7.3.13 Read Connection Accept Timeout Command 546
7.3.14 Write Connection Accept Timeout Command 547
7.3.15 Read Page Timeout Command 548
7.3.16 Write Page Timeout Command 549
7.3.17 Read Scan Enable Command 550
7.3.18 Write Scan Enable Command 551
7.3.19 Read Page Scan Activity Command 552
7.3.20 Write Page Scan Activity Command 553
7.3.21 Read Inquiry Scan Activity Command 554
7.3.22 Write Inquiry Scan Activity Command 556
7.3.23 Read Authentication Enable Command 557
7.3.24 Write Authentication Enable Command 557
7.3.25 Read Class of Device Command 559
7.3.26 Write Class of Device Command 559
7.3.27 Read Voice Setting Command 561
7.3.28 Write Voice Setting Command 562
7.3.29 Read Automatic Flush Timeout Command 563
7.3.30 Write Automatic Flush Timeout Command 564
7.3.31 Read Num Broadcast Retransmissions Command 565
7.3.32 Write Num Broadcast Retransmissions Command 566
7.3.33 Read Hold Mode Activity Command 567
7.3.34 Write Hold Mode Activity Command 568
7.3.35 Read Transmit Power Level Command 569
7.3.36 Read Synchronous Flow Control Enable Command 570
7.3.37 Write Synchronous Flow Control Enable Command 571
7.3.38 Set Controller To Host Flow Control Command 572
7.3.39 Host Buffer Size Command 573
7.3.40 Host Number Of Completed Packets Command 575

7.3.41 Read Link Supervision Timeout Command 577
7.3.42 Write Link Supervision Timeout Command 578
7.3.43 Read Number Of Supported IAC Command 579
7.3.44 Read Current IAC LAP Command 581
7.3.45 Write Current IAC LAP Command 582
7.3.46 Set AFH Host Channel Classification Command 583
7.3.47 Read Inquiry Scan Type Command 584
7.3.48 Write Inquiry Scan Type Command 585
7.3.49 Read Inquiry Mode Command 586
7.3.50 Write Inquiry Mode Command 587
7.3.51 Read Page Scan Type Command 588
7.3.52 Write Page Scan Type Command 589
7.3.53 Read AFH Channel Assessment Mode Command 590
7.3.54 Write AFH Channel Assessment Mode Command 591
7.3.55 Read Extended Inquiry Response Command 592
7.3.56 Write Extended Inquiry Response Command 593
7.3.57 Refresh Encryption Key Command 594
7.3.58 Read Simple Pairing Mode Command 595
7.3.59 Write Simple Pairing Mode Command 596
7.3.60 Read Local OOB Data Command 597
7.3.61 Read Inquiry Response Transmit Power Level Command 598
7.3.62 Write Inquiry Transmit Power Level Command 599
7.3.63 Send Keypress Notification Command 600
7.3.64 Read Default Erroneous Data Reporting 601
7.3.65 Write Default Erroneous Data Reporting 602
7.3.66 Enhanced Flush Command 603
7.3.67 Read Logical Link Accept Timeout Command 604
7.3.68 Write Logical Link Accept Timeout Command 605
7.3.69 Set Event Mask Page 2 Command 606
7.3.70 Read Location Data Command 607
7.3.71 Write Location Data Command 608
7.3.72 Read Flow Control Mode Command 609
7.3.73 Write Flow Control Mode Command 609
7.3.74 Read Enhanced Transmit Power Level Command 610
7.3.75 Read Best Effort Flush Timeout Command 612
7.3.76 Write Best Effort Flush Timeout Command 613
7.3.77 Short Range Mode Command 614

7.4 Informational Parameters....615
7.4.1 Read Local Version Information Command....615
7.4.2 Read Local Supported Commands Command....617
7.4.3 Read Local Supported Features Command....618
7.4.4 Read Local Extended Features Command....619
7.4.5 Read Buffer Size Command....620
7.4.6 Read BD_ADDR Command....622
7.4.7 Read Data Block Size Command....623
7.5 Status Parameters....624
7.5.1 Read Failed Contact Counter Command....624
7.5.2 Reset Failed Contact Counter Command....625
7.5.3 Read Link Quality Command....626
7.5.4 Read RSSI Command....628
7.5.5 Read AFH Channel Map Command....629
7.5.6 Read Clock Command....632
7.5.7 Read Encryption Key Size Command....633
7.5.8 Read Local AMP Info Command....635
7.5.9 Read Local AMP ASSOC Command....639
7.5.10 Write Remote AMP ASSOC Command....641
7.6 Testing Commands....644
7.6.1 Read Loopback Mode Command....644
7.6.2 Write Loopback Mode Command....645
7.6.3 Enable Device Under Test Mode Command....649
7.6.4 Write Simple Pairing Debug Mode Command....650
7.6.5 Enable AMP Receiver Reports Command....651
7.6.6 AMP Test End Command....652
7.6.7 AMP Test Command....653
7.7 Events....654
7.7.1 Inquiry Complete Event....654
7.7.2 Inquiry Result Event....654
7.7.3 Connection Complete Event....657
7.7.4 Connection Request Event....658
7.7.5 Disconnection Complete Event....659
7.7.6 Authentication Complete Event....660
7.7.7 Remote Name Request Complete Event....661
7.7.8 Encryption Change Event....662
7.7.9 Change Connection Link Key Complete Event....663
7.7.10 Master Link Key Complete Event....663

7.7.11 Read Remote Supported Features Complete Event...664
7.7.12 Read Remote Version Information Complete Event ...665
7.7.13 QoS Setup Complete Event ...666
7.7.14 Command Complete Event ...669
7.7.15 Command Status Event ...670
7.7.16 Hardware Error Event ...671
7.7.17 Flush Occurred Event ...671
7.7.18 Role Change Event ...672
7.7.19 Number Of Completed Packets Event ...672
7.7.20 Mode Change Event ...674
7.7.21 Return Link Keys Event...675
7.7.22 PIN Code Request Event ...676
7.7.23 Link Key Request Event...677
7.7.24 Link Key Notification Event ...678
7.7.25 Loopback Command Event...679
7.7.26 Data Buffer Overflow Event...679
7.7.27 Max Slots Change Event...680
7.7.28 Read Clock Offset Complete Event ...681
7.7.29 Connection Packet Type Changed Event ...682
7.7.30 QoS Violation Event ...683
7.7.31 Page Scan Repetition Mode Change Event...685
7.7.32 Flow Specification Complete Event...686
7.7.33 Inquiry Result with RSSI Event ...688
7.7.34 Read Remote Extended Features Complete Event ...690
7.7.35 Synchronous Connection Complete Event ...691
7.7.36 Synchronous Connection Changed Event ...692
7.7.37 Sniff Subrating Event ...694
7.7.38 Extended Inquiry Result Event...695
7.7.39 Encryption Key Refresh Complete ...698
7.7.40 IO Capability Request Event ...699
7.7.41 IO Capability Response Event ...700
7.7.42 User Confirmation Request Event...701
7.7.43 User Passkey Request Event ...702
7.7.44 Remote OOB Data Request Event ...702
7.7.45 Simple Pairing Complete Event ...703
7.7.46 Link Supervision Timeout Changed Event ...704
7.7.47 Enhanced Flush Complete Event...705
7.7.48 User Passkey Notification Event ...705

7.7.49 Keypress Notification Event 706
7.7.50 Remote Host Supported Features Notification Event.. 706
7.7.51 Physical Link Complete Event 707
7.7.52 Channel Selected Event 708
7.7.53 Disconnection Physical Link Complete Event 708
7.7.54 Physical Link Loss Early Warning Event 709
7.7.55 Physical Link Recovery Event 710
7.7.56 Logical Link Complete Event 710
7.7.57 Disconnection Logical Link Complete Event 711
7.7.58 Flow Spec Modify Complete Event 712
7.7.59 Number Of Completed Data Blocks Event 713
7.7.60 Short Range Mode Change Complete Event 715
7.7.61 AMP Status Change Event 716
7.7.62 AMP Start Test Event 718
7.7.63 AMP Test End Event 718
7.7.64 AMP Receiver Report Event 719

8 List of Figures 721

9 List of Tables 722

10 Appendix A: Deprecated Commands, Events and Configuration Parameters 723

10.1 Read Page Scan Mode Command 724
10.2 Write Page Scan Mode Command 725
10.3 Read Page Scan Period Mode Command 726
10.4 Write Page Scan Period Mode Command 727
10.5 Add SCO Connection Command 728
10.6 Page Scan Mode Change Event 730
10.7 Read Country Code Command 731
10.8 Read Encryption Mode Command 732
10.9 Write Encryption Mode Command 732
10.10 Deprecated Parameters 733
10.10.1 Authentication Enable 733
10.10.2 Encryption Mode 733
10.10.3 Page Scan Mode 734

Part F
MESSAGE SEQUENCE CHARTS

Contents 737

1 Introduction 739

1.1 Notation 739

1.2 Flow of Control 740
1.3 Example MSC 740
2 Services Without Connection Request 741
2.1 Remote Name Request 741
2.2 One-time Inquiry 743
2.3 Periodic Inquiry 745
3 ACL Connection Establishment and Detachment 747
3.1 Connection Setup 748
4 Optional Activities After ACL Connection Establishment 755
4.1 Authentication Requested 755
4.2 Simple Pairing Message Sequence Charts 756
4.2.1 Optional OOB Information Collection 756
4.2.2 Enable Simple Pairing 757
4.2.3 Connection Establishment 757
4.2.4 L2CAP Connection Request for a Secure Service 757
4.2.5 Optional OOB Information Transfer 758
4.2.6 Start Simple Pairing 758
4.2.7 IO Capability Exchange 759
4.2.8 Public Key Exchange 759
4.2.9 Authentication 760
4.2.10 Numeric Comparison 760
4.2.11 Numeric Comparison Failure on Initiating Side 761
4.2.12 Numeric Comparison Failure on Responding Side 762
4.2.13 Passkey Entry 763
4.2.14 Passkey Entry Failure on Responding Side 764
4.2.15 Passkey Entry Failure on Initiator Side 765
4.2.16 Out of Band 765
4.2.17 OOB Failure on Initiator Side 766
4.2.18 DHKey Checks 767
4.2.19 Calculate Link Key 767
4.2.20 Enable Encryption 768
4.2.21 L2CAP Connection Response 769
4.3 Link Supervision Timeout Changed Event 769
4.4 Set Connection Encryption 770
4.5 Change Connection Link Key 771
4.6 Change Connection Link Key with Encryption Pause and Resume 771
4.7 Master Link Key 773
4.8 Read Remote Supported Features 775

4.9 Read Remote Extended Features....775
4.10 Read Clock Offset....776
4.11 Role Switch on an Encrypted Link using Encryption Pause and Resume....776
4.12 Refreshing Encryption Keys....777
4.13 Read Remote Version Information....778
4.14 QOS Setup....778
4.15 Switch Role....779
4.16 AMP Physical Link Creation and Disconnect....780
4.16.1 Physical Link Establishment....781
4.16.2 Logical Link Creation....784
4.17 AMP Test Mode Sequence Charts....787
4.17.1 Discover the AMP Present and Running Transmitter and Receiver Tests....787

5 Synchronous Connection Establishment and Detachment....791
5.1 Synchronous Connection Setup....791

6 Sniff, Hold and Park....796
6.1 Sniff Mode....796
6.2 Hold Mode....797
6.3 Park State....799

7 Buffer Management, Flow Control....802

8 Loopback Mode....804
8.1 Local Loopback Mode....804
8.2 Remote Loopback Mode....806

9 List of Figures....808

Part G
SAMPLE DATA

Contents....813

1 Encryption Sample Data....815
1.1 Generating Kc' from Kc,....815
1.2 First Set of Sample Data....818
1.3 Second Set of Sample Data....826
1.4 Third Set of Samples....834
1.5 Fourth Set of Samples....842

2 Frequency Hopping Sample Data....850
2.1 First set....851
2.2 Second set....857
2.3 Third set....863

3 Access Code Sample Data....869

4 HEC and Packet Header Sample Data 872

5 CRC Sample Data 873

6 Complete Sample Packets 874

6.1 Example of DH1 Packet 874

6.2 Example of DM1 Packet 875

7 Simple Pairing Sample Data 876

7.1 P-192 Sample Data 876

7.1.1 Data Set 1 876

7.1.2 Data Set 2 876

7.1.3 Data Set 3 876

7.1.4 Data Set 4 876

7.1.5 Data Set 5 876

7.1.6 Data Set 6 877

7.1.7 Data Set 7 877

7.1.8 Data Set 8 877

7.1.9 Data Set 9 877

7.1.10 Data Set 10 877

7.2 Hash Functions Sample Data 877

7.2.1 f1() 878

7.2.2 g() 879

7.2.3 f2() 879

7.2.4 f3() 879

7.2.5 h2() 886

8 Whitening Sequence Sample Data 888

9 FEC Sample Data 891

10 Encryption Key Sample Data 892

10.1 Four Tests of E1 892

10.2 Four Tests of E21 897

10.3 Three Tests of E22 899

10.4 Tests of E22 With Pin Augmenting 901

10.5 Four Tests of E3 911

Part H
SECURITY SPECIFICATION

Contents 919

1 Security Overview 921

1.1 Pausing Encryption and Role Switch 922

1.2 Change Connection Link Keys 922

1.3 Periodically Refreshing Encryption Keys 922
2 Random Number Generation 923
3 Key Management....925
3.1 Key Types 925
3.2 Key Generation and Initialization 927
3.2.1 Generation of initialization key, ...928
3.2.2 Authentication....928
3.2.3 Generation of a unit key 928
3.2.4 Generation of a combination key....929
3.2.5 Generating the encryption key 930
3.2.6 Point-to-multipoint configuration....931
3.2.7 Modifying the link keys 931
3.2.8 Generating a master key 932
4 Encryption....934
4.1 Encryption Key Size Negotiation....935
4.2 Encryption of Broadcast Messages....935
4.3 Encryption Concept....936
4.4 Encryption Algorithm 937
4.4.1 The operation of the cipher 939
4.5 LFSR Initialization 940
4.6 Key Stream Sequence 943
5 Authentication 944
5.1 Repeated Attempts 946
6 The Authentication And Key-Generating Functions....947
6.1 The Authentication Function E1 947
6.2 The Functions Ar and A'r....949
6.2.1 The round computations....949
6.2.2 The substitution boxes "e" and "l"....949
6.2.3 Key scheduling 950
6.3 E2-Key Generation Function for Authentication....951
6.4 E3-Key Generation Function for Encryption....953
7 Secure Simple Pairing 954
7.1 Phase 1: Public Key Exchange....955
7.2 Phase 2: Authentication Stage 1 956
7.2.1 Authentication Stage 1: Numeric Comparison Protocol 956
7.2.2 Authentication Stage 1: Out of Band Protocol 958
7.2.3 Authentication Stage 1: Passkey Entry Protocol 960
7.3 Phase 3: Authentication Stage 2 962

7.4 Phase 4: Link Key Calculation 963
7.5 Phase 5: LMP Authentication and Encryption 963
7.6 Elliptic Curve Definition 963
7.7 Cryptographic Function Definitions 964
7.7.1 The Simple Pairing Commitment Function f1 964
7.7.2 The Simple Pairing Numeric Verification Function g 965
7.7.3 The Simple Pairing Key Derivation Function f2 966
7.7.4 The Simple Pairing Check Function f3 967
7.7.5 The Simple Pairing AMP Key Derivation Function h2 968

8 AMP Security 970
8.1 Creation of the Initial Generic AMP Link Key 970
8.2 Creation of Dedicated AMP Link Keys 970
8.3 Debug Considerations 971

9 List of Figures 973

10 List of Tables 974

Core System Package [Controller volume]
Part A

RADIO SPECIFICATION

CONTENTS

1 Scope 31

2 Frequency Bands and Channel Arrangement 33

3 Transmitter Characteristics 34

3.1 Basic Rate 35

3.1.1 Modulation Characteristics 35

3.1.2 Spurious Emissions 36

3.1.3 Radio Frequency Tolerance 37

3.2 Enhanced Data Rate 37

3.2.1 Modulation Characteristics 38

3.2.2 Spurious Emissions 41

3.2.3 Radio Frequency Tolerance 42

3.2.4 Relative Transmit Power 43

4 Receiver Characteristics 44

4.1 Basic Rate 44

4.1.1 Actual Sensitivity Level 44

4.1.2 Interference Performance 44

4.1.3 Out-of-Band Blocking 45

4.1.4 Intermodulation Characteristics 45

4.1.5 Maximum Usable Level 46

4.1.6 Receiver Signal Strength Indicator 46

4.1.7 Reference Signal Definition 46

4.2 Enhanced Data Rate 46

4.2.1 Actual Sensitivity Level 46

4.2.2 BER Floor Performance 46

4.2.3 Interference Performance 46

4.2.4 Maximum Usable Level 47

4.2.5 Out-of-Band and Intermodulation Characteristics 48

4.2.6 Reference Signal Definition 48

5 Appendix A 49

5.1 Nominal Test Conditions 49

5.1.1 Nominal temperature 49

5.1.2 Nominal power source 49

5.2 Extreme Test Conditions 50

5.2.1 Extreme temperatures 50

5.2.2 Extreme power source voltages 50

6 Appendix B 51

7 Appendix C 52

7.1 Enhanced Data Rate Modulation Accuracy 52

1 SCOPE

Bluetooth devices operate in the unlicensed 2.4 GHz ISM (Industrial Scientific Medical) band. A frequency hop transceiver is applied to combat interference and fading.

Two modulation modes are defined. A mandatory mode, called Basic Rate, uses a shaped, binary FM modulation to minimize transceiver complexity. An optional mode, called Enhanced Data Rate, uses PSK modulation and has two variants: π/4-DQPSK and 8DPSK. The symbol rate for all modulation modes is 1 Ms/s. The gross air data rate is 1 Mbps for Basic Rate, 2 Mbps for Enhanced Data Rate using π/4-DQPSK and 3 Mbps for Enhanced Data Rate using 8DPSK.

For full duplex transmission, a Time Division Duplex (TDD) scheme is used in both modes. This specification defines the requirements for a Bluetooth radio for the Basic Rate and Enhanced Data Rate modes.

Requirements are defined for two reasons:

- Provide compatibility between radios used in the system
- Define the quality of the system

The Bluetooth radio shall fulfil the stated requirements under the operating conditions specified in Appendix A and Appendix B. The radio parameters shall be measured according to the methods described in the RF Test Specification.

This specification is based on the established regulations for Europe, Japan and North America. The standard documents listed below are only for information, and are subject to change or revision at any time.

Europe:

Approval Standards: European Telecommunications Standards Institute, ETSI
Documents: EN 300 328, ETS 300-826
Approval Authority: National Type Approval Authorities

Japan:

Approval Standards: Association of Radio Industries and Businesses, ARIB
Documents: ARIB STD-T66
Approval Authority: Ministry of Post and Telecommunications, MPT.

North America:

Approval Standards: Federal Communications Commission, FCC, USA
Documents: CFR47, Part 15, Sections 15.205, 15.209, 15.247 and 15.249

Approval Standards: Industry Canada, IC, Canada
Documents: RSS-139 and RSS-210

Approval Authority: FCC (USA), Industry Canada (Canada)

2 FREQUENCY BANDS AND CHANNEL ARRANGEMENT

The Bluetooth system operates in the 2.4 GHz ISM band. This frequency band is 2400 - 2483.5 MHz.

Regulatory Range	RF Channels
2.400-2.4835 GHz	f=2402+k MHz, k=0,…,78

Table 2.1: Operating frequency bands

RF channels are spaced 1 MHz and are ordered in channel number k as shown in Table 2.1. In order to comply with out-of-band regulations in each country, a guard band is used at the lower and upper band edge.

Lower Guard Band	Upper Guard Band
2 MHz	3.5 MHz

Table 2.2: Guard Bands

3 TRANSMITTER CHARACTERISTICS

The requirements stated in this section are given as power levels at the antenna connector of the Bluetooth device. If the device does not have a connector, a reference antenna with 0 dBi gain is assumed.

Due to difficulty in measurement accuracy in radiated measurements, systems with an integral antenna should provide a temporary antenna connector during type approval.

If transmitting antennas of directional gain greater than 0 dBi are used, the power level delivered to the antenna shall be compensated to comply with the applicable paragraphs in EN 300 328, EN 301 489-17and FCC part 15.

Bluetooth devices are classified into three power classes based on the modulation mode with the highest output power. That modulation mode shall meet the specification requirements for the power class. The other modulation modes do not need to meet the power class requirements of the applicable device power class , but the maximum output power used for the other modulation modes shall not exceed the maximum power of the modulation mode used for classification.

Power Class	Maximum Output Power (Pmax)	Nominal Output Power	Minimum Output Power[1]	Power Control
1	100 mW (20 dBm)	N/A	1 mW (0 dBm)	Pmin<+4 dBm to Pmax Optional: Pmin[2] to Pmax
2	2.5 mW (4 dBm)	1 mW (0 dBm)	0.25 mW (-6 dBm)	Optional: Pmin[2] to Pmax
3	1 mW (0 dBm)	N/A	N/A	Optional: Pmin[2] to Pmax

Table 3.1: Power classes

1. Minimum output power at maximum power setting.
2. The lower power limit Pmin<-30dBm is suggested but is not mandatory, and may be chosen according to application needs.

A power class 1 device shall support received power control requests. Power control may be used to limit the transmitted power of a remote device to no more than +4 dBm to prevent saturation of the receiver of the local device. Support of received power control requests is optional for class 2 and class 3 devices but may be used to optimize the power consumption and reduce the overall interference level for all devices that use the same spectrum that Bluetooth devices use. The power steps shall form a monotonic sequence, with a maximum step size of 8 dB and a minimum step size of 2 dB.

A class 1 device shall support handling of power control requests and shall be able to adjust its transmit power down to 4 dBm or less. A device that supports changing its transmit power controls the output power in a physical link in response to LMP commands received from a peer device that is capable of sending such requests (see Link Manager Protocol Specification).

In a connection, the output power shall not exceed the maximum output power of power class 2 for transmitting packets if the receiving device does not support the necessary messaging for sending the power control messages, see Link Manager Protocol Section 4.1.3 on page 227. In this case, the transmitting device shall comply with the rules of a class 2 or class 3 device.

If a class 1 device is paging or inquiring very close to another device, the input power can be larger than the requirement in Section 4.1.5 on page 46. This can cause the receiving device to fail to respond. It may therefore be useful to page at class 2 or 3 power in addition to paging at power class 1.

The transmit power level difference between the packet headers of all supported packet types at any given power step shall not exceed 10dB.

When communicating with a device that does not support enhanced power control, an enhanced power control device shall have an equal number of steps for each supported modulation scheme so that all supported modulation modes shall reach their respective maximum (or minimum) levels at the same time. The power levels may vary per modulation mode.

Devices shall not exceed the maximum allowed transmit power levels set by the regulatory bodies that have jurisdiction over the locales in which the device is to be sold or intended to operate. Implementers should be aware that the maximum transmit power level permitted under a given set of regulations might not be the same for all modulation modes.

3.1 BASIC RATE

3.1.1 Modulation Characteristics

The Modulation is GFSK (Gaussian Frequency Shift Keying) with a bandwidth-bit period product BT=0.5. The Modulation index shall be between 0.28 and 0.35. A binary one shall be represented by a positive frequency deviation, and a binary zero shall be represented by a negative frequency deviation. The symbol timing shall be less than ±20 ppm.

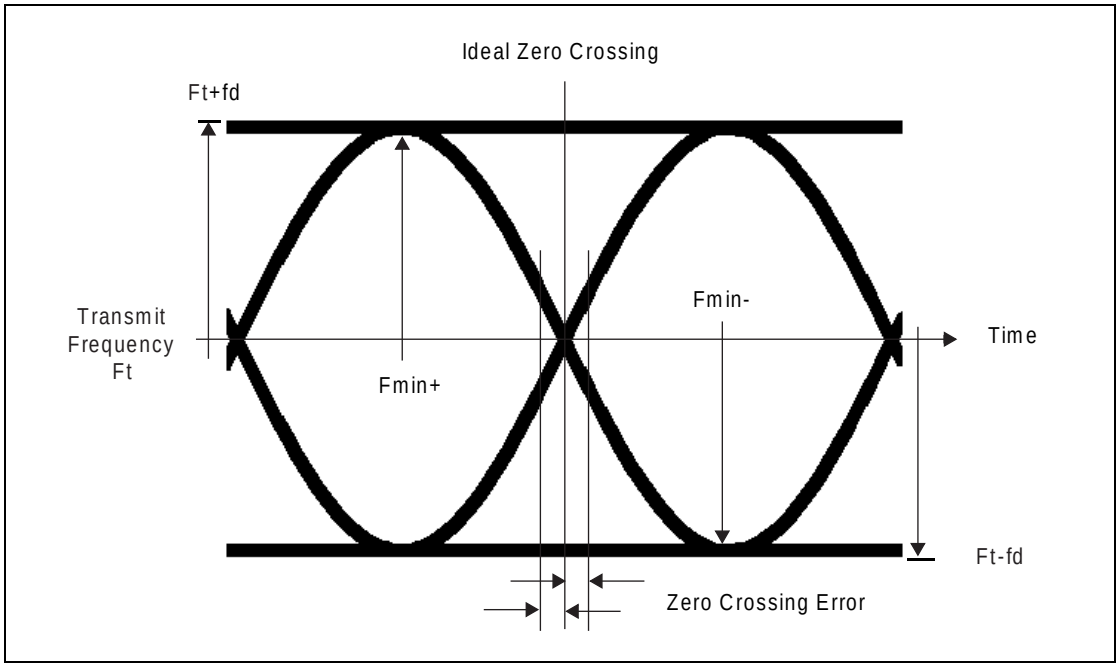

Figure 3.1: GFSK parameters definition.

For each transmission, the minimum frequency deviation, Fmin = min{|Fmin+|, Fmin-}, which corresponds to 1010 sequence shall be no smaller than ±80% of the frequency deviation (fd) with respect to the transmit frequency Ft, which corresponds to a 00001111 sequence.

In addition, the minimum frequency deviation shall never be smaller than 115 kHz. The data transmitted has a symbol rate of 1 Ms/s.

The zero crossing error is the time difference between the ideal symbol period and the measured crossing time. This shall be less than ± 1/8 of a symbol period.

3.1.2 Spurious Emissions

In-band spurious emissions shall be measured with a frequency hopping radio transmitting on one RF channel and receiving on a second RF channel; this means that the synthesizer may change RF channels between reception and transmission, but always returns to the same transmit RF channel. The equipment manufacturer is responsible for compliance in the intended country of use.

3.1.2.1 In-band spurious emission

Within the ISM band the transmitter shall pass a spectrum mask, given in Table 3.2. The spectrum shall comply with the 20 dB bandwidth definition in FCC part 15.247 and shall be measured accordingly. In addition to the FCC requirement an adjacent channel power on adjacent channels with a difference

in RF channel number of two or greater is defined. This adjacent channel power is defined as the sum of the measured power in a 1 MHz RF channel. The transmitted power shall be measured in a 100 kHz bandwidth using maximum hold. The device shall transmit on RF channel M and the adjacent channel power shall be measured on RF channel number N. The transmitter shall transmit a pseudo random data pattern in the payload throughout the test.

Frequency offset	Transmit Power
± 500 kHz	-20 dBc
2MHz (|M-N| = 2)	-20 dBm
3MHz or greater (|M-N| ≥ 3)	-40 dBm

Table 3.2: Transmit Spectrum mask.

Note: If the output power is less than 0dBm then, wherever appropriate, the FCC's 20 dB relative requirement overrules the absolute adjacent channel power requirement stated in the above table.

Exceptions are allowed in up to three bands of 1 MHz width centered on a frequency which is an integer multiple of 1 MHz. They shall comply with an absolute value of –20 dBm.

3.1.3 Radio Frequency Tolerance

The transmitted initial center frequency shall be within ±75 kHz from F_c. The initial frequency accuracy is defined as being the frequency accuracy before any packet information is transmitted. Note that the frequency drift requirement is not included in the ±75 kHz.

The limits on the transmitter center frequency drift within a packet are specified in Table 3.3. The different packets are defined in the Baseband Specification.

Duration of Packet	Frequency Drift
Max length one slot packet	±25 kHz
Max length three slot packet	±40 kHz
Max length five slot packet	±40 kHz
Maximum drift rate[1]	400 Hz/µs

Table 3.3: Maximum allowable frequency drifts in a packet.

1. The maximum drift rate is allowed anywhere in a packet.

3.2 ENHANCED DATA RATE

A key characteristic of the Enhanced Data Rate mode is that the modulation mode is changed within the packet. The access code and packet header, as defined in Table 6.1 in the Baseband Specification, are transmitted with the

Basic Rate 1 Mbps GFSK modulation mode, whereas the subsequent synchronization sequence, payload, and trailer sequence are transmitted using the Enhanced Data Rate PSK modulation mode.

3.2.1 Modulation Characteristics

During access code and packet header transmission the Basic Rate GFSK modulation mode shall be used. During the transmission of the synchronization sequence, payload, and trailer sequence a PSK type of modulation with a data rate of 2 Mbps or optionally 3 Mbps shall be used. The following subsections specify the PSK modulation for this transmission.

3.2.1.1 Modulation Method Overview

The PSK modulation format defined for the 2 Mbps transmission shall be $\pi/4$ rotated differential encoded quaternary phase shift keying ($\pi/4$-DQPSK).

The PSK modulation format defined for the 3 Mbps transmission shall be differential encoded 8-ary phase shift keying (8DPSK).

The modulation shall employ square-root raised cosine pulse shaping to generate the equivalent lowpass information-bearing signal v(t). The output of the transmitter shall be a bandpass signal that can be represented as

$$S(t) = Re\left[v(t)e^{j2\pi F_c t}\right] \qquad \textit{(EQ 1)}$$

with F_c denoting the carrier frequency.

3.2.1.2 Differential Phase Encoding

For the M-ary modulation, the binary data stream $\{b_n\}$, n=1,2,3, …N, shall be mapped onto a corresponding sequence {Sk}, k=1,2, …$N/\log_2(M)$ of complex valued signal points. M=4 applies for 2 Mbps and M=8 applies for 3 Mbps. Gray coding shall be applied as shown in Table 3.4 and Table 3.5. In the event that the length of the binary data stream N is not an integer multiple of log2(M), the last symbol of the sequence $\{S_k\}$ shall be formed by appending data zeros to the appropriate length. The signal points S_k shall be defined by:

$$S_k = S_{k-1}e^{j\varphi_k} \qquad k = 1, 2, ..N/\log_2(M) \qquad \text{(EQ 2)}$$

$$S_0 = e^{j\phi} \qquad \text{with } \phi \in [0, 2\pi) \qquad \text{(EQ 3)}$$

The relationship between the binary input b_k and the phase ϕ_k shall be as defined in Table 3.4 for the 2 Mbps transmission and in Table 3.5 for the 3 Mbps transmission.

b_{2k-1}	b_{2k}	φ_k
0	0	$\pi/4$
0	1	$3\pi/4$
1	1	$-3\pi/4$
1	0	$-\pi/4$

Table 3.4: $\pi/4$-DQPSK mapping.

b_{3k-2}	b_{3k-1}	b_{3k}	φ_k
0	0	0	0
0	0	1	π/4
0	1	1	π/2
0	1	0	3π/4
1	1	0	π
1	1	1	-3π/4
1	0	1	-π/2
1	0	0	-π/4

Table 3.5: 8DPSK mapping.

3.2.1.3 Pulse Shaping

The lowpass equivalent information-bearing signal v(t) shall be generated according to

$$v(t) = \sum_k S_k p(t - kT) \qquad \text{(EQ 4)}$$

in which the symbol period T shall be 1μs.

The frequency spectrum P(f), which corresponds to the square-root raised cosine pulse p(t) of the pulse shaping filter is:

$$|P(f)| = \begin{cases} 1 & 0 \le |f| \le \frac{1-\beta}{2T} \\ \sqrt{\frac{1}{2}\left(1 - \sin\left(\frac{\pi(2|f|T - 1)}{2\beta}\right)\right)} & \frac{1-\beta}{2T} \le |f| \le \frac{1+\beta}{2T} \\ 0 & \text{elsewhere} \end{cases} \qquad \text{(EQ 5)}$$

The roll off factor β shall be 0.4.

3.2.1.4 Modulation Accuracy

The measurement of modulation accuracy utilizes differential error vector magnitude (DEVM) with tracking of the carrier frequency drift. The definition of DEVM and the derivation of the RMS and peak measures of DEVM are given in Appendix C.

The DEVM shall be measured over the synchronization sequence and payload portions of the packet, but not the trailer symbols. For each modulation method and each measurement carrier frequency, DEVM measurement is made over a total of 200 non-overlapping blocks, where each block contains 50 symbols.

The transmitted packets shall be the longest supported packet type for each modulation method, as defined in Table 6.9 and Table 6.10 in the Baseband part.

The DEVM is measured using a square-root raised cosine filter, with a roll-off of 0.4 and a 3 dB bandwidth of ±500 kHz.

3.2.1.4.1 RMS DEVM

The RMS DEVM for any of the measured blocks shall not exceed 0.20 for π/4-DQPSK and 0.13 for 8DPSK.

3.2.1.4.2 99% DEVM

The 99% DEVM (defined as the DEVM value for which 99% of measured symbols have a lower DEVM) shall not exceed 0.30 for π/4-DQPSK and 0.20 for 8DPSK.

3.2.1.4.3 Peak DEVM

The Peak DEVM shall not exceed 0.35 for π/4-DQPSK and 0.25 for 8DPSK.

3.2.2 Spurious Emissions

In-band spurious emissions shall be measured with a frequency hopping radio transmitting on one RF channel and receiving on a second RF channel; this means that the synthesizer may change RF channels between reception and transmission, but always returns to the same transmit RF channel. The equipment manufacturer is responsible for compliance in the intended country of use.

3.2.2.1 In-band Spurious Emission

Within the ISM band the power spectral density of the transmitter shall comply with the following requirements when sending pseudo random data. All power measurements shall use a 100 kHz bandwidth with maximum hold. The power measurements between 1 MHz and 1.5 MHz from the carrier shall be at least 26 dB below the maximum power measurement up to 500 kHz from the carrier. The adjacent channel power for channels at least 2 MHz from the carrier is defined as the sum of the power measurements over a 1 MHz channel and shall not exceed -20 dBm for the second adjacent channels and -40 dBm for the third and subsequent adjacent channels. These requirements shall apply to the transmitted signal from the start of the guard time to the end of the power down ramp. The spectral mask is illustrated in Figure 3.2.

Exceptions are allowed in up to 3 bands of 1 MHz width centered on a frequency which is an integer multiple of 1 MHz. They shall comply with an absolute value of –20 dBm.

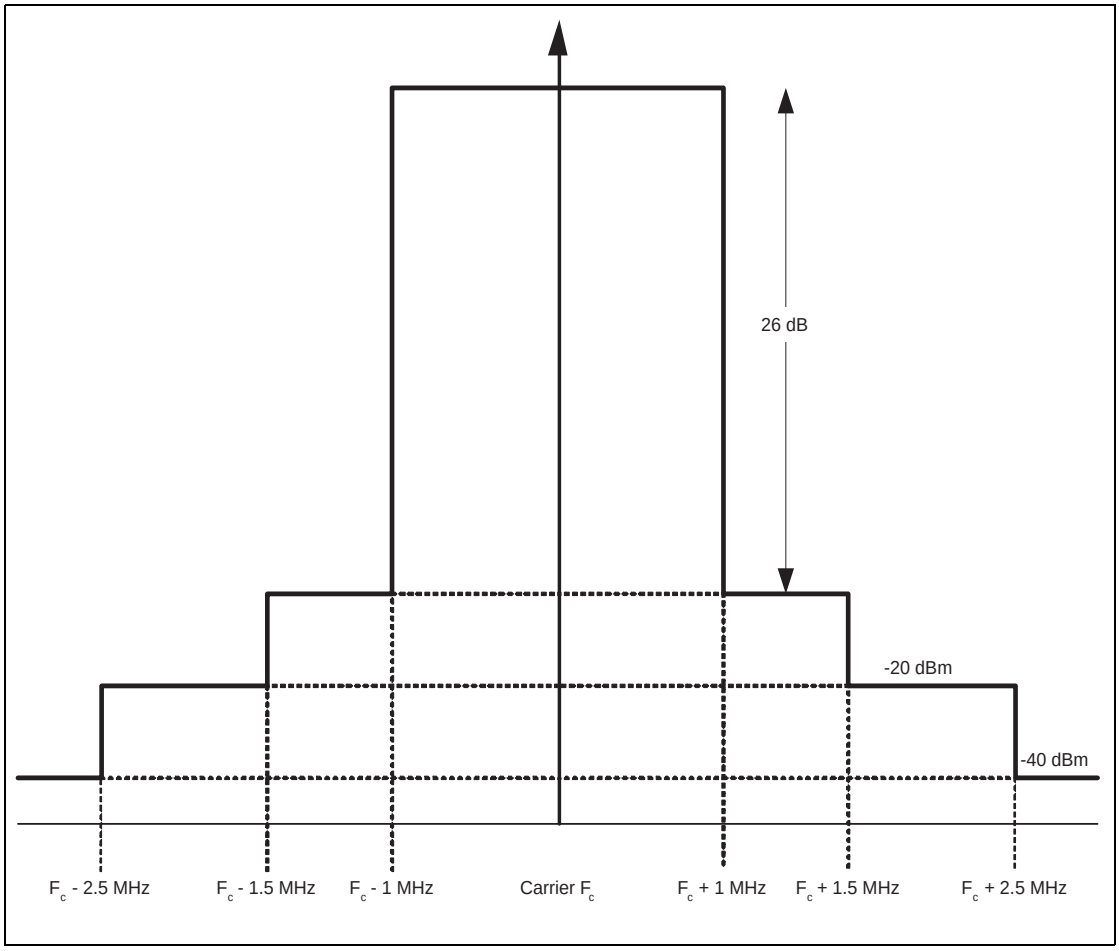

Figure 3.2: Transmitter spectrum mask

3.2.3 Radio Frequency Tolerance

The same carrier frequencies F_c as used for Basic Rate transmissions shall be used for the Enhanced Data Rate transmissions. The transmitted initial center frequency accuracy shall be within ±75 kHz from F_c. The maximum excursion from F_c (frequency offset plus drift) shall not exceed ±75 kHz.

The initial frequency accuracy is defined as being the frequency accuracy before any information is transmitted.

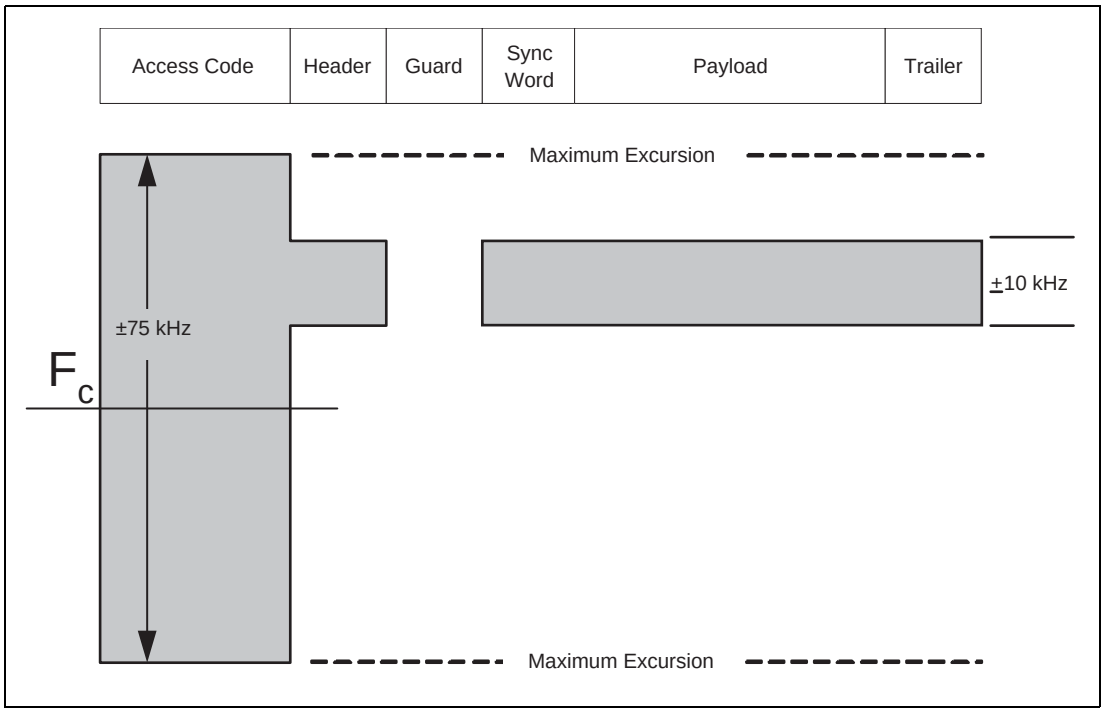

Figure 3.3: Carrier frequency mask

The requirements on accuracy and stability are illustrated by Figure 3.3 for the Enhanced Data Rate packet format defined in Baseband Specification. The higher frequency accuracy requirement shall start at the first symbol of the header. The maximum drift over the header, synchronization sequence and payload shall be ±10 kHz.

3.2.4 Relative Transmit Power

The requirement on the relative power of the GFSK and DPSK portions of the Enhanced Data Rate packet is defined as follows. The average power level during the transmission of access code and header is denoted as P_{GFSK} and the average power level during the transmission of the synchronization sequence and the payload is denoted as P_{DPSK}.The following inequalities shall be satisfied independently for each Enhanced Data Rate packet transmitted:

$(P_{GFSK} - 4\ dB) < P_{DPSK} < (P_{GFSK} + 1\ dB)$

4 RECEIVER CHARACTERISTICS

The receiver characteristics shall be measured using loopback as defined in Section 1, “Test Methodology,” on page 335.

The reference sensitivity level referred to in this chapter is -70 dBm.

4.1 BASIC RATE

4.1.1 Actual Sensitivity Level

The actual sensitivity level is defined as the input level for which a raw bit error rate (BER) of 0.1% is met. The receiver sensitivity shall be below or equal to –70 dBm with any Bluetooth transmitter compliant to the transmitter specification specified in Section 3 on page 34.

4.1.2 Interference Performance

The interference performance on Co-channel and adjacent 1 MHz and 2 MHz shall be measured with the wanted signal 10 dB over the reference sensitivity level. For interference performance on all other RF channels the wanted signal shall be 3 dB over the reference sensitivity level. If the frequency of an interfering signal is outside of the band 2400-2483.5 MHz, the out-of-band blocking specification (see Section 4.1.3 on page 45) shall apply. The interfering signal shall be Bluetooth-modulated (see Section 4.1.7 on page 46). The BER shall be ≤0.1% for all the signal-to-interference ratios listed in Table 4.1:

Frequency of Interference	Ratio
Co-Channel interference, $C/I_{co\text{-}channel}$	11 dB
Adjacent (1 MHz) interference, C/I_{1MHz}	0 dB
Adjacent (2 MHz) interference, C/I_{2MHz}	-30 dB
Adjacent (≥3 MHz) interference, $C/I_{\geq 3MHz}$	-40 dB
Image frequency Interference[1] [2], C/I_{Image}	-9 dB
Adjacent (1 MHz) interference to in-band image frequency, $C/I_{Image\pm 1MHz}$	-20 dB

Table 4.1: Interference performance

1. In-band image frequency
2. If the image frequency ≠ n*1 MHz, then the image reference frequency is defined as the closest n*1 MHz frequency.

   If two adjacent channel specifications from Table 4.1 are applicable to the same channel, the more relaxed specification applies.

These specifications are only to be tested at nominal temperature conditions with a device receiving on one RF channel and transmitting on a second RF channel;

this means that the synthesizer may change RF channels between reception and transmission, but always returns to the same receive RF channel.

RF channels where the requirements are not met are called spurious response RF channels. Five spurious response RF channels are allowed at RF channels with a distance of ≥2 MHz from the wanted signal. On these spurious response RF channels a relaxed interference requirement C/I = -17 dB shall be met.

4.1.3 Out-of-Band Blocking

The out-of-band suppression (or rejection) shall be measured with the wanted signal 3 dB over the reference sensitivity level. The interfering signal shall be a continuous wave signal. The BER shall be ≤ 0.1%. The out-of-band blocking shall fulfil the following requirements:

Interfering Signal Frequency	Interfering Signal Power Level
30 MHz - 2000 MHz	-10 dBm
2000 - 2399 MHz	-27 dBm
2484 – 3000 MHz	-27 dBm
3000 MHz – 12.75 GHz	-10 dBm

Table 4.2: Out-of-band suppression (or rejection) requirements.

24 exceptions are permitted which are dependent upon the given RF channel and are centered at a frequency which is an integer multiple of 1 MHz. For at least 19 of these spurious response frequencies, a reduced interference level of at least -50dBm is allowed in order to achieve the required BER=0.1% performance, whereas for a maximum of 5 of the spurious frequencies the interference level may be assumed arbitrarily lower.

4.1.4 Intermodulation Characteristics

The reference sensitivity performance, BER = 0.1%, shall be met under the following conditions:

- The wanted signal shall be at frequency f_0 with a power level 6 dB over the reference sensitivity level.
- A static sine wave signal shall be at a frequency f_1 with a power level of –39 dBm.
- A Bluetooth modulated signal (see Section 4.1.7 on page 46) shall be at f_2 with a power level of -39 dBm.

Frequencies f0, f1 and f2 shall be chosen such that $f_0=2f_1-f_2$ and $|f_2-f_1|=n*1$ MHz, where n can be 3, 4, or 5. The system shall fulfill at least one of the three alternatives (n=3, 4, or 5).

4.1.5 Maximum Usable Level

The maximum usable input level that the receiver operates at shall be greater than -20 dBm. The BER shall be less than or equal to 0.1% at –20 dBm input power.

4.1.6 Receiver Signal Strength Indicator

If a device supports Receive Signal Strength Indicator (RSSI) the accuracy shall be +/- 6 dBm.

4.1.7 Reference Signal Definition

A Bluetooth modulated interfering signal shall be defined as:

Modulation = GFSK

Modulation index = 0.32±1%

BT= 0.5±1%

Bit Rate = 1 Mbps ±1 ppm

Modulating Data for wanted signal = PRBS9

Modulating Data for interfering signal = PRBS 15

Frequency accuracy better than ±1 ppm.

4.2 ENHANCED DATA RATE

4.2.1 Actual Sensitivity Level

The actual sensitivity level shall be defined as the input level for which a raw bit error rate (BER) of 0.01% is met. The requirement for a Bluetooth π/4-DQPSK and 8DPSK Enhanced Data Rate receiver shall be an actual sensitivity level of –70 dBm or better. The receiver shall achieve the –70 dBm sensitivity level with any Bluetooth transmitter compliant to the Enhanced Data Rate transmitter specification as defined in Section 3.2.

4.2.2 BER Floor Performance

The receiver shall achieve a BER less than 0.001% at 10 dB above the reference sensitivity level.

4.2.3 Interference Performance

The interference performance for co-channel and adjacent 1 MHz and 2 MHz channels shall be measured with the wanted signal 10 dB above the reference sensitivity level. On all other frequencies the wanted signal shall be 3 dB above the reference sensitivity level. The requirements in this section shall only apply if the frequency of the interferer is inside of the band 2400-2483.5 MHz.

The interfering signal for co-channel interference shall be similarly modulated as the desired signal. The interfering signal for other channels shall be equivalent to a nominal Bluetooth Basic Rate GFSK transmitter. The interfering signal shall carry random data.

A BER of 0.1% or better shall be achieved for the signal to interference ratios defined in Table 4.3.

Frequency of Interference	**π/4-DQPSK Ratio**	**8DPSK Ratio**
Co-Channel interference, $C/I_{co\text{-}channel}$	13 dB	21 dB
Adjacent (1 MHz) interference[1], C/I_{1MHz}	0 dB	5 dB
Adjacent (2MHz) interference[1], C/I_{2MHz}	-30 dB	-25 dB
Adjacent (≥3MHz) interference[1]	-40 dB	-33 dB
Image frequency interference[1,2,3], C/I_{Image}	-7 dB	0 dB
Adjacent (1 MHz) interference to in-band image frequency[1,2,3], $C/I_{Image \pm 1MHz}$	-20 dB	-13 dB

Table 4.3: Interference Performance

1. If two adjacent channel specifications from Table 4.3 are applicable to the same channel, the more relaxed specification applies.
2. In-band image frequency.
3. If the image frequency is not equal to n*1 MHz, then the image reference frequency is defined as the closest n*1 MHz frequency.

These specifications are only to be tested at nominal temperature conditions with a receiver hopping on one frequency; this means that the synthesizer may change frequency between receive slot and transmit slot, but always returns to the same receive frequency.

Frequencies where the requirements are not met are called spurious response frequencies. Five spurious response frequencies are allowed at frequencies with a distance of ≥2 MHz from the wanted signal. On these spurious response frequencies a relaxed interference requirement C/I = -15 dB for π/4-DQPSK and C/I = -10 dB for 8DPSK shall be met.

4.2.4 Maximum Usable Level

The maximum usable input level that the receiver operates at shall be greater than -20 dBm. The BER shall be less than or equal to 0.1% at -20 dBm input power.

4.2.5 Out-of-Band and Intermodulation Characteristics

Note: The Basic Rate out-of-band blocking and intermodulation requirements ensure adequate Enhanced Data Rate performance, and therefore there are no specific requirements for Enhanced Data Rate.

4.2.6 Reference Signal Definition

A 2 Mbps Bluetooth signal used as "wanted" or "interfering signal" is defined as:

Modulation = π/4-DQPSK
Symbol Rate = 1 Msym/s ± 1 ppm
Frequency accuracy better than ±1 ppm
Modulating Data for wanted signal = PRBS9
Modulating Data for interfering signal = PRBS15
RMS Differential Error Vector Magnitude < 5%
Average power over the GFSK and DPSK portions of the packet shall be equal to within +/- 1 dB

A 3 Mbps Bluetooth signal used as "wanted" or "interfering signal" is defined as:

Modulation = 8DPSK
Symbol Rate = 1 Msym/s ± 1 ppm
Frequency accuracy better than ±1 ppm
Modulating Data for wanted signal = PRBS9
Modulating Data for interfering signal = PRBS15
RMS Differential Error Vector Magnitude < 5%
Average power over the GFSK and DPSK portions of the packet shall be equal to within +/- 1 dB

5 APPENDIX A

5.1 NOMINAL TEST CONDITIONS

5.1.1 Nominal temperature

The nominal temperature conditions for tests shall be +15 to +35 ^{o}C. When it is impractical to carry out the test under this condition a note to this effect, stating the ambient temperature, shall be recorded. The actual value during the test shall be recorded in the test report.

5.1.2 Nominal power source

5.1.2.1 Mains voltage

The nominal test voltage for equipment to be connected to the mains shall be the nominal mains voltage. The nominal voltage shall be the declared voltage or any of the declared voltages for which the equipment was designed. The frequency of the test power source corresponding to the AC mains shall be within 2% of the nominal frequency.

5.1.2.2 Lead-acid battery power sources used in vehicles

When radio equipment is intended for operation from the alternator-fed lead-acid battery power sources which are standard in vehicles, then the nominal test voltage shall be 1.1 times the nominal voltage of the battery (6V, 12V, etc.).

5.1.2.3 Other power sources

For operation from other power sources or types of battery (primary or secondary), the nominal test voltage shall be as declared by the equipment manufacturer. This shall be recorded in the test report.

5.2 EXTREME TEST CONDITIONS

5.2.1 Extreme temperatures

The extreme temperature range shall be the largest temperature range given by the combination of:

- The minimum temperature range 0 °C to +35 °C
- The product operating temperature range declared by the manufacturer.

This extreme temperature range and the declared operating temperature range shall be recorded in the test report.

5.2.2 Extreme power source voltages

Tests at extreme power source voltages specified below are not required when the equipment under test is designed for operation as part of and powered by another system or piece of equipment. Where this is the case, the limit values of the host system or host equipment shall apply. The appropriate limit values shall be declared by the manufacturer and recorded in the test report.

5.2.2.1 Mains voltage

The extreme test voltage for equipment to be connected to an AC mains source shall be the nominal mains voltage ±10%.

5.2.2.2 Lead-acid battery power source used on vehicles

When radio equipment is intended for operation from the alternator-fed lead-acid battery power sources which are standard in vehicles, then extreme test voltage shall be 1.3 and 0.9 times the nominal voltage of the battery (6V, 12V etc.)

5.2.2.3 Power sources using other types of batteries

The lower extreme test voltage for equipment with power sources using the following types of battery, shall be

a) for Leclanché, alkaline, or lithium type battery: 0.85 times the nominal voltage of the battery

b) for mercury or nickel-cadmium types of battery: 0.9 times the nominal voltage of the battery.

In both cases, the upper extreme test voltage shall be 1.15 times the nominal voltage of the battery.

5.2.2.4 Other power sources

For equipment using other power sources, or capable of being operated from a variety of power sources (primary or secondary), the extreme test voltages shall be those declared by the manufacturer. These shall be recorded in the test report.

6 APPENDIX B

The Basic Rate radio parameters shall be tested in the following conditions

Parameter	Temperature	Power source
Output Power	ETC	ETC
Power control	NTC	NTC
Modulation index	ETC	ETC
Initial Carrier Frequency accuracy	ETC	ETC
Carrier Frequency drift	ETC	ETC
Conducted in-band spurious emissions	ETC	ETC
Radiated in-band emissions	NTC	NTC
Sensitivity	ETC	ETC
Interference Performance	NTC	NTC
Intermodulation Characteristics	NTC	NTC
Out-of-band blocking	NTC	NTC
Maximum Usable Level	NTC	NTC
Receiver Signal Strength Indicator	NTC	NTC

ETC = Extreme Test Conditions
NTC = Nominal Test Conditions

The Enhanced Data Rate radio parameters shall be tested in the following conditions

Parameter	Temperature	Power source
Modulation accuracy	ETC	ETC
Carrier frequency stability	ETC	ETC
In-band spurious emissions	ETC	ETC
Relative transmit power	ETC	ETC
Sensitivity	ETC	ETC
BER floor sensitivity	NTC	NTC
Interference Performance	NTC	NTC
Maximum usable level	NTC	NTC

ETC = Extreme Test Conditions
NTC = Nominal Test Conditions

7 APPENDIX C

7.1 ENHANCED DATA RATE MODULATION ACCURACY

The Enhanced Data Rate modulation accuracy is defined by the differential error vector, being the difference between the vectors representing consecutive symbols of the transmitted signal, after passing the signal through a specified measurement filter, sampling it at the symbol rate with an optimum sampling phase and compensating it for carrier frequency error and for the ideal carrier phase changes. The magnitude of the normalized differential error vector is called the Differential Error Vector Magnitude (DEVM). The objective of the DEVM is to estimate the modulation errors that would be perceived by a differential receiver.

In an ideal transmitter, the input bit sequence $\{b_j\}$ is mapped onto a complex valued symbol sequence $\{S_k\}$. Subsequently, this symbol sequence is transformed into a baseband signal S(t) by means of a pulse-shaping filter.

In an actual transmitter implementation, the bit sequence $\{b_j\}$ generates a baseband equivalent transmitted signal Y(t). This signal Y(t) contains, besides the desired component S(t), multiple distortion components. This is illustrated in Figure 7.1.

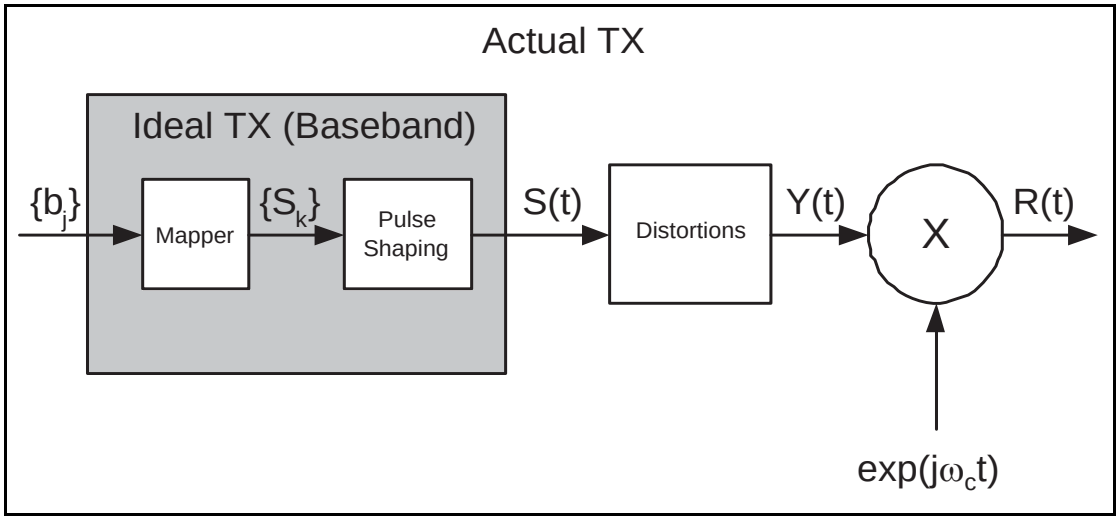

Figure 7.1: TX model.

Let Z(t) be the output of the measurement filter after first compensating the received signal for the initial center frequency error, ω_i, of the received packet, i.e. the output after down conversion and filtering the transmit signal R(t) (see Figure 7.2).The measurement filter is defined by a square-root raised cosine shaping filter with a roll-off factor equal to 0.4 and 3 dB bandwidth of ±500 kHz.

Let $\{Z_k(\varepsilon)\}$ be the sequence of samples obtained by sampling the signal Z(t) with a sampling period equal to the symbol period T and a sampling phase equal to ε such that $Z_k(\varepsilon)=Z((k+\varepsilon)T)$. Note that this sequence $\{Z_k(\varepsilon)\}$ would coincide with the symbol sequence $\{S_k\}$ if no distortion is present and the correct timing phase ε is chosen.

To reflect the behavior of a typical differential receiver, the sample sequence $\{Z_k(\varepsilon)\}$ should be compensated for carrier frequency drift. Therefore, the sequence $\{Z_k(\varepsilon)\}$ is multiplied by a factor W^{-k} in which $W = e^{j\omega T}$ accounts for the frequency offset ω. A constant value of ω is used for each DEVM block of N = 50 symbols, but ω may vary between DEVM blocks (note that the values of ω can be used to measure carrier frequency drift.

In addition, $\{Z_k(\varepsilon)\}$ is compensated for the ideal phase changes between symbols by multiplying it with the complex conjugate of the symbol sequence $\{S_k\}$. However, it is not necessary to compensate $\{Z_k(\varepsilon)\}$ for initial carrier phase or output power of the transmitter.

Let $\{Q_k(\varepsilon,\omega)\}$ denote the compensated sequence $\{Z_k(\varepsilon)\}$, where the ideal phase changes have been removed and ε and ω are chosen optimally to minimize the DEVM, (i.e. remove time and frequency uncertainty). For a transmitter with no distortions other than a constant frequency error, $\{Q_k(\varepsilon,\omega)\}$ is a complex constant that depends on the initial carrier phase and the output power of the transmitter.

The differential error sequence $\{E_k(\varepsilon,\omega)\}$ is defined as the difference between $\{Q_k(\varepsilon,\omega)\}$ and $\{Q_{k-1}(\varepsilon,\omega)\}$. This reflects the modulation errors that would be perceived by a differential receiver. For a transmitter with no distortions other than a constant frequency error, $\{E_k(\varepsilon,\omega)\}$ is zero.

The definitions of the DEVM measures are based upon this differential error sequence $\{E_k(\varepsilon,\omega)\}$. The generation of the error sequence is depicted in Figure 7.2.

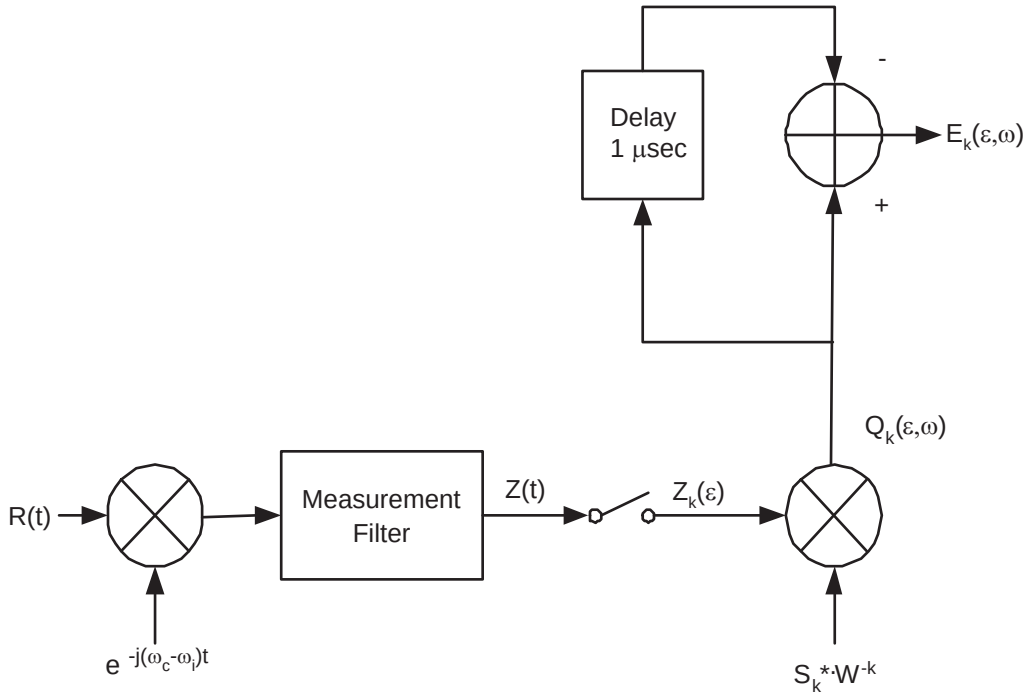

Figure 7.2: Error sequence generation.

RMS DEVM

The root mean squared DEVM (RMS DEVM) computed over N = 50 symbols is defined as:

$$RMS\ DEVM = \min_{\varepsilon,\omega} \left\{ \sqrt{\sum_{k=1}^{N} \left|E_k(\varepsilon,\omega)\right|^2 \Big/ \sum_{k=1}^{N} \left|Q_k(\varepsilon,\omega)\right|^2} \right\}$$

As can be seen from the expression above, the RMS DEVM is the square-root of the normalized power of the error.

Peak DEVM

The DEVM at symbol k is defined as

$$DEVM\,(k) = \sqrt{\frac{\left|E_k\,(\varepsilon_0, \omega_0)\right|^2}{\sum_{j=1}^{N}\left|Q_j\,(\varepsilon_0, \omega_0)\right|^2 / N}} \qquad \text{(EQ 6)}$$

where ε_0 and ω_0 are the values for ε and ω used to calculate the RMS DEVM.

The peak DEVM is defined as:

$$Peak\ DEVM = \max_{k}\{\mathrm{DEVM\ (k)}\} \qquad \text{(EQ 7)}$$

Core System Package [Controller volume]
Part B

BASEBAND SPECIFICATION

This document describes the specification of the Bluetooth link controller which carries out the baseband protocols and other low-level link routines.

CONTENTS

1 General Description 63
1.1 Bluetooth Clock 64
1.2 Bluetooth Device Addressing 66
1.2.1 Reserved Addresses 66
1.3 Access Codes 67
2 Physical Channels 68
2.1 Physical Channel Definition 69
2.2 Basic Piconet Physical Channel 69
2.2.1 Master-slave Definition 69
2.2.2 Hopping Characteristics 70
2.2.3 Time Slots 70
2.2.4 Piconet clocks 71
2.2.5 Transmit/receive Timing 71
2.3 Adapted Piconet Physical Channel 74
2.3.1 Hopping Characteristics 74
2.4 Page Scan Physical Channel 75
2.4.1 Clock Estimate for Paging 75
2.4.2 Hopping Characteristics 75
2.4.3 Paging Procedure Timing 76
2.4.4 Page Response Timing 77
2.5 Inquiry Scan Physical Channel 79
2.5.1 Clock for Inquiry 79
2.5.2 Hopping Characteristics 79
2.5.3 Inquiry Procedure Timing 79
2.5.4 Inquiry Response Timing 79
2.6 Hop Selection 81
2.6.1 General Selection Scheme 81
2.6.2 Selection Kernel 85
2.6.3 Adapted Hop Selection Kernel 88
2.6.4 Control Word 89
3 Physical Links 94
3.1 Link Supervision 94
4 Logical Transports 95
4.1 General 95
4.2 Logical Transport Address (LT_ADDR) 95
4.3 Synchronous Logical Transports 96
4.4 Asynchronous Logical Transport 96

4.5 Transmit/Receive Routines 97
4.5.1 TX Routine 97
4.5.2 RX Routine 100
4.5.3 Flow Control 101
4.6 Active Slave Broadcast Transport 102
4.7 Parked Slave Broadcast Transport 103
4.7.1 Parked Member Address (PM_ADDR) 103
4.7.2 Access Request Address (AR_ADDR) 103

5 Logical Links 104
5.1 Link Control Logical Link (LC) 104
5.2 ACL Control Logical Link (ACL-C) 104
5.3 User Asynchronous/Isochronous Logical Link (ACL-U) 104
5.3.1 Pausing the ACL-U logical link 105
5.4 User Synchronous Data Logical Link (SCO-S) 105
5.5 User Extended Synchronous Data Logical Link (eSCO-S) 105
5.6 Logical Link Priorities 105

6 Packets 106
6.1 General Format 106
6.1.1 Basic Rate 106
6.1.2 Enhanced Data Rate 106
6.2 Bit Ordering 107
6.3 Access Code 108
6.3.1 Access Code Types 108
6.3.2 Preamble 109
6.3.3 Sync Word 109
6.3.4 Trailer 112
6.4 Packet Header 113
6.4.1 LT_ADDR 113
6.4.2 TYPE 113
6.4.3 FLOW 114
6.4.4 ARQN 114
6.4.5 SEQN 114
6.4.6 HEC 114
6.5 Packet Types 115
6.5.1 Common Packet Types 116
6.5.2 SCO Packets 120
6.5.3 eSCO Packets 121
6.5.4 ACL Packets 123
6.6 Payload Format 125

6.6.1 Synchronous Data Field 125
6.6.2 Asynchronous Data Field 127
6.7 Packet Summary 130

7 Bitstream Processing 132
7.1 Error Checking 133
7.1.1 HEC Generation 133
7.1.2 CRC Generation 134
7.2 Data Whitening 136
7.3 Error Correction 137
7.4 FEC Code: Rate 1/3 137
7.5 FEC Code: Rate 2/3 138
7.6 ARQ Scheme 139
7.6.1 Unnumbered ARQ 139
7.6.2 Retransmit Filtering 142
7.6.3 Flushing Payloads 145
7.6.4 Multi-slave Considerations 145
7.6.5 Broadcast Packets 146
7.7 Erroneous Synchronous Data Reporting 147

8 Link Controller Operation 148
8.1 Overview of States 148
8.2 Standby State 149
8.3 Connection Establishment Substates 149
8.3.1 Page Scan Substate 149
8.3.2 Page substate 151
8.3.3 Page Response Substates 154
8.4 Device Discovery Substates 158
8.4.1 Inquiry scan substate 159
8.4.2 Inquiry Substate 160
8.4.3 Inquiry Response Substate 161
8.5 Connection State 163
8.6 Active Mode 164
8.6.1 Polling in the Active Mode 165
8.6.2 SCO 165
8.6.3 eSCO 167
8.6.4 Broadcast Scheme 169
8.6.5 Role Switch 170
8.6.6 Scatternet 172
8.6.7 Hop Sequence Switching 173
8.6.8 Channel Classification and Channel Map Selection 176

8.6.9 Power Management 177
8.7 Sniff Mode 178
8.7.1 Sniff Transition Mode 179
8.7.2 Sniff Subrating 180
8.8 Hold Mode 181
8.9 Park State 182
8.9.1 Beacon Train 182
8.9.2 Beacon Access Window 185
8.9.3 Parked Slave Synchronization 186
8.9.4 Parking 187
8.9.5 Master-initiated Unparking 188
8.9.6 Slave-initiated Unparking 188
8.9.7 Broadcast Scan Window 189
8.9.8 Polling in the Park State 189

9 Audio 190
9.1 LOG PCM CODEC 190
9.2 CVSD CODEC 190
9.3 Error Handling 193
9.4 General Audio Requirements 193
9.4.1 Signal Levels 193
9.4.2 CVSD Audio Quality 193

10 List of Figures 194

11 List of Tables 197
Appendix A: General Audio Recommendations 198
Appendix B: Timers 201
Appendix C: Recommendations for AFH Operation in Park, Hold, and Sniff 203

1 GENERAL DESCRIPTION

This part specifies the normal operation of a Bluetooth baseband.

The Bluetooth system provides a point-to-point connection or a point-to-multi-point connection, see (a) and (b) in Figure 1.1 on page 63. In a point-to-point connection the physical channel is shared between two Bluetooth devices. In a point-to-multipoint connection, the physical channel is shared among several Bluetooth devices. Two or more devices sharing the same physical channel form a *piconet*. One Bluetooth device acts as the master of the piconet, whereas the other device(s) act as slave(s). Up to seven slaves can be active in the piconet. Additionally, many more slaves can remain connected in a parked state. These parked slaves are not active on the channel, but remain synchronized to the master and can become active without using the connection establishment procedure. Both for active and parked slaves, the channel access is controlled by the master.

Piconets that have common devices are called a *scatternet,* see (c) in Figure 1.1 on page 63. Each piconet only has a single master, however, slaves can participate in different piconets on a time-division multiplex basis. In addition, a master in one piconet can be a slave in other piconets. Piconets shall not be frequency synchronized and each piconet has its own hopping sequence.

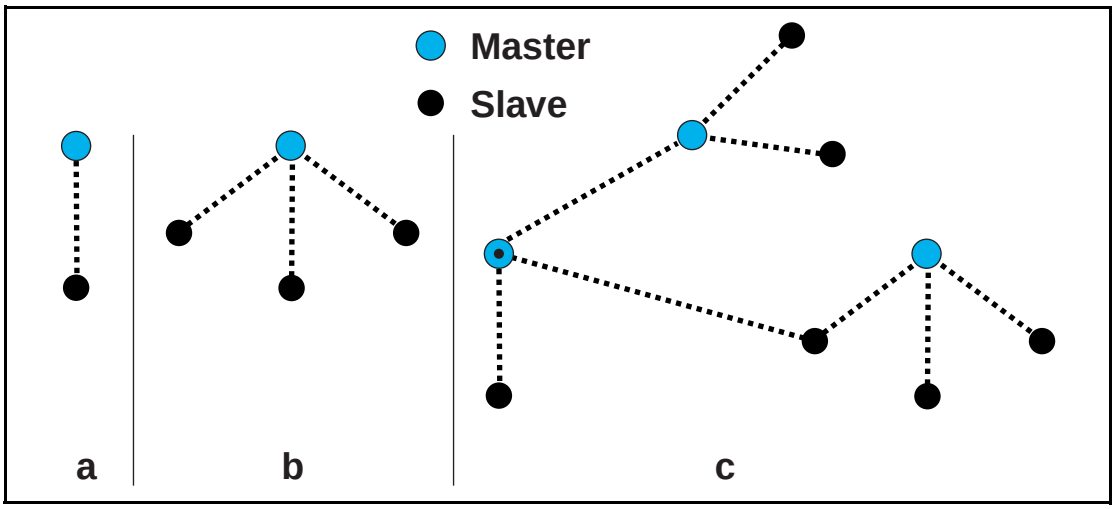

Figure 1.1: Piconets with a single slave operation (a), a multi-slave operation (b) and a scatternet operation (c).

Data is transmitted over the air in packets. Two modes are defined: a mandatory mode called Basic Rate and an optional mode called Enhanced Data Rate. The symbol rate for all modulation modes is 1 Ms/s. The gross air data rate is 1 Mbps for Basic Rate. Enhanced Data Rate has a primary modulation mode that provides a gross air data rate of 2 Mbps, and a secondary modulation mode that provides a gross air data rate of 3 Mbps.

The general Basic Rate packet format is shown in Figure 1.2. Each packet consists of 3 entities: the access code, the header, and the payload.

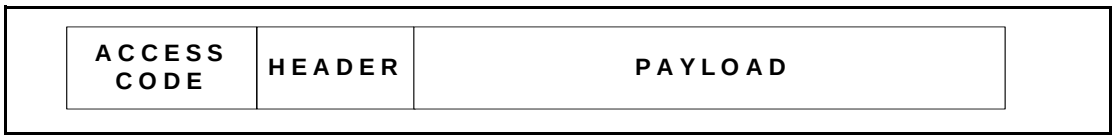

Figure 1.2: Standard Basic Rate packet format.

The general Enhanced Data Rate packet format is shown in Figure 1.3. Each packet consists of 6 entities: the access code, the header, the guard period, the synchronization sequence, the Enhanced Data Rate payload and the trailer. The access code and header use the same modulation mode as for Basic Rate packets while the synchronization sequence, the Enhanced Data Rate payload and the trailer use the Enhanced Data Rate modulation mode. The guard time allows for the transition between the modulation modes.

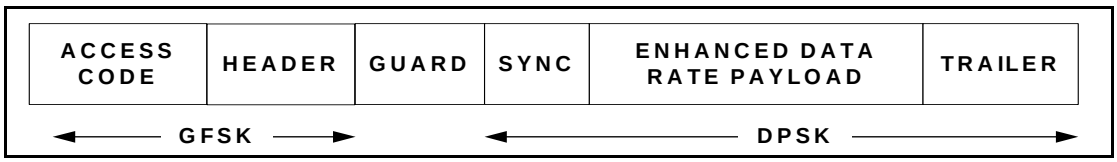

Figure 1.3: Standard Enhanced Data Rate packet format

1.1 BLUETOOTH CLOCK

Every Bluetooth device shall have a native clock that shall be derived from a free running system clock. For synchronization with other devices, offsets are used that, when added to the native clock, provide temporary Bluetooth clocks that are mutually synchronized. It should be noted that the Bluetooth clock has no relation to the time of day; it may therefore be initialized to any value. The clock has a cycle of about a day. If the clock is implemented with a counter, a 28-bit counter is required that shall wrap around at 2^{28}-1. The least significant bit (LSB) shall tick in units of 312.5 μs (i.e. half a time slot), giving a clock rate of 3.2 kHz.

The clock determines critical periods and triggers the events in the device. Four periods are important in the Bluetooth system: 312.5 μs, 625 μs, 1.25 ms, and 1.28 s; these periods correspond to the timer bits CLK_0, CLK_1, CLK_2, and CLK_{12}, respectively, see Figure 1.4 on page 64.

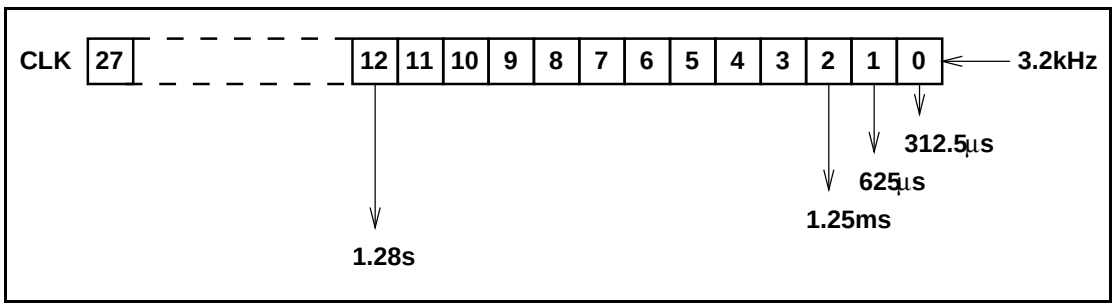

Figure 1.4: Bluetooth clock.

In the different modes and states a device can reside in, the clock has different appearances:

- CLKN native clock
- CLKE estimated clock
- CLK master clock

CLKN is the native clock and shall be the reference to all other clock appearances. In STANDBY and in Park, Hold, and Sniff modes the native clock may be driven by a low power oscillator (LPO) with worst case accuracy (+/-250ppm). Otherwise, the native clock shall be driven by the reference crystal oscillator with worst case accuracy of +/-20ppm.

See Section 2.2.4 on page 71 for the definition of CLK and Section 2.4.1 on page 75 for the definition of CLKE.

The master shall never adjust its native clock during the existence of the piconet.

1.2 BLUETOOTH DEVICE ADDRESSING

Each Bluetooth device shall be allocated a unique 48-bit Bluetooth device address (BD_ADDR). This address shall be obtained from the IEEE Registration Authority. The address is divided into the following three fields:

- LAP field: lower address part consisting of 24 bits
- UAP field: upper address part consisting of 8 bits
- NAP field: non-significant address part consisting of 16 bits

The LAP and UAP form the significant part of the BD_ADDR. The bit pattern in Figure 1.5 is an example BD_ADDR.

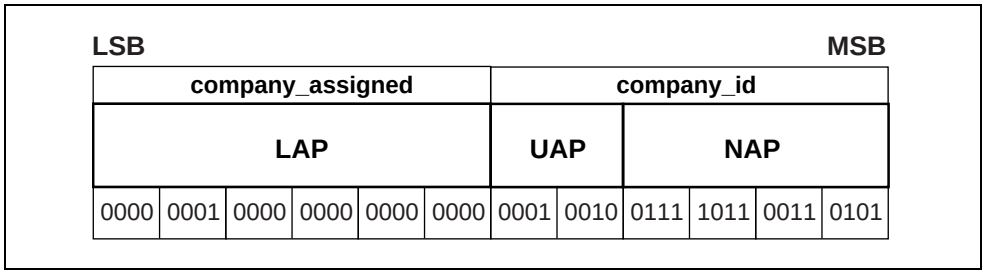

Figure 1.5: Format of BD_ADDR.

The BD_ADDR may take any values except the 64 reserved LAP values for general and dedicated inquiries (see Section 1.2.1 on page 66).

1.2.1 Reserved Addresses

A block of 64 contiguous LAPs is reserved for inquiry operations; one LAP common to all devices is reserved for general inquiry, the remaining 63 LAPs are reserved for dedicated inquiry of specific classes of devices (see Assigned Numbers). The same LAP values are used regardless of the contents of UAP and NAP. Consequently, none of these LAPs can be part of a user BD_ADDR.

The reserved LAP addresses are 0x9E8B00-0x9E8B3F. The general inquiry LAP is 0x9E8B33. All addresses have the LSB at the rightmost position, hexadecimal notation. The default check initialization (DCI) is used as the UAP whenever one of the reserved LAP addresses is used. The DCI is defined to be 0x00 (hexadecimal).

1.3 ACCESS CODES

In the Bluetooth system all transmissions over the physical channel begin with an access code. Three different access codes are defined, see also Section 6.3.1 on page 108:

- device access code (DAC)
- channel access code (CAC)
- inquiry access code (IAC)

All access codes are derived from the LAP of a device address or an inquiry address. The device access code is used during **page**, **page scan** and **page response** substates and shall be derived from the paged device's BD_ADDR. The channel access code is used in the **CONNECTION** state and forms the beginning of all packets exchanged on the piconet physical channel. The channel access code shall be derived from the LAP of the master's BD_ADDR. Finally, the inquiry access code shall be used in the **inquiry** substate. There is one general IAC (GIAC) for general inquiry operations and there are 63 dedicated IACs (DIACs) for dedicated inquiry operations.

The access code also indicates to the receiver the arrival of a packet. It is used for timing synchronization and offset compensation. The receiver correlates against the entire synchronization word in the access code, providing very robust signaling.

2 PHYSICAL CHANNELS

The lowest architectural layer in the Bluetooth system is the physical channel. A number of types of physical channels are defined. All Bluetooth physical channels are characterized by the combination of a pseudo-random frequency hopping sequence, the specific slot timing of the transmissions, the access code and packet header encoding. These aspects, together with the range of the transmitters, define the signature of the physical channel. For the basic and adapted piconet physical channels frequency hopping is used to change frequency periodically to reduce the effects of interference and to satisfy local regulatory requirements.

Two devices that wish to communicate use a shared physical channel for this communication. To achieve this, their transceivers must be tuned to the same RF frequency at the same time, and they must be within a nominal range of each other.

Given that the number of RF carriers is limited and that many Bluetooth devices could be operating independently within the same spatial and temporal area there is a strong likelihood of two independent Bluetooth devices having their transceivers tuned to the same RF carrier, resulting in a physical channel collision. To mitigate the unwanted effects of this collision each transmission on a physical channel starts with an access code that is used as a correlation code by devices tuned to the physical channel. This channel access code is a property of the physical channel. The access code is always present at the start of every transmitted packet.

Four Bluetooth physical channels are defined. Each is optimized and used for a different purpose. Two of these physical channels (the basic piconet channel and adapted piconet channel) are used for communication between connected devices and are associated with a specific piconet. The remaining physical channels are used for discovering (the inquiry scan channel) and connecting (the page scan channel) Bluetooth devices.

A Bluetooth device can only use one of these physical channels at any given time. In order to support multiple concurrent operations the device uses time-division multiplexing between the channels. In this way a Bluetooth device can appear to operate simultaneously in several piconets, as well as being discoverable and connectable.

Whenever a Bluetooth device is synchronized to the timing, frequency and access code of a physical channel it is said to be 'connected' to this channel (whether or not it is actively involved in communications over the channel.) At a minimum, a device need only be capable of connection to one physical channel at a time, however, advanced devices may be capable of connecting simultaneously to more than one physical channel, but the specification does not assume that this is possible.

2.1 PHYSICAL CHANNEL DEFINITION

Physical channels are defined by a pseudo-random RF channel hopping sequence, the packet (slot) timing and an access code. The hopping sequence is determined by the UAP and LAP of a Bluetooth device address and the selected hopping sequence. The phase in the hopping sequence is determined by the Bluetooth clock. All physical channels are subdivided into time slots whose length is different depending on the physical channel. Within the physical channel, each reception or transmission event is associated with a time slot or time slots. For each reception or transmission event an RF channel is selected by the hop selection kernel (see Section 2.6 on page 81).The maximum hop rate is 1600 hops/s in the **CONNECTION** state and the maximum is 3200 hops/s in the **inquiry** and **page** substates.

The following physical channels are defined:

- basic piconet physical channel
- adapted piconet physical channel
- page scan physical channel
- inquiry scan physical channel

2.2 BASIC PICONET PHYSICAL CHANNEL

During the **CONNECTION** state the basic piconet physical channel is used by default. The adapted piconet physical channel may also be used. The adapted piconet physical channel is identical to the basic piconet physical channel except for the differences listed in Section 2.3 on page 74.

2.2.1 Master-slave Definition

The basic piconet physical channel is defined by the master of the piconet. The master controls the traffic on the piconet physical channel by a polling scheme. (see Section 8.5 on page 163)

By definition, the device that initiates a connection by paging is the master. Once a piconet has been established, master-slave roles may be exchanged. This is described in Section 8.6.5 on page 170.

2.2.2 Hopping Characteristics

The basic piconet physical channel is characterized by a pseudo-random hopping through all 79 RF channels. The frequency hopping in the piconet physical channel is determined by the Bluetooth clock and BD_ADDR of the master. When the piconet is established, the master clock is communicated to the slaves. Each slave shall add an offset to its native clock to synchronize with the master clock. Since the clocks are independent, the offsets must be updated regularly. All devices participating in the piconet are time-synchronized and hop-synchronized to the channel.

The basic piconet physical channel uses the basic channel hopping sequence and is described in Section 2.6 on page 81.

2.2.3 Time Slots

The basic piconet physical channel is divided into time slots, each 625 μs in length. The time slots are numbered according to the most significant 27 bits of the Bluetooth clock CLK_{28-1} of the piconet master. The slot numbering ranges from 0 to 2^{27}-1 and is cyclic with a cycle length of 2^{27}. The time slot number is denoted as k.

A TDD scheme is used where master and slave alternately transmit, see Figure 2.1 on page 70. The packet start shall be aligned with the slot start. Packets may extend over up to five time slots.

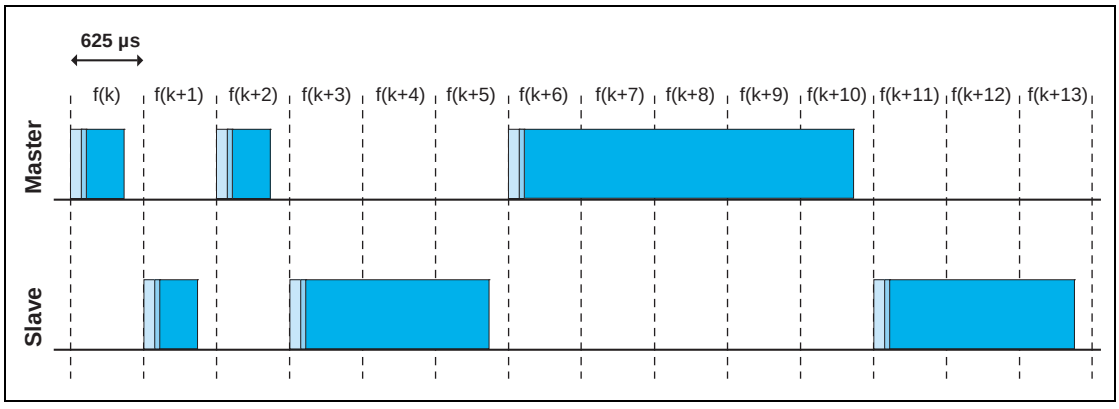

Figure 2.1: Multi-slot packets

The term *slot pairs* is used to indicate two adjacent time slots starting with a master-to-slave transmission slot.

2.2.4 Piconet clocks

CLK is the master clock of the piconet. It shall be used for all timing and scheduling activities in the piconet. All devices shall use the CLK to schedule their transmission and reception. The CLK shall be derived from the native clock CLKN (see Section 1.1 on page 64) by adding an offset, see Figure 2.2 on page 71. The offset shall be zero for the master since CLK is identical to its own native clock CLKN. Each slave shall add an appropriate offset to its CLKN such that the CLK corresponds to the CLKN of the master. Although all CLKNs in the devices run at the same nominal rate, mutual drift causes inaccuracies in CLK. Therefore, the offsets in the slaves must be regularly updated such that CLK is approximately CLKN of the master.

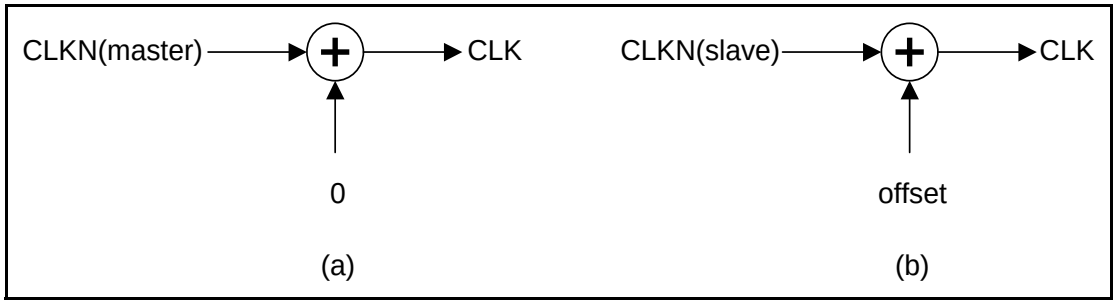

Figure 2.2: Derivation of CLK in master (a) and in slave (b).

2.2.5 Transmit/receive Timing

The master transmission shall always start at even numbered time slots (CLK_1=0) and the slave transmission shall always start at odd numbered time slots (CLK_1=1). Due to packet types that cover more than a single slot, master transmission may continue in odd numbered slots and slave transmission may continue in even numbered slots, see Figure 2.1 on page 70.

All timing diagrams shown in this chapter are based on the signals as present at the antenna. The term “exact” when used to describe timing refers to an ideal transmission or reception and neglects timing jitter and clock frequency imperfections.

The average timing of packet transmission shall not drift faster than 20 ppm relative to the ideal slot timing of 625 µs. The instantaneous timing shall not deviate more than 1 µs from the average timing. Thus, the absolute packet transmission timing t_k of slot boundary k shall fulfill the equation:

$$t_k = \left(\sum_{i=1}^{k} (1 + d_i) T_N \right) + j_k + \text{offset}, \qquad \text{(EQ 1)}$$

where T_N is the nominal slot length (625 µs), j_k denotes jitter ($|j_k| \leq 1$ µs) at the start of slot k, and, d_k, denotes the drift ($|d_k| \leq 20$ ppm) within slot k. The jitter and drift can vary arbitrarily within the given limits for every slot, while *offset* is an

arbitrary but fixed constant. For hold, Park, and sniff the drift and jitter parameters specified in Link Manager Protocol [Part C] Section 4.3.1 on page 272 apply.

2.2.5.1 Piconet physical channel timing

In the figures, only single-slot packets are shown as an example.

The master TX/RX timing is shown in Figure 2.3 on page 72. In Figure 2.3 and Figure 2.4 the channel hopping frequencies are indicated by *f(k)* where k is the time slot number. After transmission, a return packet is expected N × 625 µs after the start of the TX packet where N is an odd, integer larger than 0. N depends on the type of the transmitted packet.

To allow for some time slipping, an uncertainty window is defined around the exact receive timing. During normal operation, the window length shall be 20 µs, which allows the RX packet to arrive up to 10 µs too early or 10 µs too late. It is recommended that slaves implement variable sized windows or time tracking to accommodate a master's absence of more than 250ms.

During the beginning of the RX cycle, the access correlator shall search for the correct channel access code over the uncertainty window. If an event trigger does not occur the receiver may go to sleep until the next RX event. If in the course of the search, it becomes apparent that the correlation output will never exceed the final threshold, the receiver may go to sleep earlier. If a trigger event occurs, the receiver shall remain open to receive the rest of the packet unless the packet is for another device, a non-recoverable header error is detected, or a non-recoverable payload error is detected.

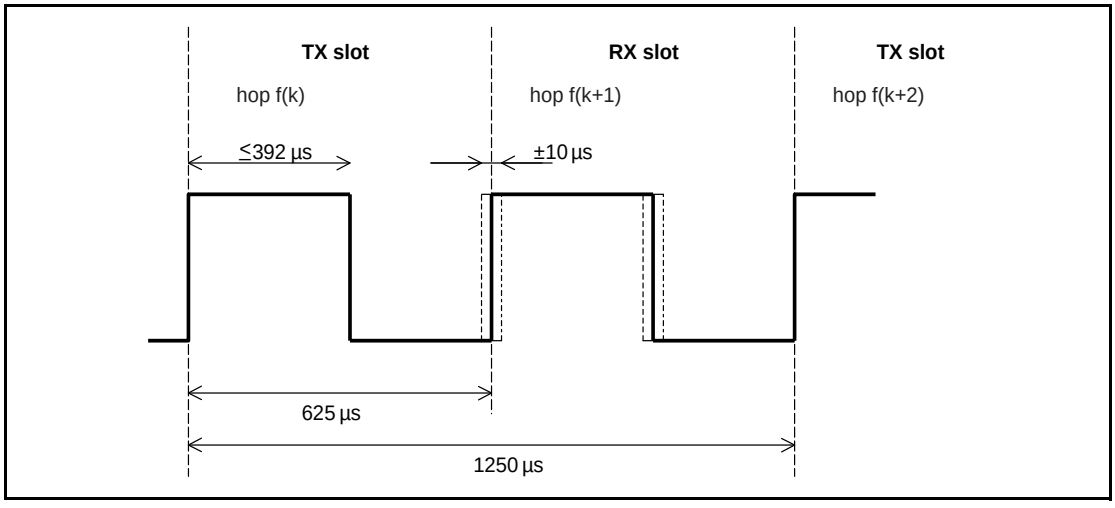

Figure 2.3: RX/TX cycle of master transceiver in normal mode for single-slot packets.

Each master transmission shall be derived from bit 2 of the Master's native Bluetooth clock, thus the current transmission will be scheduled Mx1250µs after the start of the previous master TX burst where M depends on the transmitted and received packet type and is an even, integer larger than 0. The master TX

timing shall be derived from the master's native Bluetooth clock, and thus it will not be affected by time drifts in the slave(s).

Slaves maintain an estimate of the master's native clock by adding a timing offset to the slave's native clock (see Section 2.2.4 on page 71). This offset shall be updated each time a packet is received from the master. By comparing the exact RX timing of the received packet with the estimated RX timing, slaves shall correct the offset for any timing misalignments. Since only the channel access code is required to synchronize the slave, slave RX timing can be corrected with any packet sent in the master-to-slave transmission slot.

The slave's TX/RX timing is shown in Figure 2.4 on page 73. The slave's transmission shall be scheduled N × 625µs after the start of the slave's RX packet where N is an odd, positive integer larger than 0. If the slave's RX timing drifts, so will its TX timing. During periods when a slave is in the active mode (see Section 8.6 on page 164) and is prevented from receiving valid channel access codes from the master due to local RF interference, slave activity in a different piconet, or any other reason, the slave may increase its receive uncertainty window and/or use predicted timing drift to increase the probability of receiving the master's bursts when reception resumes.

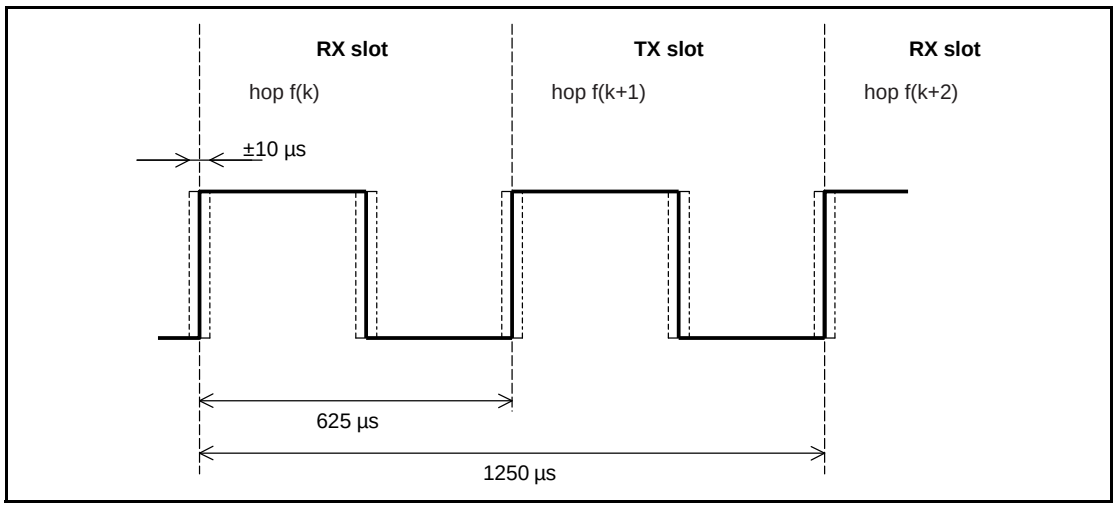

Figure 2.4: RX/TX cycle of slave transceiver in normal mode for single-slot packets.

2.2.5.2 Piconet physical channel re-synchronization

In the piconet physical channel, a slave can loose synchronization if it does not receive a packet from the master at least every 250ms (or less if the low power clock is used). This can occur in sniff, hold, and Park in a scatternet or due to interference. When re-synchronizing to the piconet physical channel a slave device shall listen for the master before it may send information. In this case, the length of the search window in the slave device may be increased from 20 µs to a larger value X µs as illustrated in Figure 2.5 on page 74. Note that only RX hop frequencies are used. The hop frequency used in the master-to-slave (RX) slot shall also be used in the uncertainty window, even when it is

extended into the preceding time interval normally used for the slave-to-master (TX) slot.

If the length of search window, X, exceeds 1250 µs, consecutive windows shall avoid overlapping search windows. Consecutive windows should instead be centered at *f(k), f(k+4),... f(k+4i)* (where 'i' is an integer), which gives a maximum value X=2500 µs, or even at *f(k), f(k+6),...f(k+6i)* which gives a maximum value X=3750 µs. The RX hop frequencies used shall correspond to the master-to-slave transmission slots.

It is recommended that single slot packets are transmitted by the master during slave re-synchronization.

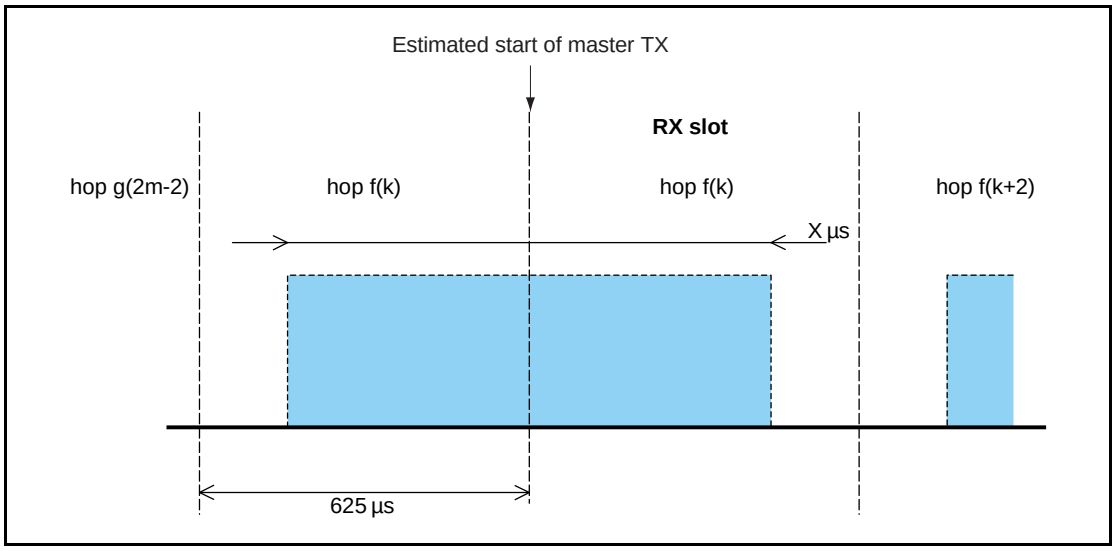

Figure 2.5: RX timing of slave returning from hold mode.

2.3 ADAPTED PICONET PHYSICAL CHANNEL

2.3.1 Hopping Characteristics

The adapted piconet physical channel shall use at least N_{min} RF channels (where N_{min} is 20).

The adapted piconet physical channel uses the adapted channel hopping sequence described in Section 2.6 on page 81.

Adapted piconet physical channels can be used for connected devices that have adaptive frequency hopping (AFH) enabled. There are two distinctions between basic and adapted piconet physical channels. The first is the same channel mechanism that makes the slave frequency the same as the preceding master transmission. The second aspect is that the adapted piconet physical channel may be based on less than the full 79 frequencies of the basic piconet physical channel.

2.4 PAGE SCAN PHYSICAL CHANNEL

Although master and slave roles are not defined prior to a connection, the term *master* is used for the paging device (that becomes a master in the **CONNECTION** state) and *slave* is used for the page scanning device (that becomes a slave in the **CONNECTION** state).

2.4.1 Clock Estimate for Paging

A paging device uses an estimate of the native clock of the page scanning device, CLKE; i.e. an offset shall be added to the CLKN of the pager to approximate the CLKN of the recipient, see Figure 2.6 on page 75. CLKE shall be derived from the reference CLKN by adding an offset. By using the CLKN of the recipient, the pager might be able to speed up the connection establishment.

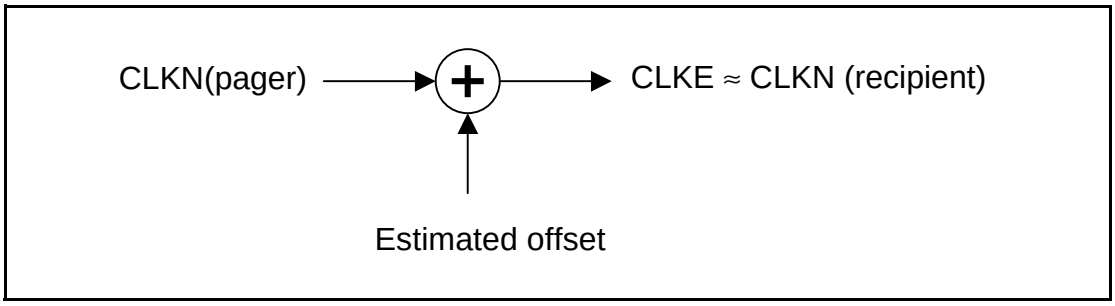

Figure 2.6: Derivation of CLKE.

2.4.2 Hopping Characteristics

The page scan physical channel follows a slower hopping pattern than the basic piconet physical channel and is a short pseudo-random hopping sequence through the RF channels. The timing of the page scan channel shall be determined by the native Bluetooth clock of the scanning device. The frequency hopping sequence is determined by the Bluetooth address of the scanning device.

The page scan physical channel uses the page, master page response, slave page response, and page scan hopping sequences specified in Section 2.6 on page 81.

2.4.3 Paging Procedure Timing

During the paging procedure, the master shall transmit paging messages (see Table 8.3 on page 154) corresponding to the slave to be connected. Since the paging message is a very short packet, the hop rate is 3200 hops/s. In a single TX slot interval, the paging device shall transmit on two different hop frequencies. In Figure 2.7 through Figure 2.11, *f(k)* is used for the frequencies of the page hopping sequence and *f'(k)* denotes the corresponding page response sequence frequencies. The first transmission starts where $CLK_0 = 0$ and the second transmission starts where $CLK_0 = 1$.

In a single RX slot interval, the paging device shall listen for the slave page response message on two different hop frequencies. Similar to transmission, the nominal reception starts where $CLK_0 = 0$ and the second reception nominally starts where $CLK_0 = 1$; see Figure 2.7 on page 76. During the TX slot, the paging device shall send the paging message at the TX hop frequencies *f(k)* and *f*(*k*+1*)*. In the RX slot, it shall listen for a response on the corresponding RX hop frequencies *f'(k)* and *f'*(*k*+1*)*. The listening periods shall be exactly timed 625 µs after the corresponding paging packets, and shall include a ±10 µs uncertainty window.

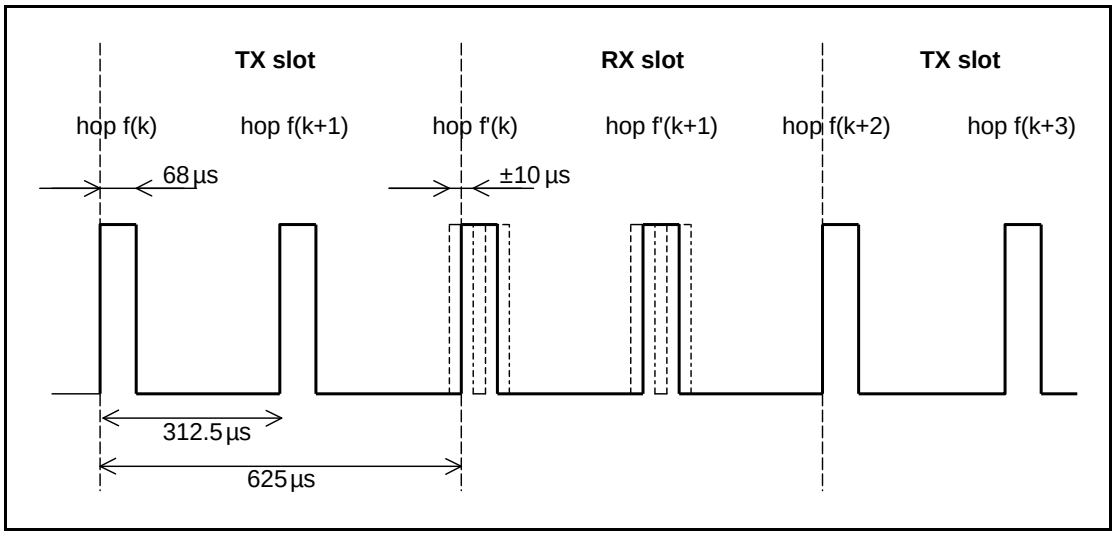

Figure 2.7: RX/TX cycle of transceiver in PAGE mode.

2.4.4 Page Response Timing

At connection setup a master page response packet is transmitted from the master to the slave (see Table 8.3 on page 154). This packet establishes the timing and frequency synchronization. After the slave device has received the page message, it shall return a response message that consists of the slave page response packet and shall follow 625 µs after the receipt of the page message. The master shall send the master page response packet in the TX slot following the RX slot in which it received the slave response, according to the RX/TX timing of the master. The time difference between the slave page response and master page response message will depend on the timing of the page message the slave received. In Figure 2.8 on page 77, the slave receives the paging message sent **first** in the master-to-slave slot. It then responds with a first slave page response packet in the first half of the slave-to-master slot. The timing of the master page response packet is based on the timing of the page message sent first in the preceding master-to-slave slot: there is an exact 1250 µs delay between the first page message and the master page response packet. The packet is sent at the hop frequency *f(k*+1*)* which is the hop frequency following the hop frequency *f(k)* the page message was received in.

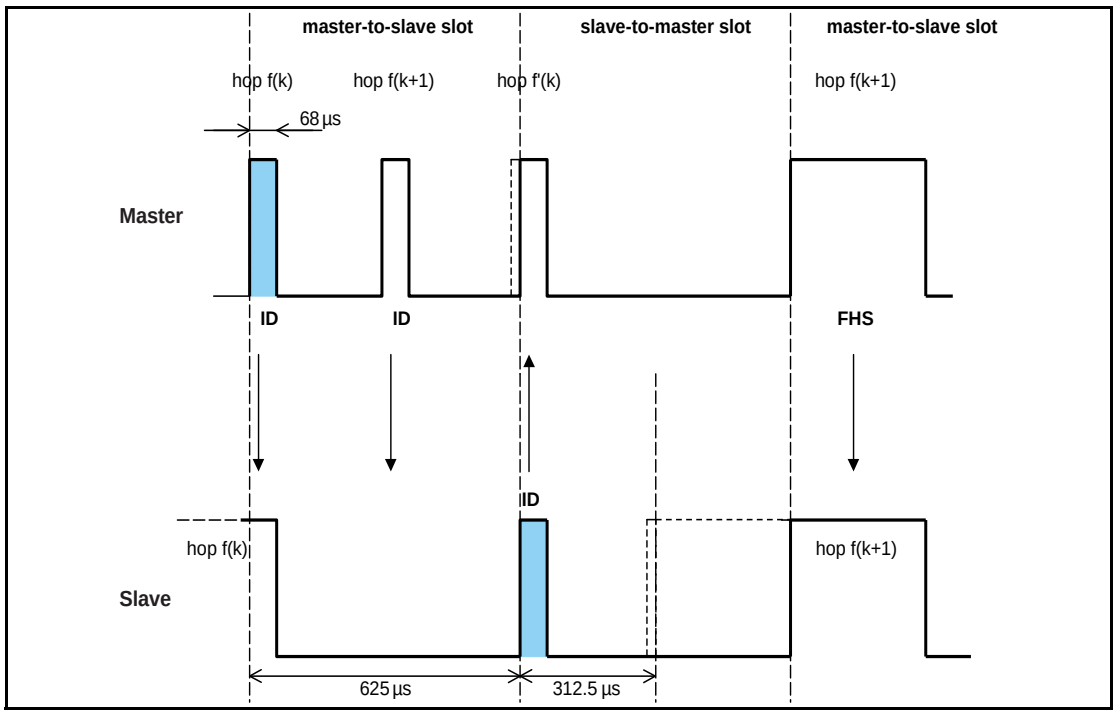

Figure 2.8: Timing of page response packets on successful page in first half slot

In Figure 2.9 on page 78, the slave receives the paging message sent **second** in the master-to-slave slot. It then responds with a slave page response packet in the second half of the slave-to-master slot exactly 625 µs after the receipt of the page message. The timing of the master page response packet is still based on the timing of the page message sent **first** in the preceding master-to-slave slot: there is an exact 1250 µs delay between the **first** page message and the master page response packet. The packet is sent at the hop frequency *f*(*k+2)* which is the hop frequency following the hop frequency *f*(*k+1)* the page message was received in.

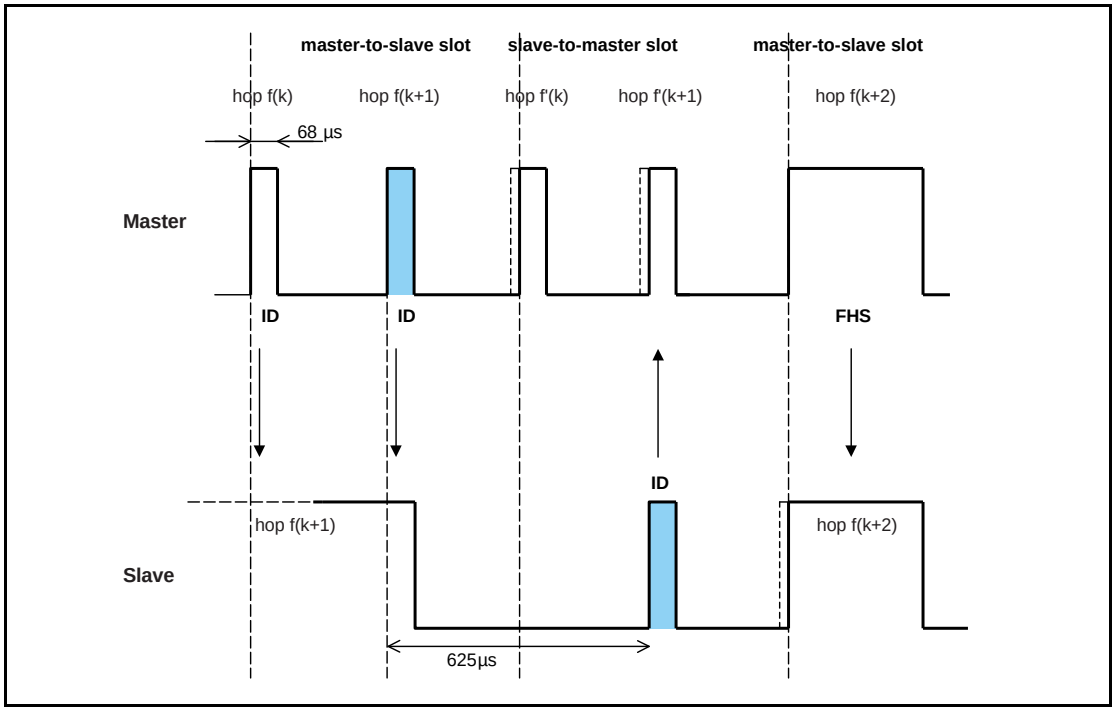

Figure 2.9: Timing of page response packets on successful page in second half slot

The slave shall adjust its RX/TX timing according to the reception of the master page response packet (and not according to the reception of the page message). That is, the second slave page response message that acknowledges the reception of the master page response packet shall be transmitted 625 µs after the start of the master page response packet.

2.5 INQUIRY SCAN PHYSICAL CHANNEL

Although master and slave roles are not defined prior to a connection, the term *master* is used for the inquiring device and *slave* is used for the inquiry scanning device.

2.5.1 Clock for Inquiry

The clock used for inquiry and inquiry scan shall be the device's native clock.

2.5.2 Hopping Characteristics

The inquiry scan channel follows a slower hopping pattern than the piconet physical channel and is a short pseudo-random hopping sequence through the RF channels. The timing of the inquiry scan channel is determined by the native Bluetooth clock of the scanning device while the frequency hopping sequence is determined by the general inquiry access code.

The inquiry scan physical channel uses the inquiry, inquiry response, and inquiry scan hopping sequences described in Section 2.6 on page 81.

2.5.3 Inquiry Procedure Timing

During the inquiry procedure, the master shall transmit inquiry messages with the general or dedicated inquiry access code. The timing for inquiry is the same as for paging (see Section 2.4.3 on page 76).

2.5.4 Inquiry Response Timing

An inquiry response packet is transmitted from the slave to the master after the slave has received an inquiry message (see Table 8.5 on page 163). This packet contains information necessary for the inquiring master to page the slave (see definition of the FHS packet in Section 6.5.1.4 on page 117) and follows 625µs after the receipt of the inquiry message. If the slave transmits an extended inquiry response packet, it shall be transmitted1250µs after the start of the inquiry response packet.

In Figure 2.10 and Figure 2.11, *f(k)* is used for the frequencies of the inquiry hopping sequence and f'(k) denotes the corresponding inquiry response sequence frequency. The inquiry response packet and the extended inquiry response packet are received by the master at the hop frequency *f'(k)* when the inquiry message received by the slave was first in the master-to-slave slot.

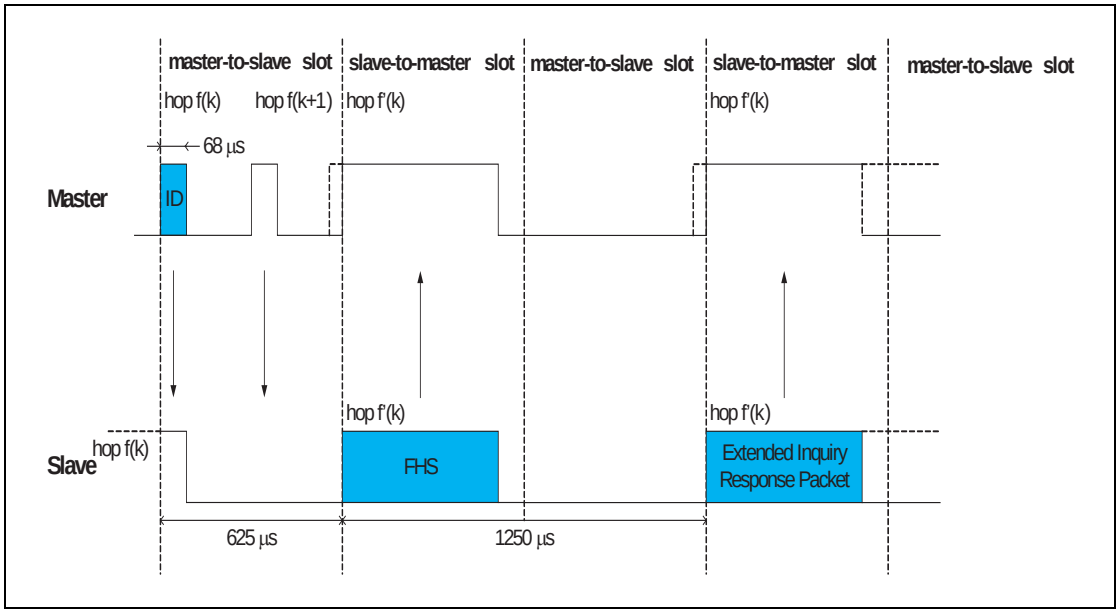

Figure 2.10: Timing of inquiry response packets on successful inquiry in first half slot

When the inquiry message received by the slave was the second in the master-to-slave slot the inquiry response packet and the extended inquiry response packet are received by the master at the hop frequency *f'(k+1)*.

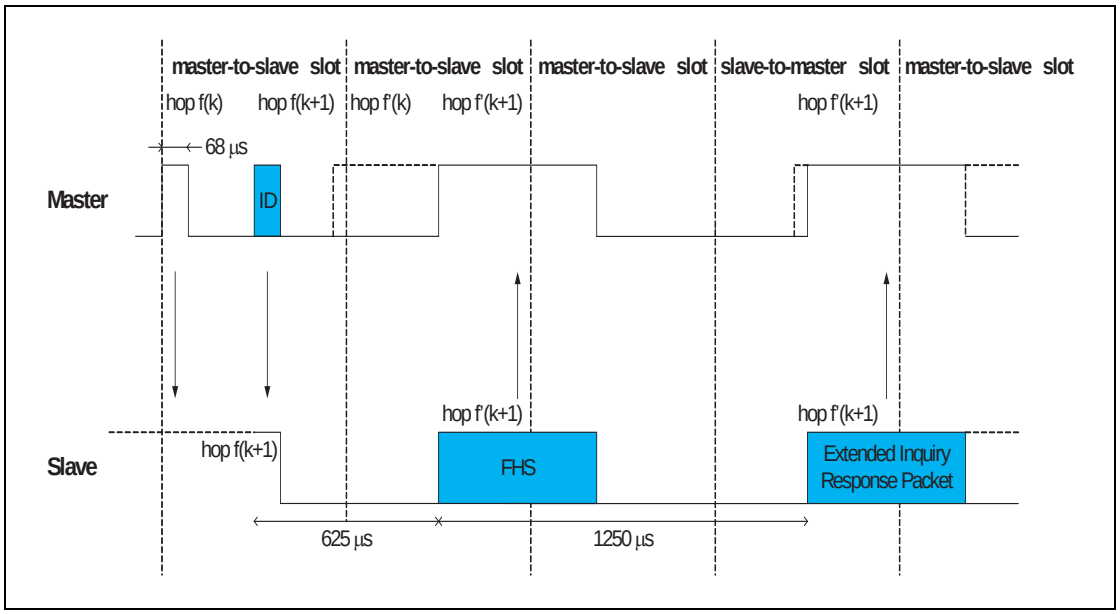

Figure 2.11: Timing of inquiry response packets on successful inquiry in second half slot

2.6 HOP SELECTION

Bluetooth devices shall use the hopping kernel as defined in the following sections.

In total, six types of hopping sequence are defined – five for the basic hop system and one for an adapted set of hop locations used by adaptive frequency hopping (AFH). These sequences are:

- A **page hopping sequence** with 32 wake-up frequencies distributed equally over the 79 MHz, with a period length of 32;
- A **page response hopping sequence** covering 32 response frequencies that are in a one-to-one correspondence to the current page hopping sequence. The master and slave use different rules to obtain the same sequence;
- An **inquiry hopping sequence** with 32 wake-up frequencies distributed equally over the 79 MHz, with a period length of 32;
- An **inquiry response hopping sequence** covering 32 response frequencies that are in a one-to-one correspondence to the current inquiry hopping sequence.
- A **basic channel hopping sequence** which has a very long period length, which does not show repetitive patterns over a short time interval, and which distributes the hop frequencies equally over the 79 MHz during a short time interval.
- An **adapted channel hopping sequence** derived from the basic channel hopping sequence which uses the same channel mechanism and may use fewer than 79 frequencies. The adapted channel hopping sequence is only used in place of the basic channel hopping sequence. All other hopping sequences are not affected by hop sequence adaptation.

2.6.1 General Selection Scheme

The selection scheme consists of two parts:

- selecting a sequence;
- mapping this sequence onto the hop frequencies;

The general block diagram of the hop selection scheme is shown in Figure 2.12 on page 82. The mapping from the input to a particular RF channel index is performed in the selection box.

The inputs to the selection box are the selected clock, frozen clock, N, k_{offset}, address, sequence selection and AFH_channel_map. The source of the clock input depends on the hopping sequence selected. Additionally, each hopping sequence uses different bits of the clock (see Table 2.2 on page 90). N and k_{offset} are defined in Section 2.6.4 on page 89.

The *sequence selection* input can be set to the following values:

- page scan
- inquiry scan
- page
- inquiry
- master page response
- slave page response
- inquiry response
- basic channel
- adapted channel

The address input consists of 28 bits including the entire LAP and the 4 LSBs of the UAP. This is designated as the UAP/LAP. When the basic or adapted channel hopping sequence is selected, the Bluetooth device address of the master (BD_ADDR) shall be used. When the page, master page response, slave page response, or page scan hopping sequences are selected the BD_ADDR given by the Host of the paged device shall be used (see HCI Create Connection Command [Part E] Section 7.1.5 on page 445). When the inquiry, inquiry response, or inquiry scan hopping sequences are selected, the UAP/LAP corresponding to the GIAC shall be used even if it concerns a DIAC. Whenever one of the reserved BD_ADDRs (see Section 1.2.1 on page 66) is used for generating a frequency hop sequence, the UAP shall be replaced by the default check initialization (DCI, see Section 7.1 on page 133). The hopping sequence is selected by the sequence selection input to the selection box.

When the adapted channel hopping sequence is selected, the *AFH_channel_map* is an additional input to the selection box. The *AFH_channel_map* indicates which channels shall be *used* and which shall be *unused*. These terms are defined in Section 2.6.3 on page 88.

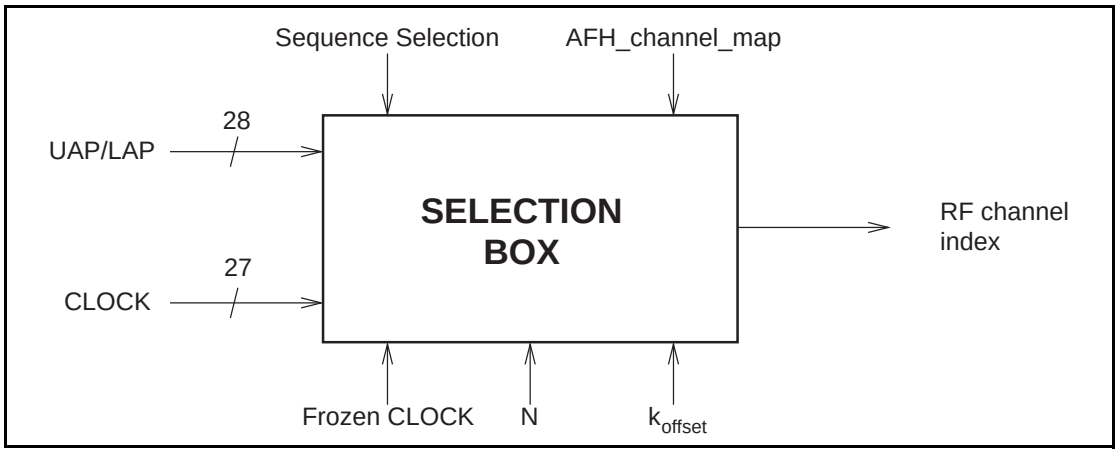

Figure 2.12: General block diagram of hop selection scheme.

The output, *RF channel index*, constitutes a pseudo-random sequence. The RF channel index is mapped to RF channel frequencies using the equation in Table 2.1 on page 33 in the Radio Specification.

The selection scheme chooses a segment of 32 hop frequencies spanning about 64 MHz and visits these hops in a pseudo-random order. Next, a different 32-hop segment is chosen, etc. In the page, master page response, slave page response, page scan, inquiry, inquiry response and inquiry scan hopping sequences, the same 32-hop segment is used all the time (the segment is selected by the address; different devices will have different paging segments). When the basic channel hopping sequence is selected, the output constitutes a pseudo-random sequence that slides through the 79 hops. The principle is depicted in Figure 2.13 on page 83.

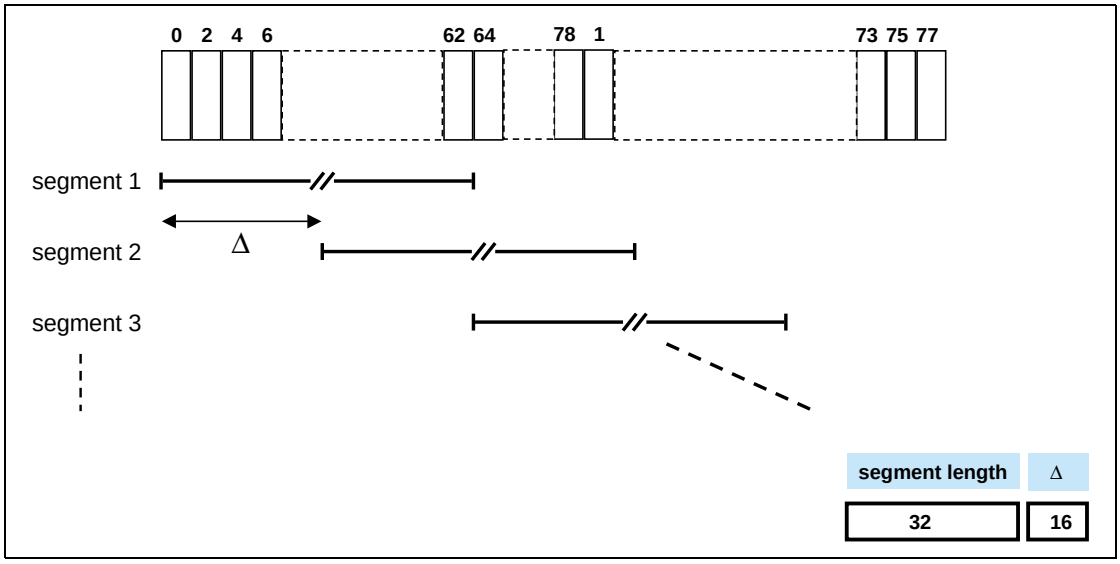

Figure 2.13: Hop selection scheme in CONNECTION state.

The RF frequency shall remain fixed for the duration of the packet. The RF frequency for the packet shall be derived from the Bluetooth clock value in the first slot of the packet. The RF frequency in the first slot after a multi-slot packet shall use the frequency as determined by the Bluetooth clock value for that slot. Figure 2.14 on page 84 illustrates the hop definition on single- and multi-slot packets.

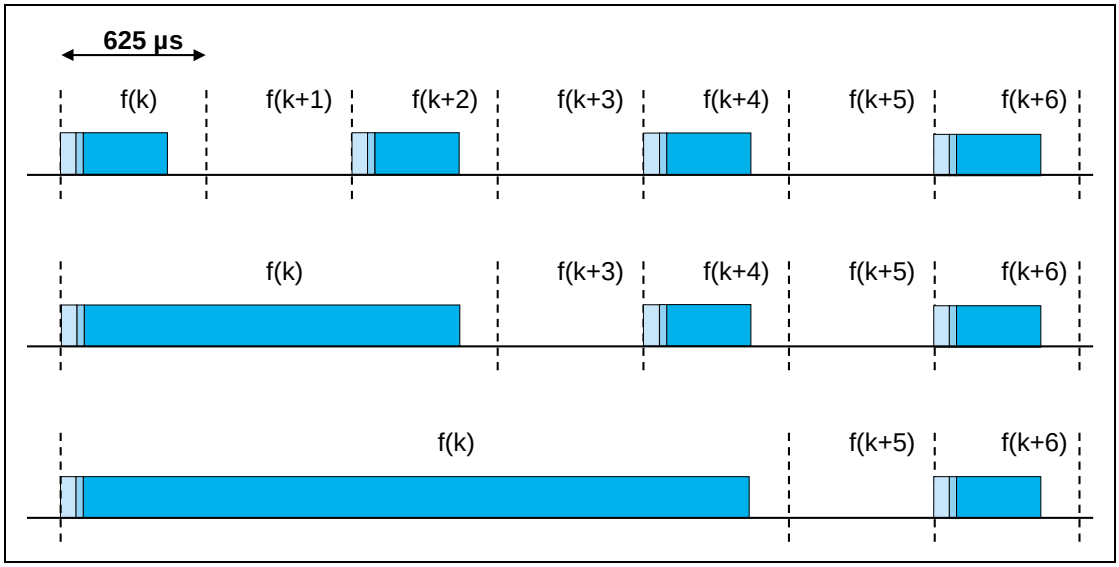

Figure 2.14: Single- and multi-slot packets.

When the adapted channel hopping sequence is used, the pseudo-random sequence contains only frequencies that are in the RF channel set defined by the *AFH_channel_map* input. The adapted sequence has similar statistical properties to the non-adapted hop sequence. In addition, the slave responds with its packet on the same RF channel that was used by the master to address that slave (or would have been in the case of a synchronous reserved slot without a validly received master-to-slave transmission). This is called the *same channel mechanism* of AFH. Thus, the RF channel used for the master to slave packet is also used for the immediately following slave to master packet. An example of the same channel mechanism is illustrated in Figure 2.15 on page 84. The same channel mechanism shall be used whenever the adapted channel hopping sequence is selected.

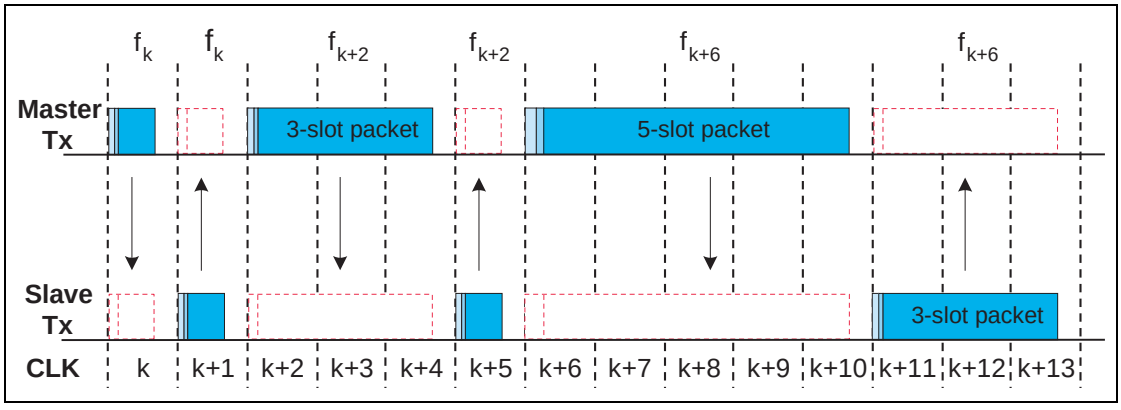

Figure 2.15: Example of the same channel mechanism.

2.6.2 Selection Kernel

The basic hop selection kernel shall be as shown in Figure 2.16 on page 85 and is used for the page, page response, inquiry, inquiry response and basic channel hopping selection kernels. In these substates the AFH_channel_map input is unused. The adapted channel hopping selection kernel is described in Section 2.6.3 on page 88. The X input determines the phase in the 32-hop segment, whereas Y1 and Y2 selects between master-to-slave and slave-to-master. The inputs A to D determine the ordering within the segment, the inputs E and F determine the mapping onto the hop frequencies. The kernel addresses a register containing the RF channel indices. This list is ordered so that first all even RF channel indices are listed and then all odd hop frequencies. In this way, a 32-hop segment spans about 64 MHz.

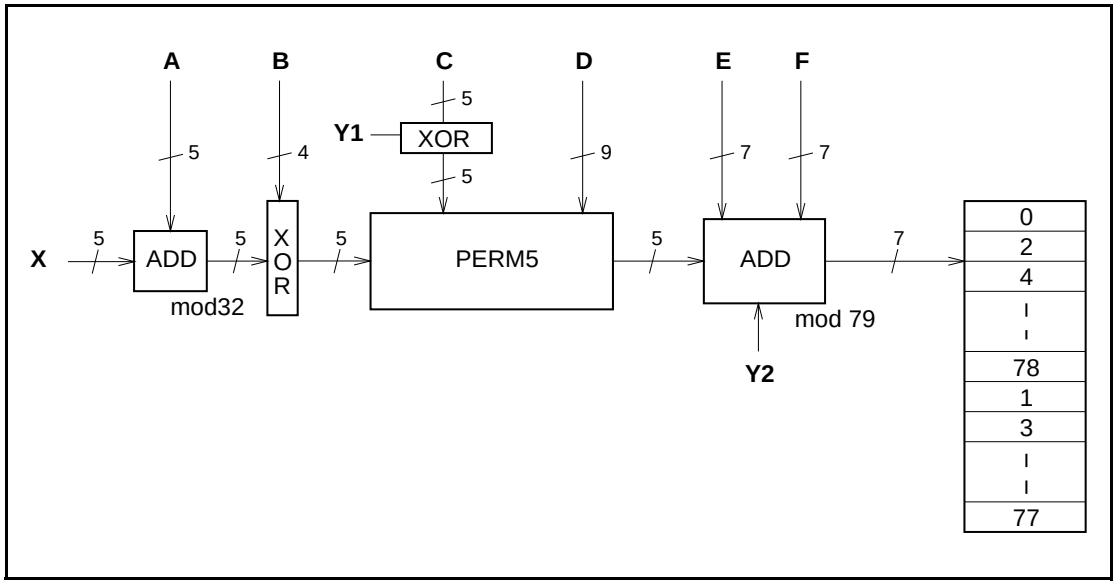

Figure 2.16: Block diagram of the basic hop selection kernel for the hop system.

The selection procedure consists of an addition, an XOR operation, a permutation operation, an addition, and finally a register selection. In the remainder of this chapter, the notation A_i is used for bit i of the BD_ADDR.

2.6.2.1 First addition operation

The first addition operation only adds a constant to the phase and applies a modulo 32 operation. For the page hopping sequence, the first addition is redundant since it only changes the phase within the segment. However, when different segments are concatenated (as in the basic channel hopping sequence), the first addition operation will have an impact on the resulting sequence.

2.6.2.2 XOR operation

Let Z' denote the output of the first addition. In the XOR operation, the four LSBs of Z' are modulo-2 added to the address bits $A_{22\text{-}19}$. The operation is illustrated in Figure 2.17 on page 86.

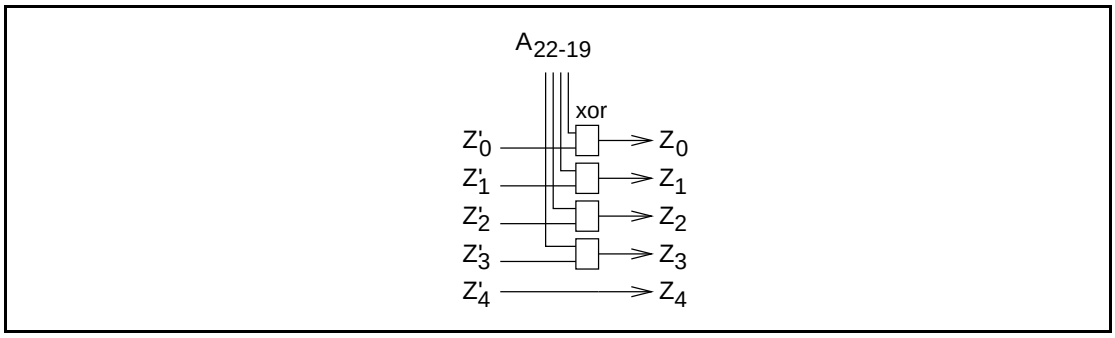

Figure 2.17: XOR operation for the hop system.

2.6.2.3 Permutation operation

The permutation operation involves the switching from 5 inputs to 5 outputs for the hop system, controlled by the control word. The permutation or switching box shall be as shown in Figure 2.18 on page 87. It consists of 7 stages of butterfly operations. The control of the butterflies by the control signals P is shown in Table 2.1. $P_{0\text{-}8}$ corresponds to $D_{0\text{-}8}$, and, P_{i+9} corresponds to $C_i \oplus Y1$ for $i = 0 \ldots 4$ in Figure 2.16.

Control signal	Butterfly		Control signal	Butterfly
P_0	$\{Z_0,Z_1\}$		P_8	$\{Z_1,Z_4\}$
P_1	$\{Z_2,Z_3\}$		P_9	$\{Z_0,Z_3\}$
P_2	$\{Z_1,Z_2\}$		P_{10}	$\{Z_2,Z_4\}$
P_3	$\{Z_3,Z_4\}$		P_{11}	$\{Z_1,Z_3\}$
P_4	$\{Z_0,Z_4\}$		P_{12}	$\{Z_0,Z_3\}$
P_5	$\{Z_1,Z_3\}$		P_{13}	$\{Z_1,Z_2\}$
P_6	$\{Z_0,Z_2\}$			
P_7	$\{Z_3,Z_4\}$			

Table 2.1: Control of the butterflies for the hop system

The Z input is the output of the XOR operation as described in the previous section. The butterfly operation can be implemented with multiplexers as depicted in Figure 2.19 on page 87.

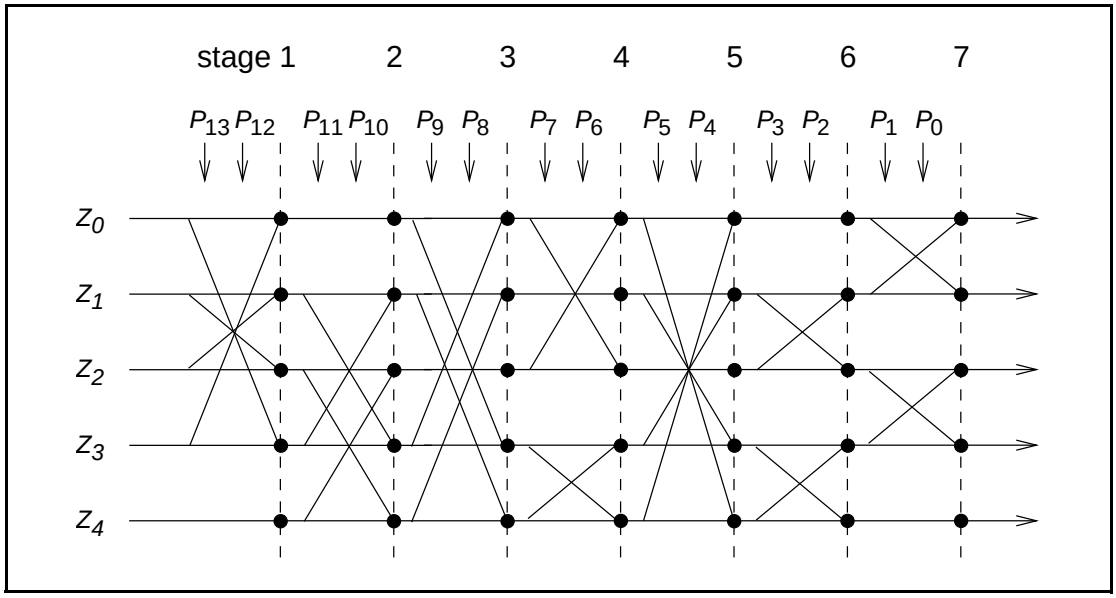

Figure 2.18: Permutation operation for the hop system.

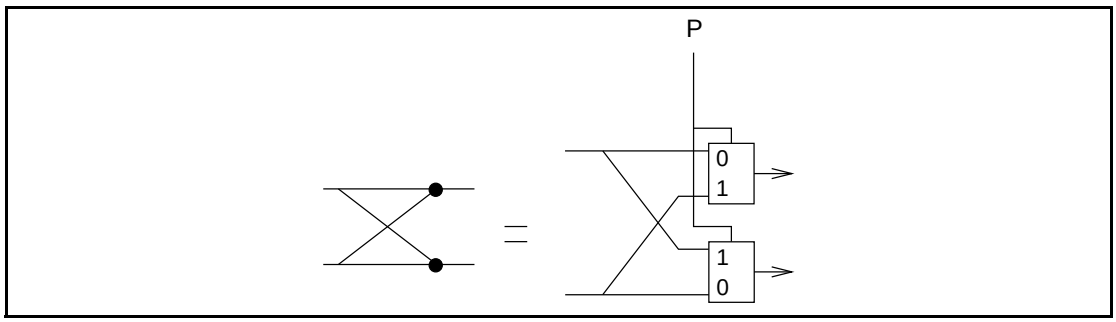

Figure 2.19: Butterfly implementation.

2.6.2.4 Second addition operation

The addition operation only adds a constant to the output of the permutation operation. The addition is applied modulo 79.

2.6.2.5 Register bank

The output of the adder addresses a bank of 79 registers. The registers are loaded with the synthesizer code words corresponding to the hop frequencies 0 to 78. Note that the upper half of the bank contains the even hop frequencies, whereas the lower half of the bank contains the odd hop frequencies.

2.6.3 Adapted Hop Selection Kernel

The adapted hop selection kernel is based on the basic hop selection kernel defined in the preceding sections.

The inputs to the adapted hop selection kernel are the same as for the basic hop system kernel except that the input AFH_channel_map (defined in Link Manager Protocol [Part C] Section 5.2 on page 317) is used. The *AFH_channel_map* indicates which RF channels shall be *used* and which shall be *unused*. When hop sequence adaptation is enabled, the number of *used* RF channels may be reduced from 79 to some smaller value N. All devices shall be capable of operating on an adapted hop sequence (AHS) with $N_{min} \leq N \leq 79$, with any combination of *used* RF channels within the *AFH_channel_map* that meets this constraint. N_{min} is defined in Section 2.3.1 on page 74.

Adaptation of the hopping sequence is achieved through two additions to the basic channel hopping sequence according to Figure 2.16 on page 85:

- *Unused* RF channels are re-mapped uniformly onto *used* RF channels. That is, if the hop selection kernel of the basic system generates an *unused* RF channel, an alternative RF channel out of the set of *used* RF channels is selected pseudo-randomly.
- The *used* RF channel generated for the master-to-slave packet is also used for the immediately following slave-to-master packet (see Section 2.6.1 on page 81).

2.6.3.1 Channel re-mapping function

When the adapted hop selection kernel is selected, the basic hop selection kernel according to Figure 2.16 on page 85 is initially used to determine an RF channel. If this RF channel is *unused* according to the *AFH_channel_map*, the *unused* RF channel is re-mapped by the re-mapping function to one of the *used* RF channels. If the RF channel determined by the basic hop selection kernel is already in the set of *used* RF channels, no adjustment is made. The hop sequence of the (non-adapted) basic hop equals the sequence of the adapted selection kernel on all locations where *used* RF channels are generated by the basic hop. This property facilitates non-AFH slaves remaining synchronized while other slaves in the piconet are using the adapted hopping sequence.

A block diagram of the re-mapping mechanism is shown in Figure 2.20 on page 89. The re-mapping function is a post-processing step to the selection kernel from Figure 2.16 on page 85, denoted as ‘Hop selection of the basic hop’. The output f_k of the basic hop selection kernel is an RF channel number that ranges between 0 and 78. This RF channel will either be in the set of *used* RF channels or in the set of *unused* RF channels.

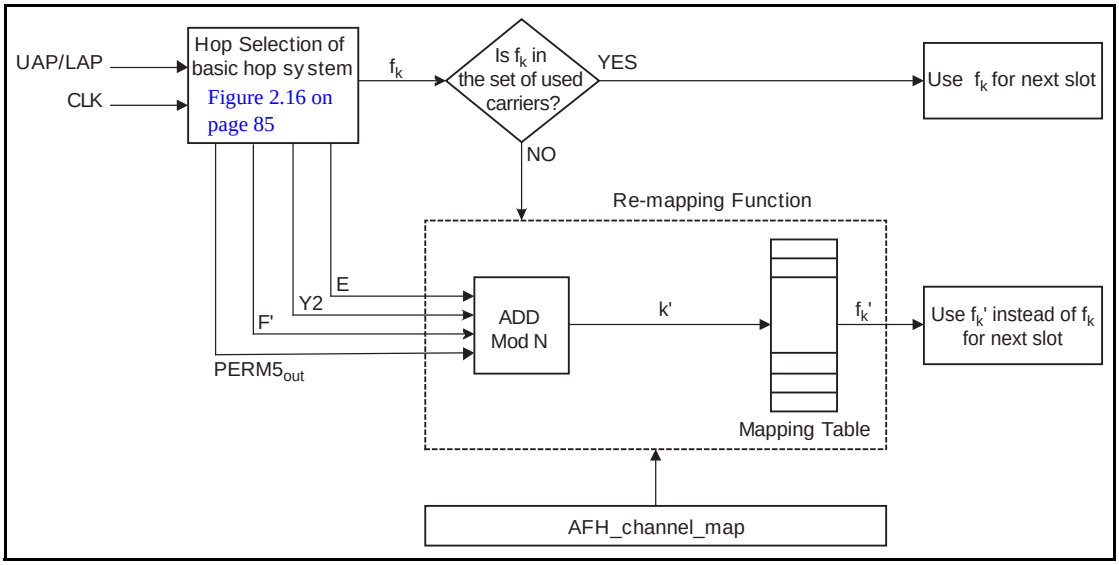

Figure 2.20: Block diagram of adaptive hop selection mechanism

When an unused RF channel is generated by the basic hop selection mechanism, it is re-mapped to the set of *used* RF channels as follows. A new index *k'* $\in$ {0, 1,..., *N*-1} is calculated using some of the parameters from the basic hop selection kernel:

$$k' = (PERM5_{out} + E + F' + Y2) \bmod N$$

where *F'* is defined in Table 2.2 on page 90. The index *k'* is then used to select the re-mapped channel from a mapping table that contains all of the even *used* RF channels in ascending order followed by all the odd *used* RF channels in ascending order (i.e., the mapping table of Figure 2.16 on page 85 with all the *unused* RF channels removed).

2.6.4 Control Word

In the following section X_{j-i}, $i<j$, denotes bits i, i+1,...,j of the bit vector X. By convention, X_0 is the least significant bit of the vector X.

The control word of the kernel is controlled by the overall control signals X, Y1, Y2, A to F, and F' as illustrated in Figure 2.16 on page 85 and Figure 2.20 on page 89. During paging and inquiry, the inputs A to E use the address values as given in the corresponding columns of Table 2.2 on page 90. In addition, the inputs X, Y1 and Y2 are used. The F and F' inputs are unused. The clock bits CLK_{6-2} (i.e., input X) specifies the phase within the length 32 sequence. CLK_1 (i.e., inputs Y1 and Y2) is used to select between TX and RX. The address inputs determine the sequence order within segments. The final mapping onto the hop frequencies is determined by the register contents.

During the **CONNECTION** state (see Section 8.5 on page 163), the inputs A, C and D shall be derived from the address bits being bit-wise XORed with the

clock bits as shown in the “Connection state” column of Table 2.2 on page 90 (the two most significant bits, MSBs, are XORed together, the two second MSBs are XORed together, etc.).

	Page scan / Interlaced Page Scan / Inquiry scan / Interlaced Inquiry Scan	**Page/Inquiry**	**Master/Slave page response and Inquiry response**	**Connection state**
X	$CLKN_{16-12}$ / $(CLKN_{16-12}+16) \bmod 32$ / Xir_{4-0} / $Xir_{4-0}+16) \bmod 32$	Xp_{4-0}/Xi_{4-0}	$Xprm_{4-0}$ / $Xprs_{4-0}$ / Xir_{4-0}	CLK_{6-2}
Y1	0	$CLKE_1/CLKN_1$	$CLKE_1/CLKN_1/1$	CLK_1
Y2	0	$32 \times CLKE_1/$ $32 \times CLKN_1$	$32 \times CLKE_1$ / $32 \times CLKN_1$ / 32×1	$32 \times CLK_1$
A	A_{27-23}	A_{27-23}	A_{27-23}	$A_{27-23} \oplus CLK_{25-21}$
B	A_{22-19}	A_{22-19}	A_{22-19}	A_{22-19}
C	$A_{8,6,4,2,0}$	$A_{8,6,4,2,0}$	$A_{8,6,4,2,0}$	$A_{8,6,4,2,0} \oplus CLK_{20-16}$
D	A_{18-10}	A_{18-10}	A_{18-10}	$A_{18-10} \oplus CLK_{15-7}$
E	$A_{13,11,9,7,5,3,1}$	$A_{13,11,9,7,5,3,1}$	$A_{13,11,9,7,5,3,1}$	$A_{13,11,9,7,5,3,1}$
F	0	0	0	$16 \times CLK_{27-7} \bmod 79$
F’	n/a	n/a	n/a	$16 \times CLK_{27-7} \bmod N$

Table 2.2: Control for hop system.

The five X input bits vary depending on the current state of the device. In the **page scan** and **inquiry scan** substates, the native clock (CLKN) shall be used. In **CONNECTION** state the master clock (CLK) shall be used as input. The situation is somewhat more complicated for the other states.

2.6.4.1 Page scan and inquiry scan hopping sequences

When the sequence selection input is set to page scan, the Bluetooth device address of the scanning device shall be used as address input. When the sequence selection input is set to inquiry scan, the GIAC LAP and the four LSBs of the DCI (as A_{27-24}), shall be used as address input for the hopping sequence. For the transmitted access code and in the receiver correlator, the appropriate GIAC or DIAC shall be used. The application decides which inquiry access code to use depending on the purpose of the inquiry.

2.6.4.2 Page hopping sequence

When the sequence selection input is set to page, the paging device shall start using the **A**-train, i.e., $\{f(k-8), \ldots, f(k), \ldots, f(k+7)\}$, where $f(k)$ is the source's estimate of the current receiver frequency in the paged device. The index k is a function of all the inputs in Figure 2.16. There are 32 possible paging frequencies within each 1.28 second interval. Half of these frequencies belong to the **A**-train, the rest (i.e., $\{f(k+8), \ldots, f(k+15), f(k-16), \ldots, f(k-9)\}$) belong to the **B**-train. In order to achieve the -8 offset of the **A**-train, a constant of 24 shall be added to the clock bits (which is equivalent to -8 due to the modulo 32 operation). The **B**-train is obtained by setting the offset to 8. A cyclic shift of the order within the trains is also necessary in order to avoid a possible repetitive mismatch between the paging and scanning devices. Thus,

$$Xp = [CLKE_{16-12} + k_{offset} + (CLKE_{4-2,0} - CLKE_{16-12}) \bmod 16] \bmod 32, \quad \text{(EQ 2)}$$

where

$$k_{offset} = \begin{cases} 24 & \text{A-train,} \\ 8 & \text{B-train.} \end{cases} \quad \text{(EQ 3)}$$

Alternatively, each switch between the **A**- and **B**-trains may be accomplished by adding 16 to the current value of k_{offset} (originally initialized with 24).

2.6.4.3 Slave page response hopping sequence

When the sequence selection input is set to *slave page response,* in order to eliminate the possibility of losing the link due to discrepancies of the native clock CLKN and the master's clock estimate CLKE, the four bits $CLKN_{16-12}$ shall be frozen at their current value. The value shall be frozen at the content it has in the slot where the recipient's access code is detected. The native clock shall *not* be stopped; it is merely the values of the bits used for creating the X-input that are kept fixed for a while. A frozen value is denoted by an asterisk (*) in the discussion below.

For each response slot the paged device shall use an X-input value one larger (modulo 32) than in the preceding response slot. However, the first response shall be made with the X-input kept at the same value as it was when the access code was recognized. Let N be a counter starting at zero. Then, the X-input in the $(N+1)$-th response slot (the first response slot being the one immediately following the page slot now responding to) of the **slave response** substate is:

$$Xprs = [CLKN^*_{16-12} + N] \bmod 32, \quad \text{(EQ 4)}$$

The counter N shall be set to zero in the slot where the slave acknowledges the page (see Figure 8.3 on page 155 and Figure 8.4 on page 155). Then, the value of N shall be increased by one each time $CLKN_1$ is set to zero, which corresponds to the start of a master TX slot. The X-input shall be constructed this way until the first **FHS** packet is received *and* the immediately following response packet has been transmitted. After this the slave shall enter the **CONNECTION** state using the parameters received in the **FHS** packet.

2.6.4.4 Master page response hopping sequence

When the sequence selection input is set to *master page response*, the master shall freeze its estimated slave clock to the value that triggered a response from the paged device. It is equivalent to using the values of the clock estimate when receiving the slave response (since only $CLKE_1$ will differ from the corresponding page transmission). Thus, the values are frozen when the slave **ID** packet is received. In addition to the clock bits used, the current value of k_{offset} shall also be frozen. The master shall adjust its X-input in the same way the paged device does, i.e., by incrementing this value by one for each time $CLKE_1$ is set to zero. The first increment shall be done before sending the **FHS** packet to the paged device. Let N be a counter starting at one. The rule for forming the X-input is:

$$Xprm = [CLKE^*_{16-12} + k_{offset}{}^* + (CLKE^*_{4-2,0} - CLKE^*_{16-12}) \bmod 16 + N] \bmod 32, \quad \text{(EQ 5)}$$

The value of N shall be increased each time $CLKE_1$ is set to zero, which corresponds to the start of a master TX slot.

2.6.4.5 Inquiry hopping sequence

When the sequence selection input is set to *inquiry*, the X-input is similar to that used in the *page hopping sequence*. Since no particular device is addressed, the native clock CLKN of the inquirer shall be used. Moreover, which of the two train offsets to start with is of no real concern in this state. Consequently,

$$Xi = [CLKN_{16-12} + k_{offset} + (CLKN_{4-2,0} - CLKN_{16-12}) \bmod 16] \bmod 32, \quad \text{(EQ 6)}$$

where k_{offset} is defined by (EQ 3) on page 91. The initial choice of the offset is arbitrary.

The GIAC LAP and the four LSBs of the DCI (as A_{27-24}) shall be used as address input for the hopping sequence generator.

2.6.4.6 Inquiry response hopping sequence

The *inquiry response* hopping sequence is similar to the *slave page response* hopping sequence with respect to the X-input. The clock input shall not be frozen, thus the following equation apply:

$$Xir = [CLKN_{16-12} + N] \mod 32, \quad \text{(EQ 7)}$$

Furthermore, the counter N is increased not on $CLKN_1$ basis, but rather after each **FHS** packet has been transmitted in response to the inquiry. There is no restriction on the initial value of N as it is independent of the corresponding value in the inquiring unit.

The X_{ir} value used for the extended inquiry response packet shall be the same X_{ir} value as calculated for the immediately preceding FHS packet.

The GIAC LAP and the four LSBs of the DCI (as A_{27-24}) shall be used as address input for the hopping sequence generator. The other input bits to the generator shall be the same as for page response.

2.6.4.7 Basic and adapted channel hopping sequence

In the *basic* and *adapted channel hopping sequences*, the clock bits to use in the basic or adapted hopping sequence generation shall always be derived from the master clock, CLK. The address bits shall be derived from the Bluetooth device address of the master.

3 PHYSICAL LINKS

A physical link represents a baseband connection between devices. A physical link is always associated with exactly one physical channel. Physical links have common properties that apply to all logical transports on the physical link.

The common properties of physical links are:

- Power control (see Link Manager Protocol Section 4.1.3 on page 227)
- Link supervision (see Section 3.1 on page 94 and Link Manager Protocol Section 4.1.6 on page 236)
- Encryption (see Security [Part H] Section 4 on page 934 and Link Manager Protocol [Part C] Section 4.2.5 on page 252)
- Channel quality-driven data rate change (see Link Manager Protocol Section 4.1.7 on page 237)
- Multi-slot packet control (see Link Manager Protocol Section 4.1.10 on page 241)

3.1 LINK SUPERVISION

A connection can break down due to various reasons such as a device moving out of range, encountering severe interference or a power failure condition. Since this can happen without any prior warning, it is important to monitor the link on both the master and the slave side to avoid possible collisions when the logical transport address (see Section 4.2 on page 95) or parked member address (see Section 4.7.1 on page 103) is reassigned to another slave.

To be able to detect link loss, both the master and the slave shall use a link supervision timer, $T_{supervision}$. Upon reception of a valid packet header with one of the slave's addresses (see Section 4.2 on page 95) on the physical link, the timer shall be reset. If at any time in **CONNECTION** state, the timer reaches the *supervisionTO* value, the connection shall be considered disconnected. The same link supervision timer shall be used for SCO, eSCO, and ACL logical transports.

The timeout period, *supervisionTO*, is negotiated by the Link Manager. Its value shall be chosen so that the supervision timeout will be longer than hold and sniff periods. Link supervision of a parked slave shall be done by unparking and re-parking the slave.

4 LOGICAL TRANSPORTS

4.1 GENERAL

Between master and slave(s), different types of logical transports may be established. Five logical transports have been defined:

- Synchronous Connection-Oriented (SCO) logical transport
- Extended Synchronous Connection-Oriented (eSCO) logical transport
- Asynchronous Connection-Oriented (ACL) logical transport
- Active Slave Broadcast (ASB) logical transport
- Parked Slave Broadcast (PSB) logical transport

The synchronous logical transports are point-to-point logical transports between a master and a single slave in the piconet. The synchronous logical transports typically support time-bounded information like voice or general synchronous data. The master maintains the synchronous logical transports by using reserved slots at regular intervals. In addition to the reserved slots the eSCO logical transport may have a retransmission window after the reserved slots.

The ACL logical transport is also a point-to-point logical transport between the master and a slave. In the slots not reserved for synchronous logical transport(s), the master can establish an ACL logical transport on a per-slot basis to any slave, including the slave(s) already engaged in a synchronous logical transport.

The ASB logical transport is used by a master to communicate with active slaves. The PSB logical transport is used by a master to communicate with parked slaves.

4.2 LOGICAL TRANSPORT ADDRESS (LT_ADDR)

Each slave active in a piconet is assigned a primary 3-bit logical transport address (LT_ADDR). The all-zero LT_ADDR is reserved for broadcast messages. The master does not have an LT_ADDR. A master's timing relative to the slaves distinguishes it from the slaves. A secondary LT_ADDR is assigned to the slave for each eSCO logical transport in use in the piconet. Only eSCO traffic (i.e. NULL, POLL, and one of the EV packet types as negotiated at eSCO logical transport setup) may be sent on these LT_ADDRs. ACL traffic (including LMP) shall always be sent on the primary LT_ADDR. A slave shall only accept packets with matching primary or secondary LT_ADDR and broadcast packets. The LT_ADDR is carried in the packet header (see Section 6.4 on page 113). The LT_ADDR shall only be valid for as long as a slave is in the active mode. As soon as it is disconnected or parked, the slave shall lose all of its LT_ADDRs.

The primary LT_ADDR shall be assigned by the master to the slave when the slave is activated. This is either at connection establishment, or role switch, or when the slave is unparked. At connection establishment and at role switch, the primary LT_ADDR is carried in the **FHS** payload. When unparking, the primary LT_ADDR is carried in the unpark message.

4.3 SYNCHRONOUS LOGICAL TRANSPORTS

The first type of synchronous logical transport, the SCO logical transport, is a symmetric, point-to-point transport between the master and a specific slave. The SCO logical transport reserves slots and can therefore be considered as a circuit-switched connection between the master and the slave. The master may support up to three SCO links to the same slave or to different slaves. A slave may support up to three SCO links from the same master, or two SCO links if the links originate from different masters. SCO packets are never retransmitted.

The second type of synchronous logical transport, the eSCO logical transport, is a point-to-point logical transport between the master and a specific slave. eSCO logical transports may be symmetric or asymmetric. Similar to SCO, eSCO reserves slots and can therefore be considered a circuit-switched connection between the master and the slave. In addition to the reserved slots, eSCO supports a retransmission window immediately following the reserved slots. Together, the reserved slots and the retransmission window form the complete eSCO window.

4.4 ASYNCHRONOUS LOGICAL TRANSPORT

In the slots not reserved for synchronous logical transports, the master may exchange packets with any slave on a per-slot basis. The ACL logical transport provides a packet-switched connection between the master and all active slaves participating in the piconet. Both asynchronous and isochronous services are supported. Between a master and a slave only a single ACL logical transport shall exist. For most ACL packets, packet retransmission is applied to assure data integrity.

ACL packets not addressed to a specific slave are considered as broadcast packets and should be read by every slave. If there is no data to be sent on the ACL logical transport and no polling is required, no transmission is required.

4.5 TRANSMIT/RECEIVE ROUTINES

This section describes the way to use the packets as defined in Section 6 in order to support the traffic on the ACL, SCO and eSCO logical transports. Both single-slave and multi-slave configurations are considered. In addition, the use of buffers for the TX and RX routines are described.

The TX and RX routines described in sections 4.5.1 and 4.5.2 are informative only.

4.5.1 TX Routine

The TX routine is carried out separately for each asynchronous and synchronous logical transport. Figure 4.1 on page 97 shows the asynchronous and synchronous buffers as used in the TX routine. In this figure, only a single TX asynchronous buffer and a single TX synchronous buffer are shown. In the master, there is a separate TX asynchronous buffer for each slave. In addition there can be one or more TX synchronous buffers for each synchronous slave (different SCO or eSCO logical transports could either reuse the same TX synchronous buffer, or each have their own TX synchronous buffer). Each TX buffer consists of two FIFO registers: one **current** register which can be accessed and read by the Link Controller in order to compose the packets, and one **next** register that can be accessed by the Baseband Resource Manager to load new information. The positions of the switches S1 and S2 determine which register is current and which register is next; the switches are controlled by the Link Controller. The switches at the input and the output of the FIFO registers can never be connected to the same register simultaneously.

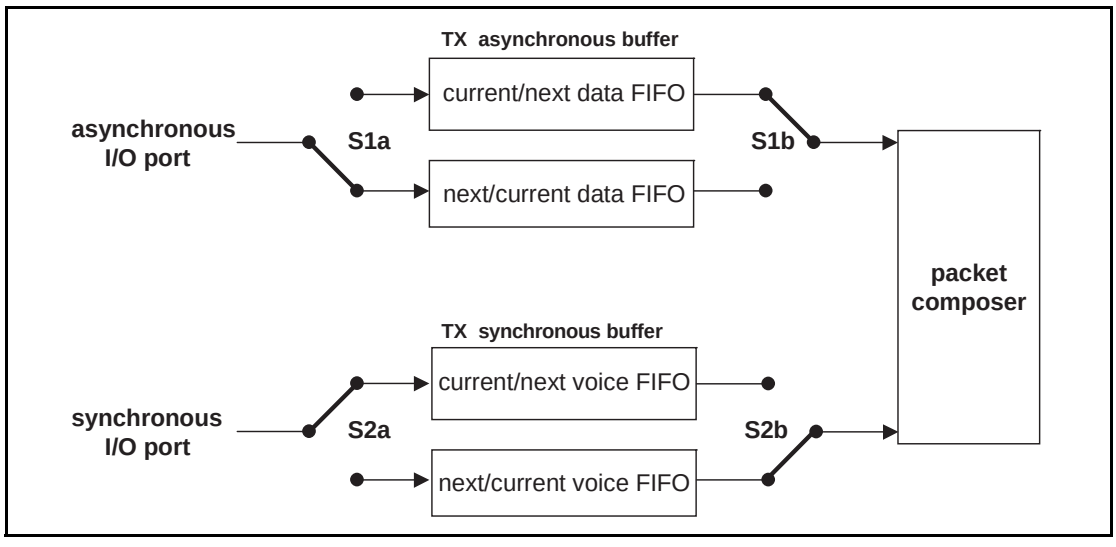

Figure 4.1: Functional diagram of TX buffering.

Of the packets common on the ACL and SCO logical transports (**NULL**, **POLL and DM1**) only the **DM1** packet carries a payload that is exchanged between the Link Controller and the Link Manager; this common packet makes use of the asynchronous buffer. All ACL packets make use of the asynchronous buf-

fer. All SCO and eSCO packets make use of the synchronous buffer except for the **DV** packet where the synchronous data part is handled by the synchronous buffer and the data part is handled by the asynchronous buffer. In the next sections, the operation for ACL traffic, SCO traffic, eSCO traffic, and combined data-voice traffic on the SCO logical transport are described.

4.5.1.1 ACL traffic

In the case of asynchronous data only the TX ACL buffer in Figure 4.1 on page 97 has to be considered. In this case, only packet types **DM** or **DH** are used, and these can have different lengths. The length is indicated in the payload header. The selection of **DM** or **DH** packets should depend on the quality of the link. See [Part C] Section 4.1.7 on page 237.

The default packet type in pure data traffic is **NULL** (see Section 6.5.1.2 on page 117). This means that, if there is no data to be sent (the data traffic is asynchronous, and therefore pauses occur in which no data is available) or no slaves need to be polled, **NULL** packets are sent instead – in order to send link control information to the other device (e.g. ACK/STOP information for received data). When no link control information is available (either no need to acknowledge and/or no need to stop the RX flow) no packet is sent at all.

The TX routine works as follows. The Baseband Resource Manager loads new data information in the register to which the switch S1a points. Next, it gives a command to the Link Controller, which forces the switch S1 to change (both S1a and S1b switch synchronously). When the payload needs to be sent, the packet composer reads the current register and, depending on the packet type, builds a payload which is appended to the channel access code and the header and is subsequently transmitted. In the response packet (which arrives in the following RX slot if it concerned a master transmission, or may be postponed until some later RX slot if it concerned a slave transmission), the result of the transmission is reported back. In case of an ACK, the switch S1 changes position; if a NAK (explicit or implicit) is received instead, the switch S1 will not change position. In that case, the same payload is retransmitted at the next TX occasion.

As long as the Baseband Resource Manager keeps loading the registers with new information, the Link Controller will automatically transmit the payload; in addition, retransmissions are performed automatically in case of errors. The Link Controller will send **NULL** or nothing when no new data is loaded. If no new data has been loaded in the **next** register, during the last transmission, the packet composer will be pointing to an empty register after the last transmission has been acknowledged and the **next** register becomes the **current** register. If new data is loaded in the **next** register, a **flush** command is required to switch the S1 switch to the proper register. As long as the Baseband Resource Manager keeps loading the data and type registers before each TX slot, the data is automatically processed by the Link Controller since the S1 switch is controlled by the ACK information received in response. However, if the traffic from the Baseband Resource Manager is interrupted once and a default packet is sent instead, a **flush** command is necessary to continue the flow in the Link Controller.

The **flush** command may also be used in case of time-bounded (isochronous) data. In case of a bad link, many retransmissions are necessary. In certain applications, the data is time-bounded: if a payload is retransmitted all the time because of link errors, it may become outdated, and the system might decide to continue with more recent data instead and skip the payload that does not come through. This is accomplished by the **flush** command as well. With the **flush**, the switch S1 is forced to change and the Link Controller is forced to consider the next data payload and overrules the ACK control. Any ACL type of packet can be used to send data or link control information to any other ACL slave.

4.5.1.2 SCO traffic

On the SCO logical transport only **HV** and **DV** packet types are used, See Section 6.5.2 on page 120. The synchronous port may continuously load the **next** register in the synchronous buffer. The S2 switches are changed according to the T_{sco} interval. This T_{sco} interval is negotiated between the master and the slave at the time the SCO logical transport is established.

For each new SCO slot, the packet composer reads the **current** register after which the S2 switch is changed. If the SCO slot has to be used to send control information with high priority concerning a control packet between the master and the SCO slave, or a control packet between the master and any other slave, the packet composer will discard the SCO information and use the control information instead. This control information shall be sent in a DM1 packet. Data or link control information may also be exchanged between the master and the SCO slave by using the **DV** or **DM1** packets.

4.5.1.3 Mixed data/voice traffic

In Section 6.5.2 on page 120, a **DV** packet has been defined that can support both data and voice simultaneously on a single SCO logical transport. When the TYPE is **DV**, the Link Controller reads the data register to fill the data field and the voice register to fill the voice field. Thereafter, the switch S2 is changed. However, the position of S1 depends on the result of the transmission as on the ACL logical transport: only if an ACK has been received will the S1 switch change its position. In each **DV** packet, the voice information is new, but the data information might be retransmitted if the previous transmission failed. If there is no data to be sent, the SCO logical transport will automatically change from **DV** packet type to the current **HV** packet type used before the mixed data/voice transmission. Note that a **flush** command is necessary when the data stream has been interrupted and new data has arrived.

Combined data-voice transmission can also be accomplished by using a separate ACL logical transport in addition to the SCO logical transport(s) if channel capacity permits this.

4.5.1.4 eSCO Traffic

On the eSCO logical transport only **EV**, **POLL** and **NULL** packet types are used, see Section 6.5.3 on page 121. The synchronous port may continuously load the next register in the synchronous buffer. The S2 switches are changed according to the T_{eSCO} interval. This T_{eSCO} interval is negotiated between the master and the slave at the time the eSCO logical transport is established.

For each new eSCO slot, the packet composer reads the current register after which the S2 switch is changed. If the eSCO slot has to be used to send control information with high priority concerning a control packet between the master and the eSCO slave, or an ACL packet between the master and any other slave, the packet composer will discard the eSCO information and use the control information instead. Control information to the eSCO slave is sent in a DM1 packet on the primary LT_ADDR.

4.5.1.5 Default packet types

On the ACL links, the default type is always **NULL** both for the master and the slave. This means that if no user information needs to be sent, either a **NULL** packet is sent if there is **ACK** or **STOP** information, or no packet is sent at all. The **NULL** packet can be used by the master to allocate the next slave-to-master slot to a certain slave (namely the one addressed). However, the slave is not forced to respond to the **NULL** packet from the master. If the master requires a response, it sends a **POLL** packet.

The SCO and eSCO packet types are negotiated at the LM level when the SCO or eSCO logical transport is established. The agreed packet type is also the default packet type for the reserved SCO or eSCO slots.

4.5.2 RX Routine

The RX routine is carried out separately for the ACL logical transport and the synchronous logical transports. However, in contrast to the master TX asynchronous buffer, a single RX buffer is shared among all slaves. For the synchronous buffer, how the different synchronous logical transports are distinguished depends on whether extra synchronous buffers are required or not. Figure 4.2 on page 101 shows the asynchronous and synchronous buffers as used in the RX routine. The RX asynchronous buffer consists of two FIFO registers: one register that can be accessed and loaded by the Link Controller with the payload of the latest RX packet, and one register that can be accessed by the Baseband Resource Manager to read the previous payload. The RX synchronous buffer also consists of two FIFO registers: one register which is filled with newly arrived voice information, and one register which can be read by the voice processing unit.

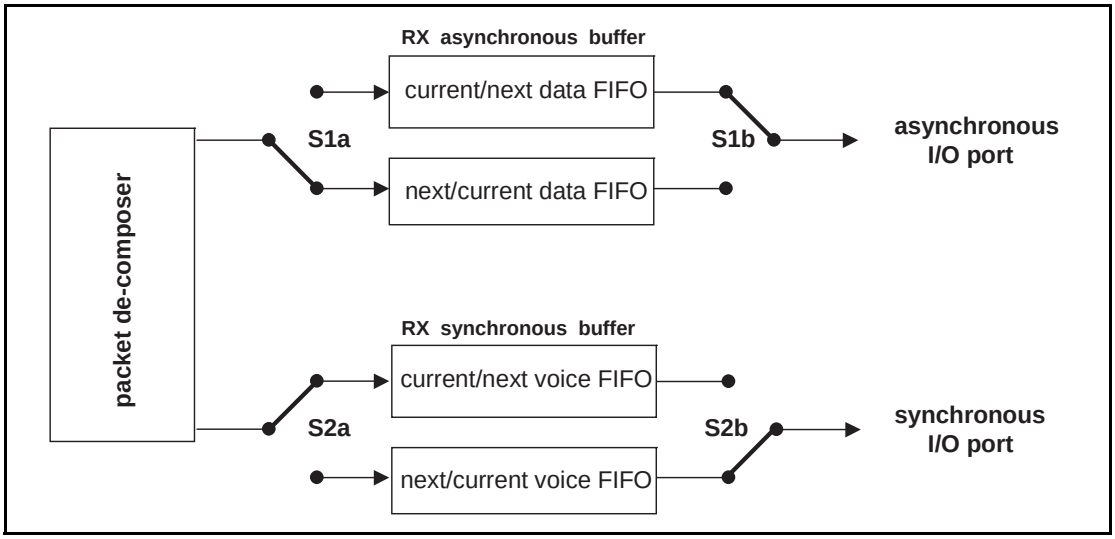

Figure 4.2: Functional diagram of RX buffering

Since the TYPE indication in the header (see Section 6.4.2 on page 113) of the received packet indicates whether the payload contains data and/or voice, the packet de-composer can automatically direct the traffic to the proper buffers. The switch S1 changes every time the Baseband Resource Manager reads the old register. If the next payload arrives before the RX register is emptied, a STOP indication is included in the packet header of the next TX packet that is returned. The STOP indication is removed again as soon as the RX register is emptied. The SEQN field is checked before a new ACL payload is stored into the asynchronous register (flush indication in LLID and broadcast messages influence the interpretation of the SEQN field see Section 7.6 on page 139).

The S2 switch is changed every T_{SCO} or T_{eSCO} for SCO and eSCO respectively. If, due to errors in the header, no new synchronous payload arrives, the switch still changes. The synchronous data processing unit then processes the synchronous data to account for the missing parts.

4.5.3 Flow Control

Since the RX ACL buffer can be full while a new payload arrives, flow control is required. The header field FLOW in the return TX packet may use STOP or GO in order to control the transmission of new data.

4.5.3.1 Destination control

As long as data can not be received, a STOP indication shall be transmitted which is automatically inserted by the Link Controller into the header of the return packet. STOP shall be returned as long as the RX ACL buffer is not emptied by the Baseband Resource Manager. When new data can be accepted again, the GO indication shall be returned. GO shall be the default value. All packet types not including data can still be received. Voice communication for example is not affected by the flow control. Although a device can not receive new information, it may still continue to transmit information: the flow control shall be separate for each direction.

4.5.3.2 Source control

On the reception of a STOP signal, the Link Controller shall automatically switch to the default packet type. The ACL packet transmitted just before the reception of the STOP indication shall be kept until a GO signal is received. It may be retransmitted as soon as a GO indication is received. Only default packets shall be sent as long as the STOP indication is received. When no packet is received, GO shall be assumed implicitly. Note that the default packets contain link control information (in the header) for the receive direction (which may still be open) and may contain synchronous data (**HV** or **EV** packets). When a GO indication is received, the Link Controller may resume transmitting the data that is present in the TX ACL buffers.

In a multi-slave configuration, only the transmission to the slave that issued the STOP signal shall be stalled. This means that the master shall only stop transmission from the TX ACL buffer corresponding to the slave that momentarily cannot accept data.

4.6 ACTIVE SLAVE BROADCAST TRANSPORT

The active slave broadcast logical transport is used to transport L2CAP user traffic to all devices in the piconet that are currently connected to the piconet physical channel that is used by the ASB. There is no acknowledgement protocol and the traffic is uni-directional from the piconet master to the slaves. The ASB logical transport may only be used for L2CAP group traffic and shall never be used for L2CAP connection-oriented channels, L2CAP control signaling or LMP control signaling.

The ASB logical transport is unreliable. To improve reliability somewhat each packet is transmitted a number of times. An identical sequence number is used to assist with filtering retransmissions at the slave device.

The ASB logical transport is identified by the reserved, all-zero, LT_ADDR. Packets on the ASB logical transport may be sent by the master at any time.

4.7 PARKED SLAVE BROADCAST TRANSPORT

The parked slave broadcast logical transport is used for communication from the master to the slaves that are parked. The PSB logical transport is more complex than the other logical transports as it consists of a number of phases, each having a different purpose. These phases are the control information phase (used to carry the LMP logical link), the user information phase (used to carry the L2CAP logical link), and the access phase (carrying baseband signaling).

The PSB logical transport is identified by the reserved, all-zero, LT_ADDR.

4.7.1 Parked Member Address (PM_ADDR)

A slave in the **PARK** state can be identified by its BD_ADDR or by a dedicated parked member address (PM_ADDR). This latter address is an 8-bit member address that separates the parked slaves. The PM_ADDR shall only be valid as long as the slave is parked. When the slave is activated it shall be assigned an LT_ADDR but shall lose the PM_ADDR. The PM_ADDR is assigned to the slave by the master during the parking procedure (see [Part C] Section 4.5.2 on page 283).

The all-zero PM_ADDR shall be reserved for parked slaves that only use their BD_ADDR to be unparked.

4.7.2 Access Request Address (AR_ADDR)

The access request address (AR_ADDR) is used by the parked slave to determine the slave-to-master half slot in the access window where it is allowed to send access request messages, see also Section 8.9.6 on page 188. The AR_ADDR shall be assigned to the slave when it enters the **PARK** state and shall only be valid as long as the slave is parked. The AR_ADDR is not necessarily unique; i.e. different parked slaves may have the same AR_ADDR.

5 LOGICAL LINKS

Five logical links are defined:

- Link Control (LC)
- ACL Control (ACL-C)
- User Asynchronous/Isochronous (ACL-U)
- User Synchronous (SCO-S)
- User Extended Synchronous (eSCO-S)

The control logical links LC and ACL-C are used at the link control level and link manager level, respectively. The ACL-U logical link is used to carry either asynchronous or isochronous user information. The SCO-S, and eSCO-S logical links are used to carry synchronous user information. The LC logical link is carried in the packet header, all other logical links are carried in the packet payload. The ACL-C and ACL-U logical links are indicated in the logical link ID, LLID, field in the payload header. The SCO-S and eSCO-S logical links are carried by the synchronous logical transports only; the ACL-U link is normally carried by the ACL logical transport; however, it may also be carried by the data in the DV packet on the SCO logical transport. The ACL-C link may be carried either by the SCO or the ACL logical transport.

5.1 LINK CONTROL LOGICAL LINK (LC)

The LC control logical link shall be mapped onto the packet header. This logical link carries low level link control information like ARQ, flow control, and payload characterization. The LC logical link is carried in every packet except in the **ID** packet which does not have packet header.

5.2 ACL CONTROL LOGICAL LINK (ACL-C)

The ACL-C logical link shall carry control information exchanged between the link managers of the master and the slave(s). The ACL-C logical link shall use DM1or DV packets. DV packets shall only be used on the ACL-C link if the ACL-C message is less than or equal to 9 bytes and an HV1 synchronous logical transport is in use. The ACL-C logical link is indicated by the LLID code 11 in the payload header.

5.3 USER ASYNCHRONOUS/ISOCHRONOUS LOGICAL LINK (ACL-U)

The ACL-U logical link shall carry L2CAP asynchronous and isochronous user data. These messages may be transmitted in one or more baseband packets. For fragmented messages, the start packet shall use an LLID code of 10 in the payload header. Remaining continuation packets shall use LLID code 01. If there is no fragmentation, all packets shall use the LLID start code 10.

5.3.1 Pausing the ACL-U logical link

When paused by LM, the Link Controller transmits the current packet with ACL-U information, if any, until an ACK is received or, optionally, until an explicit NACK is received. While the ACL-U logical link is paused, the Link Controller shall not transmit any packets with ACL-U logical link information.

If the ACL-U was paused after an ACK, the next sequence number shall be used on the next packet. If the ACL-U was paused after a NAK, the same sequence number shall be used on the next packet and the un-acknowledged packet shall be transmitted once the ACL-U logical link is un-paused.

When the ACL-U logical link is un-paused by LM, the Link Controller may resume transmitting packets with ACL-U information.

5.4 USER SYNCHRONOUS DATA LOGICAL LINK (SCO-S)

The SCO-S logical link carries transparent synchronous user data. This logical link is carried over the synchronous logical transport SCO.

5.5 USER EXTENDED SYNCHRONOUS DATA LOGICAL LINK (eSCO-S)

The eSCO-S logical link also carries transparent synchronous user data. This logical link is carried over the extended synchronous logical transport eSCO.

5.6 LOGICAL LINK PRIORITIES

The ACL-C logical link shall have a higher priority than the ACL-U logical link when scheduling traffic on the shared ACL logical transport, except in the case when retransmissions of unacknowledged ACL packets shall be given priority over traffic on the ACL-C logical link. The ACL-C logical link should also have priority over traffic on the SCO-S and eSCO-S logical links but opportunities for interleaving the logical links should be taken.

6 PACKETS

Bluetooth devices shall use the packets as defined in the following sections.

6.1 GENERAL FORMAT

6.1.1 Basic Rate

The general packet format of Basic Rate packets is shown in Figure 6.1 on page 106. Each packet consists of 3 entities: the access code, the header, and the payload. In the figure, the number of bits per entity is indicated.

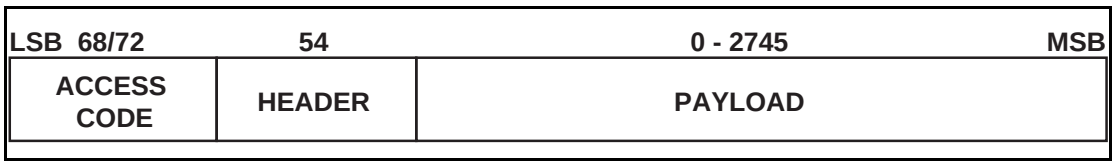

Figure 6.1: General Basic Rate packet format.

The access code is 72 or 68 bits and the header is 54 bits. The payload ranges from zero to a maximum of 2745 bits. Different packet types have been defined. Packet may consist of:

- the shortened access code only (see ID packet on page 116)
- the access code and the packet header
- the access code, the packet header and the payload.

6.1.2 Enhanced Data Rate

The general format of Enhanced Data Rate packets is shown in Figure 6.2 on page 106. The access code and packet header are identical in format and modulation to Basic Rate packets. Enhanced Data Rate packets have a guard time and synchronization sequence following the packet header. Following the payload are two trailer symbols. The guard time, synchronization sequence and trailer are defined in section 6.6.

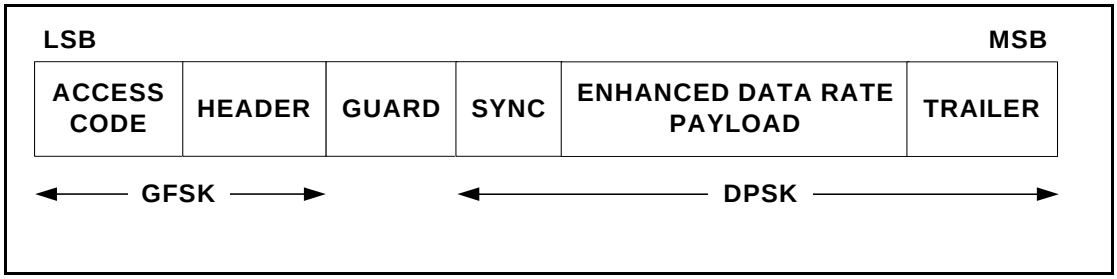

Figure 6.2: General enhanced data rate packet format

6.2 BIT ORDERING

The bit ordering when defining packets and messages in the *Baseband Specification*, follows the *Little Endian* format. The following rules apply:

- The *least significant bit* (LSB) corresponds to b_0;
- The LSB is the first bit sent over the air;
- In illustrations, the LSB is shown on the left side;

Furthermore, data fields generated internally at baseband level, such as the packet header fields and payload header length, shall be transmitted with the LSB first. For instance, a 3-bit parameter X=3 is sent as:

$$b_0 b_1 b_2 = 110$$

over the air where 1 is sent first and 0 is sent last.

6.3 ACCESS CODE

Every packet starts with an access code. If a packet header follows, the access code is 72 bits long, otherwise the access code is 68 bits long and is known as a shortened access code. The shortened access code does not contain a trailer. This access code is used for synchronization, DC offset compensation and identification. The access code identifies all packets exchanged on a physical channel: all packets sent in the same physical channel are preceded by the same access code. In the receiver of the device, a sliding correlator correlates against the access code and triggers when a threshold is exceeded. This trigger signal is used to determine the receive timing.

The shortened access code is used in paging, inquiry, and park. In this case, the access code itself is used as a signaling message and neither a header nor a payload is present.

The access code consists of a preamble, a sync word, and possibly a trailer, see Figure 6.3 on page 108. For details see Section 6.3.1 on page 108.

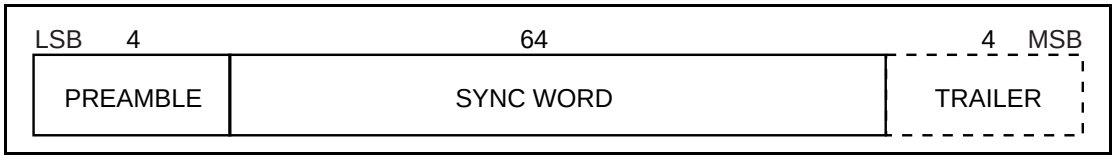

Figure 6.3: Access code format

6.3.1 Access Code Types

The different access code types use different Lower Address Parts (LAPs) to construct the sync word. The LAP field of the BD_ADDR is explained in Section 1.2 on page 66. A summary of the different access code types is in Table 6.1 on page 108.

Code type	LAP	Code length	Comments
CAC	Master	72	See also Section 1.3 on page 67
DAC	Paged device	68/72[1]	
GIAC	Reserved	68/72*	
DIAC	Dedicated	68/72*	

Table 6.1: Summary of access code types.

1. length 72 is only used in combination with FHS packets

The CAC consists of a **preamble**, **sync word**, and **trailer** and its total length is 72 bits. When used as self-contained messages without a header, the DAC and IAC do not include the trailer bits and are of length 68 bits.

6.3.2 Preamble

The preamble is a fixed zero-one pattern of 4 symbols used to facilitate DC compensation. The sequence is either 1010 or 0101, depending on whether the LSB of the following sync word is 1 or 0, respectively. The preamble is shown in Figure 6.4 on page 109.

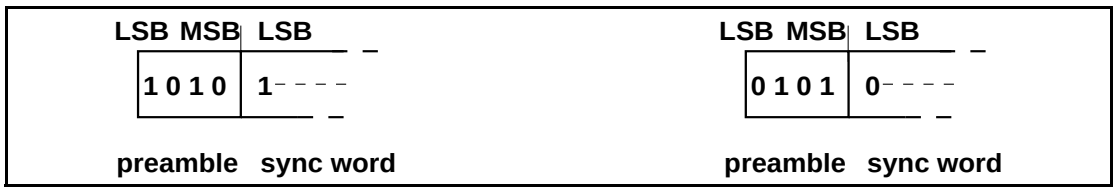

Figure 6.4: Preamble

6.3.3 Sync Word

The sync word is a 64-bit code word derived from a 24 bit address (LAP); for the CAC the master's LAP is used; for the GIAC and the DIAC, reserved, dedicated LAPs are used; for the DAC, the slave LAP is used. The construction guarantees large Hamming distance between sync words based on different LAPs. In addition, the good auto correlation properties of the sync word improve timing acquisition.

6.3.3.1 Synchronization word definition

The sync words are based on a (64,30) expurgated block code with an overlay (bit-wise XOR) of a 64 bit full length pseudo-random noise (PN) sequence. The expurgated code guarantees large Hamming distance ($d_{min} = 14$) between sync words based on different addresses. The PN sequence improves the auto correlation properties of the access code. The following steps describe how the sync word shall be generated:

1. Generate information sequence;
2. XOR this with the "information covering" part of the PN overlay sequence;
3. Generate the codeword;
4. XOR the codeword with all 64 bits of the PN overlay sequence;

The information sequence is generated by appending 6 bits to the 24 bit LAP (step 1). The appended bits are 001101 if the MSB of the LAP equals 0. If the MSB of the LAP is 1 the appended bits are 110010. The LAP MSB together with the appended bits constitute a length-seven Barker sequence. The purpose of including a Barker sequence is to further improve the auto correlation properties. In step 2 the information is pre-scrambled by XORing it with the bits $p_{34} \cdots p_{63}$ of the PN sequence (defined in Section 6.3.3.2 on page 112). After generating the codeword (step 3), the complete PN sequence is XORed to the

codeword (step 4). This step de-scrambles the information part of the codeword. At the same time the parity bits of the codeword are scrambled. Consequently, the original LAP and Barker sequence are ensured a role as a part of the access code sync word, and the cyclic properties of the underlying code is removed. The principle is depicted in Figure 6.5 on page 110.

In the following discussion, binary sequences will be denoted by their corresponding D-transform (in which D^i represents a delay of *i* time units). Let $p'(D) = p'_0 + p'_1 D + \ldots + p'_{62} D^{62}$ be the 63 bit PN sequence, where p'_0 is the first bit (LSB) leaving the PRNG (see Figure 6.6 on page 112), and, p'_{62} is the last bit (MSB). To obtain 64 bits, an extra zero is appended at the *end* of this sequence (thus, $p'(D)$ is unchanged). For notational convenience, the reciprocal of this extended polynomial, $p(D) = D^{63} p'(1/D)$, will be used in the following discussion. This is the sequence $p'(D)$ in reverse order. We denote the 24 bit lower address part (LAP) of the Bluetooth device address by $a(D) = a_0 + a_1 D + \ldots + a_{23} D^{23}$ (a_0 is the LSB of the Bluetooth device address).

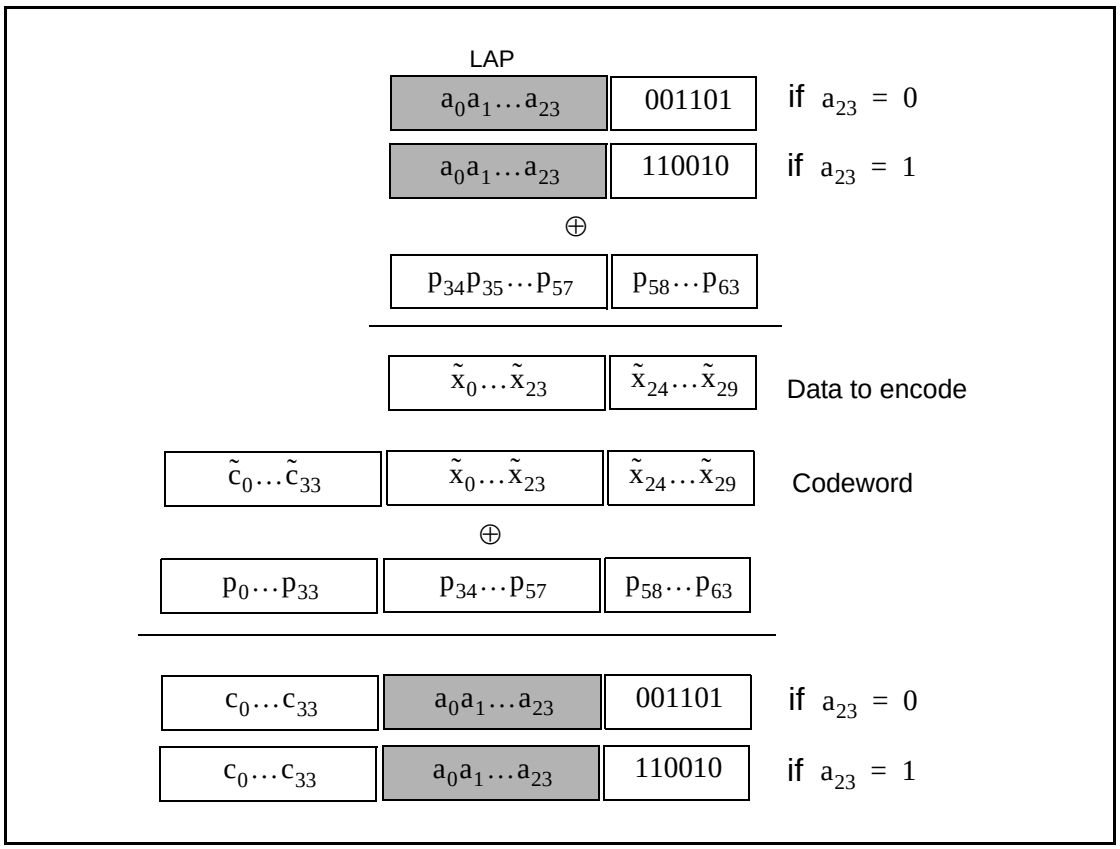

Figure 6.5: Construction of the sync word.

The (64,30) block code generator polynomial is denoted $g(D) = (1 + D)g'(D)$, where $g'(D)$ is the generator polynomial 157464165547 (octal notation) of a primitive binary (63,30) BCH code. Thus, in octal notation *g(D)* is

$$g(D) = 260534236651, \quad \text{(EQ 8)}$$

the left-most bit corresponds to the high-order (g_{34}) coefficient. The DC-free four bit sequences `0101` and `1010` can be written

$$\begin{cases} F_0(D) = D + D^3, \\ F_1(D) = 1 + D^2, \end{cases} \quad \text{(EQ 9)}$$

respectively. Furthermore,

$$\begin{cases} B_0(D) = D^2 + D^3 + D^5, \\ B_1(D) = 1 + D + D^4, \end{cases} \quad \text{(EQ 10)}$$

which are used to create the length seven Barker sequences. Then, the access code shall be generated by the following procedure:

1. Format the 30 information bits to encode:

$$x(D) = a(D) + D^{24}B_{a_{23}}(D).$$

2. Add the information covering part of the PN overlay sequence:

$$\tilde{x}(D) = x(D) + p_{34} + p_{35}D + \ldots + p_{63}D^{29}.$$

3. Generate parity bits of the (64,30) expurgated block code:[1]

$$\tilde{c}(D) = D^{34}\tilde{x}(D) \mod g(D).$$

4. Create the codeword:

$$\tilde{s}(D) = D^{34}\tilde{x}(D) + \tilde{c}(D).$$

5. Add the PN sequence:

$$s(D) = \tilde{s}(D) + p(D).$$

6. Append the (DC-free) preamble and trailer:

$$y(D) = F_{c_0}(D) + D^4 s(D) + D^{68}F_{a_{23}}(D).$$

1. *x*(*D*) mod *y*(*D*) denotes the remainder when *x*(*D*) is divided by *y*(*D*).

6.3.3.2 Pseudo-random noise sequence generation

To generate the PN sequence the primitive polynomial $h(D) = 1 + D + D^3 + D^4 + D^6$ shall be used. The LFSR and its starting state are shown in Figure 6.6 on page 112. The PN sequence generated (including the extra terminating zero) becomes (hexadecimal notation) 83848D96BBCC54FC. The LFSR output starts with the left-most bit of this PN sequence. This corresponds to $p'(D)$ of the previous section. Thus, using the reciprocal $p(D)$ as overlay gives the 64 bit sequence:

$$\mathbf{p} = 3F2A33DD69B121C1, \quad \text{(EQ 11)}$$

where the left-most bit is $p_0 = 0$ (there are two initial zeros in the binary representation of the hexadecimal digit 3), and $p_{63} = 1$ is the right-most bit.

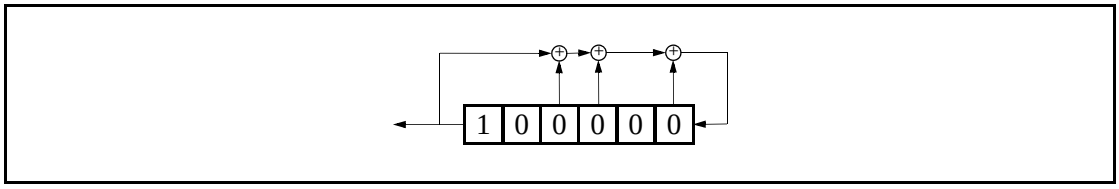

Figure 6.6: LFSR and the starting state to generate $p'(D)$.

6.3.4 Trailer

The trailer is appended to the sync word as soon as the packet header follows the access code. This is typically the case with the CAC, but the trailer is also used in the DAC and IAC when these codes are used in FHS packets exchanged during page response and inquiry response.

The trailer is a fixed zero-one pattern of four symbols. The trailer together with the three MSBs of the syncword form a 7-bit pattern of alternating ones and zeroes which can be used for extended DC compensation. The trailer sequence is either 1010 or 0101 depending on whether the MSB of the sync word is 0 or 1, respectively. The choice of trailer is illustrated in Figure 6.7 on page 112.

Figure 6.7: Trailer in CAC when MSB of sync word is 0 (a), and when MSB of sync word is 1 (b).

6.4 PACKET HEADER

The header contains link control (LC) information and consists of 6 fields:

- LT_ADDR: 3-bit logical transport address
- TYPE: 4-bit type code
- FLOW: 1-bit flow control
- ARQN: 1-bit acknowledge indication
- SEQN: 1-bit sequence number
- HEC: 8-bit header error check

The total header, including the HEC, consists of 18 bits, see Figure 6.8 on page 113, and is encoded with a rate 1/3 FEC (not shown but described in Section 7.4 on page 137) resulting in a 54-bit header. The LT_ADDR and TYPE fields shall be sent LSB first.

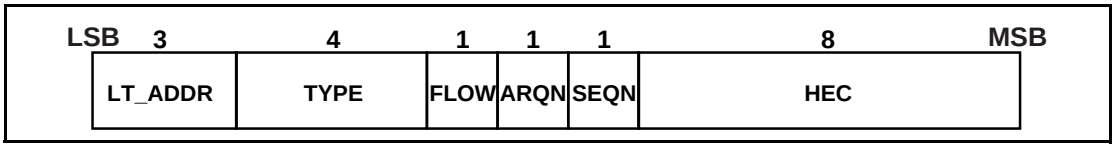

Figure 6.8: Header format.

6.4.1 LT_ADDR

The 3-bit LT_ADDR field contains the logical transport address for the packet (see Section 4.2 on page 95). This field indicates the destination slave for a packet in a master-to-slave transmission slot and indicates the source slave for a slave-to-master transmission slot.

6.4.2 TYPE

Sixteen different types of packets can be distinguished. The 4-bit TYPE code specifies which packet type is used. The interpretation of the TYPE code depends on the logical transport address in the packet. First, it shall be determined whether the packet is sent on an SCO logical transport, an eSCO logical transport, or an ACL logical transport. Second, it shall be determined whether Enhanced Data Rate has been enabled for the logical transport (ACL or eSCO) indicated by LT_ADDR. It can then be determined which type of SCO packet, eSCO packet, or ACL packet has been received. The TYPE code determines how many slots the current packet will occupy (see the slot occupancy column in Table 6.2 on page 116). This allows the non-addressed receivers to refrain from listening to the channel for the duration of the remaining slots. In Section 6.5 on page 115, each packet type is described in more detail.

6.4.3 FLOW

The FLOW bit is used for flow control of packets over the ACL logical transport. When the RX buffer for the ACL logical transport in the recipient is full, a STOP indication (FLOW=0) shall be returned to stop the other device from transmitting data temporarily. The STOP signal only affects ACL packets. Packets including only link control information (ID, POLL, and NULL packets), SCO packets or eSCO packets can still be received. When the RX buffer can accept data, a GO indication (FLOW=1) shall be returned. When no packet is received, or the received header is in error, a GO shall be assumed implicitly. In this case, the slave can receive a new packet with CRC although its RX buffer is still not emptied. The slave shall then return a NAK in response to this packet even if the packet passed the CRC check.

The FLOW bit is not used on the eSCO logical transport or the ACL-C logical link and shall be set to one on transmission and ignored upon receipt.

6.4.4 ARQN

The 1-bit acknowledgment indication ARQN is used to inform the source of a successful transfer of payload data with CRC, and can be positive acknowledge ACK or negative acknowledge NAK. See Section 7.6 on page 139 for initialization and usage of this bit.

6.4.5 SEQN

The SEQN bit provides a sequential numbering scheme to order the data packet stream. See Section 7.6.2 on page 142 for initialization and usage of the SEQN bit. For broadcast packets, a modified sequencing method is used, see Section 7.6.5 on page 146.

6.4.6 HEC

Each header has a header-error-check to check the header integrity. The HEC is an 8-bit word (generation of the HEC is specified in Section 7.1.1 on page 133). Before generating the HEC, the HEC generator is initialized with an 8-bit value. For FHS packets sent in **master response** substate, the slave upper address part (UAP) shall be used. For FHS packets and extended inquiry response packets sent in **inquiry response**, the default check initialization (DCI, see Section 1.2.1 on page 66) shall be used. In all other cases, the UAP of the master device shall be used.

After the initialization, a HEC shall be calculated for the 10 header bits. Before checking the HEC, the receiver shall initialize the HEC check circuitry with the proper 8-bit UAP (or DCI). If the HEC does not check, the entire packet shall be discarded. More information can be found in Section 7.1 on page 133.

6.5 PACKET TYPES

The packets used on the piconet are related to the logical transports they are used in. Three logical transports with distinct packet types are defined (see Section 4 on page 95): the SCO logical transport, the eSCO logical transport, and the ACL logical transport. For each of these logical transports, 15 different packet types can be defined.

To indicate the different packets on a logical transport, the 4-bit TYPE code is used. The packet types are divided into four segments. The first segment is reserved for control packets. All control packets occupy a single time slot. The second segment is reserved for packets occupying a single time slot. The third segment is reserved for packets occupying three time slots. The fourth segment is reserved for packets occupying five time slots. The slot occupancy is reflected in the segmentation and can directly be derived from the type code. Table 6.2 on page 116 summarizes the packets defined for the SCO, eSCO, and ACL logical transport types.

All packet types with a payload shall use GFSK modulation unless specified otherwise in the following sections.

ACL logical transports Enhanced Data Rate packet types are explicitly selected via LMP using the *packet_type_table* (ptt) parameter. eSCO Enhanced Data Rate packet types are selected when the eSCO logical transport is established.

.

Segment	TYPE code $b_3b_2b_1b_0$	Slot occupancy	SCO logical transport (1 Mbps)	eSCO logical transport (1 Mbps)	eSCO logical transport (2-3 Mbps)	ACL logical transport (1 Mbps) ptt=0	ACL logical transport (2-3 Mbps) ptt=1
1	0000	1	NULL	NULL	NULL	NULL	NULL
	0001	1	POLL	POLL	POLL	POLL	POLL
	0010	1	FHS	reserved	reserved	FHS	FHS
	0011	1	DM1	reserved	reserved	DM1	DM1
2	0100	1	undefined	undefined	undefined	DH1	2-DH1
	0101	1	HV1	undefined	undefined	undefined	undefined
	0110	1	HV2	undefined	2-EV3	undefined	undefined
	0111	1	HV3	EV3	3-EV3	undefined	undefined
	1000	1	DV	undefined	undefined	undefined	3-DH1
	1001	1	undefined	undefined	undefined	AUX1	AUX1
3	1010	3	undefined	undefined	undefined	DM3	2-DH3
	1011	3	undefined	undefined	undefined	DH3	3-DH3
	1100	3	undefined	EV4	2-EV5	undefined	undefined
	1101	3	undefined	EV5	3-EV5	undefined	undefined
4	1110	5	undefined	undefined	undefined	DM5	2-DH5
	1111	5	undefined	undefined	undefined	DH5	3-DH5

Table 6.2: Packets defined for synchronous and asynchronous logical transport types.

6.5.1 Common Packet Types

There are five common kinds of packets. In addition to the types listed in segment 1 of the previous table, the ID packet is also a common packet type but is not listed in segment 1 because it does not have a packet header.

6.5.1.1 ID packet

The identity or ID packet consists of the device access code (DAC) or inquiry access code (IAC). It has a fixed length of 68 bits. It is a very robust packet since the receiver uses a bit correlator to match the received packet to the known bit sequence of the ID packet.

6.5.1.2 NULL packet

The NULL packet has no payload and consists of the channel access code and packet header only. Its total (fixed) length is 126 bits. The NULL packet may be used to return link information to the source regarding the success of the previous transmission (ARQN), or the status of the RX buffer (FLOW). The NULL packet may not have to be acknowledged.

6.5.1.3 POLL packet

The POLL packet is very similar to the NULL packet. It does not have a payload. In contrast to the NULL packet, it requires a confirmation from the recipient. It is not a part of the ARQ scheme. The POLL packet does not affect the ARQN and SEQN fields. Upon reception of a POLL packet the slave shall respond with a packet even when the slave does not have any information to send unless the slave has scatternet commitments in that timeslot. This return packet is an implicit acknowledgement of the POLL packet. This packet can be used by the master in a piconet to poll the slaves. Slaves shall not transmit the POLL packet.

6.5.1.4 FHS packet

The FHS packet is a special control packet containing, among other things, the Bluetooth device address and the clock of the sender. The payload contains 144 information bits plus a 16-bit CRC code. The payload is coded with a rate 2/3 FEC with a gross payload length of 240 bits.

Figure 6.9 on page 117 illustrates the format and contents of the FHS payload. The payload consists of eleven fields. The FHS packet is used in page master response, inquiry response and in role switch.

The FHS packet contains real-time clock information. This clock information shall be updated before each retransmission. The retransmission of the FHS payload is different than retransmissions of ordinary data payloads where the same payload is used for each retransmission. The FHS packet is used for frequency hop synchronization before the piconet channel has been established, or when an existing piconet changes to a new piconet.

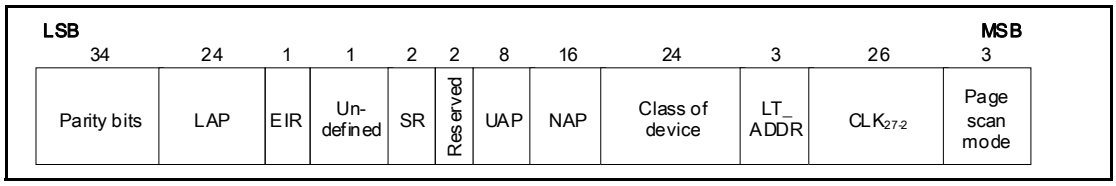

Figure 6.9: Format of the FHS payload.

Each field is described in more detail below:

Parity bits	This 34-bit field contains the parity bits that form the first part of the sync word of the access code of the device that sends the FHS packet. These bits are derived from the LAP as described in Section 1.2 on page 66.
LAP	This 24-bit field shall contain the lower address part of the device that sends the FHS packet.
EIR	This bit shall indicate that an extended inquiry response packet may follow. See Section 8.4.3 on page 161.
Undefined	This 1-bit field is reserved for future use and shall be set to zero.
SR	This 2-bit field is the scan repetition field and indicates the interval between two consecutive page scan windows, see also Table 6.4 and Table 8.1 on page 150
Reserved	This 2-bit field shall be set to 10.
UAP	This 8-bit field shall contain the upper address part of the device that sends the FHS packet.
NAP	This 16-bit field shall contain the non-significant address part of the device that sends the FHS packet (see also Section 1.2 on page 66 for LAP, UAP, and NAP).
Class of device	This 24-bit field shall contain the class of device of the device that sends the FHS packet. The field is defined in Bluetooth Assigned Numbers.
LT_ADDR	This 3-bit field shall contain the logical transport address the recipient shall use if the FHS packet is used at connection setup or role switch. A slave responding to a master or a device responding to an inquiry request message shall include an all-zero LT_ADDR field if it sends the FHS packet.
CLK_{27-2}	This 26-bit field shall contain the value of the native clock of the device that sends the FHS packet, sampled at the beginning of the transmission of the access code of this FHS packet. This clock value has a resolution of 1.25ms (two-slot interval). For each new transmission, this field is updated so that it accurately reflects the real-time clock value.
Page scan mode	This 3-bit field shall indicate which scan mode is used by default by the sender of the FHS packet. The interpretation of the page scan mode is illustrated in Table 6.5.

Table 6.3: Description of the FHS payload

The device sending the FHS shall set the SR bits according to Table 6.4.

SR bit format b_1b_0	SR mode
00	R0
01	R1
10	R2
11	reserved

Table 6.4: Contents of SR field

The device sending the FHS shall set the page scan mode bits according to Table 6.5.

Bit format $b_2b_1b_0$	Page scan mode
000	Mandatory scan mode
001	Reserved for future use
010	Reserved for future use
011	Reserved for future use
100	Reserved for future use
101	Reserved for future use
110	Reserved for future use
111	Reserved for future use

Table 6.5: Contents of page scan mode field

The LAP, UAP, and NAP together form the 48-bit Bluetooth Device Address of the device that sends the FHS packet. Using the parity bits and the LAP, the recipient can directly construct the channel access code of the sender of the FHS packet.

When initializing the HEC and CRC for the FHS packet of inquiry response, the UAP shall be the DCI.

6.5.1.5 DM1 packet

DM1 is part of segment 1 in order to support control messages in any logical transport that allows the DM1 packet (see Table 6.2 on page 116). However, it may also carry regular user data. Since the DM1 packet can be regarded as an ACL packet, it will be discussed in Section 6.5.4 on page 123.

6.5.2 SCO Packets

HV and DV packets are used on the synchronous SCO logical transport. The HV packets do not include a CRC and shall not be retransmitted. DV packets include a CRC on the data section, but not on the synchronous data section. The data section of DV packets shall be retransmitted. SCO packets may be routed to the synchronous I/O port. Four packets are allowed on the SCO logical transport: HV1, HV2, HV3 and DV. These packets are typically used for 64kb/s speech transmission but may be used for transparent synchronous data.

6.5.2.1 HV1 packet

The **HV1** packet has 10 information bytes. The bytes are protected with a rate 1/3 FEC. No CRC is present. The payload length is fixed at 240 bits. There is no payload header present.

6.5.2.2 HV2 packet

The **HV2** packet has 20 information bytes. The bytes are protected with a rate 2/3 FEC. No CRC is present. The payload length is fixed at 240 bits. There is no payload header present.

6.5.2.3 HV3 packet

The **HV3** packet has 30 information bytes. The bytes are not protected by FEC. No CRC is present. The payload length is fixed at 240 bits. There is no payload header present.

6.5.2.4 DV packet

The DV packet is a combined data - voice packet. The DV packet shall only be used in place of an HV1 packet. The payload is divided into a voice field of 80 bits and a data field containing up to 150 bits, see Figure 6.10. The voice field is not protected by FEC. The data field has between 1 and 10 information bytes (including the 1-byte payload header) plus a 16-bit CRC code. The data field (including the CRC) is encoded with a rate 2/3 FEC. Since the **DV** packet has to be sent at regular intervals due to its synchronous contents, it is listed under the SCO packet types. The voice and data fields shall be treated separately. The voice field shall be handled in the same way as normal SCO data and shall never be retransmitted; that is, the voice field is always new. The data field is checked for errors and shall be retransmitted if necessary. When the asynchronous data field in the DV packet has not be acknowledged before the SCO logical transport is terminated, the asynchronous data field shall be retransmitted in a DM1 packet.

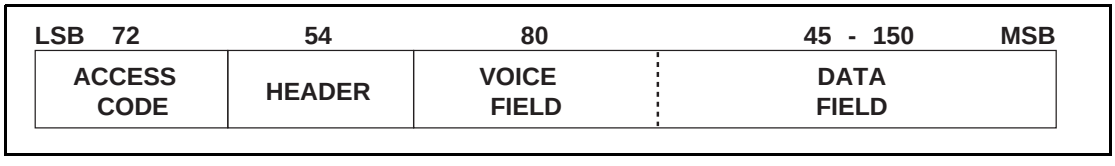

Figure 6.10: DV packet format

6.5.3 eSCO Packets

EV packets are used on the synchronous eSCO logical transport. The packets include a CRC and retransmission may be applied if no acknowledgement of proper reception is received within the retransmission window. eSCO packets may be routed to the synchronous I/O port. Three eSCO packet types (EV3, EV4, EV5) are defined for Basic Rate operation and four additional eSCO packet types (2-EV3, 3-EV3, 2-EV5, 3-EV5) for Enhanced Data Rate operation. The eSCO packets may be used for 64kb/s speech transmission as well as transparent data at 64kb/s and other rates.

6.5.3.1 EV3 packet

The **EV3** packet has between 1 and 30 information bytes plus a 16-bit CRC code. The bytes are not protected by FEC. The EV3 packet may cover up to a single time slot. There is no payload header present. The payload length is set during the LMP eSCO setup and remains fixed until the link is removed or re-negotiated.

6.5.3.2 EV4 packet

The **EV4** packet has between 1 and 120 information bytes plus a 16-bit CRC code. The EV4 packet may cover to up three time slots. The information plus CRC bits are coded with a rate 2/3 FEC. There is no payload header present. The payload length is set during the LMP eSCO setup and remains fixed until the link is removed or re-negotiated.

6.5.3.3 EV5 packet

The **EV5** packet has between 1 and 180 information bytes plus a 16-bit CRC code. The bytes are not protected by FEC. The EV5 packet may cover up to three time slots. There is no payload header present. The payload length is set during the LMP eSCO setup and remains fixed until the link is removed or re-negotiated.

6.5.3.4 2-EV3 packet

The **2-EV3** packet is similar to the EV3 packet except that the payload is modulated using π/4-DQPSK. It has between 1 and 60 information bytes plus a 16-bit CRC code. The bytes are not protected by FEC. The 2-EV3 packet covers a single time slot. There is no payload header present. The payload length is set during the LMP eSCO setup and remains fixed until the link is removed or re-negotiated.

6.5.3.5 2-EV5 packet

The **2-EV5** packet is similar to the EV5 packet except that the payload is modulated using π/4-DQPSK. It has between 1 and 360 information bytes plus a 16-bit CRC code. The bytes are not protected by FEC. The 2-EV5 packet may cover up to three time slots. There is no payload header present. The payload length is set during the LMP eSCO setup and remains fixed until the link is removed or re-negotiated.

6.5.3.6 3-EV3 packet

The **3-EV3** packet is similar to the EV3 packet except that the payload is modulated using 8DPSK. It has between 1 and 90 information bytes plus a 16-bit CRC code. The bytes are not protected by FEC. The 3-EV3 packet covers a single time slot. There is no payload header present. The payload length is set during the LMP eSCO setup and remains fixed until the link is removed or re-negotiated.

6.5.3.7 3-EV5 packet

The **3-EV5** packet is similar to the EV5 packet except that the payload is modulated using 8DPSK. It has between 1 and 540 information bytes plus a 16-bit CRC code. The bytes are not protected by FEC. The 3-EV5 packet may cover up to three time slots. There is no payload header present. The payload length is set during the LMP eSCO setup and remains fixed until the link is removed or re-negotiated.

6.5.4 ACL Packets

ACL packets are used on the asynchronous logical transport. The information carried may be user data or control data.

Seven packet types are defined for Basic Rate operation: DM1, DH1, DM3, DH3, DM5, DH5 and AUX1. Six additional packets are defined for Enhanced Data Rate operation: 2-DH1, 3-DH1, 2-DH3, 3-DH3, 2-DH5 and 3-DH5.

6.5.4.1 DM1 packet

The DM1 packet carries data information only. The payload has between 1 and 18 information bytes (including the 1-byte payload header) plus a 16-bit CRC code. The DM1 packet occupies a single time slot. The information plus CRC bits are coded with a rate 2/3 FEC. The payload header in the DM1 packet is 1 byte long, see Figure 6.12 on page 127. The length indicator in the payload header specifies the number of user bytes (excluding payload header and the CRC code).

6.5.4.2 DH1 packet

This packet is similar to the DM1 packet, except that the information in the payload is not FEC encoded. As a result, the DH1 packet has between 1 and 28 information bytes (including the 1-byte payload header) plus a 16-bit CRC code. The DH1 packet occupies a single time slot.

6.5.4.3 DM3 packet

The DM3 packet may occupy up to three time slots. The payload has between 2 and 123 information bytes (including the 2-byte payload header) plus a 16-bit CRC code. The information plus CRC bits are coded with a rate 2/3 FEC. The payload header in the DM3 packet is 2 bytes long, see Figure 6.13 on page 127. The length indicator in the payload header specifies the number of user bytes (excluding payload header and the CRC code).

6.5.4.4 DH3 packet

This packet is similar to the DM3 packet, except that the information in the payload is not FEC encoded. As a result, the DH3 packet has between 2 and 185 information bytes (including the 2-byte payload header) plus a 16-bit CRC code. The DH3 packet may occupy up to three time slots.

6.5.4.5 DM5 packet

The DM5 packet may occupy up to five time slots. The payload has between 2 and 226 information bytes (including the 2-byte payload header) plus a 16-bit

CRC code. The payload header in the DM5 packet is 2 bytes long. The information plus CRC bits are coded with a rate 2/3 FEC. The length indicator in the payload header specifies the number of user bytes (excluding payload header and the CRC code).

6.5.4.6 DH5 packet

This packet is similar to the DM5 packet, except that the information in the payload is not FEC encoded. As a result, the DH5 packet has between 2 and 341 information bytes (including the 2-byte payload header) plus a 16-bit CRC code. The DH5 packet may occupy up to five time slots.

6.5.4.7 AUX1 packet

This packet resembles a DH1 packet but has no CRC code. The AUX1 packet has between 1 and 30 information bytes (including the 1-byte payload header). The AUX1 packet occupies a single time slot. The AUX1 packet shall not be used for the ACL-U or ACL-C logical links. An AUX1 packet may be discarded.

6.5.4.8 2-DH1 packet

This packet is similar to the DH1 packet except that the payload is modulated using π/4-DQPSK. The 2-DH1 packet has between 2 and 56 information bytes (including the 2-byte payload header) plus a 16-bit CRC code. The 2-DH1 packet occupies a single time slot.

6.5.4.9 2-DH3 packet

This packet is similar to the DH3 packet except that the payload is modulated using π/4-DQPSK. The 2-DH3 packet has between 2 and 369 information bytes (including the 2-byte payload header) plus a 16-bit CRC code. The 2-DH3 packet may occupy up to three time slots.

6.5.4.10 2-DH5 packet

This packet is similar to the DH5 packet except that the payload is modulated using π/4-DQPSK. The 2-DH5 packet has between 2 and 681 information bytes (including the 2-byte payload header) plus a 16-bit CRC code. The 2-DH5 packet may occupy up to five time slots.

6.5.4.11 3-DH1 packet

This packet is similar to the DH1 packet except that the payload is modulated using 8DPSK. The 3-DH1 packet has between 2 and 85 information bytes

(including the 2-byte payload header) plus a 16-bit CRC code. The 3-DH1 packet occupies a single time slot.

6.5.4.12 3-DH3 packet

This packet is similar to the DH3 packet except that the payload is modulated using 8DPSK. The 3-DH3 packet has between 2 and 554 information bytes (including the 2-byte payload header) plus a 16-bit CRC code. The 3-DH3 packet may occupy up to three time slots.

6.5.4.13 3-DH5 packet

This packet is similar to the DH5 packet except that the payload is modulated using 8DPSK. The 3-DH5 packet has between 2 and 1023 information bytes (including the 2-byte payload header) plus a 16-bit CRC code. The 3-DH5 packet may occupy up to five time slots.

6.6 PAYLOAD FORMAT

In the payload, two fields are distinguished: the synchronous data field and the asynchronous data field. The ACL packets only have the asynchronous data field and the SCO and eSCO packets only have the synchronous data field – with the exception of the DV packets which have both.

6.6.1 Synchronous Data Field

In SCO, which is only supported in Basic Rate mode, the synchronous data field has a fixed length and consists only of the synchronous data body portion. No payload header is present.

In Basic Rate eSCO, the synchronous data field consists of two segments: a synchronous data body and a CRC code. No payload header is present.

In Enhanced Data Rate eSCO, the synchronous data field consists of five segments: a guard time, a synchronization sequence, a synchronous data body, a CRC code and a trailer. No payload header is present.

1. Enhanced Data Rate Guard Time

For Enhanced Data Rate packets the guard time is defined as the period starting at the end of the last GFSK symbol of the header and ending at the start of the reference symbol of the synchronization sequence. The length of the guard time shall be between 4.75 µsec and 5.25 µsec.

2. Enhanced Data Rate Synchronization Sequence

For Enhanced Data Rate packets the symbol timing at the start of the synchronization sequence shall be within ±¼ µsec of the symbol timing of the last GFSK symbol of the packet header. The length of the synchronization sequence is 11 µsec (11 DPSK symbols) and consists of a reference symbol (with arbitrary phase) followed by ten DPSK symbols.

The phase changes between the DPSK symbols (shown in Synchronization sequence) shall be

$$\{\varphi_1, \varphi_2, \varphi_3, \varphi_4, \varphi_5, \varphi_6, \varphi_7, \varphi_8, \varphi_9, \varphi_{10}\} = \{3\pi/4, -3\pi/4, 3\pi/4, -3\pi/4, 3\pi/4, -3\pi/4, -3\pi/4, 3\pi/4, 3\pi/4, 3\pi/4\} \quad \text{(EQ 12)}$$

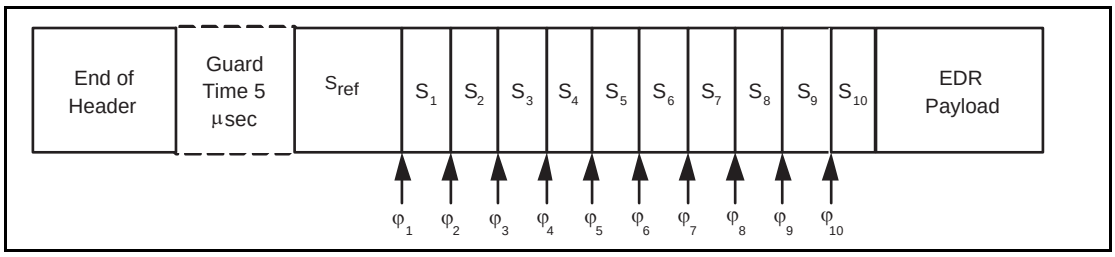

Figure 6.11: Synchronization sequence

Sref is the reference symbol. φ_1 is the phase change between the reference symbol and the first DPSK symbol S_1. φ_k is the phase change between the k-1th symbol S_{k-1} and the kth symbol S_k

Note: the synchronization sequence may be generated using the modulator by pre-pending the data with bits that generate the synchronization sequence.

For $\pi/4$-DQPSK, the bit sequence used to generate the synchronization sequence is 0,1,1,1,0,1,1,1,0,1,1,1,1,1,0,1,0,1,0,1.

For 8DPSK, the bit sequence used to generate the synchronization sequence is 0,1,0,1,1,1,0,1,0,1,1,1,0,1,0,1,1,1,1,1,1,1,0,1,0,0,1,0,0,1,0.

3. Synchronous data body

For HV and DV packets, the synchronous data body length is fixed. For EV packets, the synchronous data body length is negotiated during the LMP eSCO setup. Once negotiated, the synchronous data body length remains constant unless re-negotiated. The synchronous data body length may be different for each direction of the eSCO logical transport.

4. CRC code

The 16-bit CRC in the payload is generated as specified in Section 7.1 on page 133. The 8-bit UAP of the master is used to initialize the CRC generator.

Only the Synchronous data body segment is used to generate the CRC code.

5. Enhanced Data Rate Trailer

For Enhanced Data Rate packets, two trailer symbols shall be added to the end of the payload. The trailer bits shall be all zero, i.e. {00, 00} for the π/4-DQPSK and {000, 000} for the 8DPSK.

6.6.2 Asynchronous Data Field

Basic rate ACL packets have an asynchronous data field consisting of two or three segments: a payload header, a payload body, and possibly a CRC code (the AUX1 packet does not carry a CRC code).

Enhanced Data Rate ACL packets have an asynchronous data field consisting of six segments: a guard time, a synchronization sequence, a payload header, a payload body, a CRC and a trailer.

1. Enhanced Data Rate Guard time

This is the same as defined for the Synchronous data field in Section 6.6.1.

2. Enhanced Data Rate Synchronization sequence

This is the same as defined for the Synchronous data field in Section 6.6.1.

3. Payload header

The payload header is one or two bytes long. Basic rate packets in segments one and two have a 1-byte payload header; Basic Rate packets in segments three and four and all Enhanced Data Rate packets have a 2-byte payload header. The payload header specifies the logical link (2-bit LLID indication), controls the flow on the logical channels (1-bit FLOW indication), and has a payload length indicator (5 bits and 10 bits for 1-byte and 2-byte payload headers, respectively). In the case of a 2-byte payload header, the length indicator is extended by five bits into the next byte. The remaining three bits of the second byte are reserved for future use and shall be set to zero. The formats of the 1-byte and 2-byte payload headers are shown in Figure 6.12 on page 127 and Figure 6.13 on page 127.

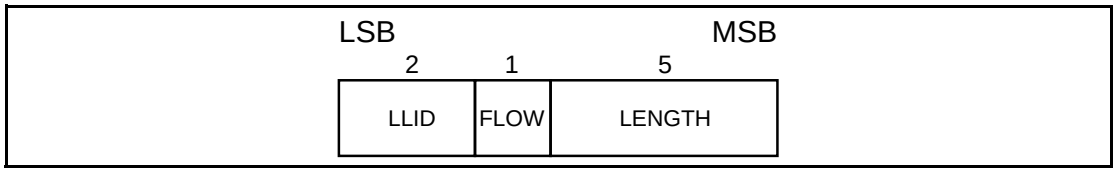

Figure 6.12: Payload header format for Basic Rate single-slot ACL packets.

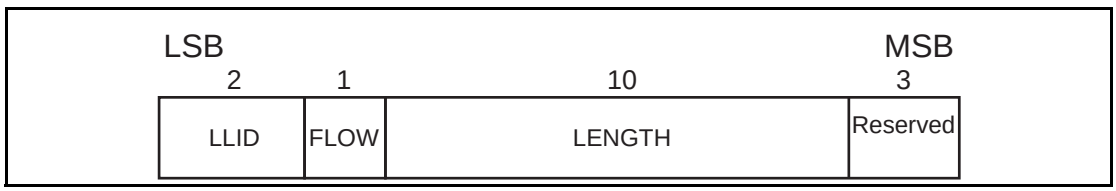

Figure 6.13: Payload header format for multi-slot ACL packets and all EDR ACL packets.

The LLID field shall be transmitted first, the length field last. In Table 6.6 on page 128, more details about the contents of the LLID field are listed.

LLID code b_1b_0	**Logical Link**	**Information**
00	NA	undefined
01	ACL-U	Continuation fragment of an L2CAP message
10	ACL-U	Start of an L2CAP message or no fragmentation
11	ACL-C	LMP message

Table 6.6: Logical link LLID field contents

An L2CAP message may be fragmented into several packets. Code 10 shall be used for an ACL-U packet carrying the first fragment of such a message; code 01 shall be used for continuing fragments. The first fragment of an L2CAP message sent over HCI is identified by having a Packet_Boundary_Flag value of 00 or 10 both of which are mapped to LLID code 10. If there is no fragmentation, code 10 shall be used for every packet. Code 11 shall be used for LMP messages. Code 00 is reserved for future use.

The flow indicator in the payload is used to control the flow at the L2CAP level. It is used to control the flow per logical link. FLOW=1 means flow-on (GO) and FLOW=0 means flow-off (STOP). After a new connection has been established the flow indicator shall be set to GO. When a device receives a payload header with the flow bit set to STOP, it shall stop the transmission of ACL packets before an additional amount of payload data is sent. This amount is defined as the flow control lag, expressed as a number of bytes. The shorter the flow control lag, the less buffering the other device must dedicate to this function. The flow control lag shall not exceed 1792 bytes (7×256 bytes). In order to allow devices to optimize the selection of packet length and buffer space, the flow control lag of a given implementation shall be provided in the LMP_features_res message.

If a packet containing the payload flow bit of STOP is received, with a valid packet header but bad payload, the payload flow control bit shall be ignored. The baseband ACK contained in the packet header will be received and a further ACL packet may be transmitted. Each occurrence of this situation allows a further ACL packet to be sent in spite of the flow control request being sent via the payload header flow control bit. It is recommended that devices that use the payload header flow bit should ensure that no further ACL packets are sent until the payload flow bit has been correctly received. This can be accomplished by simultaneously turning on the flow bit in the packet header and keeping it on until an ACK is received back (ARQN=1). This will typically be only one round trip time. Since they lack a payload CRC, AUX1 packets should not be used with a payload flow bit of STOP.

The Baseband Resource Manager is responsible for setting and processing the flow bit in the payload header. Real-time flow control shall be carried out at the packet level by the link controller via the flow bit in the packet header (see Section 6.4.3 on page 114). With the payload flow bit, traffic from the remote end can be controlled. It is allowed to generate and send an ACL packet with payload length zero irrespective of flow status. L2CAP start-fragment and continue-fragment indications (LLID=10 and LLID=01) also retain their meaning when the payload length is equal to zero (i.e. an empty start-fragment shall not be sent in the middle of an on-going ACL-U packet transmission). It is always safe to send an ACL packet with length=0 and LLID=01. The payload flow bit has its own meaning for each logical link (ACL-U or ACL-C), see Table 6.7 on page 129. On the ACL-C logical link, no flow control is applied and the payload FLOW bit shall always be set to one.

LLID code b_1b_0	**Usage and semantics of the ACL payload header FLOW bit**
00	Not defined, reserved for future use.
01 or 10	Flow control of the ACL-U channel (L2CAP messages)
11	Always set FLOW=1 on transmission and ignore the bit on reception

Table 6.7: Use of payload header flow bit on the logical links.

The length indicator shall be set to the number of bytes (i.e. 8-bit words) in the payload excluding the payload header and the CRC code; i.e. the payload body only. With reference to Figure 6.12 and Figure 6.13, the MSB of the length field in a 1-byte header is the last (right-most) bit in the payload header; the MSB of the length field in a 2-byte header is the fourth bit to the left from the right-most end of the second byte in the payload header.

4. Payload body

The payload body includes the user information and determines the effective user throughput. The length of the payload body is indicated in the length field of the payload header.

5. CRC code generation

The 16-bit cyclic redundancy check code in the payload is generated as specified in Section 7.1 on page 133. Before determining the CRC code, an 8-bit value is used to initialize the CRC generator. For the CRC code in the FHS packets sent in **master response** substate, the UAP of the slave is used. For the FHS packet and the extended inquiry response packet sent in **inquiry response** substate, the DCI (see Section 1.2.1 on page 66) is used. For all other packets, the UAP of the master is used.

Only the Payload header and Payload body segments are used to generate the CRC code.

6. Enhanced Data Rate Trailer

This is the same as defined for the Synchronous data field in section 6.6.1.

6.7 PACKET SUMMARY

A summary of the packets and their characteristics is shown in Table 6.8, Table 6.9 and Table 6.10. The payload represents the packet payload excluding FEC, CRC, and payload header.

Type	Payload (bytes)	FEC	CRC	Symmetric Max. Rate	Asymmetric Max. Rate
ID	na	na	na	na	na
NULL	na	na	na	na	na
POLL	na	na	na	na	na
FHS	18	2/3	yes	na	na

Table 6.8: Link control packets

Type	Payload Header (bytes)	User Payload (bytes)	FEC	CRC	Symmetric Max. Rate (kb/s)	Asymmetric Max. Rate (kb/s)	
						Forward	Reverse
DM1	1	0-17	2/3	yes	108.8	108.8	108.8
DH1	1	0-27	no	yes	172.8	172.8	172.8
DM3	2	0-121	2/3	yes	258.1	387.2	54.4
DH3	2	0-183	no	yes	390.4	585.6	86.4
DM5	2	0-224	2/3	yes	286.7	477.8	36.3
DH5	2	0-339	no	yes	433.9	723.2	57.6
AUX1	1	0-29	no	no	185.6	185.6	185.6
2-DH1	2	0-54	no	yes	345.6	345.6	345.6
2-DH3	2	0-367	no	yes	782.9	1174.4	172.8
2-DH5	2	0-679	no	yes	869.1	1448.5	115.2
3-DH1	2	0-83	no	yes	531.2	531.2	531.2
3-DH3	2	0-552	no	yes	1177.6	1766.4	235.6
3-DH5	2	0-1021	no	yes	1306.9	2178.1	177.1

Table 6.9: ACL packets

Type	Payload Header (bytes)	User Payload (bytes)	FEC	CRC	Symmetric Max. Rate (kb/s)
HV1	na	10	1/3	no	64.0
HV2	na	20	2/3	no	64.0
HV3	na	30	no	no	64.0
DV[1]	1 D	10+(0-9) D	2/3 D	yes D	64.0+57.6 D
EV3	na	1-30	No	Yes	96
EV4	na	1-120	2/3	Yes	192
EV5	na	1-180	No	Yes	288
2-EV3	na	1-60	No	Yes	192
2-EV5	na	1-360	No	Yes	576
3-EV3	na	1-90	No	Yes	288
3-EV5	na	1-540	No	Yes	864

Table 6.10: Synchronous packets

1. Items followed by ‘D’ relate to data field only.

7 BITSTREAM PROCESSING

Bluetooth devices shall use the bitstream processing schemes as defined in the following sections.

Before the payload is sent over the air interface, several bit manipulations are performed in the transmitter to increase reliability and security. An HEC is added to the packet header, the header bits are scrambled with a whitening word, and FEC coding is applied. In the receiver, the inverse processes are carried out. Figure 7.1 on page 132 shows the processes carried out for the packet header both at the transmit and the receive side. All header bit processes are mandatory.

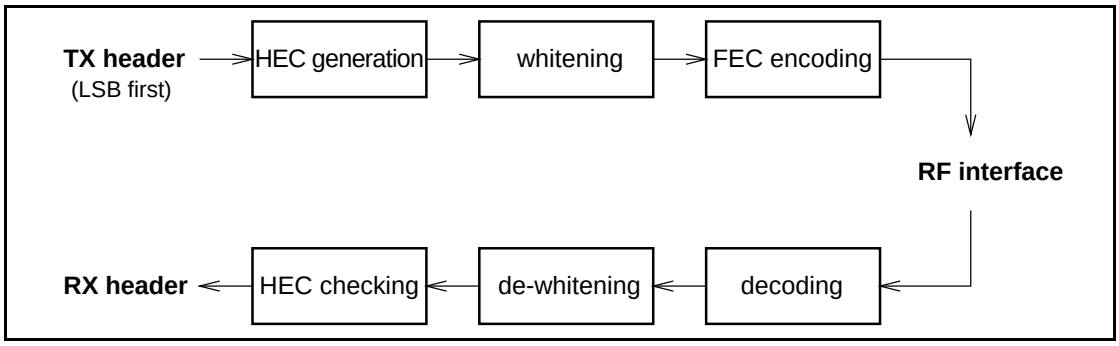

Figure 7.1: Header bit processes.

Figure 7.2 on page 132 shows the processes that may be carried out on the payload. In addition to the processes defined for the packet header, encryption can be applied on the payload. Only whitening and de-whitening, as explained in Section 7.2 on page 136, are mandatory for every payload; all other processes are optional and depend on the packet type (see Section 6.6 on page 125) and whether encryption is enabled. In Figure 7.2 on page 132, optional processes are indicated by dashed blocks.

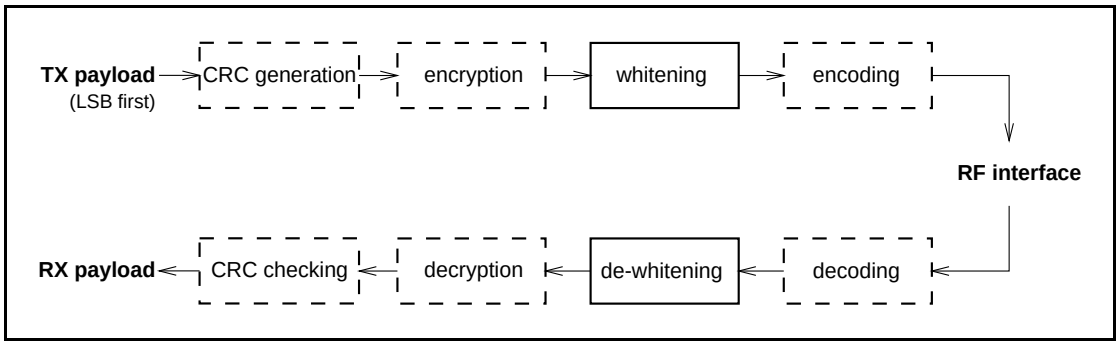

Figure 7.2: Payload bit processes.

7.1 ERROR CHECKING

The packet can be checked for errors or wrong delivery using the channel access code, the HEC in the header, and the CRC in the payload. At packet reception, the access code is checked first. Since the 64-bit sync word in the channel access code is derived from the 24-bit master LAP, this checks if the LAP is correct, and prevents the receiver from accepting a packet of another piconet (provided the LAP field of the master's BD_ADDR is different).

The HEC and CRC computations are normally initialized with the UAP of the master. Even though the access code may be the same for two piconets the different UAP values will typically cause the HEC and CRC to fail. However, there is an exception where no common UAP is available in the transmitter and receiver. This is the case when the HEC and CRC are generated for the FHS packet and the extended inquiry response packet in inquiry response substate. In this case the DCI value shall be used.

The generation and check of the HEC and CRC are summarized in Figure 7.5 on page 134 and Figure 7.8 on page 135. Before calculating the HEC or CRC, the shift registers in the HEC/CRC generators shall be initialized with the 8-bit UAP (or DCI) value. Then the header and payload information shall be shifted into the HEC and CRC generators, respectively (with the LSB first).

7.1.1 HEC Generation

The HEC generating LFSR is depicted in Figure 7.3 on page 133. The generator polynomial is

$g(D) = (D + 1)(D^7 + D^4 + D^3 + D^2 + 1) = D^8 + D^7 + D^5 + D^2 + D + 1$. Initially this circuit shall be pre-loaded with the 8-bit UAP such that the LSB of the UAP (denoted UAP_0) goes to the left-most shift register element, and, UAP_7 goes to the right-most element. The initial state of the HEC LFSR is depicted in Figure 7.4 on page 134. Then the data shall be shifted in with the switch S set in position 1. When the last data bit has been clocked into the LFSR, the switch S shall be set in position 2, and, the HEC can be read out from the register. The LFSR bits shall be read out from right to left (i.e., the bit in position 7 is the first to be transmitted, followed by the bit in position 6, etc.).

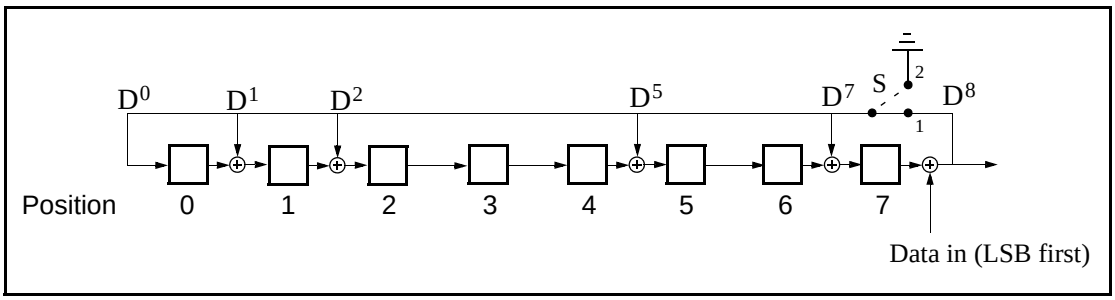

Figure 7.3: The LFSR circuit generating the HEC.

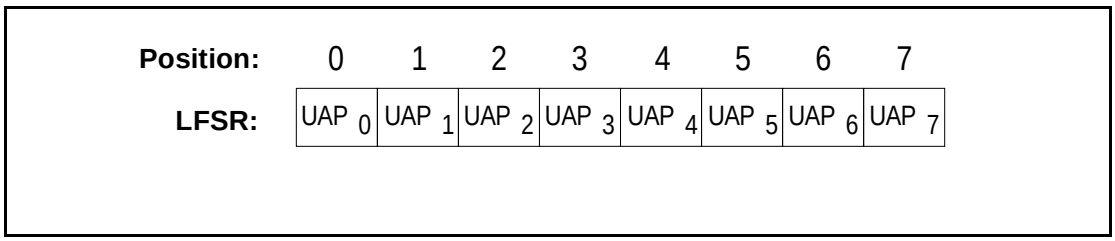

Figure 7.4: Initial state of the HEC generating circuit.

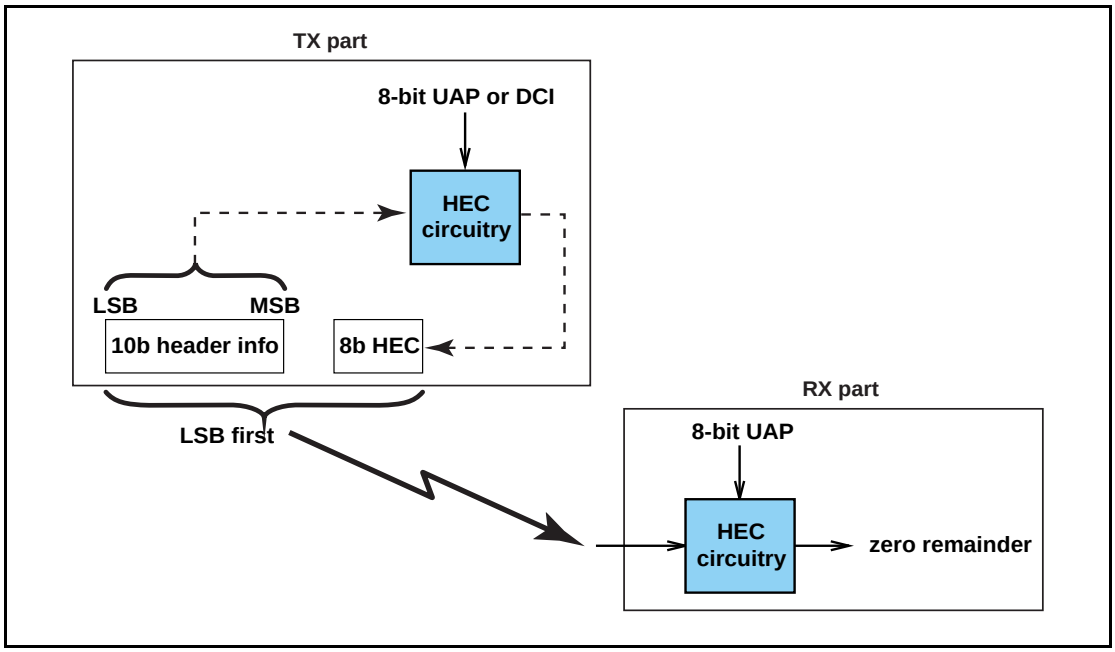

Figure 7.5: HEC generation and checking.

7.1.2 CRC Generation

The 16 bit LFSR for the CRC is constructed similarly to the HEC using the CRC-CCITT generator polynomial $g(D) = D^{16} + D^{12} + D^5 + 1$ (i.e. 210041 in octal representation) (see Figure 7.6 on page 135). For this case, the 8 left-most bits shall be initially loaded with the 8-bit UAP (UAP_0 to the left and UAP_7 to the right) while the 8 right-most bits shall be reset to zero. The initial state of the 16 bit LFSR is specified in Figure 7.7 on page 135. The switch S shall be set in position 1 while the data is shifted in. After the last bit has entered the LFSR, the switch shall be set in position 2, and, the register's contents shall be transmitted, from right to left (i.e., starting with position 15, then position 14, etc.).

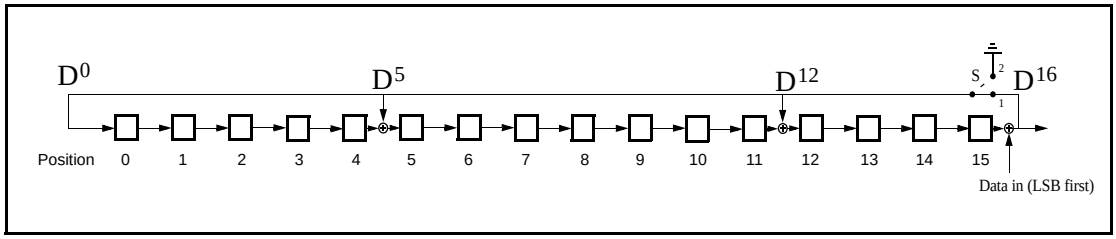

Figure 7.6: The LFSR circuit generating the CRC.

Position:	0	1	2	3	4	5	6	7	8	9	10	11	12	13	14	15
LFSR:	UAP_0	UAP_1	UAP_2	UAP_3	UAP_4	UAP_5	UAP_6	UAP_7	0	0	0	0	0	0	0	0

Figure 7.7: Initial state of the CRC generating circuit.

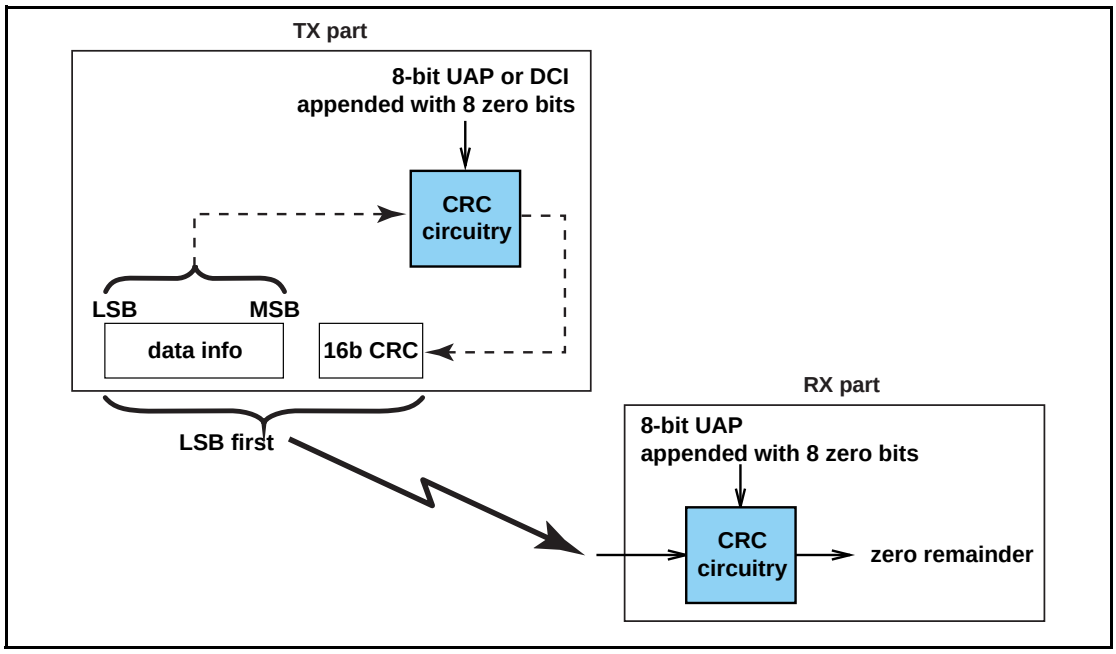

Figure 7.8: CRC generation and checking.

7.2 DATA WHITENING

Before transmission, both the header and the payload shall be scrambled with a data whitening word in order to randomize the data from highly redundant patterns and to minimize DC bias in the packet. The scrambling shall be performed prior to the FEC encoding.

At the receiver, the received data shall be descrambled using the same whitening word generated in the recipient. The descrambling shall be performed after FEC decoding.

The whitening word is generated with the polynomial $g(D) = D^7 + D^4 + 1$ (i.e., 221 in octal representation) and shall be subsequently XORed with the header and the payload. The whitening word is generated with the linear feedback shift register shown in Figure 7.9 on page 136. Before each transmission, the shift register shall be initialized with a portion of the master Bluetooth clock, CLK6-1, extended with an MSB of value one. This initialization shall be carried out with CLK1 written to position 0, CLK2 written to position 1, etc. Exceptions are the FHS packet sent during inquiry response or page response, and the extended inquiry response packet sent during inquiry response, where initialization of the whitening register shall be carried out differently. Instead of the master clock, the X-input used in the inquiry or page response (depending on current state) routine shall be used, see Table 2.2. The 5-bit value shall be extended with two MSBs of value 1. During register initialization, the LSB of X (i.e., X0) shall be written to position 0, X1 shall be written to position 1, etc.

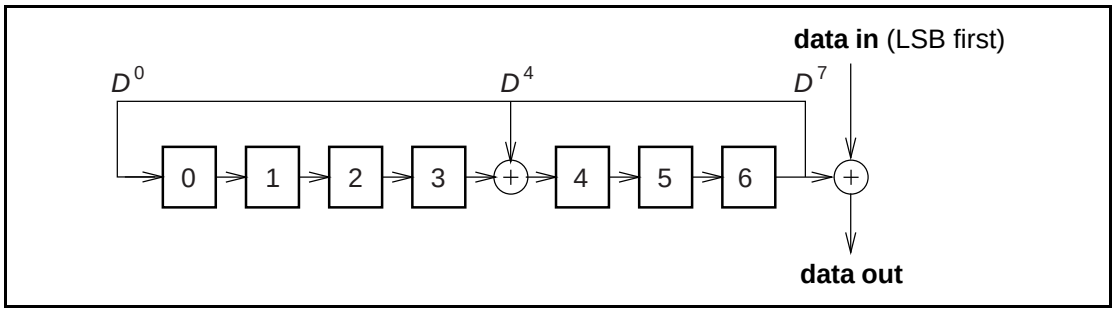

Figure 7.9: Data whitening LFSR.

After initialization, the packet header and the payload (including the CRC) are whitened. The payload whitening shall continue from the state the whitening LFSR had at the end of HEC. There shall be no re-initialization of the shift register between packet header and payload. The first bit of the “data in” sequence shall be the LSB of the packet header.

For Enhanced Data Rate packets, whitening shall not be applied to the guard, synchronization and trailer portions of the Enhanced Data Rate packets. During the periods where whitening is not applied the LFSR shall be paused.

7.3 ERROR CORRECTION

There are three error correction schemes defined for Bluetooth:

- 1/3 rate FEC
- 2/3 rate FEC
- ARQ scheme for the data

The purpose of the FEC scheme on the data payload is to reduce the number of retransmissions. However, in a reasonably error-free environment, FEC gives unnecessary overhead that reduces the throughput. Therefore, the packet definitions given in Section 6 have been kept flexible to use FEC in the payload or not, resulting in the **DM** and **DH** packets for the ACL logical transport, **HV** packets for the SCO logical transport, and **EV** packets for the eSCO logical transport. The packet header is always protected by a 1/3 rate FEC since it contains valuable link information and is designed to withstand more bit errors.

Correction measures to mask errors in the voice decoder are not included in this section. This matter is discussed in Section 9.3 on page 193.

7.4 FEC CODE: RATE 1/3

A simple 3-times repetition FEC code is used for the header. The repetition code is implemented by repeating each bit three times, see the illustration in Figure 7.10 on page 137. The 3-times repetition code is used for the entire header, as well as for the synchronous data field in the **HV1** packet.

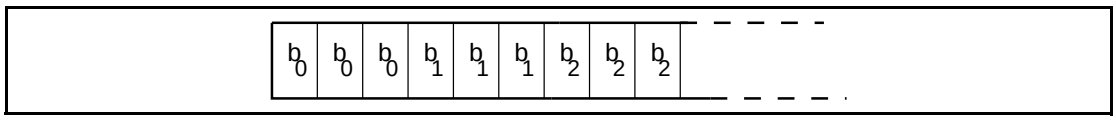

Figure 7.10: Bit-repetition encoding scheme.

7.5 FEC CODE: RATE 2/3

The other FEC scheme is a (15,10) shortened Hamming code. The generator polynomial is $g(D) = (D + 1)(D^4 + D + 1)$. This corresponds to 65 in octal notation. The LFSR generating this code is depicted in Figure 7.11 on page 138. Initially all register elements are set to zero. The 10 information bits are sequentially fed into the LFSR with the switches S1 and S2 set in position 1. Then, after the final input bit, the switches S1 and S2 are set in position 2, and the five parity bits are shifted out. The parity bits are appended to the information bits. Subsequently, each block of 10 information bits is encoded into a 15 bit codeword. This code can correct all single errors and detect all double errors in each codeword. This 2/3 rate FEC is used in the **DM** packets, in the data field of the **DV** packet, in the **FHS** packet, in the **HV2** packet, and in the **EV4** packet. Since the encoder operates with information segments of length 10, tail bits with value zero shall be appended after the CRC bits to bring the total number of bits equal to a multiple of 10. The number of tail bits to append shall be the least possible that achieves this (i.e., in the interval 0...9). These tail bits are not included in the payload length indicator for ACL packets or in the payload length field of the eSCO setup LMP command.

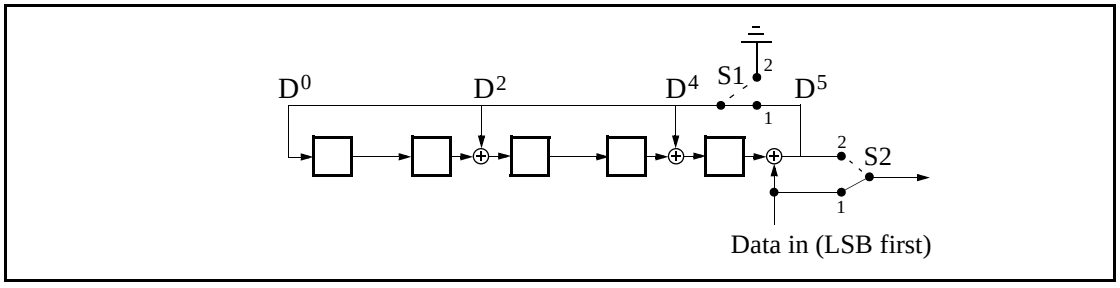

Figure 7.11: LFSR generating the (15,10) shortened Hamming code.

7.6 ARQ SCHEME

With an automatic repeat request scheme, **DM, DH** the data field of **DV** packets, and **EV** packets shall be transmitted until acknowledgement of a successful reception is returned by the destination (or timeout is exceeded). The acknowledgement information shall be included in the header of the return packet. The ARQ scheme is only used on the payload in the packet and only on packets that have a CRC. The packet header and the synchronous data payload of HV and DV packets are not protected by the ARQ scheme.

7.6.1 Unnumbered ARQ

Bluetooth uses a fast, unnumbered acknowledgment scheme. An ACK (ARQN=1) or a NAK (ARQN=0) is returned in response to the receipt of previously received packet. The slave shall respond in the slave-to-master slot directly following the master-to-slave slot unless the slave has scatternet commitments in that timeslot; the master shall respond at the next event addressing the same slave (the master may have addressed other slaves between the last received packet from the considered slave and the master response to this packet). For a packet reception to be successful, at least the HEC must pass. In addition, the CRC must pass if present.

In the first POLL packet at the start of a new connection (as a result of a page, page scan, role switch, or unpark) the master shall initialize the ARQN bit to NAK. The response packet sent by the slave shall also have the ARQN bit set to NAK. The subsequent packets shall use the following rules. The initial value of the master's eSCO ARQN at link set-up shall be NAK.

The ARQ bit shall only be affected by data packets containing CRC and empty slots. As shown in Figure 7.12 on page 140, upon successful reception of a CRC packet, the ARQN bit shall be set to ACK. If, in any receive slot in the slave, or, in a receive slot in the master following transmission of a packet, one of these events applies:

1. no access code is detected,
2. the HEC fails,
3. the CRC fails,

then the ARQN bit shall be set to NAK. In eSCO the ARQN bit may be set to ACK even when the CRC on an EV packet has failed thus enabling delivery of erroneous packets.

Packets that have correct HEC but that are addressed to other slaves, or packets other than DH, DM, DV or EV packets, shall not affect the ARQN bit, except as noted in Section 7.6.2.2 on page 143. In these cases the ARQN bit shall be left as it was prior to reception of the packet. For ACL packets, if a CRC packet with a correct header has the same SEQN as the previously received CRC packet, the ARQN bit shall be set to ACK and the payload shall be ignored without checking the CRC. For eSCO packets, the SEQN shall not be used

when determining the ARQN. If an eSCO packet has been received successfully within the eSCO window subsequent receptions within the eSCO window shall be ignored. At the end of the eSCO window, the master's ARQN shall be retained for the first master-to-slave transmission in the next eSCO window.

The ARQ bit in the FHS packet is not meaningful. Contents of the ARQN bit in the FHS packet shall not be checked.

The ARQ bit in the extended inquiry response packet is not used. The bit shall be set to zero and ignored upon receipt.

Broadcast packets shall be checked on errors using the CRC, but no ARQ scheme shall be applied. Broadcast packets shall never be acknowledged.

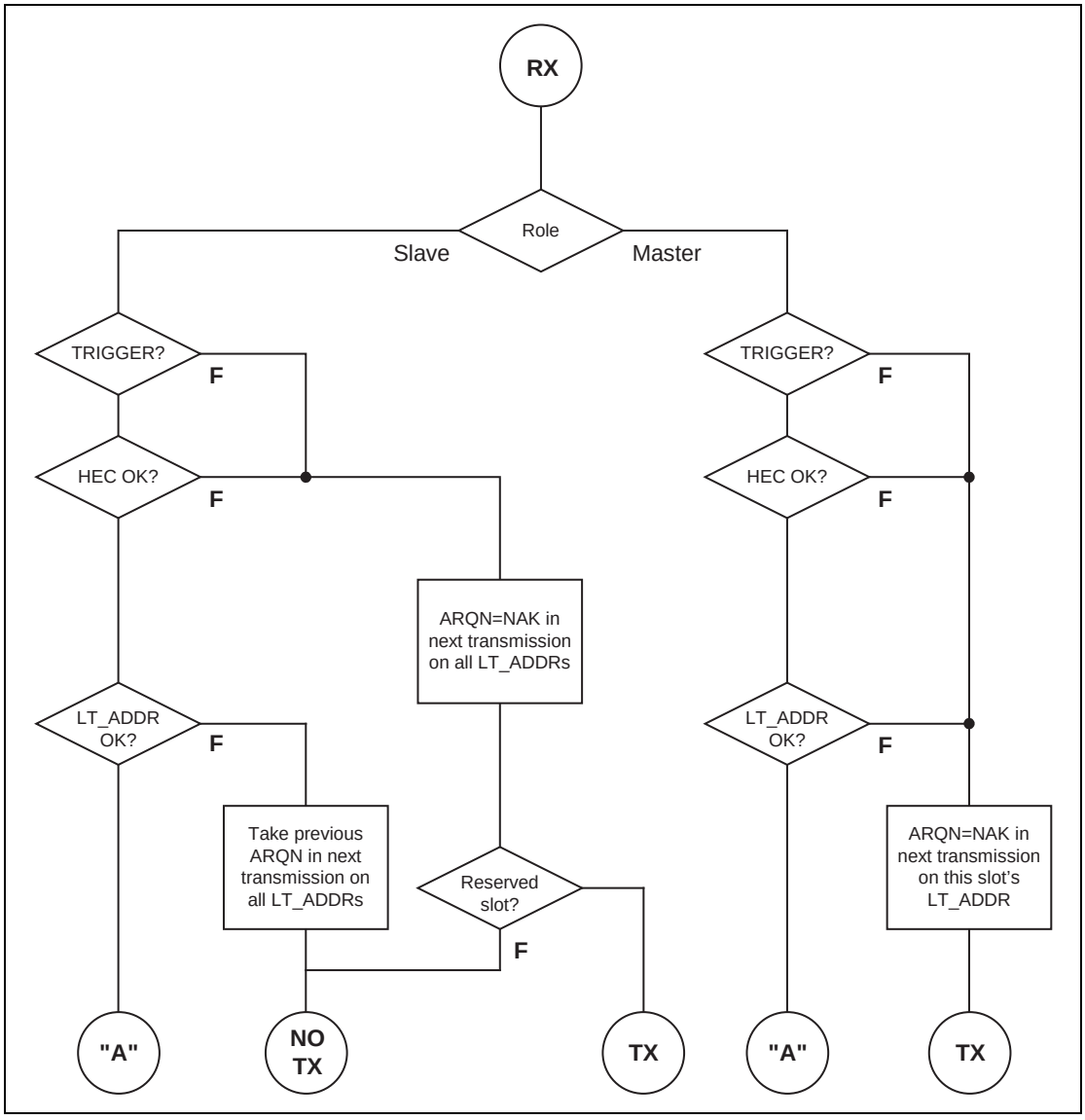

Figure 7.12: Stage 1 of the receive protocol for determining the ARQN bit.

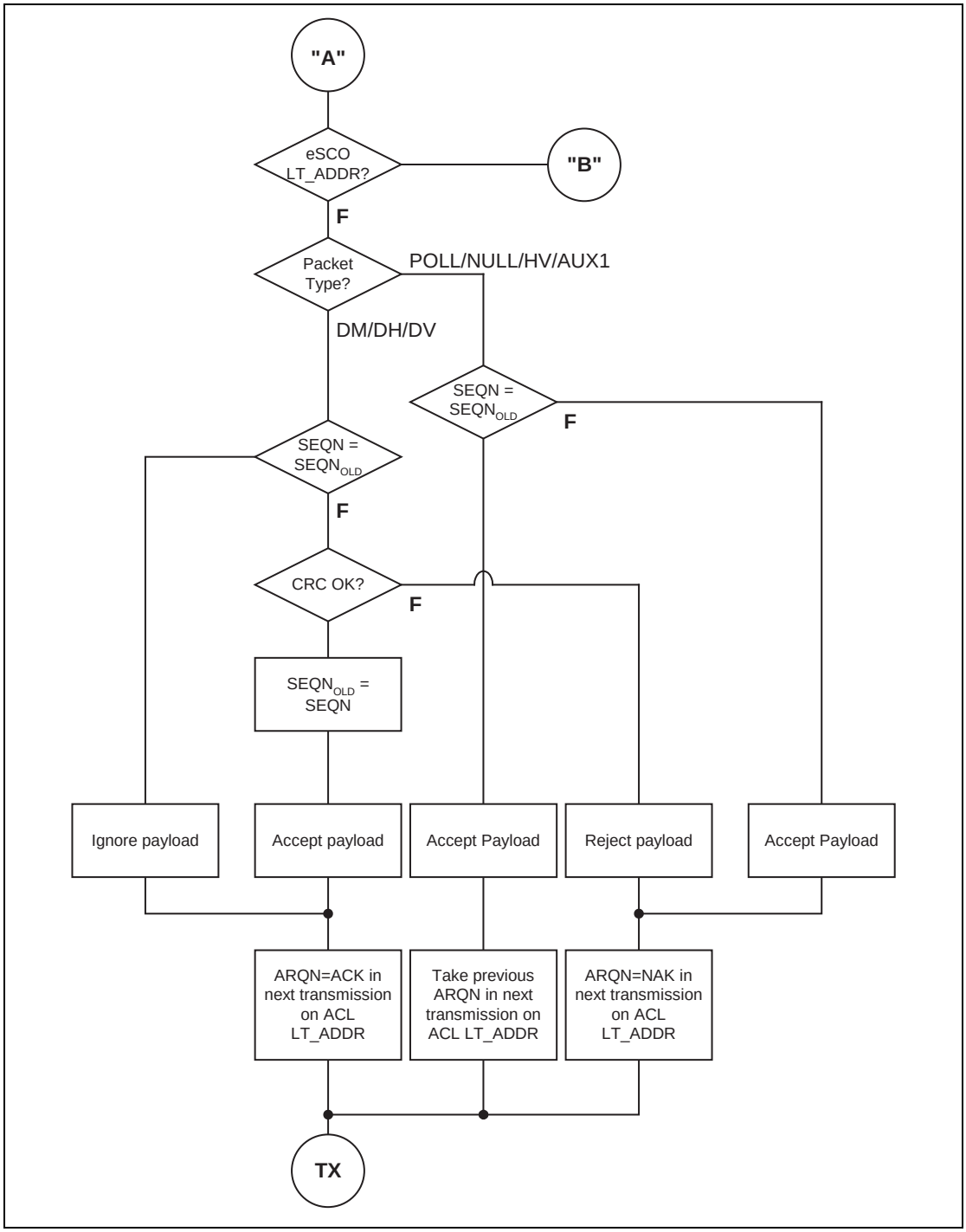

Figure 7.13: Stage 2 (ACL) of the receive protocol for determining the ARQN bit.

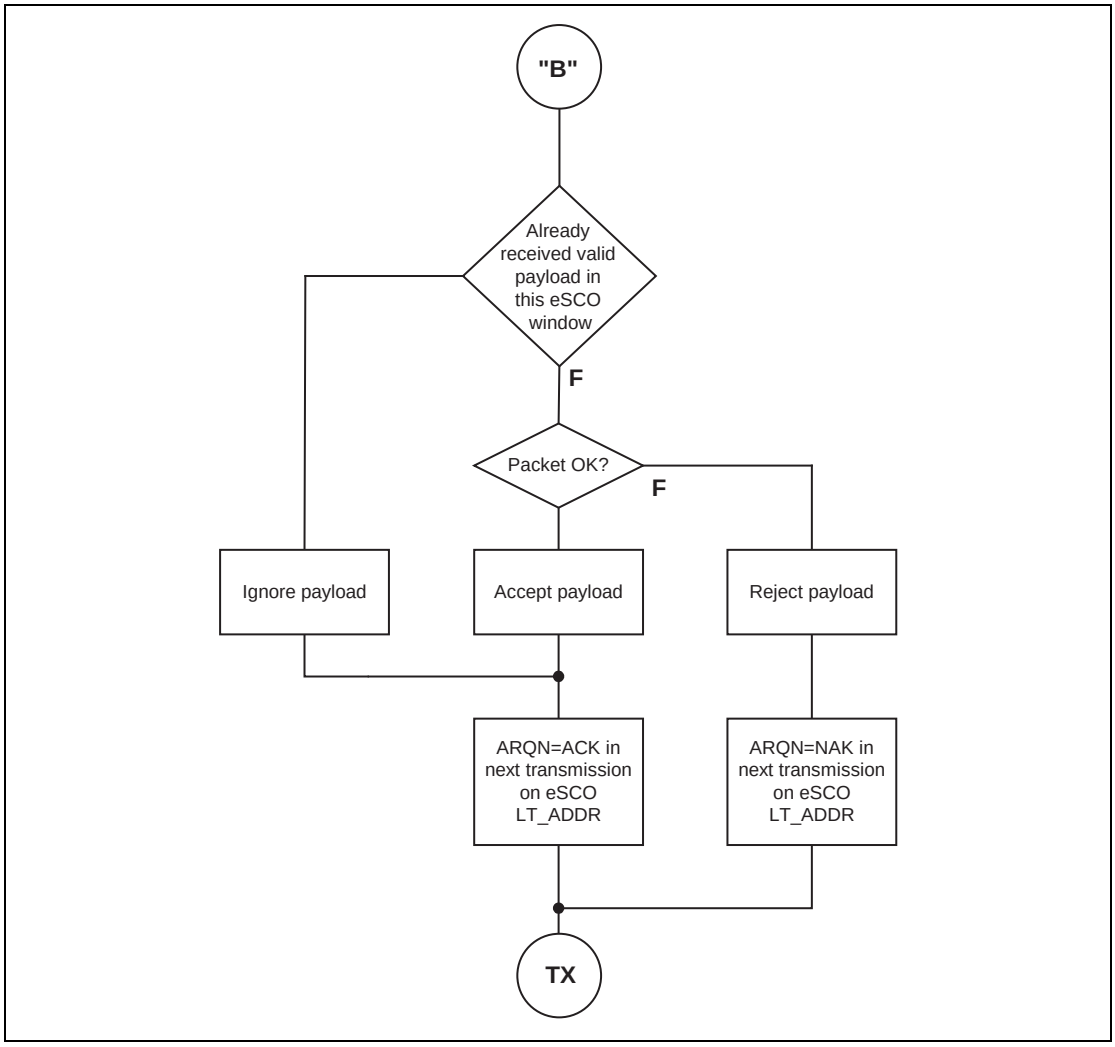

Figure 7.14: Stage 2 (eSCO) of the receive protocol for determining the ARQN bit.

7.6.2 Retransmit Filtering

The data payload shall be transmitted until a positive acknowledgment is received or a timeout is exceeded. A retransmission shall be carried out either because the packet transmission itself failed, or because the acknowledgment transmitted in the return packet failed (note that the latter has a lower failure probability since the header is more heavily coded). In the latter case, the destination keeps receiving the same payload over and over again. In order to filter out the retransmissions in the destination, the SEQN bit is present in the header. Normally, this bit is alternated for every new CRC data payload transmission. In case of a retransmission, this bit shall not be changed so the destination can compare the SEQN bit with the previous SEQN value. If different, a new data payload has arrived; otherwise it is the same data payload and may be ignored. Only new data payloads shall be transferred to the Baseband Resource Manager. Note that CRC data payloads can be carried only by **DM**, **DH**, **DV** or **EV** packets.

7.6.2.1 Initialization of SEQN at start of new connection

The SEQN bit of the first CRC data packet at the start of a connection (as a result of page, page scan, or role switch or unpark) on both the master and the slave sides shall be set to 1. The subsequent packets shall use the rules in the following sections.

7.6.2.2 ACL and SCO retransmit filtering

The SEQN bit shall only be affected by the CRC data packets as shown in Figure 7.15. It shall be inverted every time a new CRC data packet is sent. The CRC data packet shall be retransmitted with the same SEQN number until an ACK is received or the packet is flushed. When an ACK is received, a new payload may be sent and on that transmission the SEQN bit shall be inverted. If a device decides to flush (see Section 7.6.3 on page 145), and it has not received an acknowledgement for the current packet, it shall replace the current packet with an ACL-U continuation packet with the same sequence number as the current packet and length zero. If it replaces the current packet in this way it shall not move on to transmit the next packet until it has received an ACK.

If the slave receives a packet other than DH, DM, DV or EV with the SEQN bit inverted from that in the last header successfully received on the same LT_ADDR, it shall set the ARQN bit to NAK until a DH, DM, DV or EV packet is successfully received.

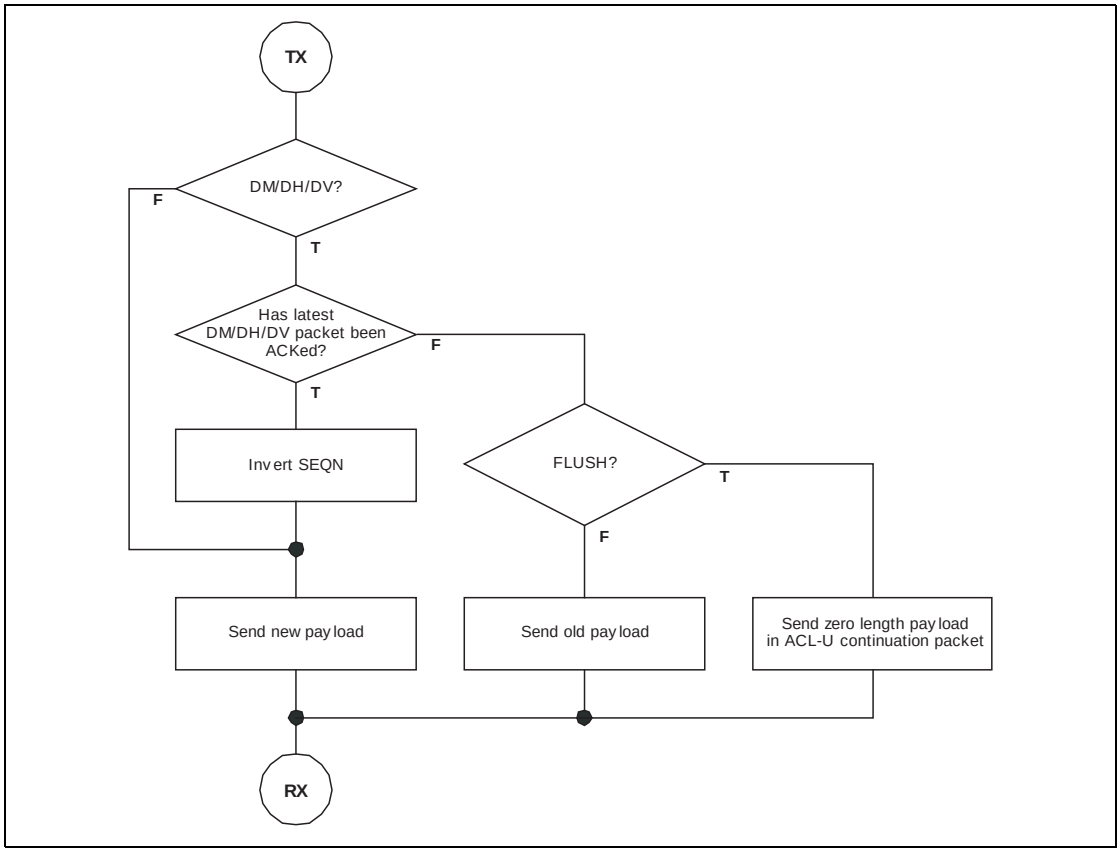

Figure 7.15: Transmit filtering for packets with CRC.

7.6.2.3 eSCO retransmit filtering

In eSCO, the SEQN bit shall be toggled every eSCO window. The value shall be constant for the duration of the eSCO window. The initial value of SEQN shall be zero.

For a given eSCO window the SEQN value shall be constant.

7.6.2.4 FHS retransmit filtering

The SEQN bit in the FHS packet is not meaningful. This bit may be set to any value. Contents of the SEQN bit in the FHS packet shall not be checked.

7.6.2.5 Extended Inquiry Response retransmit filtering

The SEQN bit in the extended inquiry response packet is not used. The bit shall be set to zero and ignored upon receipt.

7.6.2.6 Packets without CRC retransmit filtering

During transmission of packets without a CRC the SEQN bit shall remain the same as it was in the previous packet.

7.6.3 Flushing Payloads

In ACL, the ARQ scheme can cause variable delay in the traffic flow since retransmissions are inserted to assure error-free data transfer. For certain communication links, only a limited amount of delay is allowed: retransmissions are allowed up to a certain limit at which the current payload shall be ignored. This data transfer is indicated as **isochronous traffic**. This means that the retransmit process must be overruled in order to continue with the next data payload. Aborting the retransmit scheme is accomplished by *flushing* the old data and forcing the link controller to take the next data instead.

Flushing results in loss of remaining portions of an L2CAP message. Therefore, the packet following the flush shall have a start packet indication of LLID = 10 in the payload header for the next L2CAP message. This informs the destination of the flush (see Section 6.6). Flushing will not necessarily result in a change in the SEQN bit value, see the previous section.

The Flush Timeout defines a maximum period after which all segments of the ACL-U packet with a Packet_Boundary_Flag value of 10 are flushed from the Controller buffer. The Flush Timeout shall start when the First segment of the ACL-U packet is stored in the Controller buffer. If the First segment of an ACL-U packet has a Packet_Boundary_Flag value of 00, it is non-automatically-flushable and shall not cause the Flush Timeout to start. After the Flush timeout has expired the Link Controller may continue transmissions according to the procedure described in Section 7.6.2.2 on page 143, however the Baseband Resource Manager shall not continue the transmission of the ACL-U packet to the Link Controller. If the Baseband Resource Manager has further segments of the packet queued for transmission to the Link Controller it shall delete the remaining segments of the ACL-U packet from the queue. In case the complete ACL-U packet was not stored in the Controller buffer yet, any Continuation segments, received for the ACL logical transport, shall be flushed, until a First segment is received. When the complete ACL-U packet has been flushed, the Link Manager shall continue transmission of the next ACL-U packet for the ACL logical transport. The default Flush Timeout shall be infinite, i.e. re-transmissions are carried out until physical link loss occurs. This is also referred to as a 'reliable channel.' All devices shall support the default Flush Timeout. Reliable data shall be sent over a channel with a finite flush timeout by marking reliable packets as non-automatically-flushable.

In eSCO, packets shall be automatically flushed at the end of the eSCO window.

7.6.4 Multi-slave Considerations

In a piconet with multiple logical transports, the master shall carry out the ARQ protocol independently on each logical transport.

7.6.5 Broadcast Packets

Broadcast packets are packets transmitted by the master to all the slaves simultaneously (see Section 8.6.4) If multiple hop sequences are being used each transmission may only be received by some of the slaves. In this case the master shall repeat the transmission on each hop sequence. A broadcast packet shall be indicated by the all-zero LT_ADDR (note; the FHS packet and the extended inquiry response packet are the only packets which may have an all-zero LT_ADDR but are not broadcast packets). Broadcast packets shall not be acknowledged (at least not at the LC level).

Since broadcast messages are not acknowledged, each broadcast packet is transmitted at least a fixed number of times. A broadcast packet should be transmitted N_{BC} times before the next broadcast packet of the same broadcast message is transmitted, see Figure 7.16 on page 147. Optionally, a broadcast packet may be transmitted N_{BC} + 1 times. Note: N_{BC}=1 means that each broadcast packet should be sent only once, but optionally may be sent twice. However, time-critical broadcast information may abort the ongoing broadcast train. For instance, unpark messages sent at beacon instances may do this, see Section 8.9.5.

If multiple hop sequences are being used then the master may transmit on the different hop sequences in any order, providing that transmission of a new broadcast packet shall not be started until all transmissions of any previous broadcast packet have completed on all hop sequences. The transmission of a single broadcast packet may be interleaved among the hop sequences to minimize the total time to broadcast a packet. The master has the option of transmitting only N_{BC} times on channels common to all hop sequences.

Broadcast packets with a CRC shall have their own sequence number. The SEQN of the first broadcast packet with a CRC shall be set to SEQN = 1 by the master and shall be inverted for each new broadcast packet with CRC thereafter. Broadcast packets without a CRC have no influence on the sequence number. The slave shall accept the SEQN of the first broadcast packet it receives in a connection and shall check for change in SEQN for subsequent broadcast packets. Since there is no acknowledgement of broadcast messages and there is no end packet indication, it is important to receive the start packets correctly. To ensure this, repetitions of the broadcast packets that are L2CAP start packets and LMP packets shall not be filtered out. These packets shall be indicated by LLID=1X in the payload header as explained in Table 6.6 on page 128. Only repetitions of the L2CAP continuation packets shall be filtered out.

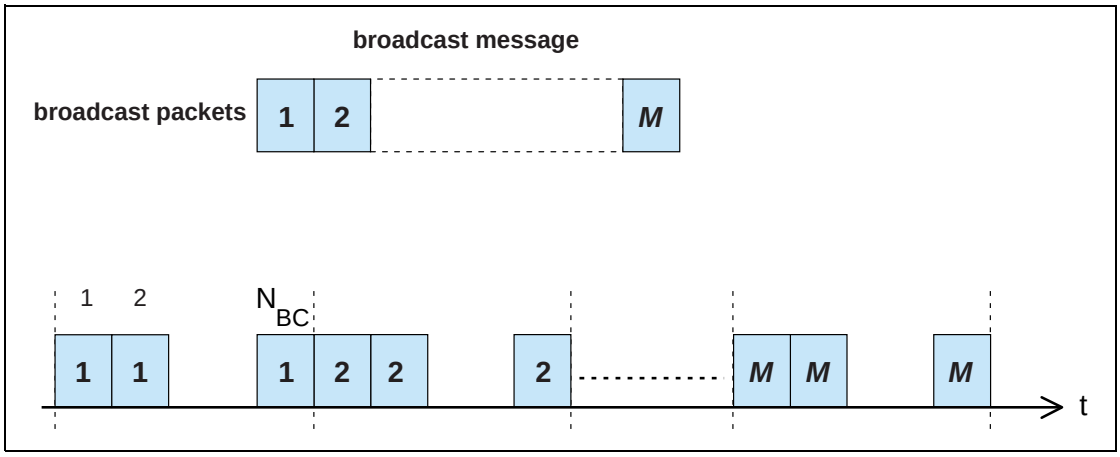

Figure 7.16: Broadcast repetition scheme

7.7 ERRONEOUS SYNCHRONOUS DATA REPORTING

Erroneous data reporting may be enabled for synchronous links. When enabled, synchronous data shall be processed as follows:

- If, during an (e)SCO interval, an eSCO packet was received with valid HEC and valid CRC or a SCO packet was received with valid HEC, the received payload data shall be sent to the upper-edge of the Controller with a "good data" indication.
- If, during an eSCO interval, eSCO packets with valid HEC were received, but none of them had a valid CRC, the best known data available (e.g. data derived from the received data or the actual payload data that was received with a CRC error) shall be sent to the upper-edge of the Controller with a "data with possible errors" indication.
- If, during an (e)SCO interval, no SCO or eSCO packet with valid HEC has been received, a "lost data" indication shall be sent to the upper-edge of the Controller.

8 LINK CONTROLLER OPERATION

This section describes how a piconet is established and how devices can be added to and released from the piconet. Several states of operation of the devices are defined to support these functions. In addition, the operation of several piconets with one or more common members, the scatternet, is discussed.

8.1 OVERVIEW OF STATES

Figure 8.1 on page 148 shows a state diagram illustrating the different states used in the link controller. There are three major states: **STANDBY**, **CONNECTION**, and **PARK**; in addition, there are seven substates, **page**, **page scan**, **inquiry**, **inquiry scan**, **master response**, **slave response**, and **inquiry response**. The substates are interim states that are used to establish connections and enable device discovery. To move from one state or substate to another, either commands from the link manager are used, or internal signals in the link controller are used (such as the trigger signal from the correlator and the timeout signals).

.

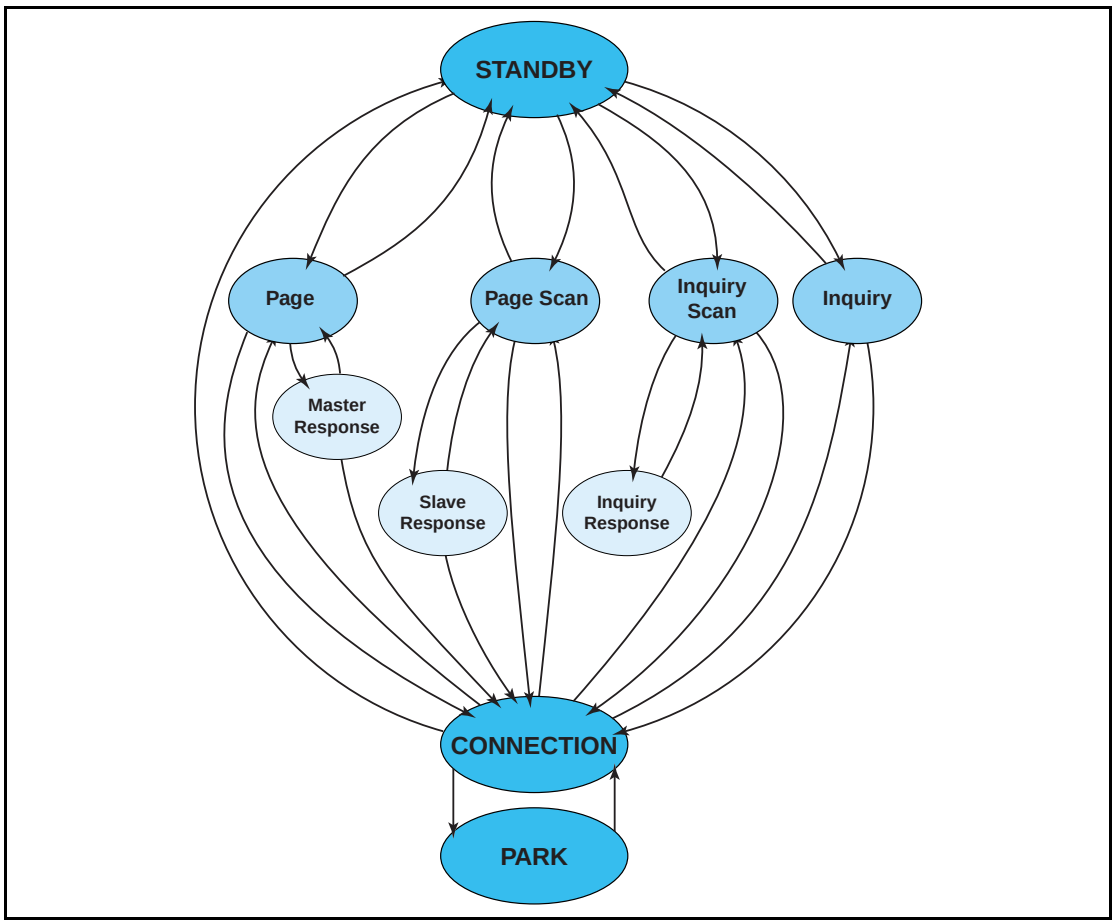

Figure 8.1: State diagram of link controller.

8.2 STANDBY STATE

The **STANDBY** state is the default state in the device. In this state, the device may be in a low-power mode. Only the native clock is running at the accuracy of the LPO (or better).

The controller may leave the **STANDBY** state to scan for page or inquiry messages, or to page or inquiry itself.

8.3 CONNECTION ESTABLISHMENT SUBSTATES

In order to establish new connections the paging procedure is used. Only the Bluetooth device address is required to set up a connection. Knowledge about the clock, obtained from the inquiry procedure (see Section 8.4 on page 158) or from a previous connection with this device, and the page scanning mode of the other device will accelerate the setup procedure. A device that establishes a connection carries out a page procedure and will automatically become the master of the connection.

8.3.1 Page Scan Substate

In the **page scan** substate, a device may be configured to use either the standard or interlaced scanning procedure. During a standard scan, a device listens for the duration of the scan window $T_{w_page_scan}$ (11.25ms default, see HCI [Part E] Section 7.3.20 on page 553), while the interlaced scan is performed as two back to back scans of $T_{w_page_scan}$. If the scan interval is not at least twice the scan window, then interlaced scan shall not be used. During each scan window, the device shall listen at a single hop frequency, its correlator matched to its device access code (DAC). The scan window shall be long enough to completely scan 16 page frequencies.

When a device enters the **page scan** substate, it shall select the scan frequency according to the page hopping sequence determined by the device's Bluetooth device address, see Section 2.6.4.1 on page 90. The phase in the sequence shall be determined by $CLKN_{16\text{-}12}$ of the device's native clock; that is, every 1.28s a different frequency is selected.

In the case of a standard scan, if the correlator exceeds the trigger threshold during the **page scan**, the device shall enter the **slave response** substate described in Section 8.3.3.1 on page 155. The scanning device may also use interlaced scan. In this case, if the correlator does not exceed the trigger threshold during the first scan it shall scan a second time using the phase in the sequence determined by $[CLKN_{16\text{-}12} + 16] \bmod 32$. If on this second scan the correlator exceeds the trigger threshold the device shall enter the **slave response** substate using $[CLKN_{16\text{-}12} + 16] \bmod 32$ as the frozen CLKN* in the calculation for $Spars^{(79)}$, see Section 2.6.4.3 on page 91 for details. If the correlator does not exceed the trigger threshold during a scan in normal mode or

during the second scan in interlaced scan mode it shall return to either the **STANDBY** or **CONNECTION** state.

The **page scan** substate can be entered from the **STANDBY** state or the **CONNECTION** state. In the **STANDBY** state, no connection has been established and the device can use all the capacity to carry out the **page scan**. Before entering the **page scan** substate from the **CONNECTION** state, the device should reserve as much capacity as possible for scanning. If desired, the device may place ACL connections in Hold, Park, or Sniff (see Section 8.8 on page 181 and Section 8.9 on page 182). Synchronous connections should not be interrupted by the page scan, although eSCO retransmissions should be paused during the scan. The page scan may be interrupted by the reserved synchronous slots which should have higher priority than the **page scan**. SCO packets should be used requiring the least amount of capacity (**HV3** packets). The scan window shall be increased to minimize the setup delay. If one SCO logical transport is present using **HV3** packets and T_{SCO}=6 slots or one eSCO logical transport is present using **EV3** packets and T_{ESCO}=6 slots, a total scan window $T_{w\ page\ scan}$ of at least 36 slots (22.5ms) is recommended; if two SCO links are present using **HV3** packets and T_{SCO}=6 slots or two eSCO links are present using **EV3** packets and T_{ESCO}=6 slots, a total scan window of at least 54 slots (33.75ms) is recommended.

The scan interval $T_{page\ scan}$ is defined as the interval between the beginnings of two consecutive page scans. A distinction is made between the case where the scan interval is equal to the scan window $T_{w\ page\ scan}$ (continuous scan), the scan interval is maximal 1.28s, or the scan interval is maximal 2.56s. These three cases shall determine the behavior of the paging device; that is, whether the paging device shall use R0, R1 or R2, see also Section 8.3.2 on page 151. Table 8.1 illustrates the relationship between $T_{page\ scan}$ and modes R0, R1 and R2. Although scanning in the R0 mode is continuous, the scanning may be interrupted for example by reserved synchronous slots. The scan interval information is included in the SR field in the FHS packet.

SR mode	$T_{page\ scan}$
R0	≤ 1.28s and = $T_{w\ page\ scan}$
R1	≤ 1.28s
R2	≤ 2.56s
Reserved	-

Table 8.1: Relationship between scan interval, and paging modes R0, R1, and R2.

8.3.2 Page substate

The **page** substate is used by the master (source) to activate and connect to a slave (destination) in the **page scan** substate. The master tries to coincide with the slave's scan activity by repeatedly transmitting the paging message consisting of the slave's device access code (DAC) in different hop channels. Since the Bluetooth clocks of the master and the slave are not synchronized, the master does not know exactly when the slave wakes up and on which hop frequency. Therefore, it transmits a train of identical page scan messages at different hop frequencies and listens in between the transmit intervals until it receives a response from the slave.

The page procedure in the master consists of a number of steps. First, the Host communicates the BD_ADDR of the slave to the Controller. This BD_ADDR shall be used by the master to determine the page hopping sequence; see Section 2.6.4.2 on page 91. For the phase in the sequence, the master shall use an estimate of the slave's clock. For example, this estimate can be derived from timing information that was exchanged during the last encounter with this particular device (which could have acted as a master at that time), or from an inquiry procedure. With this estimate CLKE of the slave's Bluetooth clock, the master can predict on which hop channel the slave starts page scanning.

The estimate of the Bluetooth clock in the slave can be completely wrong. Although the master and the slave use the same hopping sequence, they use different phases in the sequence and might never select the same frequency. To compensate for the clock drifts, the master shall send its page message during a short time interval on a number of wake-up frequencies. It shall transmit also on hop frequencies just before and after the current, predicted hop frequency. During each TX slot, the master shall sequentially transmit on two different hop frequencies. In the following RX slot, the receiver shall listen sequentially to two corresponding RX hops for an ID packet. The RX hops shall be selected according to the page response hopping sequence. The page response hopping sequence is strictly related to the page hopping sequence: for each page hop there is a corresponding page response hop. The RX/TX timing in the **page** substate is described in Section 2.2.5, see also Figure 2.7 on page 76. In the next TX slot, the master shall transmit on two hop frequencies different from the former ones. Note: The hop rate is increased to 3200 hops/s.

With the increased hopping rate as described above, the transmitter can cover 16 different hop frequencies in 16 slots or 10 ms. The page hopping sequence is divided over two paging trains **A** and **B** of 16 frequencies. Train **A** includes the 16 hop frequencies surrounding the current, predicted hop frequency *f(k)*, where k is determined by the clock estimate $CLKE_{16\text{-}12}$. The first train consists of hops

f(k-8), f(k-7),...,f(k),...,f(k+7)

When the difference between the Bluetooth clocks of the master and the slave is between -8x1.28 s and +7x1.28 s, one of the frequencies used by the master will be the hop frequency the slave will listen to. Since the master does not know when the slave will enter the **page scan** substate, the master has to repeat this train **A** N_{page} times or until a response is obtained, whichever is shorter. If the slave scan interval corresponds to R1, the repetition number is at least 128; if the slave scan interval corresponds to R2 or if the master has not previously read the slave's SR mode, the repetition number is at least 256. If the master has not previously read the slave's SR mode it shall use Npage >= 256. Note that $CLKE_{16-12}$ changes every 1.28 s; therefore, every 1.28 s, the trains will include different frequencies of the page hopping set.

When the difference between the Bluetooth clocks of the master and the slave is less than -8x1.28 s or larger than +7x1.28 s, the remaining 16 hops are used to form the new 10 ms train **B.** The second train consists of hops

f(k-16), f(k-15),...,f(k-9),f(k+8)...,f(k+15)

Train **B** shall be repeated for N_{page} times. If no response is obtained, train **A** shall be tried again N_{page} times. Alternate use of train A and train B shall be continued until a response is received or the timeout *pageTO* is exceeded. If a response is returned by the slave, the master device enters the **master response** substate.

The **page** substate may be entered from the **STANDBY** state or the **CONNECTION** state. In the **STANDBY** state, no connection has been established and the device can use all the capacity to carry out the page. Before entering the **page** substate from the **CONNECTION** state, the device should free as much capacity as possible for paging. To ensure this, it is recommended that the ACL connections are put on hold or park. However, the synchronous connections shall not be disturbed by the page. This means that the page will be interrupted by the reserved SCO and eSCO slots which have higher priority than the page. In order to obtain as much capacity for paging, it is recommended to use the SCO packets which use the least amount of capacity (**HV3** packets). If SCO or eSCO links are present, the repetition number N_{page} of a single train shall be increased, see Table 8.2. Here it has been assumed that the **HV3** packet are used with an interval T_{SCO}=6 slots or **EV3** packets are used with an interval of T_{ESCO}=6 slots, which would correspond to a 64 kb/s synchronous link.

.

SR mode	no synchronous link	one synchronous link (HV3)	two synchronous links (HV3)
R0	$N_{page} \geq 1$	$N_{page} \geq 2$	$N_{page} \geq 3$
R1	$N_{page} \geq 128$	$N_{page} \geq 256$	$N_{page} \geq 384$
R2	$N_{page} \geq 256$	$N_{page} \geq 512$	$N_{page} \geq 768$

Table 8.2: Relationship between train repetition, and paging modes R0, R1 and R2 when synchronous links are present.

The construction of the page train shall be independent of the presence of synchronous links; that is, synchronous packets are sent on the reserved slots but shall not affect the hop frequencies used in the unreserved slots, see Figure 8.2 on page 153.

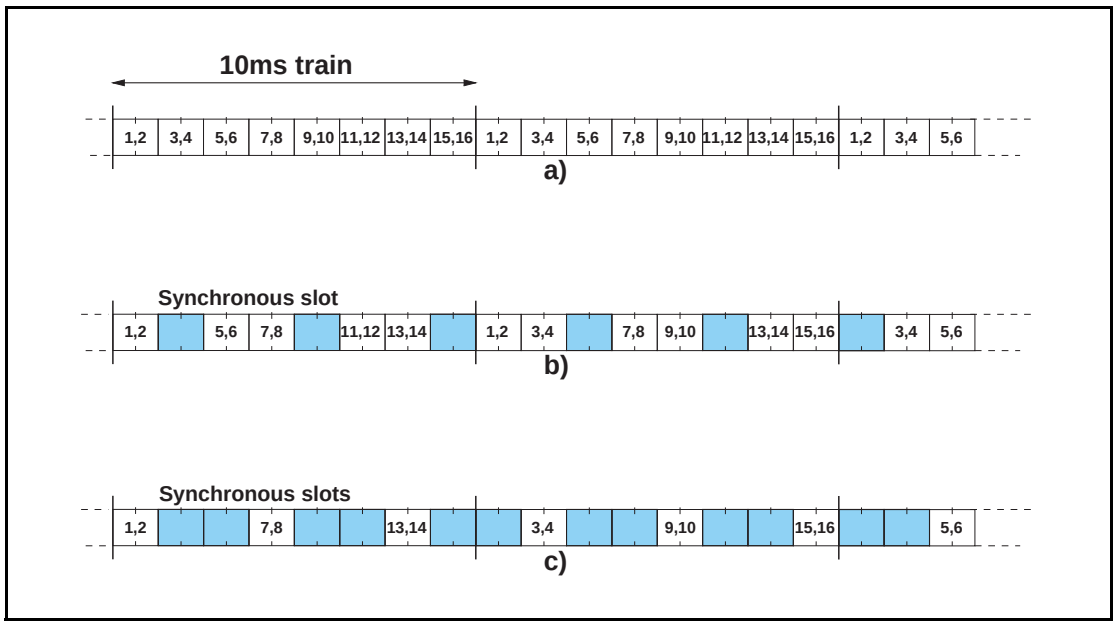

Figure 8.2: Conventional page (a), page while one synchronous link present (b), page while two synchronous links present (c).

8.3.3 Page Response Substates

When a page message is successfully received by the slave, there is a coarse FH synchronization between the master and the slave. Both the master and the slave enter a response substate to exchange vital information to continue the connection setup. It is important for the piconet connection that both devices shall use the same channel access code, use the same channel hopping sequence, and their clocks are synchronized. These parameters shall be derived from the master device. The device that initializes the connection (starts paging) is defined as the master device (which is thus only valid during the time the piconet exists). The channel access code and channel hopping sequence shall be derived from the Bluetooth device address (BD_ADDR) of the master. The timing shall be determined by the master clock. An offset shall be added to the slave's native clock to temporarily synchronize the slave clock to the master clock. At start-up, the master parameters are transmitted from the master to the slave. The messaging between the master and the slave at start-up is specified in this section.

The initial messaging between master and slave is shown in Table 8.3 on page 154 and in Figure 8.3 on page 155 and Figure 8.4 on page 155. In those two figures frequencies f (k), f(k+1), etc. are the frequencies of the page hopping sequence determined by the slave's BD_ADDR. The frequencies f'(k), f'(k+1), etc. are the corresponding page_response frequencies (slave-to-master). The frequencies g(m) belong to the basic channel hopping sequence.

Step	Message	Packet Type	Direction	Hopping Sequence	Access Code and Clock
1	Page	ID	Master to slave	Page	Slave
2	First slave page response	ID	Slave to master	Page response	Slave
3	Master page response	FHS	Master to slave	Page	Slave
4	Second slave page response	ID	Slave to master	Page response	Slave
5	1st packet master	POLL	Master to slave	Channel	Master
6	1st packet slave	Any type	Slave to master	Channel	Master

Table 8.3: Initial messaging during start-up.

In step 1 (see Table 8.3 on page 154), the master device is in **page** substate and the slave device in the **page scan** substate. Assume in this step that the page message sent by the master reaches the slave. On receiving the page message, the slave enters the **slave response** in step 2. The master waits for a reply from the slave and when this arrives in step 2, it shall enter the **master response** in step 3. Note that during the initial message exchange, all parame-

ters are derived from the slave's device address, and that only the page hopping and page response hopping sequences are used (are also derived from the slave's device address). Note that when the master and slave enter the response states, their clock input to the page and page response hop selection is frozen as is described in Section 2.6.4.3 on page 91.

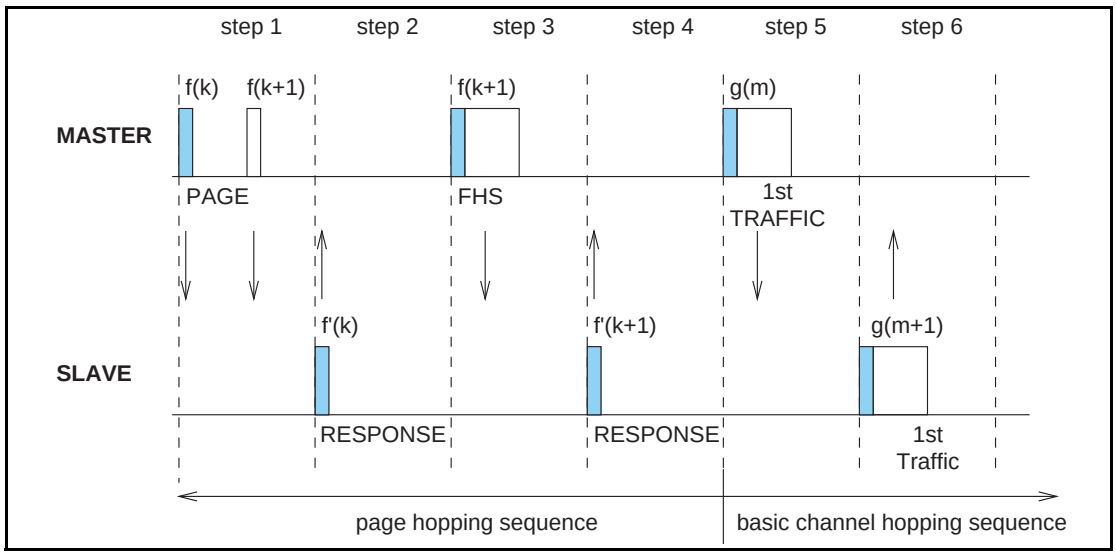

Figure 8.3: Messaging at initial connection when slave responds to first page message.

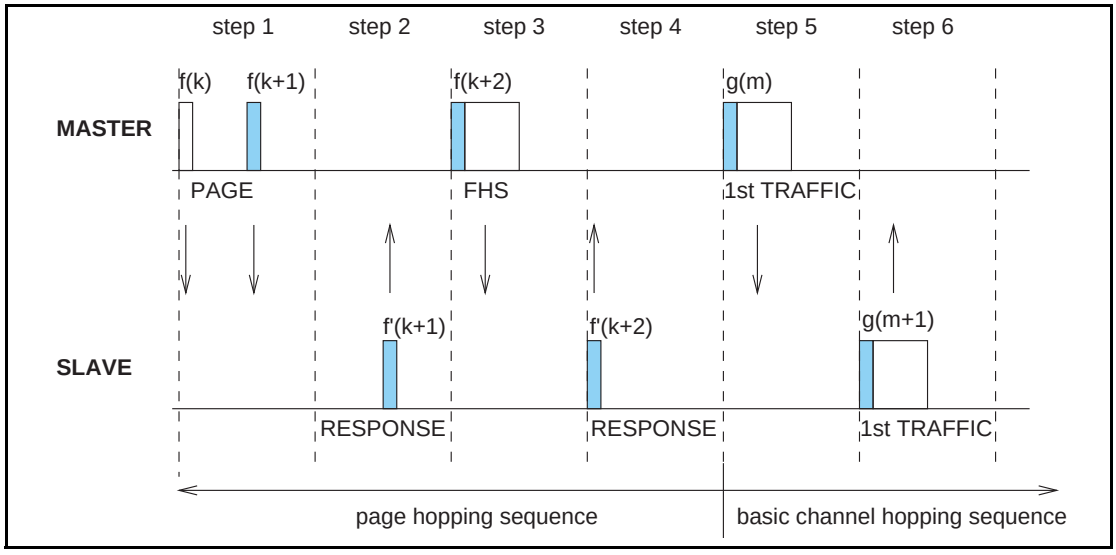

Figure 8.4: Messaging at initial connection when slave responds to second page message.

8.3.3.1 Slave response substate

After having received the page message in step 1, the slave device shall transmit a slave page response message (the slave's device access code) in step 2. This response message shall be the slave's device access code. The slave shall transmit this response 625 μs after the beginning of the received page message and at the response hop frequency that corresponds to the hop fre-

quency in which the page message was received. The slave transmission is therefore time aligned to the master transmission. During initial messaging, the slave shall still use the page response hopping sequence to return information to the master. The clock input $CLKN_{16-12}$ shall be frozen at the value it had at the time the page message was received.

After having sent the response message, the slave's receiver shall be activated 312.5 μs after the start of the response message and shall await the arrival of an **FHS** packet. Note that an **FHS** packet can arrive 312.5 μs after the arrival of the page message as shown in Figure 8.4 on page 155, and not after 625 μs as is usually the case in the piconet physical channel RX/TX timing. More details about the timing can be found in Section 2.4.4 on page 77.

If the setup fails before the **CONNECTION** state has been reached, the following procedure shall be carried out. The slave shall listen as long as no **FHS** packet is received until *pageRespTO* is exceeded. Every 1.25 ms, however, it shall select the next master-to-slave hop frequency according to the page hop sequence. If nothing is received after *pageRespTO*, the slave shall return back to the **page scan** substate for one scan period. Length of the scan period depends on the synchronous reserved slots present. If no page message is received during this additional scan period, the slave shall resume scanning at its regular scan interval and return to the state it was in prior to the first page scan state.

If an **FHS** packet is received by the slave in the **slave response** substate, the slave shall return a slave page response message in step 4 to acknowledge reception of the **FHS** packet. This response shall use the page response hopping sequence. The transmission of the slave page response packet is based on the reception of the **FHS** packet. Then the slave shall change to the master's channel access code and clock as received from the **FHS** packet. Only the 26 MSBs of the master clock are transferred: the timing shall be such that CLK_1 and CLK_0 are both zero at the time the **FHS** packet was received as the master transmits in even slots only. The offset between the master's clock and the slave's clock shall be determined from the master's clock in the **FHS** packet and reported to the slave's Baseband Resource Manager.

Finally, the slave enters the **CONNECTION** state in step 5. From then on, the slave shall use the master's clock and the master's BD_ADDR to determine the basic channel hopping sequence and the channel access code. The slave shall use the LT_ADDR in the **FHS** payload as the primary LT_ADDR in the **CONNECTION** state. The connection mode shall start with a POLL packet transmitted by the master. The slave may respond with any type of packet. If the POLL packet is not received by the slave, or the response packet is not received by the master, within *newconnectionTO* number of slots after FHS packet acknowledgement, the master and the slave shall return to **page** and **page scan** substates, respectively. See Section 8.5 on page 163

8.3.3.2 Master response substate

When the master has received a slave page response message in step 2, it shall enter the **master response** routine. It shall freeze the current clock input to the page hop selection scheme. The master shall then transmit an **FHS** packet in step 3 containing the master's real-time Bluetooth clock, the master's BD_ADDR, the BCH parity bits, and the class of device. The **FHS** packet contains all information to construct the channel access code without requiring a mathematical derivation from the master's Bluetooth device address. The LT_ADDR field in the packet header of FHS packets in the master response substate shall be set to all-zeros. The **FHS** packet shall be transmitted at the beginning of the master-to-slave slot following the slot in which the slave responded. The FHS packet shall carry the all-zero LT_ADDR. The TX timing of the **FHS** is not based on the reception of the response packet from the slave. The **FHS** packet may therefore be sent 312.5 μs after the reception of the response packet like shown in Figure 8.4 on page 155 and not 625 μs after the received packet as is usual in the piconet physical channel RX/TX timing, see also Section 2.4.4 on page 77.

After the master has sent its **FHS** packet, it shall wait for a second slave page response message in step 4 acknowledging the reception of the **FHS** packet. This response shall be the slave's device access code. If no response is received, the master shall retransmit the **FHS** packet with an updated clock and still using the slave's parameters. It shall retransmit the FHS packet with the clock updated each time until a second slave page response message is received, or the timeout of *pagerespTO* is exceeded. In the latter case, the master shall return to the **page** substate and send an error message to the Baseband Resource Manager. During the retransmissions of the **FHS** packet, the master shall use the page hopping sequence.

If the slave's response is received, the master shall change to using the master parameters, so it shall use the channel access code and the master clock. The lower clock bits CLK_0 and CLK_1 shall be reset to zero at the start of the **FHS** packet transmission and are not included in the **FHS** packet. Finally, the master enters the **CONNECTION** state in step 5. The master BD_ADDR shall be used to change to a new hopping sequence, the *basic channel hopping sequence*. The basic channel hopping sequence uses all 79 hop channels in a pseudo-random fashion, see also Section 2.6.4.7 on page 93. The master shall now send its first traffic packet in a hop determined with the new (master) parameters. This first packet shall be a POLL packet. See Section 8.5 on page 163. This packet shall be sent within *newconnectionTO* number of slots after reception of the FHS packet acknowledgement. The slave may respond with any type of packet. If the POLL packet is not received by the slave or the POLL packet response is not received by the master within *newconnectionTO* number of slots, the master and the slave shall return to **page** and **page scan** substates, respectively.

8.4 DEVICE DISCOVERY SUBSTATES

In order to discover other devices a device shall enter **inquiry** substate. In this substate, it shall repeatedly transmit the inquiry message (ID packet, see Section 6.5.1.1 on page 116) at different hop frequencies. The **inquiry** hop sequence is derived from the LAP of the GIAC. Thus, even when DIACs are used, the applied hopping sequence is generated from the GIAC LAP. A device that allows itself to be discovered, shall regularly enter the **inquiry scan** substate to respond to inquiry messages. The following sections describe the message exchange and contention resolution during inquiry response. The inquiry response is optional: a device is not forced to respond to an inquiry message.

During the **inquiry** substate, the discovering device collects the Bluetooth device addresses and clocks of all devices that respond to the inquiry message. In addition, the discovering device also collects extended information (e.g. local name and supported services) from devices that respond with an extended inquiry response packet. It can then, if desired, make a connection to any one of the discovered devices by means of the previously described page procedure.

The inquiry message broadcast by the source does not contain any information about the source. However, it may indicate which class of devices should respond. There is one general inquiry access code (GIAC) to inquire for any device, and a number of dedicated inquiry access codes (DIAC) that only inquire for a certain type of device. The inquiry access codes are derived from reserved Bluetooth device addresses and are further described in Section 6.3.1.

8.4.1 Inquiry scan substate

The **inquiry scan** substate is very similar to the **page scan** substate. However, instead of scanning for the device's device access code, the receiver shall scan for the inquiry access code long enough to completely scan for 16 inquiry frequencies. Two types of scans are defined: standard and interlaced. In the case of a standard scan the length of this scan period is denoted $T_{w_inquiry_scan}$ (11.25ms default, see HCI [Part E] Section 7.3.22 on page 556). The standard scan is performed at a single hop frequency as defined by Xir_{4-0} (see Section 2.6.4.6 on page 93). The interlaced scan is performed as two back to back scans of $T_{w_inquiry_scan}$ where the first scan is on the normal hop frequency and the second scan is defined by $[Xir_{4-0} + 16] \bmod 32$. If the scan interval is not at least twice the scan window then interlaced scan shall not be used. The inquiry procedure uses 32 dedicated inquiry hop frequencies according to the inquiry hopping sequence. These frequencies are determined by the general inquiry address. The phase is determined by the native clock of the device carrying out the **inquiry scan**; the phase changes every 1.28s.

Instead of, or in addition to, the general inquiry access code, the device may scan for one or more dedicated inquiry access codes. However, the scanning shall follow the inquiry scan hopping sequence determined by the general inquiry address. If an inquiry message is received during an inquiry wake-up period, the device shall enter the **inquiry response** substate.

The **inquiry scan** substate can be entered from the **STANDBY** state or the **CONNECTION** state. In the **STANDBY** state, no connection has been established and the device can use all the capacity to carry out the **inquiry scan**. Before entering the **inquiry scan** substate from the **CONNECTION** state, the device should reserve as much capacity as possible for scanning. If desired, the device may place ACL logical transports in Sniff, Hold, or Park. Synchronous logical transports are preferably not interrupted by the **inquiry scan**, although eSCO retransmissions should be paused during the scan. In this case, the **inquiry scan** may be interrupted by the reserved synchronous slots. SCO packets should be used requiring the least amount of capacity (**HV3** packets). The scan window, $T_{w\ inquiry\ scan}$, shall be increased to increase the probability to respond to an inquiry message. If one SCO logical transport is present using HV3 packets and T_{SCO}=6 slots or one eSCO logical transport is present using EV3 packets and T_{ESCO}=6 slots, a total scan window of at least 36 slots (22.5ms) is recommended; if two SCO links are present using HV3 packets and T_{SCO}=6 slots or two eSCO links are present using EV3 packets and T_{ESCO}=6 slots, a total scan window of at least 54 slots (33.75ms) is recommended.

The scan interval $T_{inquiry\ scan}$ is defined as the interval between two consecutive inquiry scans. The **inquiry scan** interval shall be less than or equal to 2.56 s.

8.4.2 Inquiry Substate

The **inquiry** substate is used to discover new devices. This substate is very similar to the **page** substate; the TX/RX timing shall be the same as in paging, see Section 2.4.4 on page 77 and Figure 2.7 on page 76. The TX and RX frequencies shall follow the inquiry hopping sequence and the inquiry response hopping sequence, and are determined by the general inquiry access code and the native clock of the discovering device. In between inquiry transmissions, the receiver shall scan for inquiry response messages. When a response is received, the entire packet (an FHS packet) shall be read. If the EIR bit in the FHS packet is set to one, the device should try to receive the extended inquiry response packet 1250μs after the start of the FHS packet. After this, the device shall continue with inquiry transmissions. The device in an **inquiry** substate shall not acknowledge the inquiry response messages. If enabled by the Host (see HCI [Part E] Section 7.3.50 on page 587), the RSSI value of the inquiry response message shall be measured. It shall keep probing at different hop channels and in between listening for response packets. As in the **page** substate, two 10 ms trains **A** and **B** are defined, splitting the 32 frequencies of the inquiry hopping sequence into two 16-hop parts. A single train shall be repeated for at least $N_{inquiry}$=256 times before a new train is used. In order to collect all responses in an error-free environment, at least three train switches must have taken place. As a result, the **inquiry** substate may have to last for 10.24 s unless the inquirer collects enough responses and aborts the **inquiry** substate earlier. If desired, the inquirer may also prolong the **inquiry** substate to increase the probability of receiving all responses in an error-prone environment. If an inquiry procedure is automatically initiated periodically (say a 10 s period every minute), then the interval between two inquiry instances shall be determined randomly. This is done to avoid two devices synchronizing their inquiry procedures.

The **inquiry** substate is continued until stopped by the Baseband Resource Manager (when it decides that it has sufficient number of responses), when a timeout has been reached (*inquiryTO*), or by a command from the host to cancel the inquiry procedure.

The **inquiry** substate can be entered from the **STANDBY** state or the **CONNECTION** state. In the **STANDBY** state, no connection has been established and the device can use all the capacity to carry out the inquiry. Before entering the **inquiry** substate from the **CONNECTION** state, the device should free as much capacity as possible for scanning. To ensure this, it is recommended that the ACL logical transports are placed in Sniff, Hold, or Park. However, the reserved slots of synchronous logical transports shall not be disturbed by the inquiry. This means that the inquiry will be interrupted by the reserved SCO and eSCO slots which have higher priority than the inquiry. In order to obtain as much capacity as possible for inquiry, it is recommended to use the SCO packets which use the least amount of capacity (**HV3** packets). If SCO or eSCO links are present, the repetition number $N_{inquiry}$ shall be increased, see Table 8.4 on page 161.

Here it has been assumed that **HV3** packets are used with an interval T_{SCO}=6 slots or **EV3** packets are used with an interval of T_{ESCO}=6 slots, which would correspond to a 64 kb/s synchronous link.

	No synchronous links	One synchronous link (HV3)	Two synchronous links (HV3)
$N_{inquiry}$	≥ 256	≥ 512	≥ 768

Table 8.4: Increase of train repetition when synchronous links are present.

If an extended inquiry response packet could not be received because of higher priority traffic, the reception failed due to HEC or CRC failure, or because the packet type is not supported by the device, the inquiry response shall be reported to higher layers as an extended inquiry response with all-zero data.

8.4.3 Inquiry Response Substate

The slave response substate for inquiries differs completely from the slave response substate applied for pages. When the inquiry message is received in the inquiry scan substate, the recipient shall return an inquiry response (FHS) packet containing the recipient's device address (BD_ADDR) and other parameters. If the recipient has non-zero extended inquiry response data to send it shall return an extended inquiry response packet after the FHS packet.

The following protocol in the slave's **inquiry response** shall be used. On the first inquiry message received in the inquiry scan substate the slave shall enter the inquiry response substate. If the slave has non-zero extended inquiry response data to send it shall return an FHS packet with the EIR bit set to one to the master 625µs after the inquiry message was received. It shall then return an extended inquiry response packet 1250µs after the start of the FHS packet. If the slave's extended inquiry response data is all zeroes the slave shall only return an FHS packet with the EIR bit set to zero. A contention problem could arise when several devices are in close proximity to the inquiring device and all respond to an inquiry message at the same time. However, because every device has a free running clock it is highly unlikely that they all use the same phase of the inquiry hopping sequence. In order to avoid repeated collisions between devices that wake up in the same inquiry hop channel simultaneously, a device shall back-off for a random period of time. Thus, if the device receives an inquiry message and returns an FHS packet, it shall generate a random number, RAND, between 0 and MAX_RAND. For scanning intervals ≥ 1.28s MAX_RAND shall be 1023, however, for scanning intervals < 1.28s MAX_RAND may be as small as 127. A profile that uses a special DIAC may choose to use a smaller MAX_RAND than 1023 even when the scanning interval is ≥ 1.28s. The slave shall return to the **CONNECTION** or **STANDBY** state for the duration of at least RAND time slots. Before returning to the **CONNECTION** and **STANDBY** state, the device may go through the **page scan** substate. After at least RAND slots, the device shall add an offset of 1 to the phase

in the inquiry hop sequence (the phase has a 1.28 s resolution) and return to the **inquiry scan** substate again. If the slave is triggered again, it shall repeat the procedure using a new RAND. The offset to the clock accumulates each time an **FHS** packet is returned. During a probing window, a slave may respond multiple times, but on different frequencies and at different times. Reserved synchronous slots should have priority over response packets; that is, if a response packet overlaps with a reserved synchronous slot, it shall not be sent but the next inquiry message is awaited. If a device has extended inquiry response data to send but the extended inquiry response packet overlaps with a reserved synchronous slot the FHS packet may be sent with the EIR bit set to zero.

The messaging during the inquiry routines is summarized in Table 8.5 on page 163. In step 1, the master transmits an inquiry message using the inquiry access code and its own clock. The slave responds with the **FHS** packet containing the slave's Bluetooth device address, native clock and other slave information. This **FHS** packet is returned at times that tend to be random. The **FHS** packet is not acknowledged in the inquiry routine, but it is retransmitted at other times and frequencies as long as the master is probing with inquiry messages. If the slave has non-zero extended inquiry response data it sends an extended inquiry response packet to the master in step 3.

The extended inquiry response packet is an ACL packet with type DM1, DM3, DM5, DH1, DH3 or DH5. To minimize interference it is recommended to use the shortest packet that fits the data. The packet shall be sent on the same frequency as the FHS packet, 1250 µs after the start of the FHS packet. In the packet header, LT_ADDR shall be set to zero. TYPE shall be one of DM1, DM3, DM5, DH1, DH3 or DH5. FLOW, ARQN and SEQN shall all be set to zero and ignored during receipt. The HEC LFSR shall be initialized with the same DCI (default check initialization) as for the FHS packet. In the payload header, LLID shall contain the value 10 (start of an L2CAP message or no fragmentation). FLOW shall be set to zero and ignored upon receipt. The length of the payload body (LENGTH) shall be smaller than or equal to 240 bytes. The CRC LFSR shall be initialized with the same DCI as for the FHS packet. The data whitening LFSR shall be initialized with the same value as for the FHS packet.

The payload data has two parts, a significant part followed by a non-significant part. The significant part contains a sequence of data structures as defined in [Vol. 3, Part C] Section 8 on page 316. The non-significant part contains all-zero octets.

The baseband shall not change any octets in the significant part. When transmitting data, the non-significant part octets may be omitted from the payload.

A device shall store a single extended inquiry response packet. This packet shall be used with all IACs.

Step	Message	Packet Type	Direction	Hopping Sequence	Access Code and Clock
1	Inquiry	ID	master to slave	inquiry	inquiry
2	Inquiry response	FHS	slave to master	inquiry response	inquiry
3	Extended Inquiry Response	DM1, DM3, DM5, DH1, DH3, DH5	slave to master	inquiry response *	inquiry

Table 8.5: Messaging during inquiry routines.

* The extended inquiry response packet is sent on the same frequency as the inquiry response (FHS) packet.

8.5 CONNECTION STATE

In the **CONNECTION** state, the connection has been established and packets can be sent back and forth. In both devices, the channel (master) access code, the master's Bluetooth clock, and the AFH_channel_map are used. **CONNECTION** state uses the *basic* or *adapted channel hopping sequence*.

The **CONNECTION** state starts with a POLL packet sent by the master to verify the switch to the master's timing and channel frequency hopping. The slave may respond with any type of packet. If the slave does not receive the POLL packet or the master does not receive the response packet for *newconnectionTO* number of slots, both devices shall return to **page**/**page scan** substates.

The first information packets in the **CONNECTION** state contain control messages that characterize the link and give more details regarding the devices. These messages are exchanged between the link managers of the devices. For example, they may define the SCO logical transport and the sniff parameters. Then the transfer of user information can start by alternately transmitting and receiving packets.

The **CONNECTION** state is left through a **detach** or **reset** command. The **detach** command is used if the link has been disconnected in the normal way; all configuration data in the link controller shall remain valid. The **reset** command is a soft reset of the link controller. The functionality of the soft reset is described in [Part E] Section 7.3.2 on page 528.

In the **CONNECTION** state, if a device is not going to be nominally present on the channel at all times it may describe its unavailability by using sniff mode or hold mode (see Figure 8.5 on page 164).

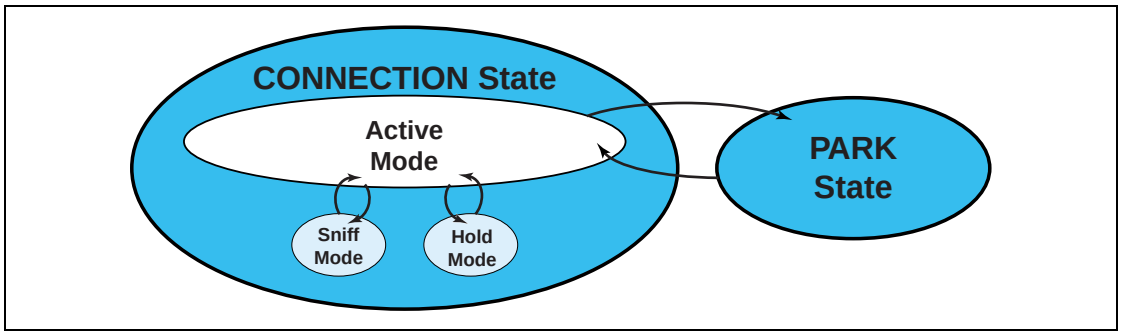

Figure 8.5: Connection state.

8.6 ACTIVE MODE

In the active mode, both master and slave actively participate on the channel. Up to seven slaves may be in the active mode at any given time in a piconet. The master schedules the transmission based on traffic demands to and from the different slaves. In addition, it supports regular transmissions to keep slaves synchronized to the channel. Slaves in the active mode listen in the master-to-slave slots for packets. These devices are known as *active slaves*. If an active slave is not addressed, it may sleep until the next new master transmission. Slaves can derive the number of slots the master has reserved for transmission from the TYPE field in the packet header; during this time, the non-addressed slaves do not have to listen on the master-to-slave slots. When a device is participating in multiple piconets it should listen in the master-to-slave slot for the current piconet. It is recommended that a device not be away from each piconet in which it is participating for more than T_{poll} slots. A periodic master transmission is required to keep the slaves synchronized to the channel. Since the slaves only need the channel access code to synchronize, any packet type can be used for this purpose.

Only the slave that is addressed by one of its LT_ADDRs (primary or secondary) may return a packet in the next slave-to-master slot. If no valid packet header is received, the slave may only respond in its reserved SCO or eSCO slave-to-master slot. In the case of a broadcast message, no slave shall return a packet (an exception is the access window for access requests in the **PARK** state, see Section 8.9 on page 182).

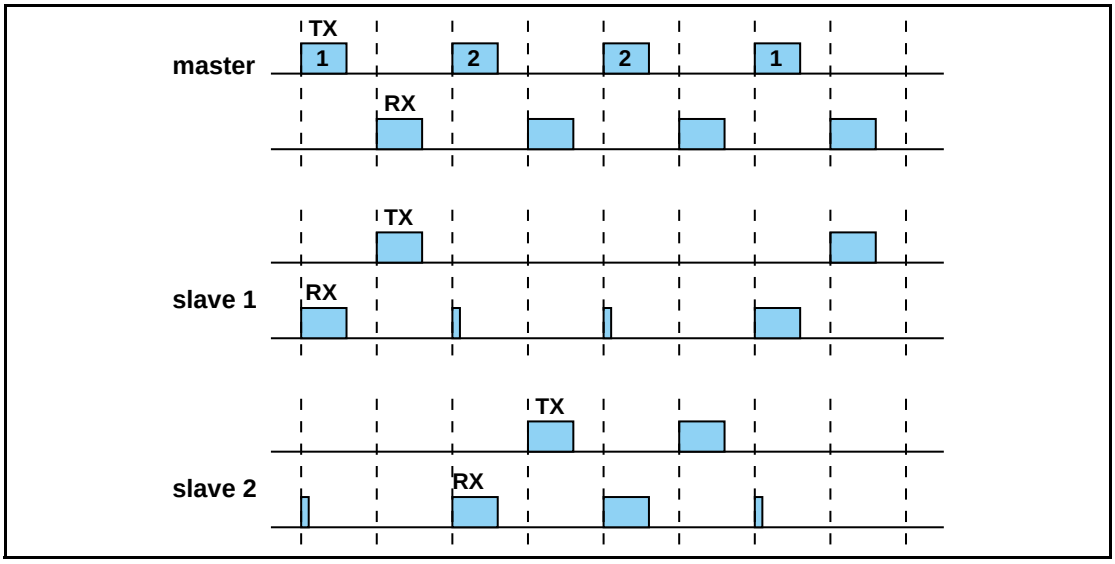

Figure 8.6: RX/TX timing in multi-slave configuration

For ACL logical transports the mode selection may be left to real time packet type selections. The packet type table (ptt) in section 6.5 allows the selection of Basic Rate or Enhanced Data Rate for each of the packet type codes, however; the DM1 packet is available in all packet type tables. ACL traffic over this given physical or logical link shall utilize the packet types in the given column of Packets defined for synchronous and asynchronous logical transport types.

8.6.1 Polling in the Active Mode

The master always has full control over the piconet. Due to the TDD scheme, slaves can only communicate with the master and not other slaves. In order to avoid collisions on the ACL logical transport, a slave is only allowed to transmit in the slave-to-master slot when addressed by the LT_ADDR in the packet header in the preceding master-to-slave slot. If the LT_ADDR in the preceding slot does not match, or a valid packet header was not received, the slave shall not transmit.

The master normally attempts to poll a slave's ACL logical transport no less often than once every T_{poll} slots. T_{poll} is set by the Link Manager (see [Part C] Section 4.1.8 on page 238).

The slave's ACL logical transport may be polled with any packet type except for FHS and ID. For example, polling during SCO may use HV packets, since the slave may respond to an HV packet with a DM1 packet (see Section 8.6.2 on page 165).

8.6.2 SCO

The SCO logical transport shall be established by the master sending a SCO setup message via the LM protocol. This message contains timing parameters

including the SCO interval T_{SCO} and the offset D_{SCO} to specify the reserved slots.

In order to prevent clock wrap-around problems, an initialization flag in the LMP setup message indicates whether initialization procedure 1 or 2 is being used. The slave shall apply the initialization method as indicated by the initialization flag. The master shall use initialization 1 when the MSB of the current master clock (CLK_{27}) is 0; it shall use initialization 2 when the MSB of the current master clock (CLK_{27}) is 1. The master-to-slave SCO slots reserved by the master and the slave shall be initialized on the slots for which the clock satisfies the applicable equation:

$$CLK_{27-1} \bmod T_{SCO} = D_{SCO} \qquad \text{for initialization 1}$$

$$(\overline{CLK}_{27}, CLK_{26-1}) \bmod T_{SCO} = D_{SCO} \qquad \text{for initialization 2}$$

The slave-to-master SCO slots shall directly follow the reserved master-to-slave SCO slots. After initialization, the clock value CLK(k+1) for the next master-to-slave SCO slot shall be derived by adding the fixed interval T_{SCO} to the clock value of the current master-to-slave SCO slot:

$$CLK(k+1) = CLK(k) + T_{SCO}$$

The master will send SCO packets to the slave at regular intervals (the SCO interval T_{SCO} counted in slots) in the reserved master-to-slave slots. An HV1 packet can carry 1.25ms of speech at a 64 kb/s rate. An HV1 packet shall therefore be sent every two time slots (T_{SCO}=2). An HV2 packet can carry 2.5ms of speech at a 64 kb/s rate. An HV2 packet shall therefore be sent every four time slots (T_{SCO}=4). An HV3 packet can carry 3.75ms of speech at a 64 Kobe/s rate. An HV3 packet shall therefore be sent every six time slots (T_{SCO}=6).

The slave is allowed to transmit in the slot reserved for its SCO logical transport unless the (valid) LT_ADDR in the preceding slot indicates a different slave. If no valid LT_ADDR can be derived in the preceding slot, the slave may still transmit in the reserved SCO slot.

Since the DM1 packet is recognized on the SCO logical transport, it may be sent during the SCO reserved slots if a valid packet header with the primary LT_ADDR is received in the preceding slot. DM1 packets sent during SCO reserved slots shall only be used to send ACL-C data.

The slave shall not transmit anything other than an HV packet in a reserved SCO slot unless it decodes its own slave address in the packet header of the packet in the preceding master-to-slave transmission slot.

8.6.3 eSCO

The eSCO logical transport is established by the master sending an eSCO setup message via the LM protocol. This message contains timing parameters including the eSCO interval T_{ESCO} and the offset D_{ESCO} to specify the reserved slots.

To enter eSCO, the master or slave shall send an eSCO setup command via the LM protocol. This message shall contain the eSCO interval T_{ESCO} and an offset D_{ESCO}. In order to prevent clock wrap-around problems, an initialization flag in the LMP setup message indicates whether initialization procedure 1 or 2 shall be used. The initiating device shall use initialization 1 when the MSB of the current master clock (CLK_{27}) is 0; it shall use initialization 2 when the MSB of the current master clock (CLK_{27}) is 1. The responding device shall apply the initialization method as indicated by the initialization flag. The master-to-slave eSCO slots reserved by the master and the slave shall be initialized on the slots for which the clock satisfies the applicable equation:

$$CLK_{27-1} \bmod T_{ESCO} = D_{ESCO} \qquad \text{for initialization 1}$$

$$(\overline{CLK_{27}}, CLK_{26-1}) \bmod T_{ESCO} = D_{ESCO} \qquad \text{for initialization 2}$$

The slave-to-master eSCO slots shall directly follow the reserved master-to-slave eSCO slots. After initialization, the clock value CLK(k+1) for the next master-to-slave eSCO slot shall be found by adding the fixed interval T_{ESCO} to the clock value of the current master-to-slave eSCO slot:

$$CLK(k+1) = CLK(k) + T_{ESCO}$$

When an eSCO logical transport is established, the master shall assign an additional LT_ADDR to the slave. This provides the eSCO logical transport with an ARQ scheme that is separate from that of the ACL logical transport. All traffic on a particular eSCO logical transport, and only that eSCO traffic, is carried on the eSCO LT_ADDR. The eSCO ARQ scheme uses the ARQN bit in the packet header, and operates similarly to the ARQ scheme on ACL links.

There are two different polling rules in eSCO. In the eSCO reserved slots, the polling rule is the same as to the SCO reserved slots. The master may send a packet in the master slot. The slave may transmit on the eSCO LT_ADDR in the following slot either if it received a packet on the eSCO LT_ADDR in the previous slot, or if it did not receive a valid packet header in the previous slot. When the master-to-slave packet type is a three-slot packet, the slave's transmit slot is the fourth slot of the eSCO reserved slots. A master shall transmit in an eSCO retransmission window on a given eSCO LT_ADDR only if it addressed that eSCO LT_ADDR in the immediately preceding eSCO reserved slots. A slave may transmit on an eSCO LT_ADDR in the eSCO reserved slots only if the slave did not received a valid packet header with a different LT_ADDR in the eSCO reserved slots. Inside retransmission windows, the

same polling rule as for ACL traffic is used: the slave shall transmit on the eSCO channel only if it received a valid packet header and correct LT_ADDR on the eSCO channel in the previous master-to-slave transmission slot. The master may transmit on any non-eSCO LT_ADDR in any master-to-slave transmission slot inside the eSCO retransmission window. The master shall only transmit on an eSCO LT_ADDR in the retransmission window if there are enough slots left for both the master and slave packets to complete in the retransmission window. The master may refrain from transmitting in any slot during the eSCO retransmission window. When there is no data to transmit from master to slave, either due to the traffic being unidirectional or due to the master-to-slave packet having been ACK'ed, the master shall use the POLL packet. When the master-to-slave packet has been ACK'ed, and the slave-to-master packet has been correctly received, the master shall not address the slave on the eSCO LT_ADDR until the next eSCO reserved slot, with the exception that the master may transmit a NULL packet with ARQN=ACK on the eSCO LT_ADDR. When there is no data to transmit from slave to master, either due to the traffic being unidirectional or due to the slave-to-master packet having been ACK'ed, the slave shall use NULL packets. eSCO traffic should be given priority over ACL traffic in the retransmission window.

Figure 8.7 on page 168 shows the eSCO window when single slot packets are used.

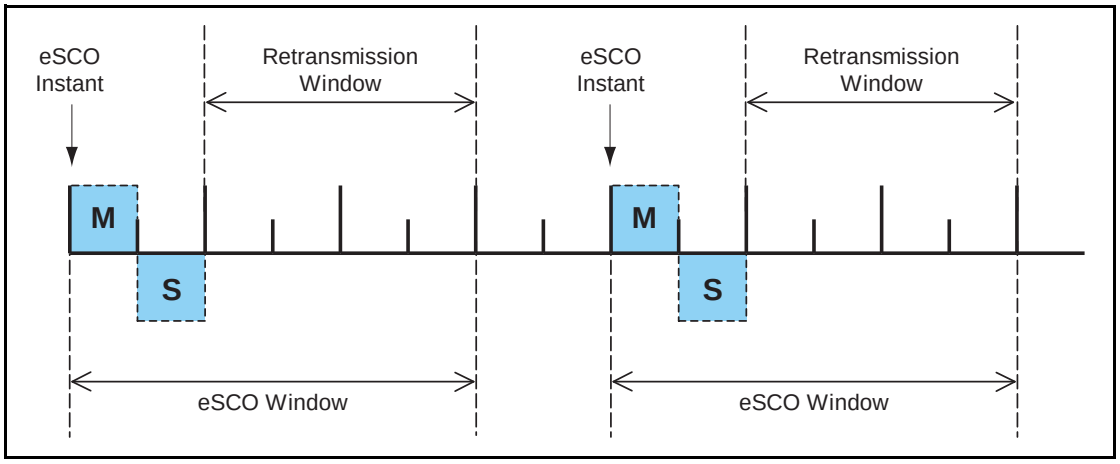

Figure 8.7: eSCO Window Details for Single-Slot Packets

When multi-slot packets are used in either direction of the eSCO logical transport, the first transmission continues into the following slots. The retransmission window in this case starts the slot after the end of the slave-to-master packet, i.e. two, four or six slots immediately following the eSCO instant are reserved and should not be used for other traffic. Figure 8.8 on page 169 shows the eSCO window when multi-slot packets are used in one direction and single-slot packets are used in the other direction.

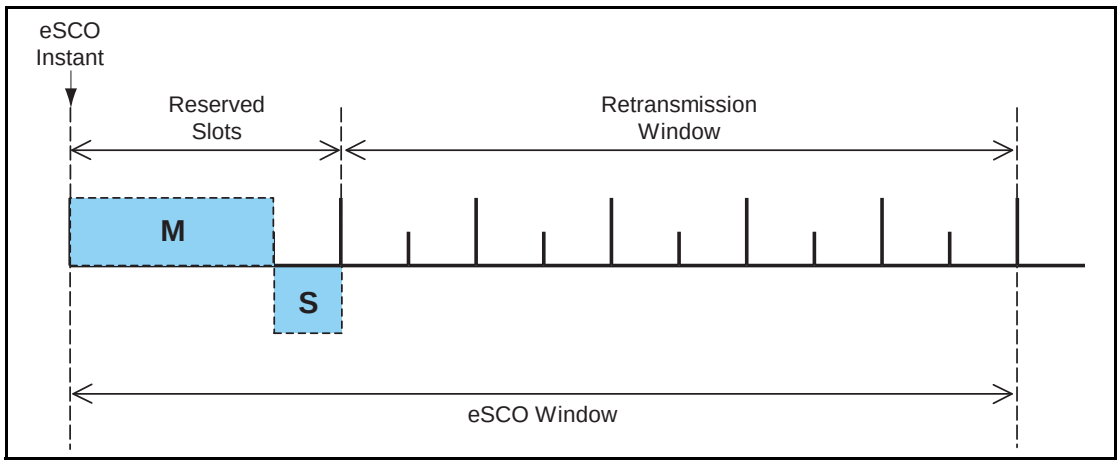

Figure 8.8: eSCO Window Details for Asymmetric Traffic

eSCO windows may overlap on the master, but shall not overlap on an individual slave.

In the reserved slots both master and slave shall only listen and transmit at their allocated slots at the first transmission time of each eSCO window. Intermittent lapses due to, for instance, time-critical signaling during connection establishment are allowed. Both master and slave may refrain from sending data and may use instead POLL and NULL packets respectively. When the master transmits a POLL packet instead of an EV4 or EV5 packet the slave shall transmit starting in the same slot as if the master transmitted an EV4 or EV5 packet. If the slave does not receive anything in the reserved master-to-slave transmission slot it shall transmit in the same slot as if the master had transmitted the negotiated packet type. For example, if the master had negotiated an EV5 packet the slave would transmit three slots later. [If the master does not receive a slave transmission in response to an eSCO packet it causes an implicit NAK of the packet in question. The listening requirements for the slave during the retransmission window are the same as for an active ACL logical transport.

8.6.4 Broadcast Scheme

The master of the piconet can broadcast messages to all slaves on the ASB-U, PSB-C, and PSB-U logical transports. A broadcast packet shall have an LT_ADDR set to all zero. Each new broadcast message (which may be carried by a number of packets) shall start with the start of L2CAP message indication (LLID=10).

The Broadcast LT_ADDR shall use a ptt=0.

A broadcast packet shall never be acknowledged. In an error-prone environment, the master may carry out a number of retransmissions to increase the probability for error-free delivery, see also Section 7.6.5 on page 146.

In order to support the **PARK** state (as described in Section 8.9 on page 182), a master transmission shall take place at fixed intervals. This master transmission will act as a beacon to which slaves can synchronize. If no traffic takes place at the beacon event, broadcast packets shall be sent. More information is given in Section 8.9 on page 182.

8.6.5 Role Switch

There are several occasions when a role switch is used.

- a role switch is necessary when joining an existing piconet by paging, since by definition, the paging device is initially master of a "small" piconet only involving the pager (master) and the paged (slave) device.
- a role switch is necessary in order for a slave in an existing piconet to set up a new piconet with itself as master and the original piconet master as slave. If the original piconet had more than one slave, then this implies a double role for the original piconet master; it becomes a slave in the new piconet while still maintaining the original piconet as master.

Prior to the role switch, encryption if present, shall be paused or disabled in the old piconet. A role switch shall not be performed if the physical link is in Sniff or Hold mode, in the **PARK** state, or has any synchronous logical transports.

For the master and slave involved in the role switch, the switch results in a reversal of their TX and RX timing: a TDD switch. Additionally, since the piconet parameters are derived from the Bluetooth device address and clock of the master, a role switch inherently involves a redefinition of the piconet as well: a piconet switch. The new piconet's parameters shall be derived from the former slave's device address and clock.

Assume device A is to become master; device B was the former master. Then there are two alternatives: either the slave initiates the role switch or the master initiates the role switch. These alternatives are described in Link Manager Protocol, [Part C] Section 4.4.2 on page 279. The baseband procedure is the same regardless of which alternative is used.

In step 1, the slave A and master B shall perform a TDD switch using the former hopping scheme (still using the Bluetooth device address and clock of device B), so there is no piconet switch yet. The slot offset information sent by slave A shall not be used yet but shall be used in step 3. Device A now becomes the master, device B the slave. The LT_ADDR formerly used by device A in its slave role, shall now be used by slave B.

At the moment of the TDD switch, both devices A and B shall start a timer with a time out of *newconnectionTO*. The timer shall be stopped in slave B as soon as it receives an FHS packet from master A on the TDD-switched channel. The timer shall be stopped in master A as soon as it receives an ID packet from slave B. If the *newconnectionTO* expires, the master and slave shall return to the old piconet timing and AFH state, taking their old roles of master and slave. The FHS packet shall be sent by master A using the "old" piconet parameters.

The LT_ADDR in the FHS packet header shall be the former LT_ADDR used by device A. The LT_ADDR carried in the FHS payload shall be the new LT_ADDR intended for device B when operating on the new piconet. After the FHS acknowledgment, which is the ID packet and shall be sent by the slave on the old hopping sequence, both master A and slave B shall use the new channel parameters of the new piconet as indicated by the FHS with the sequence selection set to *basic channel hopping sequence*. If the new master has physical links that are *AFH enabled*, following the piconet switch the new master is responsible for controlling the AFH operational mode of its new slave.

Since the old and new masters' clocks are synchronized, the clock information sent in the FHS payload shall indicate the new master's clock at the beginning of the FHS packet transmission. Furthermore, the 1.25 ms resolution of the clock information given in the FHS packet is not sufficient for aligning the slot boundaries of the two piconets. The slot-offset information in the LMP message previously sent by device A shall be used to provide more accurate timing information. The slot offset indicates the delay between the start of the master-to-slave slots of the old and new piconet channels. This timing information ranges from 0 to 1249 μs with a resolution of 1μs. It shall be used together with the clock information in the FHS packet to accurately position the correlation window when switching to the new master's timing after acknowledgment of the FHS packet.

After reception of the FHS packet acknowledgment, the new master A shall switch to its own timing with the sequence selection set to the *basic channel hopping sequence* and shall send a POLL packet to verify the switch. Both the master and the slave shall start a new timer with a time out of *newconnectionTO* on FHS packet acknowledgment. The start of this timer shall be aligned with the beginning of the first master TX slot boundary of the new piconet, following the FHS packet acknowledgment. The slave shall stop the timer when the POLL packet is received; the master shall stop the timer when the POLL packet is acknowledged. The slave shall respond with any type of packet to acknowledge the POLL. Any pending AFH_Instant shall be cancelled once the POLL packet has been received by the slave. If no response is received, the master shall re-send the POLL packet until *newconnectionTO* is reached. If this timer expires, both the slave and the master shall return to the old piconet timing with the old master and slave roles. Expiry of the timer shall also restore the state associated with AFH (including any pending AFH_Instant), Channel Quality Driven Data Rate (CQDDR, Link Manager Protocol [Part C] Section 4.1.7 on page 237) and power control (Link Manager Protocol [Part C] Section 4.1.3 on page 227). The procedure may then start again beginning at step 1. Aligning the timer with TX boundaries of the new piconet ensures that no device returns to the old piconet timing in the middle of a master RX slot.

After the role switch the ACL logical transport is reinitialized as if it were a new connection. For example, the SEQN of the first data packet containing a CRC on the new piconet channel shall be set according to the rules in Section 7.6.2 on page 142.

A parked slave shall be unparked before it can participate in a role switch.

8.6.6 Scatternet

Multiple piconets can cover the same area. Since each piconet has a different master, the piconets hop independently, each with their own hopping sequence and phase as determined by the respective master. In addition, the packets carried on the channels are preceded by different channel access codes as determined by the master device addresses. As more piconets are added, the probability of collisions increases; a graceful degradation of performance results as is common in frequency-hopping spread spectrum systems.

If multiple piconets cover the same area, a device can participate in two or more overlaying piconets by applying time multiplexing. To participate on the proper channel, it shall use the associated master device address and proper clock offset to obtain the correct phase. A device can act as a slave in several piconets, but only as a master in a single piconet: since two piconets with the same master are synchronized and use the same hopping sequence, they are one and the same piconet. A group of piconets in which connections exist between different piconets is called a *scatternet*.

A master or slave can become a slave in another piconet by being paged by the master of this other piconet. On the other hand, a device participating in one piconet can page the master or slave of another piconet. Since the paging device always starts out as master, a master-slave role switch is required if a slave role is desired. This is described in Section 8.6.5 on page 170.

8.6.6.1 Inter-piconet communications

Time multiplexing must be used to switch between piconets. Devices may achieve the time multiplexing necessary to implement scatternet by using sniff mode or by remaining in an active ACL connection. For an ACL connection in piconets where the device is a slave in the **CONNECTION** state, it may choose not to listen in every master slot. In this case it should be recognized that the quality of service on this link can degrade abruptly if the slave is not present enough to match up with the master polling that slave. Similarly, in piconets where the device is master it may choose not to transmit in every master slot. In this case it is important to honor T_{poll} as much as possible. Devices in sniff mode could have sufficient time to visit another piconet in between sniff slots. When the device is a slave using sniff mode and there are not sufficient idle slots, the device may choose to not listen to all master transmission slots in the sniff_attempts period or during the subsequent sniff_timeout period. A master is not required to transmit during sniff slots and therefore has flexibility for scatternet. If SCO or eSCO links are established, other piconets shall only be visited in the non-reserved slots in between reserved slots. This is only possible if there is a single SCO logical transport using HV3 packets or eSCO links where at least four slots remain in between the reserved slots. Since the multiple piconets are not synchronized, guard time must be left to account for misalignment. This means that only 2 slots can effectively be used to visit another piconet in between the HV3 packets.

Since the clocks of two masters of different piconets are not synchronized, a slave device participating in two piconets shall maintain two offsets that, added to its own native clock, create the two master clocks. Since the two master clocks drift independently, the slave must regularly update the offsets in order to keep synchronization to both masters.

8.6.7 Hop Sequence Switching

Hop sequence adaptation is controlled by the master and can be set to either *enabled* or *disabled*. Once enabled, hop sequence adaptation shall apply to all logical transports on a physical link. Once enabled, the master may periodically update the set of *used* and *unused* channels as well as disable hop sequence adaptation on a physical link. When a master has multiple physical links the state of each link is independent of all other physical links.

When hop sequence adaptation is enabled, the *sequence selection* hop selection kernel input is set to *adapted channel hopping sequence* and the *AFH_channel_map* input is set to the appropriate set of *used* and *unused* channels. Additionally, the *same channel* mechanism shall be used. When hop sequence adaptation is enabled with all channels *used* this is known as AHS(79).

When hop sequence adaptation is disabled, the *sequence selection* input of the hop selection kernel is set to *basic channel hopping sequence* (the *AFH_channel_map* input is unused in this case) and the *same channel* mechanism shall not be used.

The hop sequence adaptation state shall be changed when the master sends the LMP_set_AFH PDU and a baseband acknowledgement is received. When the baseband acknowledgement is received prior to the hop sequence switch instant, *AFH_Instant*, (See Link Manager Protocol [Part C] Section 4.1.4 on page 231) the hop sequence proceeds as shown in Figure 8.9 on page 173.

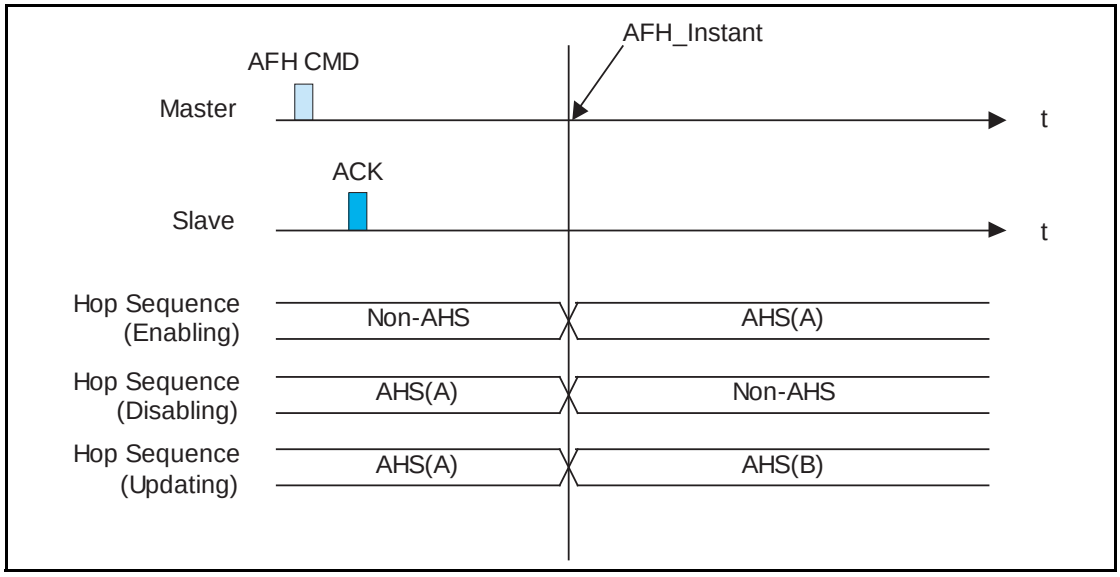

Figure 8.9: Successful hop sequence switching

When the baseband acknowledgement is not received prior to the *AFH_Instant* the master shall use a recovery hop sequence for the slave(s) that did not respond with an acknowledgement (this may be because the slave did not hear the master's transmission or the master did not hear the slave's transmission). When hop sequence adaptation is being enabled or disabled the recovery sequence shall be the *AFH_channel_map* specified in the LMP_set_AFH PDU. When the *AFH_channel_map* is being updated the master shall choose a recovery sequence that includes all of the RF channels marked as *used* in either the old or new *AFH_channel_map,* e.g. AHS(79). Once the baseband acknowledgement is received the master shall use the *AFH_channel_map* in the LMP_set_AFH PDU starting with the next transmission to the slave. See Figure 8.10 on page 174.

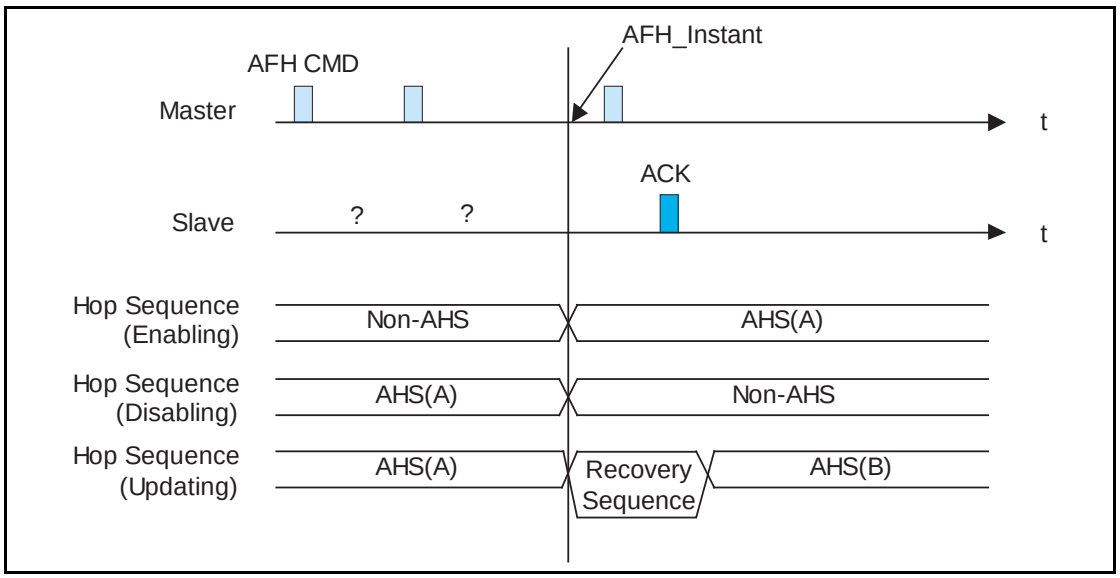

Figure 8.10: Recovery hop sequences

When the *AFH_Instant* occurs during a multi-slot packet transmitted by the master, the slave shall use the same hopping sequence parameters as the master used at the start of the multi-slot packet. An example of this is shown in Figure 8.11 on page 175. In this figure the *basic channel hopping sequence* is designated f. The first *adapted channel hopping sequence* is designated with f', and the second *adapted channel hopping sequence* is designated f".

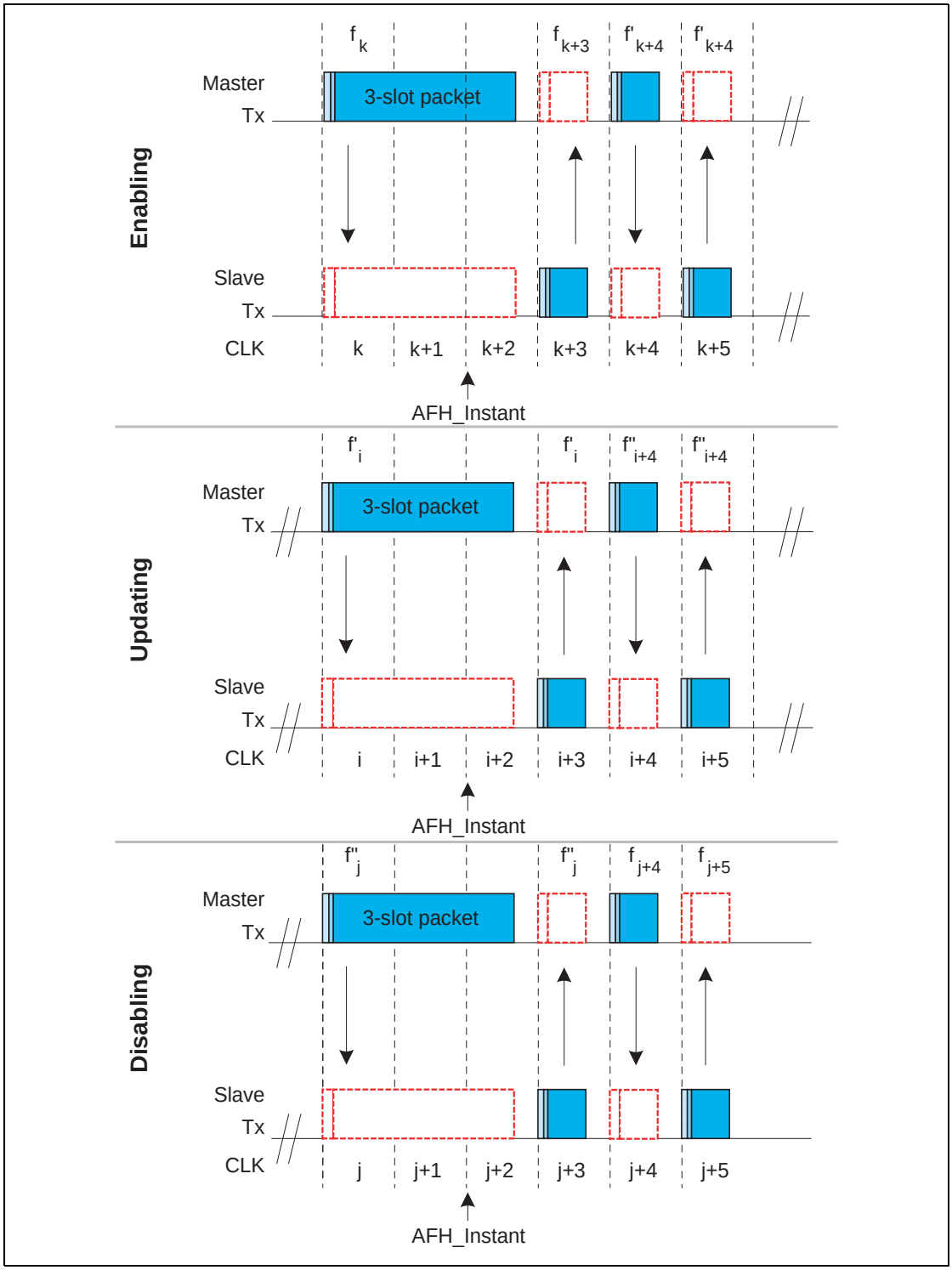

Figure 8.11: AFH_Instant changes during multi-slot packets transmitted by the master.

8.6.8 Channel Classification and Channel Map Selection

RF channels are classified as being *unknown, bad or good*. These classifications are determined individually by the master and slaves based on local information (e.g. active or passive channel assessment methods or from the Host via HCI). Information received from other devices via LMP (for example, an *AFH_channel_map* from a master or a channel classification report from a slave) shall not be included in a device's channel classification.

The three possible channel classifications shall be as defined in Table 8.6 on page 176.

Classification	Definition
unknown	A channel shall be classified as *unknown* if the channel assessment measurements are insufficient to reliably classify the channel, and the channel is not marked as *bad* in the most recent HCI *Set_AFH_Channel_Classification*.
bad	A channel may be classified as *bad* if an ACL or synchronous throughput failure measure associated with it has exceeded a threshold (defined by the particular channel assessment algorithm employed). A channel may also be classified as *bad* if an interference-level measure associated with it, determining the interference level that the link poses upon other systems in the vicinity, has exceeded a threshold (defined by the particular channel assessment algorithm employed). A channel shall be classified as *bad* when it is marked as *bad* in the most recent HCI *Set_AFH_Channel_Classification*
good	A channel shall be classified as *good* if it is not either *unknown* or *bad*.

Table 8.6: Channel classification descriptions

A master with AFH enabled physical links shall determine an *AFH_channel_map* based on any combination of the following information:

- Channel classification from local measurements (e.g. active or passive channel assessment in the Controller), if supported and enabled. The Host may enable or disable local measurements using the HCI *Write_AFH_Channel_Classification_Mode* command, defined in the HCI Functional Specification [Part E] Section 7.3.54 on page 591 if HCI is present.
- Channel classification information from the Host using the HCI *Set_AFH_channel_classification* command, defined in the HCI Functional Specification [Part E] Section 7.3.46 on page 583 if HCI is present. Channels classified as *bad* in the most recent *AFH_Host_Channel_Classification* shall be marked as *unused* in the *AFH_channel_map*.
- Channel classification reports received from slaves in *LMP_channel_classification* PDUs, defined in the LMP Specification [Part C] Section 4.1.5 on page 234.

The algorithm used by the master to combine these information sources and generate the *AFH_channel_map* is not defined in the specification and will be implementation specific. At no time shall the number of channels used be less than N_{min}, defined in Section 2.3.1 on page 74.

If a master that determines that all channels should be *used* it may keep AFH operation enabled using an *AFH_channel_map* of 79 *used* channels, i.e. AHS(79).

8.6.9 Power Management

Features are provided to allow low-power operation. These features are both at the microscopic level when handling the packets, and at the macroscopic level when using certain operation modes.

8.6.9.1 Packet handling

In order to minimize power consumption, packet handling is minimized both at TX and RX sides. At the TX side, power is minimized by only sending useful data. This means that if only link control information needs to be exchanged, **NULL** packets may be used. No transmission is required if there is no link control information to be sent, or if the transmission would only involve a NAK (NAK is implicit on no reply). If there is data to be sent, the payload length shall be adapted in order to send only the valid data bytes. At the RX side, packet processing takes place in different steps. If no valid access code is found in the search window, the transceiver may return to sleep. If an access code is found, the receiver device shall start to process the packet header. If the HEC fails, the device may return to sleep after the packet header. A valid header indicates if a payload will follow and how many slots are involved.

8.6.9.2 Slot occupancy

As was described in Section 6.5 on page 115, the packet type indicates how many slots a packet may occupy. A slave not addressed in the packet header may go to sleep for the remaining slots the packet occupies. This can be read from the TYPE code.

8.6.9.3 Recommendations for low-power operation

The most common and flexible methods for reducing power consumption are the use of sniff and park. Hold can also be used by repeated negotiation of hold periods.

8.6.9.4 Enhanced Data Rate

Enhanced Data Rate provides power saving because of the ability to send a given amount of data in either fewer packets or with the same (or similar) number of packets but with shorter payloads.

8.7 SNIFF MODE

In Sniff mode, the duty cycle of the slave's activity in the piconet may be reduced. If a slave is in active mode on an ACL logical transport, it shall listen in every ACL slot to the master traffic, unless that link is being treated as a scatternet link or is absent due to hold mode. With sniff mode, the time slots when a slave is listening are reduced, so the master shall only transmit to a slave in specified time slots. The sniff anchor points are spaced regularly with an interval of T_{sniff}.

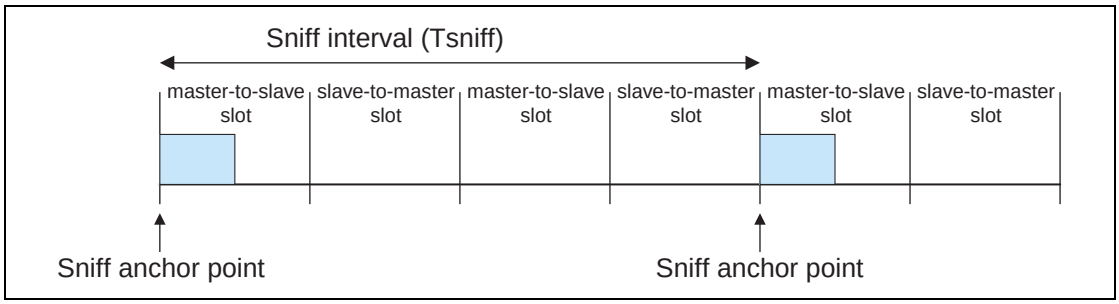

Figure 8.12: Sniff anchor points

The slave listens in master-to-slave transmission slots starting at the sniff anchor point. It shall use the following rules to determine whether to continue listening:

- If fewer than $N_{sniff\ attempt}$ master-to-slave transmission slots have elapsed since the sniff anchor point then the slave shall continue listening.
- If the slave has received a packet with a matching LT_ADDR that contains ACL data (DM, DH, DV, or AUX1 packets) in the preceding $N_{sniff\ timeout}$ master-to-slave transmission slots then it shall continue listening.
- If the slave has transmitted a packet containing ACL data (DM, DH, DV, or AUX1 packets) in the preceding $N_{sniff\ timeout}$ slave-to-master transmission slots then it shall continue listening.
- If the slave has received any packet with a matching LT_ADDR in the preceding $N_{sniff\ timeout}$ master-to-slave transmission slots then it may continue listening.
- A device may override the rules above and stop listening prior to $N_{sniff\ timeout}$ or the remaining $N_{sniff\ attempt}$ slots if it has activity in another piconet.

It is possible that activity from one sniff timeout may extend to the next sniff anchor point. Any activity from a previous sniff timeout shall not affect activity

after the next sniff anchor point. So in the above rules, only the slots since the last sniff anchor point are considered.

Note that $N_{sniff\ attempt}$ =1 and $N_{sniff\ timeout}$ =0 cause the slave to listen only at the slot beginning at the sniff anchor point, irrespective of packets received from the master.

$N_{sniff\ attempt}$ =0 shall not be used.

Sniff mode only applies to asynchronous logical transports and their associated LT_ADDR. Sniff mode shall not apply to synchronous logical transports, therefore, both masters and slaves shall still respect the reserved slots and retransmission windows of synchronous links.

To enter sniff mode, the master or slave shall issue a sniff command via the LM protocol. This message includes the sniff interval T_{sniff} and an offset D_{sniff}. In addition, an initialization flag indicates whether initialization procedure 1 or 2 shall be used. The device shall use initialization 1 when the MSB of the current master clock (CLK_{27}) is 0; it shall use initialization 2 when the MSB of the current master clock (CLK_{27}) is 1. The slave shall apply the initialization method as indicated by the initialization flag irrespective of its clock bit value CLK_{27}. The sniff anchor point determined by the master and the slave shall be initialized on the slots for which the clock satisfies the applicable equation:

$$CLK_{27-1} \bmod T_{sniff} = D_{sniff} \qquad \text{for initialization 1}$$

$$(\overline{CLK_{27}}, CLK_{26-1}) \bmod T_{sniff} = D_{sniff} \qquad \text{for initialization 2}$$

this implies that D_{sniff} must be even

After initialization, the clock value CLK(k+1) for the next sniff anchor point shall be derived by adding the fixed interval T_{sniff} to the clock value of the current sniff anchor point:

$$CLK(k+1) = CLK(k) + T_{sniff}$$

8.7.1 Sniff Transition Mode

Sniff transition mode is a special mode which is used during the transition between sniff and active mode. It is required because during this transition it is unclear which mode (Sniff or Active) the slave is in and it is necessary to ensure that the slave is polled correctly regardless of which mode it is in.

In sniff transition mode the master shall maintain the active mode poll interval in case the slave is in active mode. In addition the master shall poll the slave at least once in the sniff attempt transmit slots starting at each sniff anchor point. Note that this transmission counts for the active mode polling as well. The master shall use its high power accurate clock when in Sniff Transition Mode.

The precise circumstances under which the master enters Sniff Transition Mode are defined in [Part C] Section 4.5.3.1 on page 291.

Only LMP data shall ever be transferred in sniff transition mode. The ACL-C logical link shall carry control information exchanged between the link managers of the master and the slave(s). The ACL-C logical link shall use DM1 packets. The ACL-C logical link is indicated by the LLID code 11 in the payload header.

8.7.2 Sniff Subrating

When sniff subrating is enabled by the Link Manager a device alternates between sniff mode and sniff subrating mode. Sniff subrating mode allows a device to use a reduced number of sniff anchor points. A device shall transition from sniff mode to sniff subrating mode based on the sniff mode timeout value (see Section 8.7.2.1 on page 180). A device shall transition from sniff subrating mode to sniff mode whenever ACL-U or ACL-C data is received from the remote device.

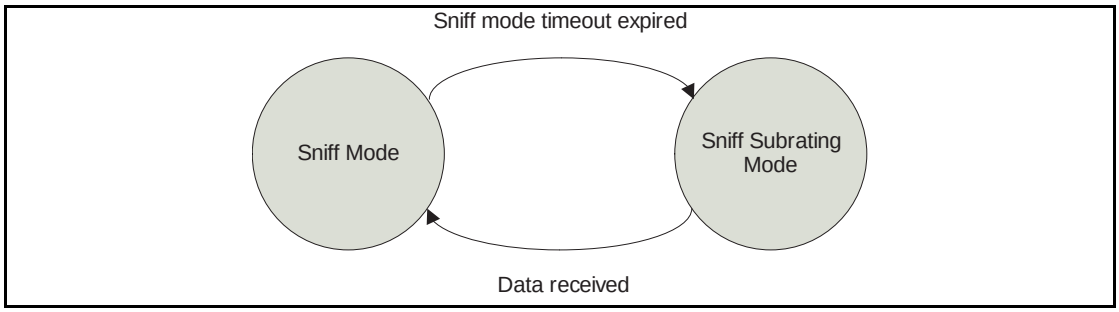

Figure 8.13: Sniff subrating

A slave device in sniff subrating mode shall also temporarily enter sniff mode after transmitting a packet requiring acknowledgement until the baseband acknowledgement is received.

Note: Once sniff subrating is enabled the master and slave devices may be in sniff mode or sniff subrating mode at different times. The rules defined in Section 8.7.2.2 on page 181 describe how the two devices maintain synchronization and can reliably exchange data.

8.7.2.1 Sniff Mode Timeout

Whenever a packet containing ACL-C or ACL-U data is received by a device in sniff subrating mode it shall transition to sniff mode, re-start the sniff mode timeout and all sniff anchor points shall be used until a minimum number of slots equal to the received min_sniff_mode_timeout have expired. If ACL-C or ACL-U data is received before min_sniff_mode_timeout slots have passed since the last ACL-C or ACL-U data was received, the timeout shall be restarted. NULL

and POLL packets do not contain ACL data and shall not restart the sniff mode timeout.

Note that there are two sniff mode timeout values: one for the local device and one for the remote device.

8.7.2.2 Sniff Subrating Mode

When the sniff mode timeout has expired a device shall enter sniff subrating mode. In sniff subrating mode the mandatory sniff subrate anchor points at which the master shall transmit to the slave and the slave shall listen for the master, are defined as follows (where M is the max subrate received by the master, N is the max subrate received by the slave, A is the sniff subrating instant, and k is any positive integer):

	Master	**Slave**
M=N	$CLK_{M(k)} = A + [T_{sniff} \bullet M \bullet k]$	$CLK_{N(k)} = A + [T_{sniff} \bullet N \bullet k]$
M>N	At least once every j anchor points satisfying $CLK_{N(k)} = A + [T_{sniff} \bullet N \bullet k]$, where $j = \lfloor M / N \rfloor$	$CLK_{N(k)} = A + [T_{sniff} \bullet N \bullet k]$
M<N	$CLK_{M(k)} = A + [T_{sniff} \bullet M \bullet k]$	At least once every j anchor points satisfying $CLK_{M(k)} = A + [T_{sniff} \bullet M \bullet k]$, where $j = \lfloor N / M \rfloor$

Table 8.7: Sniff subrate anchor points

1 Note: $\lfloor X \rfloor$ denotes the mathematical “floor” function, equivalent to rounding down to the nearest integer. Hence, $\lfloor X / Y \rfloor$ yields the highest integer j for which $Y \bullet j \leq X$.

2 Note: When sniff subrating is enabled, the rules specified in Section 8.7 for $N_{sniff\ attempt}$ and $N_{sniff\ Timeout}$ shall apply to sniff subrating anchor points.

8.8 HOLD MODE

During the **CONNECTION** state, the ACL logical transport to a slave can be put in a **hold** mode. In **hold** mode the slave temporarily shall not support ACL packets on the channel. Any synchronous packet during reserved synchronous slots (from SCO and eSCO links) shall be supported. With the **hold** mode, capacity can be made free to do other things like scanning, paging, inquiring, or attending another piconet. The device in **hold** mode can also enter a low-power sleep mode. During **hold** mode, the slave device keeps its logical transport address(es) (LT_ADDR).

Prior to entering hold mode, master and slave agree on the time duration the slave remains in hold mode. A timer shall be initialized with the *holdTO* value.

When the timer is expired, the slave shall wake up, synchronize to the traffic on the channel and will wait for further master transmissions.

8.9 PARK STATE

When a slave does not need to participate on the piconet channel, but still needs to remain synchronized to the channel, it can enter **PARK** state. **PARK** state is a state with very little activity in the slave. In the **PARK** state, the slave shall give up its logical transport address LT_ADDR. Instead, it shall receive two new addresses to be used in the **PARK** state

- PM_ADDR: 8-bit Parked Member Address
- AR_ADDR: 8-bit Access Request Address

The PM_ADDR distinguishes a parked slave from the other parked slaves. This address may be used in the master-initiated unpark procedure. In addition to the PM_ADDR, a parked slave may also be unparked by its 48-bit BD_ADDR. The all-zero PM_ADDR is a reserved address: if a parked device has the all-zero PM_ADDR it can only be unparked by the BD_ADDR. In that case, the PM_ADDR has no meaning. The AR_ADDR shall be used by the slave in the slave-initiated unpark procedure. All messages sent to the parked slaves are carried by broadcast packets.

The parked slave wakes up at regular intervals to listen to the channel in order to re-synchronize and to check for broadcast messages. To support the synchronization and channel access of the parked slaves, the master supports a beacon train described in the next section. The beacon structure is communicated to the slave when it is parked. When the beacon structure changes, the parked slaves are updated through broadcast messages.

The master shall maintain separate non-overlapping park beacon structures for each hop sequence. The beacon structures shall not overlap either their beacon slots or access windows.

In addition for using it for low power consumption, park is used to connect more than seven slaves to a single master. At any one time, only seven slaves can be in the **CONNECTION** state. However, by swapping active and parked slaves out respectively in the piconet, the number of slaves can be much larger (255 if the PM_ADDR is used, and an arbitrarily large number if the BD_ADDR is used).

8.9.1 Beacon Train

To support parked slaves, the master establishes a beacon train when one or more slaves are parked. The beacon train consists of one beacon slot or a train of equidistant beacon slots which is transmitted periodically with a constant time interval. The beacon train is illustrated in Figure 8.14 on page 184. A train of N_B ($N_B \geq 1$) beacon slots is defined with an interval of T_B slots. The beacon slots in the train are separated by Δ_B. The start of the first beacon slot is referred to as the **beacon instant** and serves as the beacon timing reference. The beacon parameters N_B and T_B are chosen such that there are sufficient

beacon slots for a parked slave to synchronize to during a certain time window in an error-prone environment.

When parked, the slave shall receive the beacon parameters through an LMP command. In addition, the timing of the beacon instant is indicated through the offset D_B. As with the SCO logical transport (see Section 8.6.2 on page 165), two initialization procedures 1 or 2 are used. The master shall use initialization 1 when the MSB of the current master clock (CLK_{27}) is 0; it shall use initialization 2 when the MSB of the current master clock (CLK_{27}) is 1. The chosen initialization procedure shall also be carried by an initialization flag in the LMP command. The slave shall apply the initialization method as indicated by the initialization flag irrespective of its clock bit CLK_{27}. The master-to-slave slot positioned at the beacon instant shall be initialized on the slots for which the clock satisfies the applicable equation:

$$CLK_{27-1} \bmod T_B = D_B \qquad \text{for initialization 1}$$

$$(\overline{CLK}_{27}, CLK_{26-1}) \bmod T_B = D_B \qquad \text{for initialization 2}$$

this implies that D_B will be even.

After initialization, the clock value CLK(k+1) for the next beacon instant shall be derived by adding the fixed interval T_B to the clock value of the current beacon instant:

$$CLK(k+1) = CLK(k) + T_B$$

The beacon train serves four purposes:

1. Transmission of master-to-slave packets which the parked slaves can use for re-synchronization
2. Carrying messages to the parked slaves to change the beacon parameters
3. Carrying general broadcast messages to the parked slaves
4. Unparking of one or more parked slaves

Since a slave can synchronize to any packet which is preceded by the proper channel access code, the packets carried on the beacon slots do not have to contain specific broadcast packets for parked slaves to be able to synchronize; any packet may be used. The only requirement placed on the beacon slots is that there is a master-to-slave transmission present on the hopping sequence associated with the park structure. If there is no information to be sent, **NULL** packets may be transmitted by the master. If there is indeed broadcast information to be sent to the parked slaves, the first packet of the broadcast message shall be repeated in every beacon slot of the beacon train. However, synchronous traffic in the synchronous reserved slots may interrupt the beacon transmission if it is on the same hopping sequence as the parked slaves. The master shall configure its park beacon structure so that reserved slots of synchronous logical transports do not cause slaves to miss synchronization on a beacon slot. For example, a master that has active slaves using AHS, and parked slaves using Non-AHS shall ensure that the Park beacons cannot be interrupted by AHS synchronous reserved slots.

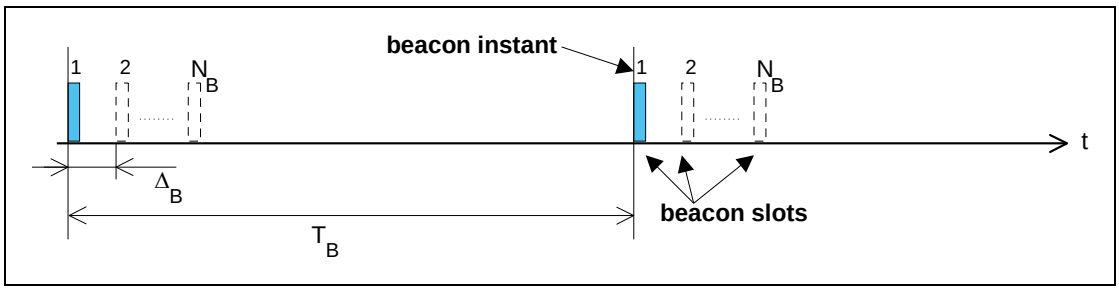

Figure 8.14: General beacon train format

The master can place parked slaves in any of the AFH operating modes, but shall ensure that all parked slaves use the same hop sequence. Masters should use AHS(79) or AHS when all the slaves in the Piconet are AFH capable.

A master that switches a slave between AFH enabled, AFH disabled or AHS(79) operation shall ensure that the AFH_Instant occurs before transmission of the beacon train using this hop sequence.

The master communicates with parked slaves using broadcast messages. Since these messages can be time-critical, an ongoing repetition train of broadcast message may be prematurely aborted by broadcast information destined to parked slaves in beacon slots and in access windows (see Section 8.9.2).

8.9.2 Beacon Access Window

In addition to the beacon slots, an access window is defined where the parked slaves can send requests to be unparked. To increase reliability, the access window may be repeated M_{access} times ($M_{access} \geq 1$), see Figure 8.15 on page 185. The access window starts a fixed delay D_{access} after the beacon instant. The width of the access window is T_{access}.

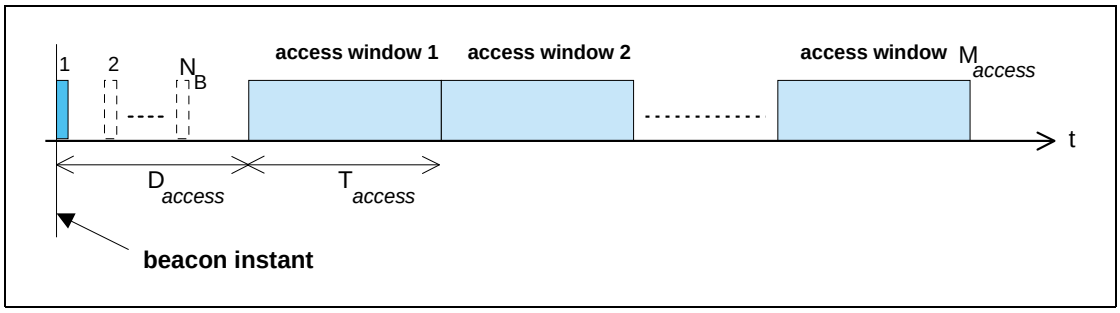

Figure 8.15: Definition of access window

The access window supports a polling slave access technique. The format of the polling technique is shown in Figure 8.16 on page 185. The same TDD structure is used as on the piconet channel, i.e. master-to-slave transmission is alternated with slave-to-master transmission. The slave-to-master slot is divided into two half slots of 312.5 µs each. The half slot a parked slave is allowed to respond in corresponds to its access request address (AR_ADDR), see also Section 8.9.6 on page 188. For counting the half slots to determine the access request slot, the start of the access window is used, see Figure 8.16 on page 185. The slave shall only send an access request in the proper slave-to-master half slot if a broadcast packet has been received in the preceding master-to-slave slot. In this way, the master polls the parked slaves.

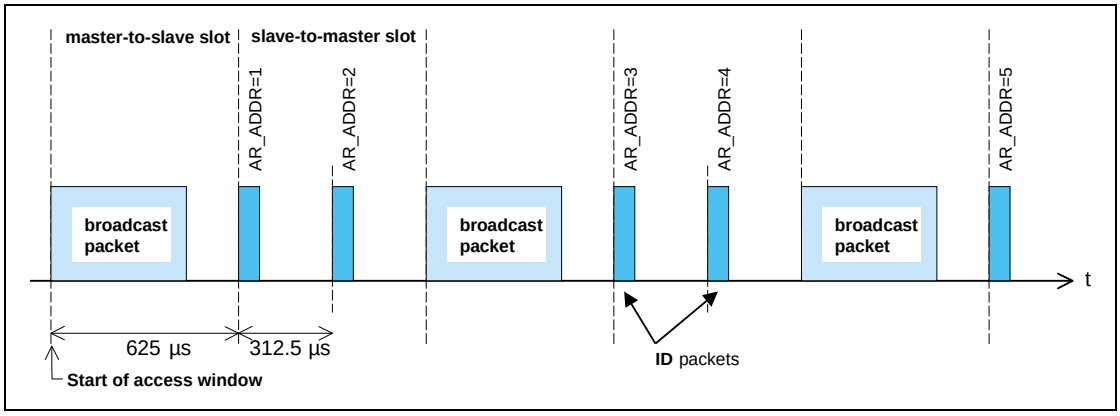

Figure 8.16: Access procedure applying the polling technique.

The slots of the access window may also be used for traffic on the piconet if required. For example, if a synchronous connection has to be supported, the slots reserved for the synchronous link may carry synchronous information

instead of being used for access requests, i.e. if the master-to-slave slot in the access window contains a packet different from a broadcast packet, the following slave-to-master slot shall not be used for slave access requests. If the master transmits a broadcast packet in the access window then it shall use the hop sequence associated with the park structure. Slots in the access window not affected by piconet traffic may still be used according to the defined access structure (an example is shown in Figure 8.17 on page 186). The access procedure shall be continued as if no interruption had taken place.

When the slave is parked, the master shall indicate what type of access scheme will be used. For the polling scheme, the number of slave-to-master access slots N_{acc_slot} is indicated.

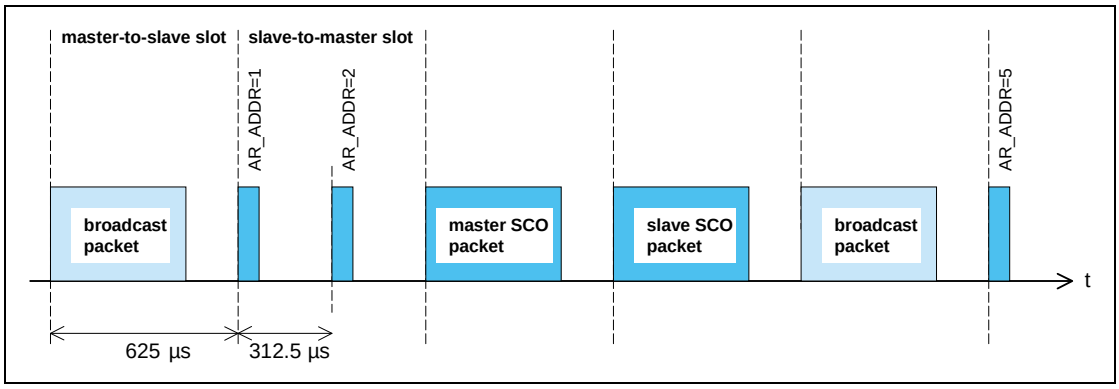

Figure 8.17: Disturbance of access window by SCO traffic

By default, the access window is always present. However, its activation depends on the master sending broadcast messages to the slave at the appropriate slots in the access window. A flag in a broadcast LMP message within the beacon slots may indicate that the access window(s) belonging to this instant will not be activated. This prevents unnecessary scanning of parked slaves that want to request access.

8.9.3 Parked Slave Synchronization

Parked slaves wake up periodically to re-synchronize to the channel. Any packet exchanged on the channel can be used for synchronization. Since master transmission is mandatory on the beacon slots, parked slaves will use the beacon train to re-synchronize. A parked slave may wake-up at the beacon instant to read the packet sent on the first beacon slot. If this fails, it may retry on the next beacon slot in the beacon train; in total, there are N_B opportunities per beacon instant to re-synchronize. During the search, the slave may increase its search window, see also Section 2.2.5.2 on page 73. The separation between the beacon slots in the beacon train Δ_B shall be chosen such that consecutive search windows will not overlap.

The parked slave may not wake up at every beacon instant. Instead, a sleep interval may be applied which is longer than the beacon interval T_B, see Figure 8.18 on page 187. The slave sleep window shall be a multiple N_{B_sleep} of T_B.

The precise beacon instant the slave may wake up on shall be indicated by the master with D_{B_sleep} which indicates the offset (in multiples of T_B) with respect to the beacon instant ($0 < D_{B_sleep} < N_{B_sleep}-1$). To initialize the wake-up period, the applicable equation shall be used:

$$CLK_{27-1} \bmod (N_{B_sleep} \bullet T_B) = D_B + D_{B_sleep} \bullet T_B \quad \text{for initialization 1}$$

$$(\overline{CLK_{27}}, CLK_{26-1}) \bmod (N_{B_sleep} \bullet T_B) = D_B + D_{B_sleep} \bullet T_B \quad \text{for initialization 2}$$

where initialization 1 shall be chosen by the master if the MSB in the current master clock is 0 and initialization 2 shall be chosen by the master if the MSB in the current master clock is 1.

When the master needs to send broadcast messages to the parked slaves, it may use the beacon slots for these broadcast messages. However, if $N_B < N_{BC}$, the slots following the last beacon slot in the beacon train shall be used for the remaining $N_{BC}-N_B$ broadcast packets. If $N_B > N_{BC}$, the broadcast message shall be repeated on all N_B beacon slots.

A parked slave shall read the broadcast messages sent in the beacon slot(s) it wakes up in. If the parked slave wakes up, the minimum wake-up activity shall be to read the channel access code for re-synchronization and the packet header to check for broadcast messages.

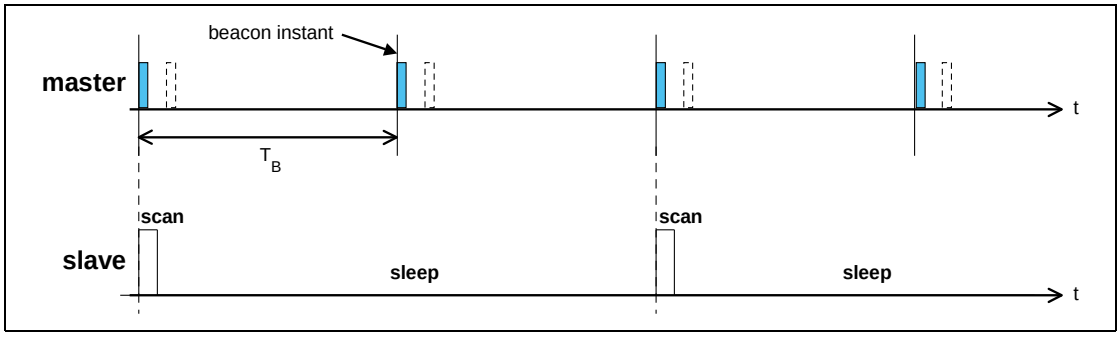

Figure 8.18: Extended sleep interval of parked slaves.

8.9.4 Parking

A master can park an active slave through the exchange of LMP commands. Before being put into park, the slave shall be assigned a PM_ADDR and an AR_ADDR. Every parked slave shall have a unique PM_ADDR or a PM_ADDR of 0. The AR_ADDR is not necessarily unique. The beacon parameters shall be given by the master when the slave is parked. The slave shall then give up its LT_ADDR and shall enter **PARK** state. A master can park only a single slave at a time. The park message is carried with a normal data packet and addresses the slave through its LT_ADDR.

8.9.5 Master-initiated Unparking

The master can unpark a parked slave by sending a dedicated LMP unpark command including the parked slave's address. This message shall be sent in a broadcast packet on the beacon slots. The master shall use either the slave's PM_ADDR, or its BD_ADDR. The message also includes the logical transport address LT_ADDR the slave shall use after it has re-entered the piconet. The unpark message may include a number of slave addresses so that multiple slaves may be unparked simultaneously. For each slave, a different LT_ADDR shall be assigned.

After having received the unpark message, the parked slave matching the PM_ADDR or BD_ADDR shall leave the **PARK** state and enter the **CONNECTION** state. It shall keep listening to the master until it is addressed by the master through its LT_ADDR. The first packet sent by the master shall be a POLL packet. The return packet in response to the POLL packet confirms that the slave has been unparked. If no response packet from the slave is received for *newconnectionTO* number of slots after the end of beacon repetition period, the master shall unpark the slave again. The master shall use the same LT_ADDR on each unpark attempt until it has received a link supervision timeout for that slave or the unpark has completed successfully. If the slave does not receive the POLL packet for *newconnectionTO* number of slots after the end of beacon repetition period, it shall return to park, with the same beacon parameters. After confirming that the slave is in the **CONNECTION** state, the master decides in which mode the slave will continue.

When a device is unparked, the SEQN bit for the link shall be reset to 1 on both the master and the slave (see Section 7.6.2.1 on page 143).

8.9.6 Slave-initiated Unparking

A slave can request access to the channel through the access window defined in Section 8.9.2 on page 185. As shown in Figure 8.16 on page 185, the access window includes several slave-to-master half slots where the slave may send an access request message. The specific half slot the slave is allowed to respond in, corresponds to its access request address (AR_ADDR) which it received when it was parked. The order of the half slots (in Figure 8.16 the AR_ADDR numbers linearly increase from 1 to 5) is not fixed: an LMP command sent in the beacon slots may reconfigure the access window. When a slave desires access to the channel, it shall send an access request message in the proper slave-to-master half slot. The access request message of the slave is the **ID** packet containing the device access code (DAC) of the master (which is the channel access code without the trailer). The parked slave shall only transmit an access request message in the half slot, when in the preceding master-to-slave slot a broadcast packet has been received. This broadcast message may contain any kind of broadcast information not necessarily related to the parked slave(s). If no broadcast information is available, a broadcast **NULL** or broadcast **POLL** packet shall be sent.

After having sent an access request, the parked slave shall listen for an unpark message from the master. As long as no unpark message is received, the slave shall repeat the access requests in the subsequent access windows. After the last access window (there are M_{access} windows in total, see Section 8.9.2 on page 185), the parked slave shall listen for an additional N_{poll} time slots for an unpark message. If no unpark message is received within N_{poll} slots after the end of the last access window, the slave may return to sleep and retry an access attempt after the next beacon instant.

After having received the unpark message, the parked slave matching the PM_ADDR or BD_ADDR shall leave the **PARK** state and enter the **CONNECTION** state. It shall keep listening to the master until it is addressed by the master through its LT_ADDR. The first packet sent by the master shall be a POLL packet. The return packet in response to the POLL packet confirms that the slave has been unparked. After confirming that the slave is in the **CONNECTION** state, the master decides in which mode the slave will continue. If no response packet from the slave is received for *newconnectionTO* number of slots after N_{poll} slots after the end of the last access window, the master shall send the unpark message to the slave again. If the slave does not receive the POLL packet for *newconnectionTO* number of slots after N_{poll} slots after the end of the last access window, it shall return to park, with the same beacon parameters.

When a device is unparked, the SEQN bit for the link shall be reset to 1 on both the master and the slave (see Section 7.6.2.1 on page 143).

8.9.7 Broadcast Scan Window

In the beacon train, the master can support broadcast messages to the parked slaves. However, it may extend its broadcast capacity by indicating to the parked slaves that more broadcast information is following after the beacon train. This is achieved by an LMP command ordering the parked slaves (as well as the active slaves) to listen to the channel for broadcast messages during a limited time window. This time window starts at the beacon instant and continues for the period indicated in the LMP command sent in the beacon train.

8.9.8 Polling in the Park State

In the **PARK** state, parked slaves may send access requests in the access window provided a broadcast packet is received in the preceding master-to-slave slot. Slaves in the **CONNECTION** state shall not send in the slave-to-master slots following the broadcast packet, since they are only allowed to send if addressed specifically.

9 AUDIO

On the air-interface, either a 64 kb/s log PCM (Pulse Code Modulation) format (A-law or μ-law) may be used, or a 64 kb/s CVSD (Continuous Variable Slope Delta Modulation) may be used. The latter format applies an adaptive delta modulation algorithm with syllabic companding.

The voice coding on the line interface is designed to have a quality equal to or better than the quality of 64 kb/s log PCM.

Table 9.1 on page 190 summarizes the voice coding schemes supported on the air interface. The appropriate voice coding scheme is selected after negotiations between the Link Managers.

Voice Codecs	
linear	CVSD
8-bit logarithmic	A-law
	μ-law

Table 9.1: Voice coding schemes supported on the air interface.

9.1 LOG PCM CODEC

Since the synchronous logical transports on the air-interface can support a 64 kb/s information stream, a 64 kb/s log PCM traffic can be used for transmission. Either A-law or μ-law compression may be applied. In the event that the line interface uses A-law and the air interface uses μ-law or vice versa, a conversion from A-law to μ-law shall be performed. The compression method shall follow ITU-T recommendations G. 711.

9.2 CVSD CODEC

A more robust format for voice over the air interface is delta modulation. This modulation scheme follows the waveform where the output bits indicate whether the prediction value is smaller or larger then the input waveform. To reduce slope overload effects, syllabic companding is applied: the step size is adapted according to the average signal slope. The input to the CVSD encoder shall be 64 ksamples/s linear PCM (typically 16 bits, but actual value is implementation specific). Block diagrams of the CVSD encoder and CVSD decoder are shown in Figure 9.1 on page 191, Figure 9.2 on page 191 and Figure 9.3 on page 191. The system shall be clocked at 64 kHz.

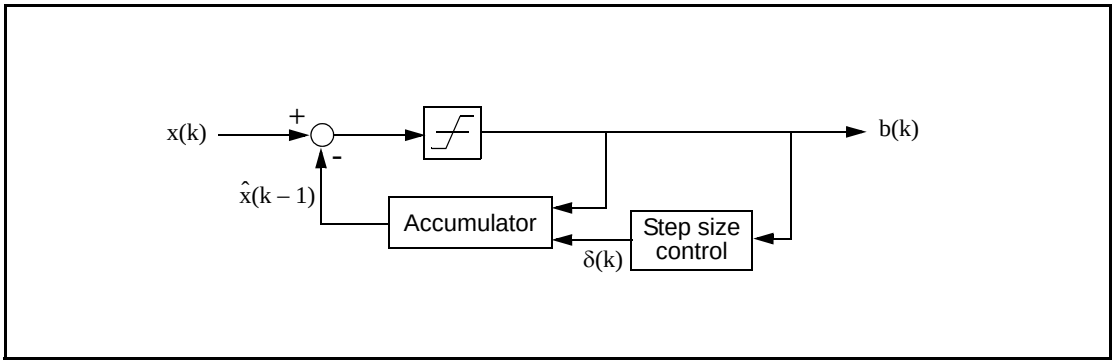

Figure 9.1: Block diagram of CVSD encoder with syllabic companding.

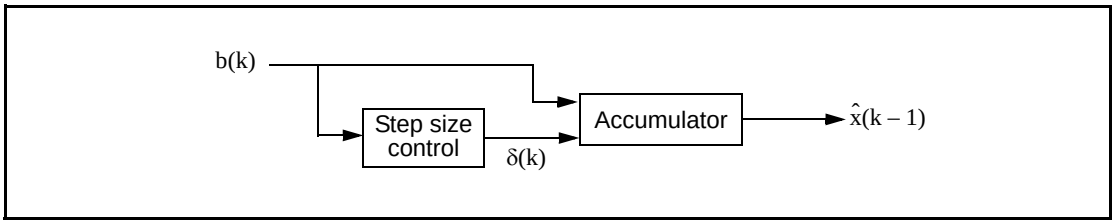

Figure 9.2: Block diagram of CVSD decoder with syllabic companding.

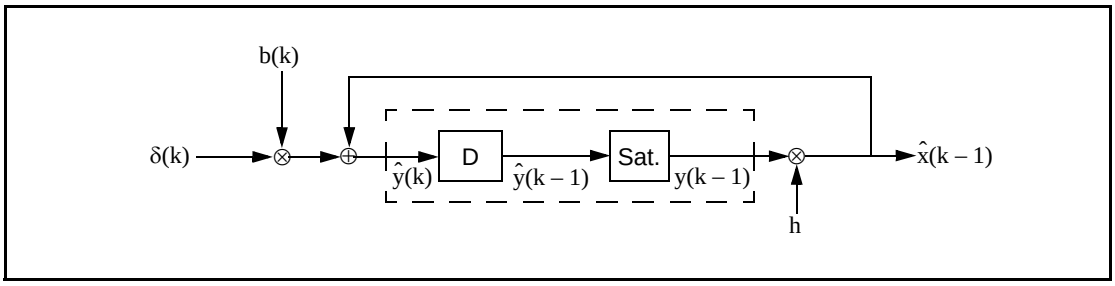

Figure 9.3: Accumulator procedure.

Let $\mathrm{sgn}(x) = 1$ for $x \geq 0$, otherwise $\mathrm{sgn}(x) = -1$. On air these numbers shall be represented by the sign bit; i.e. negative numbers are mapped on “1” and positive numbers are mapped on “0”.

Denote the CVSD encoder output bit $b(k)$, the encoder input $x(k)$, the accumulator contents $y(k)$, and the step size $\delta(k)$. Furthermore, let *h* be the decay factor for the accumulator, let β denote the decay factor for the step size, and, let α be the syllabic companding parameter. The latter parameter monitors the slope by considering the *K* most recent output bits

Let

$$\hat{x}(k) = hy(k). \quad \text{(EQ 13)}$$

Then, the CVSD encoder internal state shall be updated according to the following set of equations:

$$b(k) = \mathrm{sgn}\{x(k) - \hat{x}(k-1)\}, \quad \text{(EQ 14)}$$

$$\alpha = \begin{cases} 1, & \text{if J bits in the last K output bits are equal,} \\ 0, & \text{otherwise,} \end{cases} \quad \text{(EQ 15)}$$

$$\delta(k) = \begin{cases} \min\{\delta(k-1) + \delta_{min}, \delta_{max}\}, & \alpha = 1, \\ \max\{\beta\delta(k-1), \delta_{min}\}, & \alpha = 0, \end{cases} \quad \text{(EQ 16)}$$

$$y(k) = \begin{cases} \min\{\hat{y}(k), y_{max}\}, & \hat{y}(k) \geq 0. \\ \max\{\hat{y}(k), y_{min}\}, & \hat{y}(k) < 0. \end{cases} \quad \text{(EQ 17)}$$

where

$$\hat{y}(k) = \hat{x}(k-1) + b(k)\delta(k). \quad \text{(EQ 18)}$$

In these equations, δ_{min} and δ_{max} are the minimum and maximum step sizes, and, y_{min} and y_{max} are the accumulator's negative and positive saturation values, respectively. Over air, the bits shall be sent in the same order they are generated by the CVSD encoder.

For a 64 kb/s CVSD, the parameters as shown in Table 9.2 shall be used. The numbers are based on a 16 bit signed number output from the accumulator. These values result in a time constant of 0.5 ms for the accumulator decay, and a time constant of 16 ms for the step size decay

Parameter	Value
h	$1 - \frac{1}{32}$
β	$1 - \frac{1}{1024}$
J	4
K	4
δ_{min}	10
δ_{max}	1280
y_{min}	-2^{15} or $-2^{15} + 1$
y_{max}	$2^{15} - 1$

Table 9.2: CVSD parameter values. The values are based on a 16 bit signed number output from the accumulator.

9.3 ERROR HANDLING

In the DV, HV3, EV3, EV5, 2-EV3, 3-EV3, 2-EV5 and 3-EV5 packets, the voice is not protected by FEC. The quality of the voice in an error-prone environment then depends on the robustness of the voice coding scheme and, in the case of eSCO, the retransmission scheme. CVSD, in particular, is rather insensitive to random bit errors, which are experienced as white background noise. However, when a packet is rejected because either the channel access code, the HEC test was unsuccessful, or the CRC has failed, measures have to be taken to “fill” in the lost speech segment.

The voice payload in the **HV2** and **EV4** packets are protected by a 2/3 rate FEC. For errors that are detected but cannot be corrected, the receiver should try to minimize the audible effects. For instance, from the 15-bit FEC segment with uncorrected errors, the 10-bit information part as found before the FEC decoder should be used. The **HV1** packet is protected by a 3 bit repetition FEC. For this code, the decoding scheme will always assume zero or one-bit errors. Thus, there exist no detectable but uncorrectable error events for **HV1** packets.

9.4 GENERAL AUDIO REQUIREMENTS

9.4.1 Signal Levels

For A-law and μ-law log-PCM encoded signals the requirements on signal levels shall follow the ITU-T recommendation G.711.

Full swing at the 16 bit linear PCM interface to the CVSD encoder is defined to be 3 dBm0.

9.4.2 CVSD Audio Quality

For Bluetooth audio quality the requirements are put on the transmitter side. The 64 ksamples/s linear PCM input signal should have negligible spectral power density above 4 kHz. The power spectral density in the 4-32 kHz band of the decoded signal at the 64 ksample/s linear PCM output, should be more than 20 dB below the maximum in the 0-4 kHz range.

10 LIST OF FIGURES

Figure 1.1: Piconets with a single slave operation (a), a multi-slave operation (b) and a scatternet operation (c). 63
Figure 1.2: Standard Basic Rate packet format. 64
Figure 1.3: Standard Enhanced Data Rate packet format 64
Figure 1.4: Bluetooth clock. 64
Figure 1.5: Format of BD_ADDR. 66
Figure 2.1: Multi-slot packets 70
Figure 2.2: Derivation of CLK in master (a) and in slave (b). 71
Figure 2.3: RX/TX cycle of master transceiver in normal mode for single-slot packets. 72
Figure 2.4: RX/TX cycle of slave transceiver in normal mode for single-slot packets. 73
Figure 2.5: RX timing of slave returning from hold mode. 74
Figure 2.6: Derivation of CLKE. 75
Figure 2.7: RX/TX cycle of transceiver in PAGE mode. 76
Figure 2.8: Timing of page response packets on successful page in first half slot 77
Figure 2.9: Timing of page response packets on successful page in second half slot 78
Figure 2.10: Timing of inquiry response packets on successful inquiry in first half slot 80
Figure 2.11: Timing of inquiry response packets on successful inquiry in second half slot 80
Figure 2.12: General block diagram of hop selection scheme. 82
Figure 2.13: Hop selection scheme in CONNECTION state. 83
Figure 2.14: Single- and multi-slot packets. 84
Figure 2.15: Example of the same channel mechanism. 84
Figure 2.16: Block diagram of the basic hop selection kernel for the hop system. 85
Figure 2.17: XOR operation for the hop system. 86
Figure 2.18: Permutation operation for the hop system. 87
Figure 2.19: Butterfly implementation. 87
Figure 2.20: Block diagram of adaptive hop selection mechanism 89
Figure 4.1: Functional diagram of TX buffering. 97
Figure 4.2: Functional diagram of RX buffering 101
Figure 6.1: General Basic Rate packet format. 106
Figure 6.2: General enhanced data rate packet format 106
Figure 6.3: Access code format 108
Figure 6.4: Preamble 109
Figure 6.5: Construction of the sync word. 110
Figure 6.6: LFSR and the starting state to generate 112

Figure 6.7: Trailer in CAC when MSB of sync word is 0 (a), and when MSB of sync word is 1 (b). 112
Figure 6.8: Header format. 113
Figure 6.9: Format of the FHS payload. 117
Figure 6.10: DV packet format 121
Figure 6.11: **Synchronization sequence 126**
Figure 6.12: Payload header format for Basic Rate single-slot ACL packets. 127
Figure 6.13: Payload header format for multi-slot ACL packets and all EDR ACL packets. 1....27
Figure 7.1: Header bit processes. 132
Figure 7.2: Payload bit processes. 132
Figure 7.3: The LFSR circuit generating the HEC. 133
Figure 7.4: Initial state of the HEC generating circuit. 134
Figure 7.5: HEC generation and checking. 134
Figure 7.6: The LFSR circuit generating the CRC. 135
Figure 7.7: Initial state of the CRC generating circuit. 135
Figure 7.8: CRC generation and checking. 135
Figure 7.9: Data whitening LFSR. 136
Figure 7.10: Bit-repetition encoding scheme. 137
Figure 7.11: LFSR generating the (15,10) shortened Hamming code. 138
Figure 7.12: Stage 1 of the receive protocol for determining the ARQN bit. 140
Figure 7.13: Stage 2 (ACL) of the receive protocol for determining the ARQN bit. 141
Figure 7.14: Stage 2 (eSCO) of the receive protocol for determining the ARQN bit. 142
Figure 7.15: Transmit filtering for packets with CRC. 143
Figure 7.16: Broadcast repetition scheme 147
Figure 8.1: State diagram of link controller. 148
Figure 8.2: Conventional page (a), page while one synchronous link present (b), page while two synchronous links present (c). 153
Figure 8.3: Messaging at initial connection when slave responds to first page message. 155
Figure 8.4: Messaging at initial connection when slave responds to second page message. 155
Figure 8.5: Connection state. 164
Figure 8.6: RX/TX timing in multi-slave configuration 165
Figure 8.7: eSCO Window Details for Single-Slot Packets 168
Figure 8.8: eSCO Window Details for Asymmetric Traffic 169
Figure 8.9: Successful hop sequence switching 173
Figure 8.10: Recovery hop sequences 174
Figure 8.11: AFH_Instant changes during multi-slot packets transmitted by the master. 175

Figure 8.12: Sniff anchor points 178
Figure 8.13: Sniff subrating 180
Figure 8.14: General beacon train format 184
Figure 8.15: Definition of access window 185
Figure 8.16: Access procedure applying the polling technique. 185
Figure 8.17: Disturbance of access window by SCO traffic 186
Figure 8.18: Extended sleep interval of parked slaves. 187
Figure 9.1: Block diagram of CVSD encoder with syllabic companding. .. 191
Figure 9.2: Block diagram of CVSD decoder with syllabic companding. .. 191
Figure 9.3: Accumulator procedure. 191
Figure 11.1: SLR measurement set-up. 199
Figure 11.2: RLR measurement set-up. 199
Figure 11.3: Plot of recommended frequency mask for Bluetooth. The GSM send frequency mask is given for comparison (dotted line) ... 200
Figure 11.4: Timing constraint on AFH_Instant with slaves in park, hold and sniff 204

11 LIST OF TABLES

Table 2.1: Control of the butterflies for the hop system 86
Table 2.2: Control for hop system. 90
Table 6.1: Summary of access code types. 108
Table 6.2: Packets defined for synchronous and asynchronous logical transport types. 116
Table 6.3: Description of the FHS payload 118
Table 6.4: Contents of SR field 119
Table 6.5: Contents of page scan mode field....119
Table 6.6: Logical link LLID field contents....128
Table 6.7: Use of payload header flow bit on the logical links. 129
Table 6.8: Link control packets 130
Table 6.9: ACL packets....130
Table 6.10: Synchronous packets....131
Table 8.1: Relationship between scan interval, and paging modes R0, R1, and R2. 150
Table 8.2: Relationship between train repetition, and paging modes R0, R1 and R2 when synchronous links are present. 153
Table 8.3: Initial messaging during start-up. 154
Table 8.4: Increase of train repetition when synchronous links are present 161
Table 8.5: Messaging during inquiry routines. 163
Table 8.6: Channel classification descriptions 176
Table 8.7: Sniff subrate anchor points 181
Table 9.1: Voice coding schemes supported on the air interface....190
Table 9.2: CVSD parameter values. The values are based on a 16 bit signed number output from the accumulator. 192
Table 11.1: Recommended Frequency Mask for Bluetooth....200

APPENDIX A: GENERAL AUDIO RECOMMENDATIONS

MAXIMUM SOUND PRESSURE

It is the sole responsibility of each manufacturer to design their audio products in a safe way with regards to injury to the human ear. The Bluetooth Specification doesn't specify maximum sound pressure from an audio device.

OTHER TELEPHONY NETWORK REQUIREMENTS

It is the sole responsibility of each manufacturer to design the Bluetooth audio product so that it meets the regulatory requirements of all telephony networks that it may be connected to.

AUDIO LEVELS FOR BLUETOOTH

Audio levels shall be calculated as Send Loudness Rating, SLR, and Receive Loudness Rating, RLR. The calculation methods are specified in ITU-T Recommendation P.79.

The physical test set-up for Handsets and Headsets is described in ITU-T Recommendation P.51 and P.57

The physical test set-up for speakerphones and "Vehicle hands-free systems" is specified in ITU-T Recommendation P.34.

A general equation for computation of loudness rating (LR) for telephone sets is given by ITU-T recommendations P.79 and is given by

$$LR = -\frac{10}{m}\log_{10}\left(\sum_{i=N_1}^{N_2} 10^{m(s_i - w_i)/10}\right), \qquad \text{(EQ 19)}$$

where

m is a constant (~ 0.2).

w_i = weighting coefficient (different for the various LRs).

S_i = the sensitivity at frequency F_i, of the electro-acoustic path

N_1,N_2, consecutive filter bank numbers (Art. Index: 200-4000 Hz)

(EQ 19) on page 198 is used for calculating the (SLR) according to Figure 11.1 on page 199, and (RLR) according to Figure 11.2 on page 199. When calculating LRs one must only include those parts of the frequency band where an actual signal transmission can occur in order to ensure that the additive property of LRs is retained. Therefore ITU-T P.79 uses only the frequency band 200-4000 Hz in LR computations.

MICROPHONE PATH

SLR measurement model

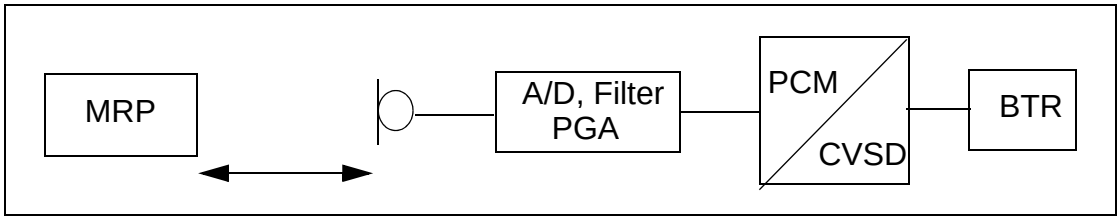

Figure 11.1: SLR measurement set-up.

LOUDSPEAKER PATH

RLR measurement model

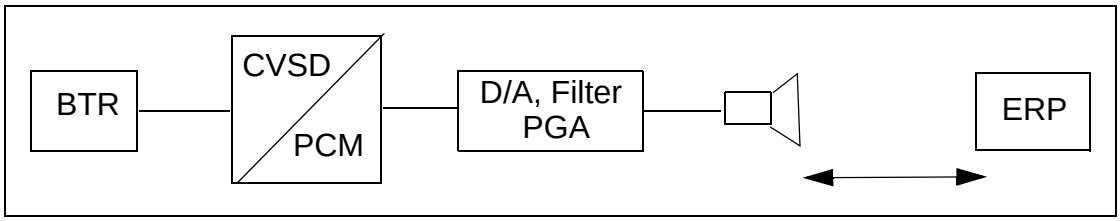

Figure 11.2: RLR measurement set-up.

BLUETOOTH VOICE INTERFACE

The specification for the Bluetooth voice interface should follow in the first place the *ITU-T Recommendations P.79*, which specifies the loudness ratings for telephone sets. These recommendations give general guidelines and specific algorithms used for calculating the loudness ratings of the audio signal with respect to Ear Reference Point (ERP).

For Bluetooth voice interface to the different cellular system terminals, loudness and frequency recommendations based on the cellular standards should be used. For example, GSM 03.50 gives recommendation for both the loudness ratings and frequency mask for a GSM terminal interconnection with Bluetooth.

1- The output of the CVSD decoder are 16-bit linear PCM digital samples, at a sampling frequency of 8 ksample/second. Bluetooth also supports 8-bit log PCM samples of A-law and μ-law type. The sound pressure at the ear reference point for a given 16-bit CVSD sample, should follow the sound pressure level given in the cellular standard specification.

2- A maximum sound pressure which can be represented by a 16-bit linear PCM sample at the output of the CVSD decoder should be specified according to the loudness rating, in ITU P.79 and at PGA value of 0 dB. Programmable Gain Amplifiers (PGAs) are used to control the audio level at the terminals by the user. For conversion between various PCM representations: A-law, μ-law and linear PCM, ITU-T G.711, G.712, G.714 give guidelines and PCM value relationships. Zero-code suppression based on ITU-T G.711 is also recommended to avoid network mismatches.

FREQUENCY MASK

For interfacing a Bluetooth terminal to a digital cellular mobile terminal, a compliance of the CVSD decoder signal to the frequency mask given in the cellular standard, is recommended to guarantee correct function of the speech coders. A recommendation for a frequency mask is given in the Table 11.1 below. The Figure 11.3 below shows a plot of the frequency mask for Bluetooth (solid line). The GSM frequency mask (dotted line) is shown in Figure 11.3 for comparison.

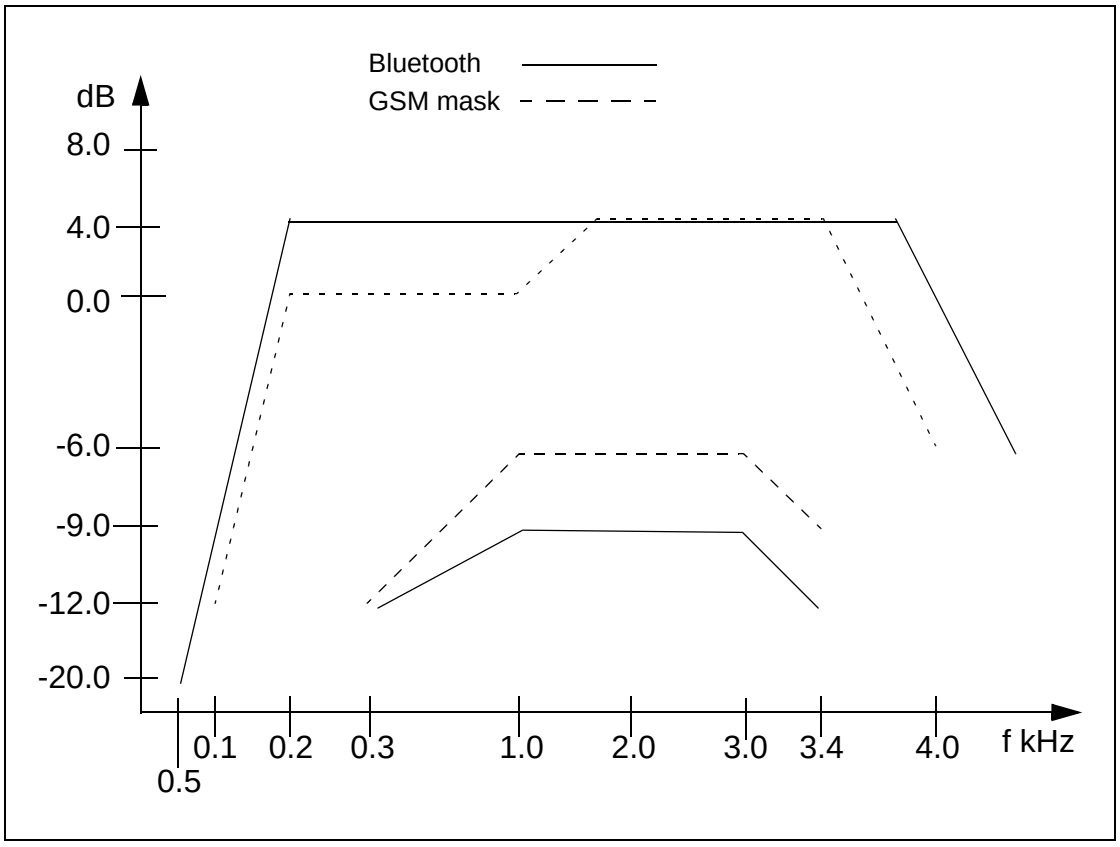

Figure 11.3: Plot of recommended frequency mask for Bluetooth. The GSM send frequency mask is given for comparison (dotted line)

Frequency (Hz)	Upper Limit (dB)	Lower Limit (dB)
50	-20	-
300	4	-12
1000	4	-9
2000	4	-9
3000	4	--9
3400	4	-12
4000	0	-

Table 11.1: Recommended Frequency Mask for Bluetooth

APPENDIX B: TIMERS

This appendix contains a list of Baseband timers related to inactivity timeout defined in this specification. Definitions and default values of the timers are listed below

All timer values are given in slots.

LIST OF TIMERS

inquiryTO

The *inquiryTO* defines the number of slots the **inquiry** substate shall last. The timer value may be changed by the host. HCI provides a command to change the timer value.

pageTO

The *pageTO* defines the number of slots the **page** substate can last before a response is received. The timer value may be changed by the host. HCI provides a command to change the timer value.

pageRespTO

In the slave, it defines the number of slots the slave shall await the master's response, FHS packet, after sending the page acknowledgment ID packet. In the master, *pageRespTO* defines the number of slots the master should wait for the FHS packet acknowledgment before returning to **page** substate. Both master and slave units should use the same value for this timeout, to ensure common page/scan intervals after reaching *pageRespTO*.

The *pageRespTO* value is 8 slots.

newconnectionTO

Every time a new connection is started through paging, scanning, role switch or unparking, the master sends a POLL packet as the first packet in the new connection. Transmission and acknowledgment of this POLL packet is used to confirm the new connection. If the POLL packet is not received by the slave or the response packet is not received by the master for *newconnectionTO* number of slots, both the master and the slave should return to the previous substate.

newconnectionTO value is 32 slots.

supervisionTO

The *supervisionTO* is used by both the master and slave to monitor link loss. If a device does not receive any packets that pass the HEC check and have the proper LT_ADDR for a period of *supervisionTO*, it should reset the link. The supervision timer keeps running in Hold mode, Sniff mode and Park state.

The *supervisionTO* value may be changed by the host. HCI provides a command to change the timer value. At the baseband level a default valueequivalent to 20 seconds should be used.

APPENDIX C: RECOMMENDATIONS FOR AFH OPERATION IN PARK, HOLD, AND SNIFF

The three possible AFH operation modes for an AFH capable slave in Park state, Hold mode, and Sniff mode are the same three AFH operation modes used during **CONNECTION** state:

- *Enabled* (using the same AHS as slaves in the **CONNECTION** state)
- *Enabled* (using AHS(79))
- *Disabled*

The master may place an AFH capable slave in any of the three AFH operating modes.

Operation at the Master

A master that has one or more slaves in park, hold, or sniff and decides to update them simultaneously shall schedule an *AFH_Instant* for a time that allows it to update all these slaves (as well as its active slaves) with the new adaptation.

A master that has multiple slaves with non-overlapping “wake” times (e.g. slaves in sniff mode with different timing parameters) may keep them *enabled* on the same adaptation provided that its scheduling of the *AFH_Instant* allows enough time to update them all.

This timing is summarized in the figure below. In this example the master decides that a hop sequence adaptation is required. However it cannot schedule an *AFH_Instant* until it has informed its active slave, its slave in hold, its slave in sniff, and had time to un-park its parked slaves.

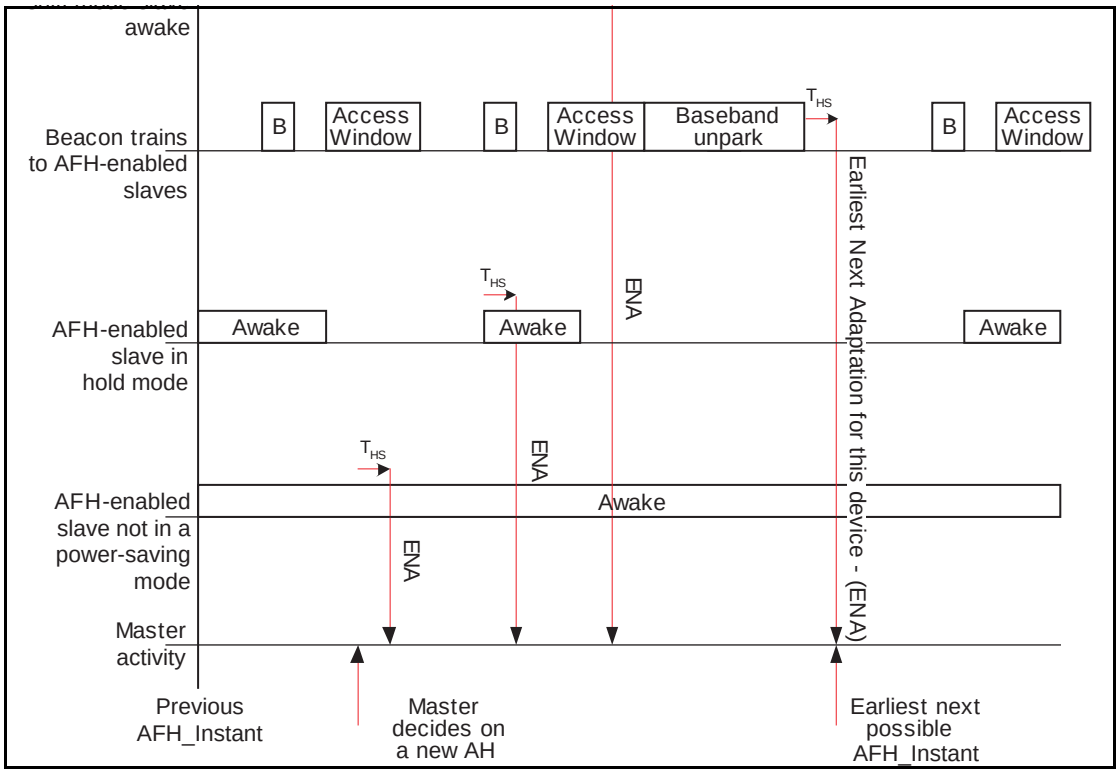

Figure 11.4: Timing constraint on AFH_Instant with slaves in park, hold and sniff

Operation in park

A slave that is in the Park state cannot send or receive any AFH LMP messages. Once the slave has left the Park state the master may subsequently update the slave's adaptation.

AFH Operation in Sniff

Once a slave has been placed in sniff mode, the master may periodically change its AHS without taking the slave out of sniff mode.

AFH Operation in Hold

A slave that is in hold mode cannot send or receive any LMP messages. Once the slave has left hold mode the master may subsequently update the slave's adaptation.

Core System Package [Controller volume]
Part C

LINK MANAGER PROTOCOL SPECIFICATION

This specification describes the Link Manager Protocol (LMP) which is used for link set-up and control. The signals are interpreted and filtered out by the Link Manager on the receiving side and are not propagated to higher layers.

CONTENTS

1 Introduction 209

2 General Rules 210

2.1 Message Transport 210
2.2 Synchronization 210
2.3 Packet Format 211
2.4 Transactions 212
2.4.1 LMP Response Timeout 213
2.5 Error Handling 213
2.5.1 Transaction Collision Resolution 214
2.6 Procedure Rules 214
2.7 General Response Messages 215
2.8 LMP Message Constraints 215

3 Device Features 216

3.1 General Description 216
3.2 Feature Definitions 216
3.3 Feature Mask Definition 222
3.4 Link Manager Interoperability policy 224

4 Procedure Rules 225

4.1 Connection Control 225
4.1.1 Connection Establishment 225
4.1.2 Detach 226
4.1.3 Power Control 227
4.1.4 Adaptive Frequency Hopping 231
4.1.5 Channel Classification 234
4.1.6 Link Supervision 236
4.1.7 Channel Quality Driven Data Rate Change (CQDDR) 237
4.1.8 Quality of Service (QoS) 238
4.1.9 Paging Scheme Parameters 240
4.1.10 Control of Multi-slot Packets 241
4.1.11 Enhanced Data Rate 241
4.1.12 Encapsulated LMP PDUs 243
4.2 Security 244
4.2.1 Authentication 244
4.2.2 Pairing 246
4.2.3 Change Link Key 249
4.2.4 Change Current Link Key Type 250

4.2.5 Encryption 252
4.2.6 Request Supported Encryption Key Size 259
4.2.7 Secure Simple Pairing 259
4.3 Informational Requests 272
4.3.1 Timing Accuracy 272
4.3.2 Clock Offset 274
4.3.3 LMP version 274
4.3.4 Supported Features 275
4.3.5 Name Request 277
4.4 Role Switch 278
4.4.1 Slot Offset 278
4.4.2 Role Switch 279
4.5 Modes of Operation 281
4.5.1 Hold Mode 281
4.5.2 Park State 283
4.5.3 Sniff Mode 290
4.6 Logical Transports 294
4.6.1 SCO Logical Transport 294
4.6.2 eSCO Logical Transport 297
4.7 Test Mode 302
4.7.1 Activation and Deactivation of Test Mode 302
4.7.2 Control of Test Mode 303
4.7.3 Summary of Test Mode PDUs 303

5 Summary 307
5.1 PDU Summary 307
5.2 Parameter Definitions 317
5.3 LMP Encapsulated 328
5.4 Default Values 329

6 List of Figures 330

7 List of Tables 334

1 INTRODUCTION

The Link Manager Protocol (LMP) is used to control and negotiate all aspects of the operation of the Bluetooth connection between two devices. This includes the set-up and control of logical transports and logical links, and for control of physical links.

The Link Manager Protocol is used to communicate between the Link Managers (LM) on the two devices which are connected by the ACL logical transport. All LMP messages shall apply solely to the physical link and associated logical links and logical transports between the sending and receiving devices.

The protocol is made up of a series of messages which shall be transferred over the ACL-C logical link on the default ACL logical transport between two devices. LMP messages shall be interpreted and acted-upon by the LM and shall not be directly propagated to higher protocol layers.

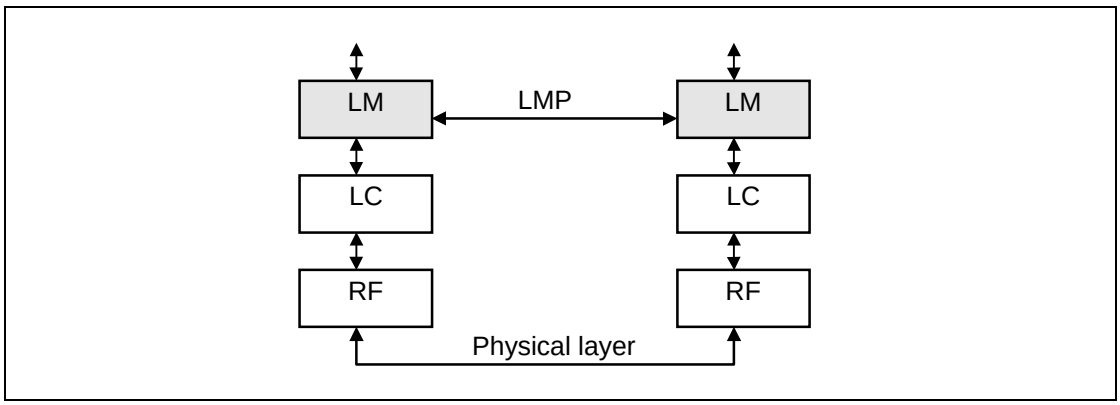

Figure 1.1: Link Manager Protocol signaling layer.

2 GENERAL RULES

2.1 MESSAGE TRANSPORT

LMP messages shall be exchanged over the ACL-C logical link that is carried on the default ACL logical transport (Baseband Specification, Section 4.4, on page 96). The ACL-C logical link is distinguished from the ACL-U (which carries L2CAP and user data) by the Logical Link Identifier (LLID) field carried in the payload header of variable-length packets (Baseband Specification, Section 6.6.2, on page 127).

The ACL-C has a higher priority than other traffic - see Baseband Specification, Section 5.6, on page 105.

The error detection and correction capabilities of the baseband ACL logical transport are generally sufficient for the requirements of the LMP. Therefore LMP messages do not contain any additional error detection information beyond what can be realized by means of sanity checks performed on the contents of LMP messages. Any such checks and protections to overcome undetected errors in LMP messages is an implementation matter.

2.2 SYNCHRONIZATION

This section is informative and explains why many of the LMP message sequences are defined as they are.

LMP messages are carried on the ACL-C logical link, which does not guarantee a time to deliver or acknowledge packets. LMP procedures take account of this when synchronizing state changes in the two devices. For example, criteria are defined that specify when a logical transport address (LT_ADDR) may be re-used after it becomes available due to a device leaving the piconet or entering the park state. Other LMP procedures, such as hold or role switch include the Bluetooth clock as a parameter in order to define a fixed synchronization point. The transitions into and out of sniff mode are protected with a transition mode.

The LC normally attempts to communicate with each slave no less often than every T_{poll} slots (see Section 4.1.8 on page 238) based on the T_{poll} for that slave.

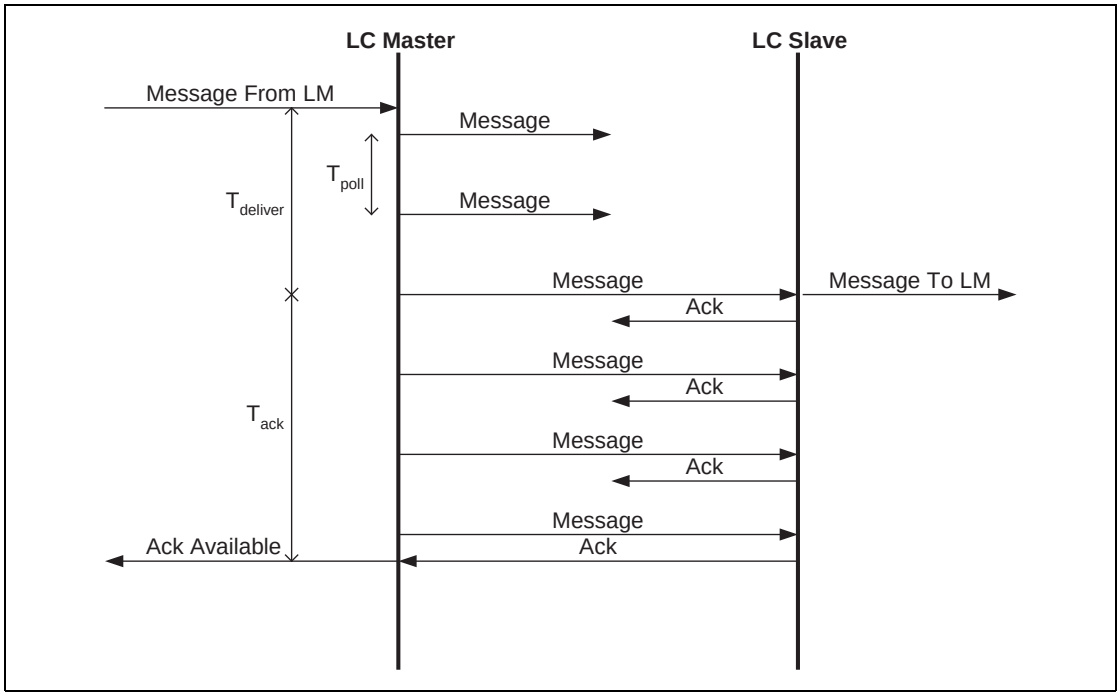

Figure 2.1: Transmission of a message from master to slave[1].

Figure 2.1 on page 211 illustrates the fundamental problem. It shows the transmission of a packet from the master to the slave in conditions of heavy interference for illustrative purposes. It is obvious that neither side can determine the value of either $T_{deliver}$ or T_{ack}. It is therefore not possible to use simple messages to identify uniquely the instant at which a state change occurs in the other device.

2.3 PACKET FORMAT

Each PDU is assigned either a 7 or a 15 bit opcode used to uniquely identify different types of PDUs, see Table 5.1 on page 307. The first 7 bits of the opcode and a transaction ID are located in the first byte of the payload body. If the initial 7 bits of the opcode have one of the special escape values 124-127 then an additional byte of opcode is located in the second byte of the payload and the combination uniquely identifies the PDU.

The FLOW bit in the packet header is always 1 and is ignored on reception.

If the PDU contains one or more parameters these are placed in the payload starting immediately after the opcode, i.e. at byte 2 if the PDU has a 7 bit opcode or byte 3 if the PDU has a 15 bit opcode. The number of bytes used

1. Note the diagram shows the limiting case where the master transmits the message at intervals of T_{poll}. In the case of heavy interference improved performance is gained by transmitting more often.

depends on the length of the parameters. All parameters have a little-endian format, i.e. the least significant byte is transferred first.

LMP messages shall be transmitted using DM1 packets, however if an HV1 SCO link is in use and the length of the payload is less than 9 bytes then DV packets may be used.

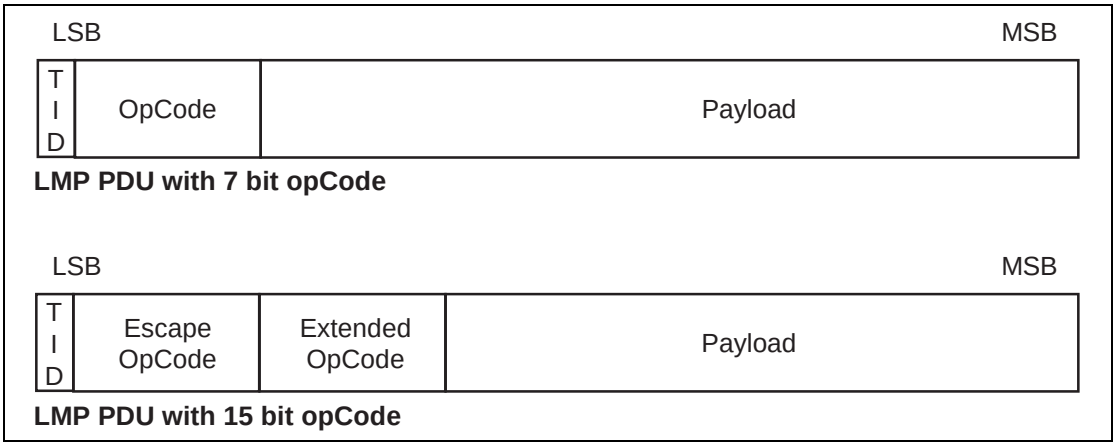

Figure 2.2: Payload body when LMP PDUs are sent.

2.4 TRANSACTIONS

The LMP operates in terms of transactions. A transaction is a connected set of message exchanges which achieve a particular purpose. All PDUs which form part of the same transaction shall have the same value for the transaction ID which is stored as part of the first byte of the opCode (see Section 2.3 on page 211).

The transaction ID is in the least significant bit. It shall be 0 if the PDU forms part of a transaction that was initiated by the master and 1 if the transaction was initiated by the slave.

Each sequence described in Section 4 on page 225 shall be defined as a transaction. For pairing, see Section 4.2.2 on page 246, and encryption, see Section 4.2.5 on page 252, all sequences belonging to each section shall be counted as one transaction and shall use the same transaction ID. For connection establishment, see Section 4.1.1 on page 225, LMP_host_connection_req and the response with LMP_accepted or LMP_not_accepted shall form one transaction and have the transaction ID of 0. LMP_setup_complete is a stand-alone PDU, which forms a transaction by itself.

For error handling, see Section 2.5 on page 213, the PDU to be rejected and LMP_not_accepted or LMP_not_accepted_ext shall form a single transaction.

2.4.1 LMP Response Timeout

The time between receiving a baseband packet carrying an LMP PDU and sending a baseband packet carrying a valid response PDU, according to the procedure rules in Section 4 on page 225, shall be less than the LMP Response Timeout. The value of this timeout is 30 seconds. Note that the LMP Response Timeout is applied not only to sequences described in Section 4 on page 225, but also to the series of the sequences defined as the transactions in Section 4 on page 225. It shall also be applied to the series of LMP transactions that take place during a period when traffic on the ACL-U logical link is disabled for the duration of the series of LMP transactions, for example during the enabling of encryption.

The LMP Response Timeout shall restart each time an LMP PDU which requires a reply is queued for transmission by the baseband.

2.5 ERROR HANDLING

If the LM receives a PDU with unrecognized opcode, it shall respond with LMP_not_accepted or LMP_not_accepted_ext with the error code *unknown LMP PDU.* The opcode parameter that is echoed back is the unrecognized opcode.

If the LM receives a PDU with invalid parameters, it shall respond with LMP_not_accepted or LMP_not_accepted_ext with the error code *invalid LMP parameters*.

If the maximum response time, see Section 2.4 on page 212, is exceeded or if a link loss is detected (see Baseband Specification, Section 3.1, on page 94), the party that waits for the response shall conclude that the procedure has terminated unsuccessfully.

Erroneous LMP messages can be caused by errors on the channel or systematic errors at the transmit side. To detect the latter case, the LM should monitor the number of erroneous messages and disconnect if it exceeds a threshold, which is implementation-dependent.

When the LM receives a PDU that is not allowed, and the PDU normally expects a PDU reply, for example LMP_host_connection_req or LMP_unit_key, the LM shall return PDU LMP_not_accepted or LMP_not_accepted_ext with the error code *PDU not allowed*. If the PDU normally doesn't expect a reply, for example LMP_sres or LMP_temp_key, the PDU will be ignored.

The reception of an optional PDU which is not supported shall be handled in one of two ways: if the LM simply does not know the opcode (e.g. it was added at a later version of the specification) it shall respond with LMP_not_accepted or LMP_not_accepted_ext with the error code *unknown LMP PDU*. If the LM recognizes the PDU as optional but unsupported then it shall reply with LMP_not_accepted or LMP_not_accepted_ext with the error code *unsupported LMP feature* if the PDU would normally generate a reply otherwise no reply is generated.

2.5.1 Transaction Collision Resolution

Since LMP PDUs are not interpreted in real time, collision situations can occur where both LMs initiate the same procedure and both cannot be completed. In this situation, the master shall reject the slave-initiated procedure by sending LMP_not_accepted or LMP_not_accepted_ext with the error code *LMP error transaction collision*. The master-initiated procedure shall then be completed.

Collision situations can also occur where both LMs initiate different procedures and both cannot be completed. In this situation, the master shall reject the slave-initiated procedure by sending LMP_not_accepted or LMP_not_accepted_ext with the error code *LMP error different transaction collision*. The master- initiated procedure shall then be completed.

2.6 PROCEDURE RULES

Each procedure is described and depicted with a sequence diagram. The following symbols are used in the sequence diagrams:

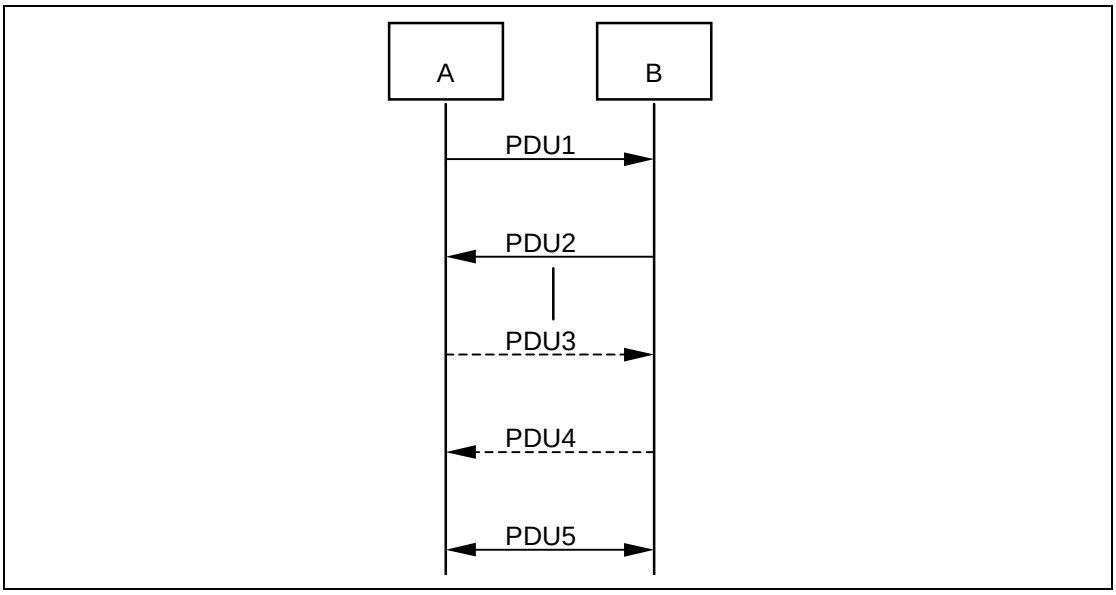

Figure 2.3: Symbols used in sequence diagrams.

PDU1 is a PDU sent from A to B. PDU2 is a PDU sent from B to A. PDU3 is a PDU that is optionally sent from A to B. PDU4 is a PDU that is optionally sent from B to A. PDU5 is a PDU sent from either A or B. A vertical line indicates that more PDUs can optionally be sent.

2.7 GENERAL RESPONSE MESSAGES

The PDUs LMP_accepted, LMP_accepted_ext, LMP_not_accepted and LMP_not_accepted_ext are used as response messages to other PDUs in a number of different procedures. LMP_accepted or LMP_accepted_ext includes the opcode of the message which is accepted. LMP_not_accepted or LMP_not_accepted_ext includes the opcode of the message which is not accepted and the error code why it is not accepted.

LMP_accepted_ext and LMP_not_accepted_ext shall be used when the opcode is 15 bits in length. LMP_accepted and LMP_not_accepted shall be used when the opcode is 7 bits in length.

M/O	PDU	Contents
M	LMP_accepted	op code
M	LMP_not_accepted	op code error code
O	LMP_accepted_ext	escape op code extended op code
O	LMP_not_accepted_ext	escape op code extended op code error code

Table 2.1: General response messages.

2.8 LMP MESSAGE CONSTRAINTS

This section is informative.

- No LMP message shall exceed the maximum payload length of a single DM1 packet i.e. 17 bytes in length (Baseband Specification, Section 6.5.4.1, on page 123).
- All LM messages are of fixed length apart from those sent using broadcast in park state.
- The LMP version number shall not be used to indicate the presence or absence of functionality.

3 DEVICE FEATURES

3.1 GENERAL DESCRIPTION

Each PDU is either Mandatory or Optional as defined by the M/O field in the tables of Section 4 on page 225. An M in this field shall indicate that support for the feature is mandatory. An O in this field shall indicate that support for the PDU is optional and it shall be followed by the number(s) of the feature(s) involved in brackets.

All features added after the 1.1 specification have associated LMP feature bits. Support of these features may be made “mandatory” by the qualification process but the LM still considers them to be optional since it must interoperate with older devices which do not support them.

The LM does not need to be able to transmit a PDU which is optional. Support of optional PDUs is indicated by a device's features mask. The features mask can be read (see Section 4.3.4 on page 275). An LM shall not send or be sent any PDU which is incompatible with the features signalled in its or its peer's features mask, as detailed in Section 3.2.

3.2 FEATURE DEFINITIONS

Feature	Definition
Extended features	This feature indicates whether the device is able to support the extended features mask using the LMP sequences defined in Section 4.3.4 on page 275.
Timing accuracy	This feature indicates whether the LM supports requests for timing accuracy using the sequence defined in Section 4.3.1 on page 272.
Enhanced inquiry scan	This feature indicates whether the device is capable of supporting the enhanced inquiry scan mechanism as defined in Baseband Specification, Section 8.4.1, on page 159. The presence of this feature has only local meaning and does not imply support for any additional LMP PDUs or sequences.
Interlaced inquiry scan	This feature indicates whether the device is capable of supporting the interlaced inquiry scan mechanism as defined in Baseband Specification, Section 8.4.1, on page 159. The presence of this feature has only local meaning and does not imply support for any additional LMP PDUs or sequences.
Interlaced page scan	This feature indicates whether the device is capable of supporting the interlaced page scan mechanism as defined in Baseband Specification, Section 8.3.1, on page 149. The presence of this feature has only local meaning and does not imply support for any additional LMP PDUs or sequences.

Table 3.1: Feature Definitions

Feature	Definition
RSSI with inquiry results	This feature bit shall be set if the "Extended Inquiry Response" feature bit is set. This feature indicates whether the device is capable of reporting the RSSI with inquiry results as defined in Baseband Specification, Section 8.4.2, on page 160. The presence of this feature has only local meaning and does not imply support for any additional LMP PDUs or sequences.
Extended Inquiry Response	This feature indicates whether the device supports extended inquiry response as defined in the Baseband specification. If this bit is set, the "RSSI with inquiry results" feature bit shall also be set.
Paging parameter negotiation	This feature indicates whether the LM is capable of supporting the signaling of changes in the paging scheme as defined in Section 4.1.9 on page 240.
3 slot packets	This feature indicates whether the device supports the transmission and reception of both DM3 and DH3 packets for the transport of traffic on the ACL-U logical link.
5 slot packets	This feature indicates whether the device supports the transmission and reception of both DM5 and DH5 packets for the transport of traffic on the ACL-U logical link.
Flow control lag	This is defined as the total amount of ACL-U data that can be sent following the receipt of a valid payload header with the payload header flow bit set to 0 and is in units of 256 bytes. See further in Baseband Specification, Section 6.6.2, on page 127.
AFH capable slave	This feature indicates whether the device is able to support the Adaptive Frequency Hopping mechanism as a slave as defined in Baseband Specification, Section 2.3, on page 74 using the LMP sequences defined in Section 4.1.4 on page 231.
AFH classification slave	This feature indicates whether the device is able to support the AFH classification mechanism as a slave as defined in Baseband Specification, Section 8.6.8, on page 176 using the LMP sequences defined Section 4.1.5 on page 234.
AFH capable master	This indicates whether the device is able to support the Adaptive Frequency Hopping mechanism as a master as defined in Baseband Specification, Section 2.3, on page 74 using the LMP sequences defined in Section 4.1.4 on page 231.
AFH classification master	This feature indicate whether the device is able to support the AFH classification mechanism as a master as defined in Baseband Specification, Section 8.6.8, on page 176 using the LMP sequences defined Section 4.1.5 on page 234.
Power control	This feature indicates whether the device is capable of adjusting its transmission power. This feature indicates the ability to receive the LMP_incr_power and LMP_decr_power PDUs and transmit the LMP_max_power and LMP_min_power PDUs, using the sequences defined in Section 4.1.3 on page 227. These sequences may be used even if the remote device does not support the power control feature, as long as it supports the Power control requests feature.

Table 3.1: Feature Definitions

Feature	Definition
Power control requests	This feature indicates whether the device is capable of determining if the transmit power level of the other device should be adjusted and will send the LMP_incr_power and LMP_decr_power PDUs to request the adjustments. It indicates the ability to receive the LMP_max_power and LMP_min_power PDUs, using the sequences in Section 4.1.3 on page 227. These sequences may be used even if the remote device does not support the RSSI feature, as long as it supports the power control feature.
Enhanced power control	This feature indicates whether the device is able to support enhanced power control using the LMP sequences as defined in Section 4.1.3.1 on page 229. This feature bit shall only be set if the "power control" feature bit (bit 18) is set and if the "power control requests" feature bit (bit 9) is set.
Channel Quality Driven Data Rate	This feature indicates whether the LM is capable of recommending a packet type (or types) depending on the channel quality using the LMP sequences defined in section Section 4.1.7 on page 237.
Broadcast encryption	This feature indicates whether the device is capable of supporting broadcast encryption as defined in [Part H] Section 4.2 on page 935 and also the sequences defined in Section 4.2.6 on page 259 and Section 4.2.4 on page 250. Note: Devices compliant to versions of this specification 1.1 and earlier may support broadcast encryption even though this feature bit is not set.
Encryption	This feature shall be supported. This feature indicates whether the device supports the encryption of packet contents using the sequence defined in Section 4.2.5 on page 252.
Pause Encryption	When this feature bit is enabled on both sides, then the encryption pause/resume sequences shall be used. If either side does not support the Pause Encryption feature bit, then the encryption pause/resume sequences shall not be used.
Slot offset	This feature indicates whether the LM supports the transfer of the slot offset using the sequence defined in Section 4.4.1 on page 278.
Role switch	This feature indicates whether the device supports the change of master and slave roles as defined by baseband Section 8.6.5 on page 170 using the sequence defined in Section 4.4.2 on page 279.
Hold mode	This feature indicates whether the device is able to support Hold mode as defined in baseband Section 8.8 on page 181 using the LMP sequences defined in Section 4.5.1 on page 281.
Sniff mode	This feature indicates whether the device is able to support sniff mode as defined in baseband Section 8.7 on page 178 using the LMP sequences defined in Section 4.5.3 on page 290.
Sniff subrating	This feature indicates whether the device is able to support sniff subrating as defined in [PART B] Sniff Subrating on page 180 using the LMP sequences as defined in Sniff Subrating on page 292.This feature bit shall be set if the "Sniff mode" feature bit is set.

Table 3.1: Feature Definitions

Feature	Definition
Park state	This feature indicates whether the device is able to support Park state as defined in baseband Section 8.9 on page 182 using the LMP sequences defined in Section 4.5.2 on page 283.
SCO link	This feature shall indicate whether the device is able to support the SCO logical transport as defined in Baseband Specification, Section 4.3, on page 96, the HV1 packet defined in Baseband Specification, Section 6.5.2.1, on page 120 and receiving the DV packet defined in Baseband Specification, Section 6.5.2.4, on page 120 using the LMP sequence in Section 4.6.1 on page 294.
HV2 packets	This feature indicates whether the device is capable of supporting the HV2 packet type as defined in baseband Section 6.5.2.2 on page 120 on the SCO logical transport. Removed
HV3 packets	This feature indicates whether the device is capable of supporting the HV3 packet type as defined in baseband Section 6.5.2.3 on page 120 on the SCO logical transport.
µ-law log synchronous data	This feature indicates whether the device is capable of supporting µ-Law Log format data as defined in Baseband Specification, Section 9.1, on page 190 on the SCO and eSCO logical transports.
A-law log synchronous data	This feature indicates whether the device is capable of supporting A-Law Log format data as defined in Baseband Specification, Section 9.1, on page 190 on the SCO and eSCO logical transports.
CVSD synchronous data	This feature indicates whether the device is capable of supporting CVSD format data as defined in Baseband Specification, Section 9.2, on page 190 on the SCO and eSCO logical transports.
Transparent synchronous data	This feature indicates whether the device is capable of supporting transparent synchronous data as defined in Baseband Specification, Section 6.4.3, on page 114 on the SCO and eSCO logical transports.
Extended SCO link	This feature indicates whether the device is able to support the eSCO logical transport as defined Baseband Specification, Section 5.5, on page 105 and the EV3 packet defined in Baseband Specification, Section 6.5.3.1, on page 121 using the LMP sequences defined in Section 4.6.2 on page 297.
EV4 packets	This feature indicates whether the device is capable of supporting the EV4 packet type defined in Baseband Specification, Section 6.5.3.2, on page 121 on the eSCO logical transport.
EV5 packets	This feature indicates whether the device is capable of supporting the EV5 packet type defined in Baseband Specification, Section 6.5.3.3, on page 121 on the eSCO logical transport.
Enhanced Data Rate ACL 2 Mbps mode	This feature indicates whether the device supports the transmission and reception of 2-DH1 packets for the transport of traffic on the ACL-U logical link.

Table 3.1: Feature Definitions

Feature	Definition
Enhanced Data Rate ACL 3 Mbps mode	This feature indicates whether the device supports the transmission and reception of 3-DH1 packets for the transport of traffic on the ACL-U logical link. This feature bit shall only be set if the “Enhanced Data Rate ACL 2 Mbps mode” feature bit is set.
3-slot Enhanced Data Rate ACL packets	This feature indicates whether the device supports the transmission and reception of three-slot Enhanced Data Rate packets on the ACL-U logical link. This feature bit shall only be set if the “Enhanced Data Rate ACL 2 Mbps mode” feature bit is set.
5-slot Enhanced Data Rate ACL packets	This feature indicates whether the device supports the transmission and reception of 5-slot Enhanced Data Rate packets for the transport of traffic on the ACL-U logical link. This feature bit shall only be set if the “Enhanced Data Rate ACL 2 Mbps mode” feature bit is set.
Enhanced Data Rate eSCO 2 Mbps mode	This feature indicates whether the device supports the transmission and reception of 2-EV3 packets for the transport of traffic on the eSCO logical transport.
Enhanced Data Rate eSCO 3 Mbps mode	This feature indicates whether the device supports the transmission and reception of 3-EV3 packets for the transport of traffic on the eSCO logical transport. This feature bit shall only be set if the “Enhanced Data Rate eSCO 2 Mbps mode” feature bit is set.
3-slot Enhanced Data Rate eSCO packets	This feature indicates whether the device supports the transmission and reception of 3-slot Enhanced Data Rate packets for the transport of traffic on the eSCO logical transport. This feature bit shall only be set if the “Enhanced Data Rate eSCO 2 Mbps mode” feature bit is set.
Erroneous Data Reporting	This feature indicates whether the device is able to support the Packet_Status_Flag and the HCI commands "Write Default Erroneous Data Reporting" and "Read Default Erroneous Data Reporting". This feature bit may be set if at least one of the "SCO link" or "Extended SCO link" feature bits are set.
Link Supervision Timeout Changed Event	This feature bit indicates whether the device supports the sending the HCI Link Supervision Timeout Changed Event to the Host.
Non-flushable Packet Boundary Flag	This feature indicates that the device supports the capability to correctly handle HCI ACL Data Packets with a Packet_Boundary_Flag value of 00 (Non-Automatically-Flushable packet).
Secure Simple Pairing (Controller Support)	This feature indicates whether the Link Manager is capable of supporting the Secure Simple Pairing, Section 4.2.7, “Secure Simple Pairing,” on page 259.

Table 3.1: Feature Definitions

Feature	Definition
Secure Simple Pairing (Host Support)	This feature indicates whether the Host is capable of supporting the Secure Simple Pairing Section 4.2.7, “Secure Simple Pairing,” on page 259. If HCI is supported, this bit shall be set if Write Simple Pairing Mode has been issued to enable the Secure Simple Pairing feature. When HCI is not supported, this bit may be set using a vendor specific mechanism, This bit shall only be set if the Secure Simple Pairing (Controller Support) bit is set.
Encapsulated PDU	This feature indicates whether the device is capable of supporting the Encapsulated mechanism as defined in Section 4.1.12.1, “Sending an Encapsulated PDU,” on page 243. This feature shall be set if Secure Simple Pairing is supported.
Variable Inquiry TX Power Level	This feature indicates whether the device is capable of setting the TX power level for Inquiry.

Table 3.1: Feature Definitions

3.3 FEATURE MASK DEFINITION

The features are represented as a bit mask when they are transferred in LMP messages. For each feature a single bit is specified which shall be set to 1 if the feature is supported and set to 0 otherwise. The single exception is the flow control lag which is coded as a 3 bit field with the least significant bit in byte 2 bit 4 and the most significant bit in byte 2 bit 6. All removed, unknown. or unassigned feature bits shall be set to 0 and ignored upon receipt.

No.	Supported feature	Byte	Bit
0	3 slot packets	0	0
1	5 slot packets	0	1
2	Encryption	0	2
3	Slot offset	0	3
4	Timing accuracy	0	4
5	Role switch	0	5
6	Hold mode	0	6
7	Sniff mode	0	7
8	Park state	1	0
9	Power control requests	1	1
10	Channel quality driven data rate (CQDDR)	1	2
11	SCO link	1	3
12	HV2 packets	1	4
13	HV3 packets	1	5
14	μ-law log synchronous data	1	6
15	A-law log synchronous data	1	7
16	CVSD synchronous data	2	0
17	Paging parameter negotiation	2	1
18	Power control	2	2
19	Transparent synchronous data	2	3
20	Flow control lag (least significant bit)	2	4
21	Flow control lag (middle bit)	2	5
22	Flow control lag (most significant bit)	2	6
23	Broadcast Encryption	2	7
24	Reserved	3	0
25	Enhanced Data Rate ACL 2 Mbps mode	3	1

Table 3.2: Feature mask definitions (page 0)

No.	Supported feature	Byte	Bit
26	Enhanced Data Rate ACL 3 Mbps mode	3	2
27	Enhanced inquiry scan	3	3
28	Interlaced inquiry scan	3	4
29	Interlaced page scan	3	5
30	RSSI with inquiry results	3	6
31	Extended SCO link (EV3 packets)	3	7
32	EV4 packets	4	0
33	EV5 packets	4	1
34	Reserved	4	2
35	AFH capable slave	4	3
36	AFH classification slave	4	4
37	Reserved	4	5
38	Reserved	4	6
39	3-slot Enhanced Data Rate ACL packets	4	7
40	5-slot Enhanced Data Rate ACL packets	5	0
41	Sniff subrating	5	1
42	Pause encryption	5	2
43	AFH capable master	5	3
44	AFH classification master	5	4
45	Enhanced Data Rate eSCO 2 Mbps mode	5	5
46	Enhanced Data Rate eSCO 3 Mbps mode	5	6
47	3-slot Enhanced Data Rate eSCO packets	5	7
48	Extended Inquiry Response	6	0
51	Secure Simple Pairing	6	3
52	Encapsulated PDU	6	4
53	Erroneous Data Reporting	6	5
54	Non-flushable Packet Boundary Flag	6	6
56	Link Supervision Timeout Changed Event	7	0
57	Inquiry TX Power Level	7	1
58	Enhanced Power Control	7	2
63	Extended features	7	7

Table 3.2: Feature mask definitions (page 0)

NO	Supported Feature	Byte	Bit
64	Secure Simple Pairing (Host Support)	0	0

Table 3.3: Extended feature mask definition (page 1)

3.4 LINK MANAGER INTEROPERABILITY POLICY

Link managers of any version shall interpret using the lowest common subset of functionality by reading the LMP features mask (defined in Table 3.2 on page 222).

An optional LMP PDU shall only be sent to a device if the corresponding feature bit is set in its feature mask. The exception to this are certain PDUs (see Section 4.1.1 on page 225) which can be sent before the features mask is requested. Note: a later version device with a restricted feature set is indistinguishable from an earlier version device with the same features.

4 PROCEDURE RULES

4.1 CONNECTION CONTROL

4.1.1 Connection Establishment

After the paging procedure, LMP procedures for clock offset request, LMP version, supported features, name request and detach may then be initiated.

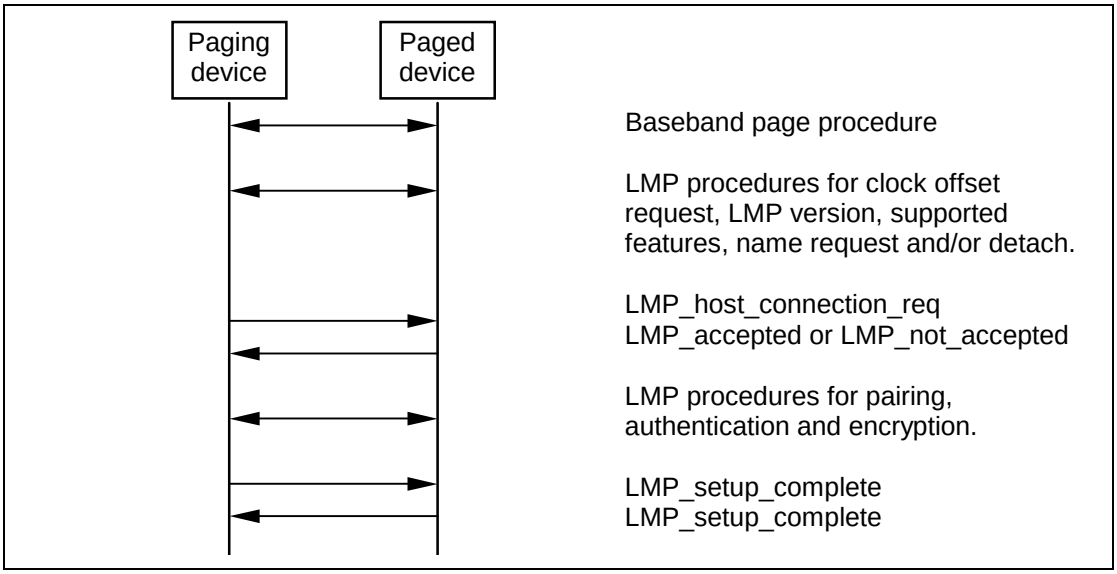

Figure 4.1: Connection establishment.

When the paging device wishes to create a connection involving layers above LM, it sends an LMP_host_connection_req PDU. When the other side receives this message, the host is informed about the incoming connection. The remote device can accept or reject the connection request by sending an LMP_accepted PDU or an LMP_not_accepted PDU. Alternatively, if the slave needs a role switch, see Section 4.4.2 on page 279, it sends an LMP_slot_offset PDU and LMP_switch_req PDU after it has received an LMP_host_connection_req PDU. If the role switch fails the LM shall continue with the creation of the connection unless this cannot be supported due to limited resources in which case the connection shall be terminated with an LMP_detach PDU with error code *other end terminated connection: low resources*. When the role switch has been successfully completed, the old slave will reply with an LMP_accepted PDU or an LMP_not_accepted PDU to the LMP_host_connection_req PDU (with the transaction ID set to 0).

If the paging device receives an LMP_not_accepted PDU in response to LMP_host_connection_req it shall immediately disconnect the link using the mechanism described in Section 4.1.2 on page 226.

If the LMP_host_connection_req PDU is accepted, LMP security procedures (pairing, authentication and encryption) may be invoked. When a device is not going to initiate any more security procedures during connection establishment it sends an LMP_setup_complete PDU. When both devices have sent LMP_setup_complete PDUs the traffic can be transferred on the ACL-U logical transport.

M/O	PDU	Contents
M	LMP_host_connection_req	-
M	LMP_setup_complete	-

Table 4.1: Connection establishment PDU

4.1.2 Detach

The connection between two Bluetooth devices may be detached anytime by the master or the slave. An error code parameter is included in the message to inform the other party of why the connection is detached.

M/O	PDU	Contents
M	LMP_detach	error code

Table 4.2: Detach PDU

The initiating LM shall pause traffic on the ACL-U logical link (see Baseband Specification, Section 5.3.1, on page 105). The initiating LM then queues the LMP_detach for transmission and it shall start a timer for $6*T_{poll}$ slots where T_{poll} is the poll interval for the connection. If the initiating LM receives the baseband acknowledgement before the timer expires it starts a timer for $3*T_{poll}$ slots. When this timer expires, and if the initiating LM is the master, the LT_ADDR(s) may be re-used immediately. If the initial timer expires then the initiating LM drops the link and starts a timer for $T_{linksupervisiontimeout}$ slots after which the LT_ADDR(s) may be re-used if the initiating LM is the master.

When the receiving LM receives the LMP_detach, it shall start a timer for $6*T_{poll}$ slots if it is the master and $3*T_{poll}$ if it is the slave. On timer expiration, the link shall be detached and, if the receiving LM is the master, the LT_ADDR(s) may be re-used immediately. If the receiver never receives the LMP_detach then a link supervision timeout will occur, the link will be detached, and the LT_ADDR may be re-used immediately.

If at any time during this or any other LMP sequence the Link supervision timeout expires then the link shall be terminated immediately and the LT_ADDR(S) may be re-used immediately.

If the connection is in hold mode, the initiating LM shall wait for hold mode to end before initiating the procedure defined above. If the connection is in sniff

mode or park state, the initiating LM shall perform the procedure to exit sniff mode or park state before initiating the procedure defined above. If the procedure to exit sniff mode or park state does not complete within the LMP response timeout (30 seconds) the procedure defined above shall be initiated anyway.

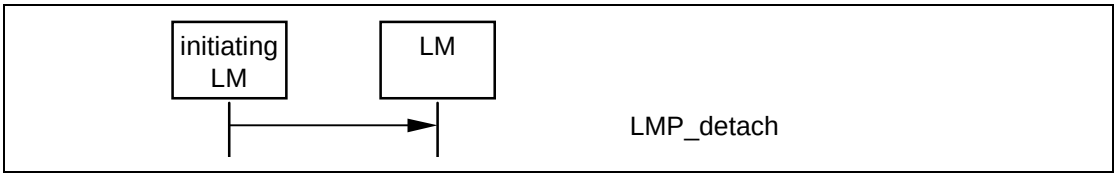

Sequence 1: Connection closed by sending LMP_detach.

4.1.3 Power Control

If the received signal characteristics differ too much from the preferred value of a Bluetooth device, it may request an increase or a decrease of the other device's transmit power level. A device's transmit power level is a property of the physical link, and affects all logical transports carried over the physical link. Power control requests carried over the default ACL-C logical link shall only affect the physical link associated with the requesting device's default ACL-C logical link; they shall not affect the power level used on the physical links to other slaves.

Two power control mechanisms are specified: legacy power control (see Table 4.3) and enhanced power control (see Table 4.4 and Section 4.1.3.1). A device that supports enhanced power control shall also support legacy power control.

M/O	PDU	Contents
O(9)	LMP_incr_power_req	for future use (1 Byte)
O(9)	LMP_decr_power_req	for future use (1 Byte)
O(18)	LMP_max_power	-
O(18)	LMP_min_power	-

Table 4.3: Legacy Power control PDU

M/O	PDU	Contents
O(58)	LMP_power_control_req	power_adjustment_request
O(58)	LMP_power_control_res	power_adjustment_response

Table 4.4: Enhanced Power control PDU

The power adjustment requests may be made at any time using the legacy power control mechanism following a successful baseband paging procedure and before the Link Manager supported features responses have been processed. After the Link Manager supported features responses have been pro-

cessed, if both devices support enhanced power control (see Section 4.1.3.1) then only enhanced power control shall be used. Otherwise, if either device supports only the legacy power control mechanism then only legacy power control shall be used.

If a device does not support power control requests this is indicated in the supported features list and thus no power control requests shall be sent after the supported features response has been processed. Prior to this time, a power control adjustment might be sent and if the recipient does not support power control it is allowed to send LMP_max_power in response to LMP_incr_power_req and LMP_min_power in response to LMP_decr_power_req. Another possibility is to send LMP_not_accepted with the error code *unsupported LMP feature*.

Upon receipt of an LMP_incr_power_req PDU or LMP_decr_power_req PDU the output power shall be increased or decreased one step. See Radio Specification Section 3 on page 34 for the definition of the step size.

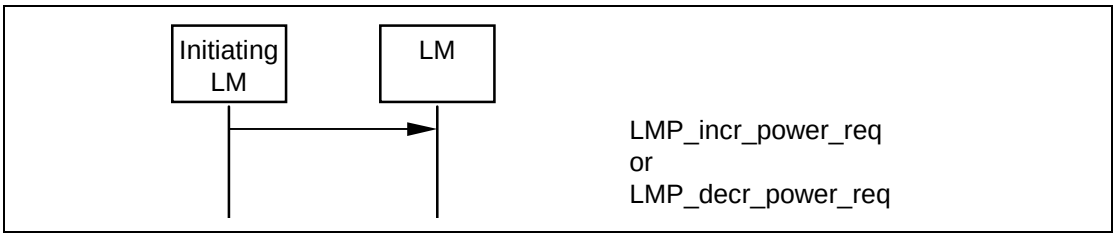

Sequence 2: A device requests a change of the other device's TX power.

If the receiver of LMP_incr_power_req is at maximum power LMP_max_power shall be returned. The device shall only request an increase again after having requested a decrease at least once. If the receiver of LMP_decr_power_req is at minimum power then LMP_min_power shall be returned and the device shall only request a decrease after having requested an increase at least once.

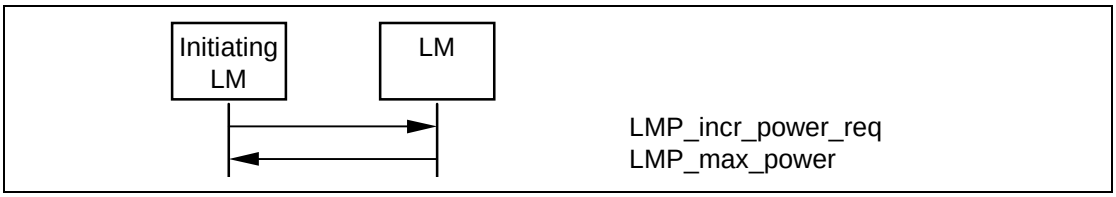

Sequence 3: The TX power cannot be increased.

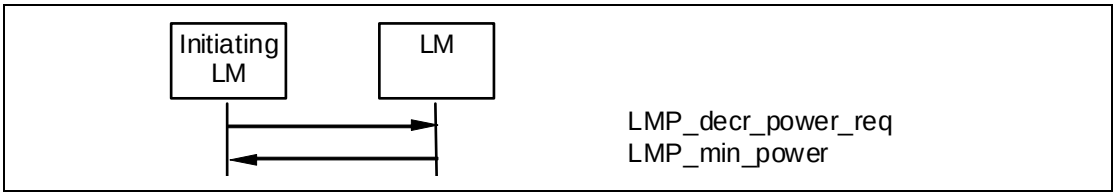

Sequence 4: The TX power cannot be decreased.

One byte is reserved in LMP_incr/decr_power_req for future use. The parameter value shall be 0x00 and ignored upon receipt.

4.1.3.1 Enhanced Power Control

Enhanced power control shall only be used when both devices support the enhanced power control LMP feature. Legacy power control shall not be used when both devices support the enhanced power control LMP feature.

4.1.3.1.1 Sending Enhanced Power Control Requests

To adjust the remote device's output power, a device shall send the LMP_power_control_req PDU with the power_adjustment_request parameter.

The power_adjustment_request parameter may be set to: one step up, one step down, or all the way to the max power level. The remote device shall respond with an LMP_power_control_res PDU. The responder shall transmit the LMP_power_control_res PDU at the new power level. Upon reception of the LMP_power_control_res PDU, the initiating device should restart any processes used to determine whether additional power level changes are required.

If the receiver of the LMP_power_control_req PDU has indicated that the output power levels for all of the supported modulation modes are at maximum the requesting device shall only request an increase again after having requested a decrease at least once. If the receiver of the LMP_power_control_req PDU has indicated that the output power levels for all of the supported modulation modes are at minimum the requesting device shall only request a decrease after having requested an increase at least once.

A new LMP_power_control_req PDU shall not be sent until an LMP_power_control_res PDU has been received.

4.1.3.1.2 Responding to Enhanced Power Control Requests

When a device receives an LMP_power_control_req PDU with the power_control_adjust parameter set to "increment one step," at least one modulation shall be increased one step unless all supported modulations are at the maximum level. Modulations that would violate the relative power level between modulations (see [Vol. 2], Part A, Section 3) shall also increment one step.

When a device receives an LMP_power_control_req PDU with the power_control_adjust parameter set to "decrement one step", at least one modulation shall be decreased one step unless all supported modulations are at the minimum level. Modulations that would violate the relative power level

between modulations (see [Vol. 2], Part A, Section 3) shall also decrement one step.

When a device receives an LMP_power_control_req PDU with the power_control_adjust parameter set to "increment power to maximum value", each supported modulation mode shall be set to its maximum power level.

Note: See [Vol. 2], Part A, Section 3 for requirements on the relative power levels of different modulation modes.

The responding LM shall send the LMP_power_control_res PDU to indicate the status for every modulation. The power_adjustment_response parameter has three 2-bit fields indicating the status for each modulation mode: GFSK, DQPSK and 8DPSK. Each 2-bit field shall be set to one of the following values: *not supported*, *changed one step, max power*, or *min power*. The changed one step value shall only be used when the power level for that modulation mode has not reached the minimum or maximum level.

The responder shall transmit the LMP_power_control_res PDU at the new transmit power level and shall not change its power level until requested by the remote device by a subsequent LMP_power_control_req PDU.

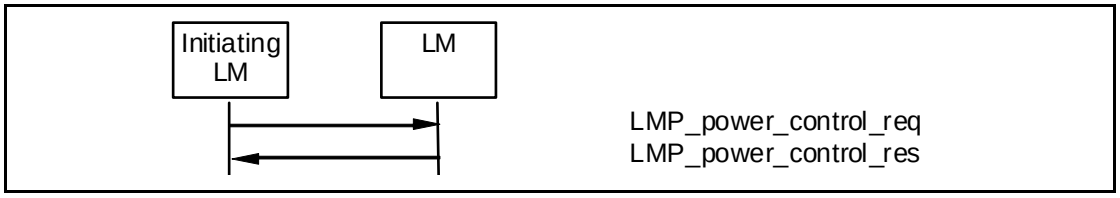

Sequence 5: A device responds to a power control request.

4.1.4 Adaptive Frequency Hopping

AFH is used to improve the performance of physical links in the presence of interference as well as reducing the interference caused by physical links on other devices in the ISM band. AFH shall only be used during the connection state.

M/O	PDU	Contents
O(35) Rx O(43) Tx	LMP_set_AFH	AFH_Instant, AFH_Mode, AFH_Channel_Map

Table 4.5: AFH PDU

The LMP_set_AFH PDU contains three parameters: AFH_Instant, AFH_Mode, and AFH_Channel_Map. The parameter, AFH_Instant, specifies the instant at which the hopset switch shall become effective. This is specified as a Bluetooth Clock value of the master's clock, that is available to both devices. The AFH instant is chosen by the master and shall be an even value at least $6*T_{poll}$ or 96 slots (whichever is greater) in the future, where T_{poll} is at least the longest poll interval for all AFH enabled physical links. The AFH_instant shall be within 12 hours of the current clock value. The parameter AFH_Mode, specifies whether AFH shall be enabled or disabled. The parameter AFH_Channel_Map, specifies the set of channels that shall be used if AFH is enabled.

When the LMP_set_AFH PDU is received the AFH instant shall be compared with the current Bluetooth clock value. If it is in the past then the AFH_instant has passed and the slave shall immediately configure the hop selection kernel (see Baseband Specification, Section 2.6.3, on page 88) with the new AFH_mode and AFH_channel_map specified in the LMP_set_AFH PDU. If it is in the future then a timer shall be started to expire at the AFH instant. When this timer expires it shall configure the hop selection kernel with the new AFH_mode and AFH_channel_map.

The master shall not send a new LMP_set_AFH PDU to a slave until it has received the baseband acknowledgement for any previous LMP_set_AFH addressed to that slave and the instant has passed.

Role switch while AFH is enabled shall follow the procedures define by Baseband Specification, Section 8.6.5, on page 170.

4.1.4.1 Master enables AFH

Prior to enabling AFH the master LM shall pause traffic on the ACL-U logical link (see Baseband Specification, Section 5.3.1, on page 105). The master shall then enable AFH on a physical link by sending the LMP_set_AFH PDU with AFH_mode set to AFH_enabled, the AFH_channel_map parameter containing the set of used and unused channels, and an AFH_instant. The LM shall not calculate the AFH instant until after traffic on the ACL-U logical link has been stopped. The master considers the physical link to be AFH_enabled once the baseband acknowledgement has been received and the AFH_instant has passed. Once the baseband acknowledgement has been received the master shall restart transmission on the ACL-U logical link.

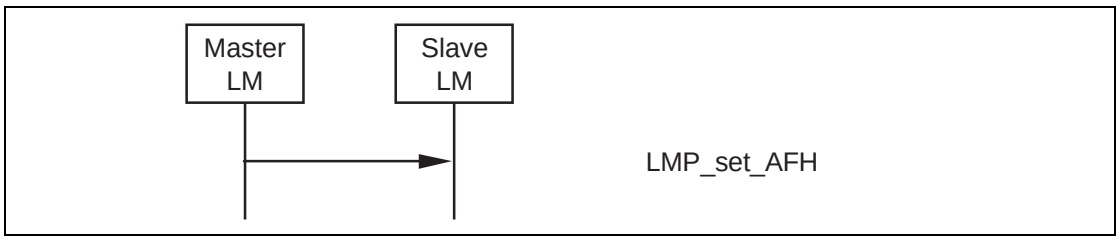

Sequence 6: Master Enables AFH.

4.1.4.2 Master Disables AFH

Prior to disabling AFH the master LM shall pause traffic on the ACL-U logical link (Baseband Specification, Section 5.3.1, on page 105). The master shall then disable AFH operation on a physical link by sending the LMP_set_AFH PDU with AFH_mode set to AFH_disabled and an AFH_instant. The AFH_channel_map parameter is not valid when AFH_mode is AFH_disabled. The LM shall not calculate the AFH instant until after traffic on the ACL-U logical link has been stopped. The master considers the physical link to have entered AFH_disabled operation once the baseband acknowledgement has been received and the AFH_instant has passed. Once the baseband acknowledgement has been received the master shall restart transmission on the ACL-U logical link.

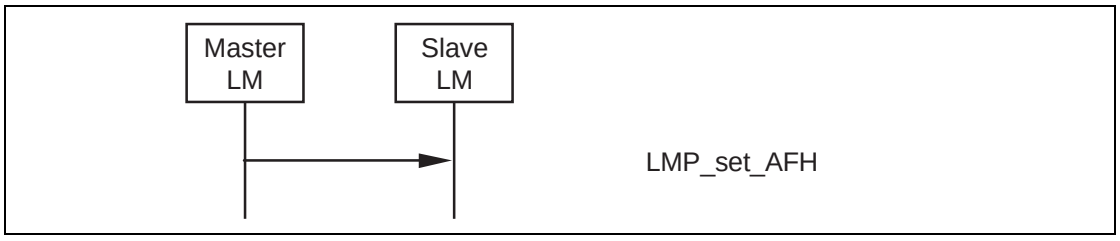

Sequence 7: Master disables AFH.

4.1.4.3 Master updates AFH

A master shall update the AFH parameters on a physical link by sending the LMP_set_AFH PDU with AFH_mode set to AFH_enabled, an AFH_instant and a new AFH_channel_map. The master shall consider the slave to have the updated AFH parameters once the baseband acknowledgement has been received and the AFH_instant has passed.

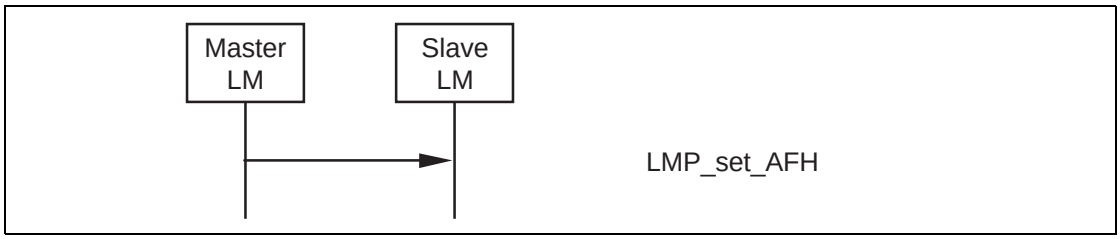

Sequence 8: Master Updates AFH.

4.1.4.4 AFH operation in Park, Hold, and Sniff modes

A slave in Park, Hold or Sniff shall retain the AFH_mode and AFH_channel_map prior to entering those modes. A master may change the AFH_mode while a slave is in sniff.

A master that receives a request from an AFH_enabled slave to enter Park, Hold, or Sniff and decides to operate the slave using a different hop sequence shall respond with an LMP_set_AFH PDU specifying the new hop sequence.

The master continues with the LMP signaling, for Park, Hold or Sniff initiation, once the baseband acknowledgement for the LMP_set_AFH PDU has been received. Optionally, the master may delay the continuation of this LMP signaling until after the instant. An AFH_capable_slave device shall support both of these cases.

A master that receives a request from an AFH_enabled slave to enter Park, Hold or Sniff and decides not to change the slave's hop sequence shall respond exactly as it would do without AFH. In this case, AFH operation has no effect on the LMP signaling.

4.1.5 Channel Classification

A master may request channel classification information from a slave that is AFH_enabled.

A slave that supports the AFH_classification_slave feature shall perform channel classification and reporting according to its AFH_reporting_mode. The master shall control the AFH_reporting_mode using the LMP_channel_classification_req PDU. The slave shall report its channel classification using the LMP_channel_classification PDU.

The slave shall report pairs of channels as *good*, *bad* or *unknown*. See Table 5.2 on page 317 for the detailed format of the AFH_Channel_Classification parameter. When one channel in the nth channel pair is good and the other channel is unknown the nth channel pair shall be reported as good. When one channel in the nth channel pair is bad and the other is unknown the nth channel pair shall be reported as bad. It is implementation dependent what to report when one channel in a channel pair is good and the other is bad.

M/O	PDU	Contents
O(36) Rx O(44) Tx	LMP_channel_classification_req	AFH_Reporting_Mode, AFH_Min_Interval, AFH_Max_Interval
O(36) Tx O(44) Rx	LMP_channel_classification	AFH_Channel_Classification

The LMP_channel_classification_req PDU contains three parameters: AFH_Reporting_Mode, AFH_Min_Interval, and AFH_Max_Interval. In the AFH_reporting_disabled state, the slave shall not generate any channel classification reports. The parameter AFH_min_interval, defines the minimum amount of time from the last LMP_channel_classification command that was sent before the next LMP_channel_classification PDU may be sent. The parameter AFH_max_interval, defines the maximum amount of time between the change in the radio environment being detected by a slave and its generation of an LMP_channel_classification PDU. The AFH_max_interval shall be equal to or larger than AFH_min_interval.

The AFH_reporting_mode parameter shall determine if the slave is in the AFH_reporting_enabled or AFH_reporting_disabled state. The default state, prior to receipt of any LMP_channel_classification_req PDUs, shall be AFH_reporting_disabled.

AFH_reporting_mode is implicitly set to the AFH_reporting_disabled state when any of the following occur:

- Establishment of a connection at the baseband level
- Master-slave role switch
- Entry to park state operation
- Entry to hold mode operation

AFH_reporting_mode is implicitly restored to its former value when any of the following occur:

- Exit from park state operation
- Exit from hold mode
- Failure of Master-slave role switch

4.1.5.1 Channel classification reporting enabling and disabling

A master enables slave channel classification reporting by sending the LMP_channel_classification_req PDU with the AFH_reporting_mode parameter set to AFH_reporting_enabled.

When a slave has had classification reporting enabled by the master it shall send the LMP_channel_classification PDU according to the information in the latest LMP_channel_classification_req PDU. The LMP_channel_classification PDU shall not be sent if there has been no change in the slave's channel classification.

A master disables slave channel classification reporting by sending the LMP_channel_classification_req PDU with the AFH_reporting_mode parameter set to AFH_reporting_disabled.

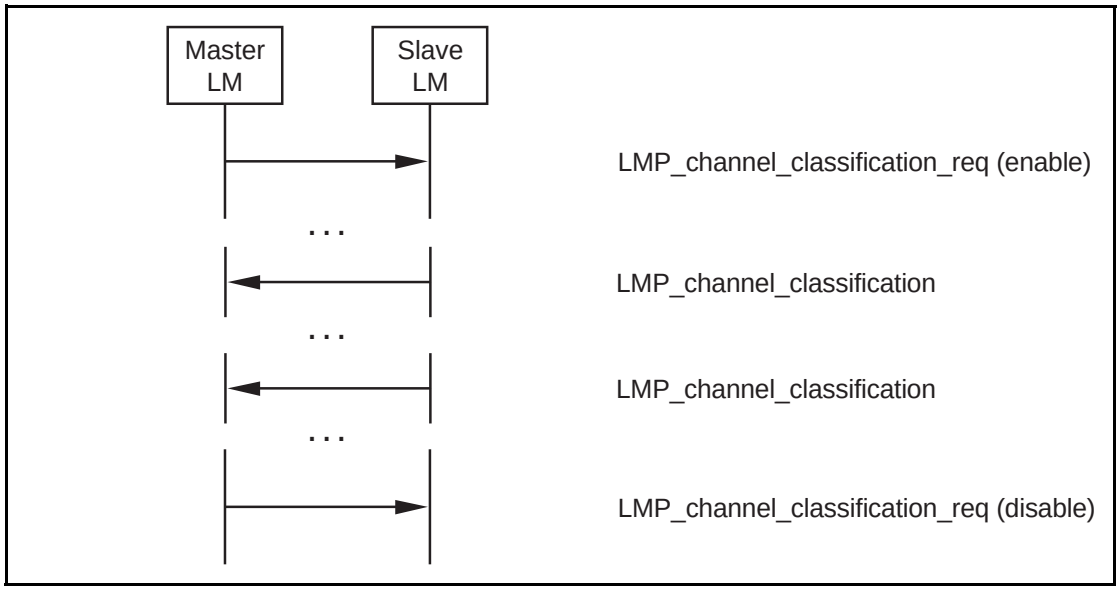

Sequence 9: Channel classification reporting.

4.1.6 Link Supervision

Each physical link has a timer that is used for link supervision. This timer is used to detect physical link loss caused by devices moving out of range, or being blocked by interference, a device's power-down, or other similar failure cases. Link supervision is specified in Baseband Specification, Section 3.1, on page 94.

M/O	PDU	Contents
M	LMP_supervision_timeout	supervision timeout

Table 4.6: Set supervision timeout PDU

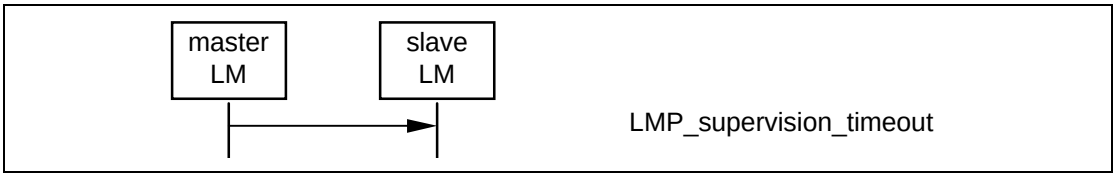

Sequence 10: Setting the link supervision timeout.

4.1.7 Channel Quality Driven Data Rate Change (CQDDR)

The data throughput for a given packet type depends on the quality of the RF channel. Quality measurements in the receiver of one device can be used to dynamically control the packet type transmitted from the remote device for optimization of the data throughput. Device A sends the LMP_auto_rate PDU once to notify device B to enable this feature. Once enabled, device B may request packet type(s) that A should transmit by sending the LMP_preferred_rate PDU. This PDU has a parameter which determines the preferred error coding (with or without 2/3FEC) and optionally the preferred size in slots of the packets. Device A is not required to change to the packet type specified by this parameter. Device A shall not send a packet that is larger than max slots (see Section 4.1.10 on page 241) even if the preferred size is greater than this value.

The data rate parameter includes the preferred rate for Basic Rate and Enhanced Data Rate modes. When operating in Basic Rate mode, the device shall use bits 0-2 to determine the preferred data rate. When operating in Enhanced Data Rate mode, the device shall use bits 3-6 to determine the preferred data rate. For devices that support Enhanced Data Rate, the preferred rates for both Basic Rate and Enhanced Data Rate modes shall be valid at all times.

These PDUs may be sent at any time after connection setup is completed.

M/O	PDU	Contents
O(10)	LMP_auto_rate	-
O(10)	LMP_preferred_rate	data rate

Table 4.7: Quality-driven change of the data rate PDU

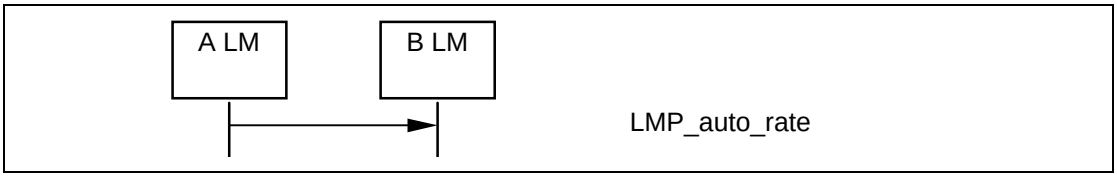

Sequence 11: A notifies B to enable CQDDR

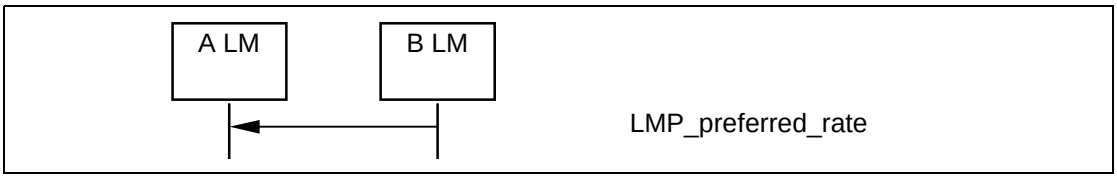

Sequence 12: B sends A a preferred packet type

4.1.8 Quality of Service (QoS)

The LM provides QoS capabilities. A poll interval, T_{poll}, that is defined as the maximum time between transmissions from the master to a particular slave on the ACL logical transport, is used to support bandwidth allocation and latency control - see Baseband Specification, Section 8.6.1, on page 165 for details. The poll interval is guaranteed in the active and sniff modes except when there are collisions with page, page scan, inquiry and inquiry scan, during time critical LMP sequences in the current piconet and any other piconets in which the Bluetooth device is a member, and during critical baseband sequences (such as the page response, initial connection state until the first POLL, and master slave switch). These PDUs may be sent at anytime after connection setup is completed.

Master and slave negotiate the number of repetitions for broadcast packets (N_{BC}), see Baseband Specification, Section 7.6.5, on page 146.

M/O	PDU	Contents
M	LMP_quality_of_service	poll interval N_{BC}
M	LMP_quality_of_service_req	poll interval N_{BC}

Table 4.8: Quality of Service PDU

4.1.8.1 Master Notifies Slave of the Quality of Service

The master notifies the slave of the new poll interval and N_{BC} by sending the LMP_quality_of_service PDU. The slave cannot reject the notification.

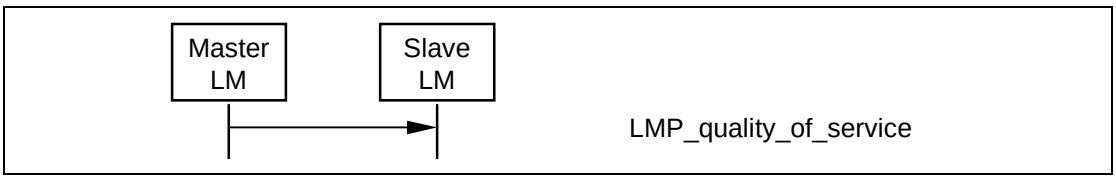

Sequence 13: Master notifies slave of quality of service.

4.1.8.2 Device requests new quality of service

Either the master or the slave may request a new poll interval and N_{BC} by sending an LMP_quality_of_service_req PDU. The parameter N_{BC} is meaningful only when it is sent by a master to a slave. For transmission of LMP_quality_of_service_req PDUs from a slave, this parameter shall be ignored by the master. The request can be accepted or rejected. This allows the master and slave to dynamically negotiate the quality of service as needed.

The selected poll interval by the slave shall be less than or equal to the specified Access Latency for the outgoing traffic of the ACL link (see L2CAP "Quality of Service (QoS) Option" on page 75 in Vol. 3).

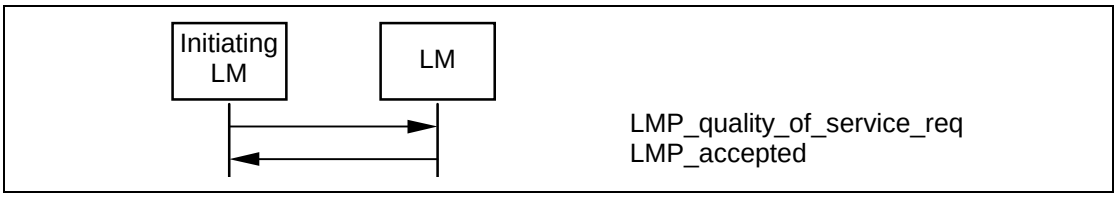

Sequence 14: Device accepts new quality of service

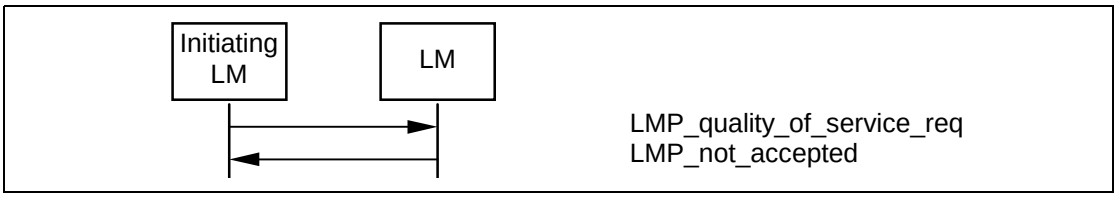

Sequence 15: Device rejects new quality of service.

4.1.9 Paging Scheme Parameters

LMP provides a means to negotiate the paging scheme parameters that are used the next time a device is paged.

M/O	PDU	Contents
O(17)	LMP_page_mode_req	paging scheme paging scheme settings
O(17)	LMP_page_scan_mode_req	paging scheme paging scheme settings

Table 4.9: Paging scheme request PDU

4.1.9.1 Page Mode

This procedure is initiated from device A and negotiates the paging scheme used when device A pages device B. Device A proposes a paging scheme including the parameters for this scheme and device B can accept or reject. On rejection the old setting shall not be changed. A request to switch to a reserved paging scheme shall be rejected.

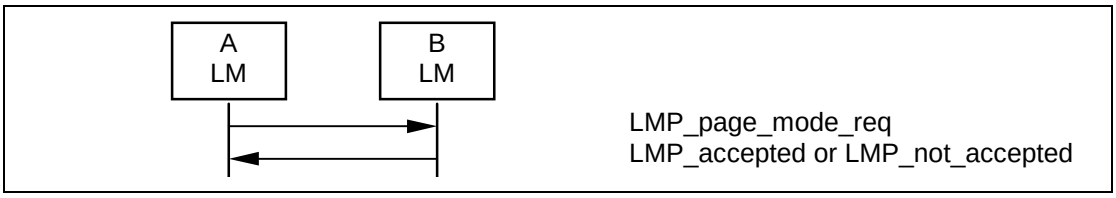

Sequence 16: Negotiation for page mode.

4.1.9.2 Page Scan Mode

This procedure is initiated from device A and negotiates the paging scheme and paging scheme settings used when device B pages device A. Device A proposes a paging scheme and paging scheme settings and device B may accept or reject. On reject the old setting is not changed. A request specifying the mandatory scheme shall be accepted. A request specifying a non-mandatory scheme shall be rejected. This procedure should be used when device A changes its paging scheme settings. A slave should also send this message to the master after connection establishment, to inform the master of the slave's current paging scheme and paging scheme settings.

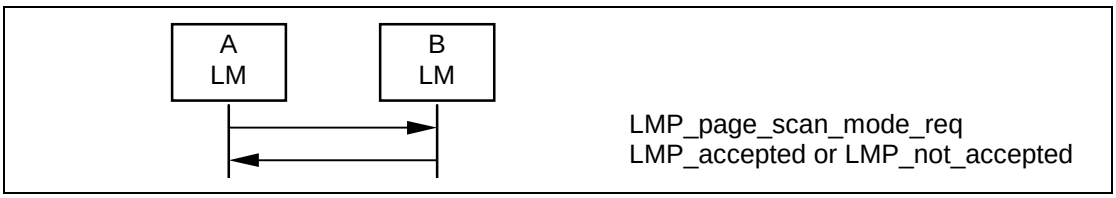

Sequence 17: Negotiation for page scan mode

4.1.10 Control of Multi-slot Packets

The number of consecutive slots used by a device on an ACL-U logical link can be limited. It does not affect traffic on the eSCO links where the packet sizes are defined as part of link setup. A device allows the remote device to use a maximum number of slots by sending the PDU LMP_max_slot providing max slots as parameter. Each device can request to use a maximal number of slots by sending the PDU LMP_max_slot_req providing max slots as parameter. After a new connection, as a result of page, page scan role switch or unpark, the default value is 1 slot. These PDUs can be sent at anytime after connection setup is completed.

M/O	PDU	Contents
M	LMP_max_slot	max slots
M	LMP_max_slot_req	max slots

Table 4.10: Multi-slot packet control PDU

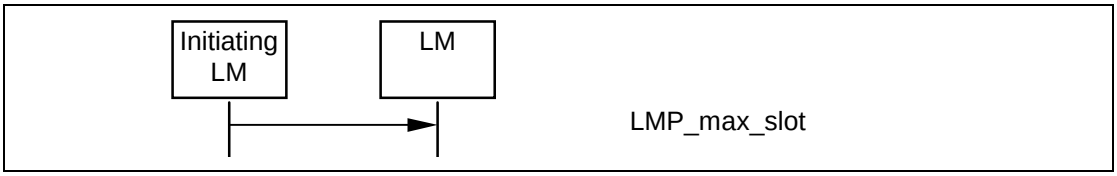

Sequence 18: Device allows Remote Device to use a maximum number of slots.

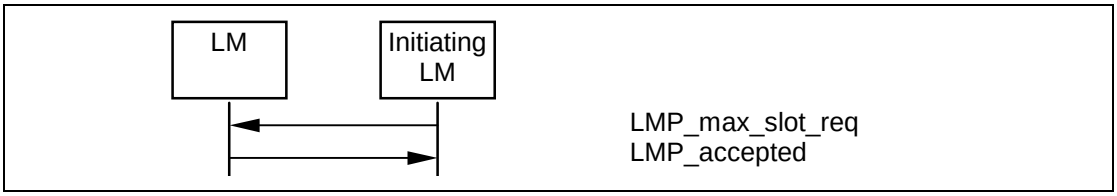

Sequence 19: Device requests a maximum number of slots. Remote Device accepts.

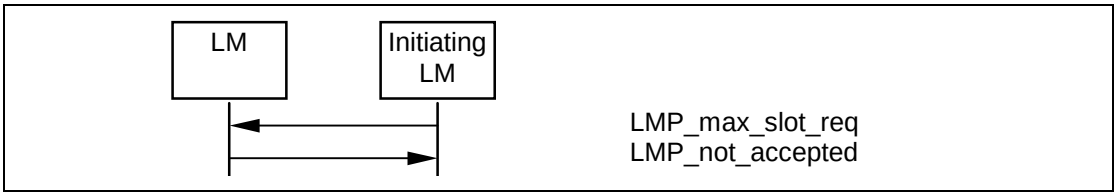

Sequence 20: Device requests a maximum number of slots. Remote Device rejects.

4.1.11 Enhanced Data Rate

A device may change the packet type table, ptt, to select which if any of the packets and optional modulation modes are to be used on an ACL logical transport.

Either the master or the slave may request a new packet type table and therefore thepackets and modulation mode to be used on this ACL link. After a new

baseband connection, as a result of page or page scan, the default value for ptt shall be 0.

The change of the modulation mode for an ACL logical transport shall not affect the packet and packet types used for an associated SCO logical transport on the same LT_ADDR.

Note: Enhanced Data Rate eSCO links are negotiated using the LMP eSCO link_req as described in section 4.6.2.

Before changing the packet type table, the initiator shall finalize the transmission of the current ACL packet with ACL-U information and shall stop ACL-U transmissions. It shall then send the LMP_packet_type_table_req PDU.

If the receiver rejects the change, then it shall respond with an LMP_not_accepted_ext PDU.

If the receiver accepts the change, then it shall finalize the transmission of the current ACL packet with ACL-U information and shall stop ACL-U transmissions, it shall change to the new packet type table and shall respond with an LMP_accepted_ext PDU. When it receives the baseband level acknowledgement for the LMP_accepted_ext PDU it shall restart ACL-U transmissions.

When the initiator receives an LMP_not_accepted_ext PDU the initiator shall restart ACL-U transmissions.

When the initiator receives an LMP_accepted_ext PDU it shall change the packet type table and restart ACL-U transmissions.

M/O	PDU	Contents
O(25)	LMP_packet_type_table_req	packet type table

Table 4.11: Enhanced Data Rate PDUs

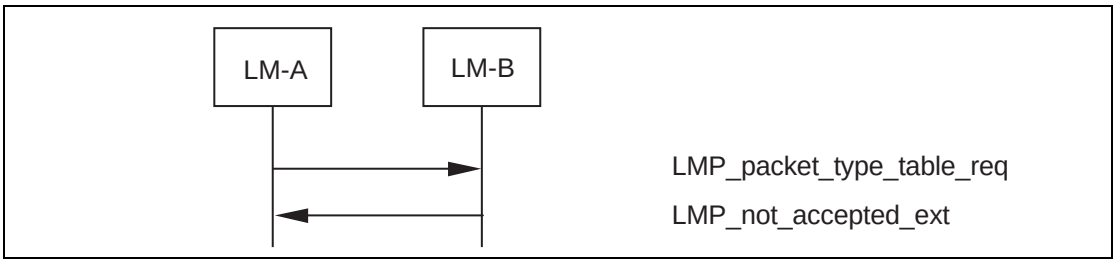

Sequence 21: Packet type table change is rejected.

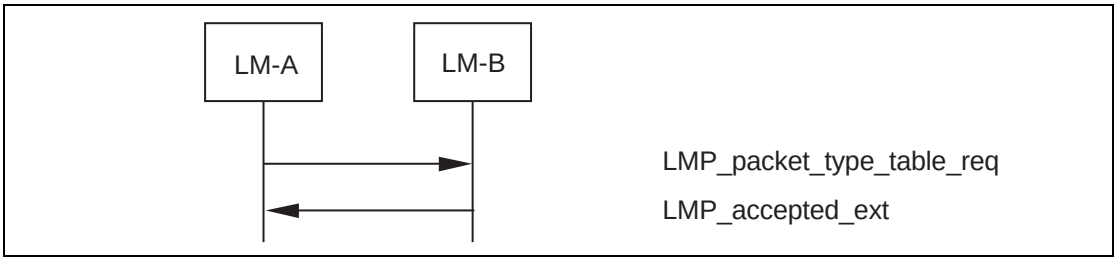

Sequence 22: Packet type table change is accepted.

4.1.12 Encapsulated LMP PDUs

Some transactions require sending LMP payload data that is longer than 16 octets. To enable a link manager to send a large PDU, an encapsulated LMP PDU is defined. An encapsulated LMP PDU is composed of a minimum of two LMP messages, a header PDU and one or more payload PDUs.

M/O	PDU	Contents
O(52)	LMP_encapsulated_header	encapsulated major type encapsulated minor type encapsulated payload length
O(52)	LMP_encapsulated_payload	encapsulated data

Table 4.12: Encapsulated LMP PDUs

4.1.12.1 Sending an Encapsulated PDU

The LMP_encapsulated_header PDU shall be sent by the initiating device when it needs to send an encapsulated PDU. This PDU shall be either accepted or rejected using the LMP_accepted or LMP_not_accepted PDUs. If the major and minor types are not supported the PDU shall be rejected with error code Unsupported LMP Parameter Value. If the LMP_encapsulated_header PDU is accepted, then one or more LMP_encapsulated_payload PDUs will be sent with the encapsulated data sent in sequence, 16 octets at a time, or if this is last packet, the correct number of octets and then zero padded.

Each LMP_encapsulated_payload PDU shall be accepted or rejected. If the LMP_encapsulated_header PDU is rejected, then the opcode in the LMP_not_accepted PDU shall be the opcode for the LMP_encapsulated_header and not the encapsulated major type or encapsulated minor type. If the LMP_encapsulated_payload PDU is rejected, then the opcode in the LMP_not_accepted PDU shall be the opcode for the LMP_encapsulated_payload.

A responding device may reject the final LMP_encapsulated_payload PDU after accepting the LMP_encapsulated_header PDU. This is so that the link

manager can still reject an encapsulated message after all the data has been received.

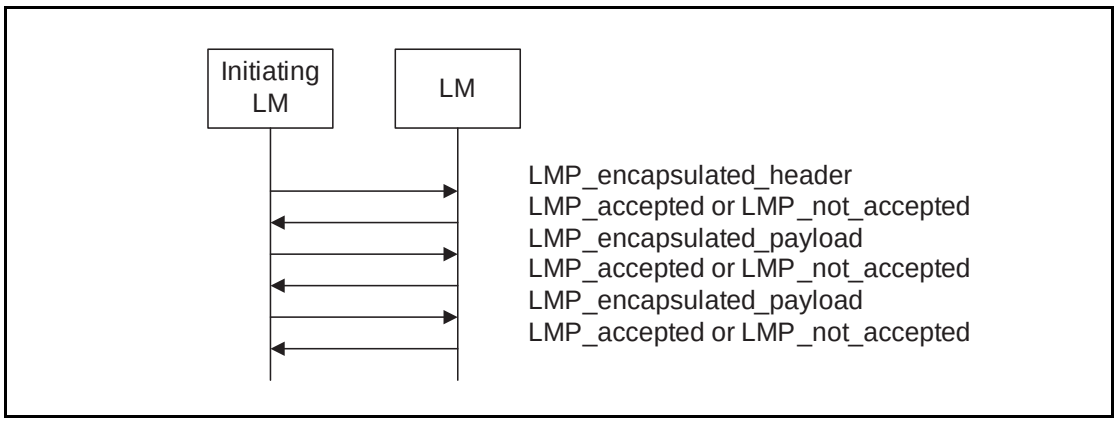

Sequence 23: Sending an encapsulated PDU

Between sending an LMP_encapsulated_header PDU and an LMP_encapsulated_payload PDU, or between each of the LMP_encapsulated_payload PDU, either device shall be able to send the following LMP PDUs without causing a "different transaction collision" error.

- LMP_channel_classification
- LMP_decr_power_req
- LMP_detach
- LMP_incr_power_req
- LMP_max_power
- LMP_max_slot
- LMP_min_power
- LMP_preferred_rate
- LMP_set_AFH

4.2 SECURITY

4.2.1 Authentication

The authentication procedure is based on a challenge-response scheme as described in [Part H] Section 3.2.2 on page 928. The verifier sends an LMP_au_rand PDU that contains a random number (the challenge) to the claimant. The claimant calculates a response, that is a function of this challenge, the claimant's BD_ADDR and a secret key. The response is sent back to the verifier, that checks if the response was correct or not. The response shall be calculated as described in [Part H] Section 6.1 on page 947. A successful calculation of the authentication response requires that two devices share a secret key. This key is created as described in Section 4.2.2 on page 246. Both the master and the slave can be verifiers.

M/O	PDU	Contents
M	LMP_au_rand	random number
M	LMP_sres	authentication response

Table 4.13: Authentication PDUs

4.2.1.1 Claimant has Link Key

If the claimant has a link key associated with the verifier, it shall calculate the response and sends it to the verifier with LMP_sres. The verifier checks the response. If the response is not correct, the verifier can end the connection by sending an LMP_detach PDU with the error code *authentication failure,* see Section 4.1.2 on page 226.

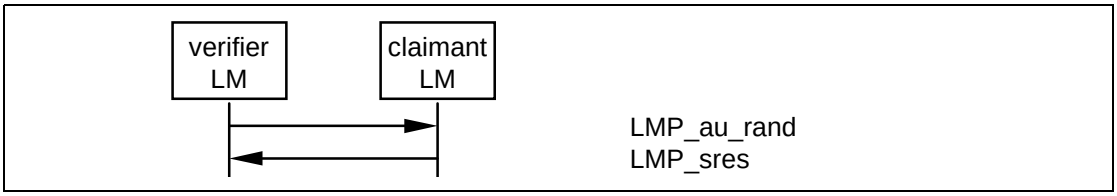

Sequence 24: Authentication. Claimant has link key.

Upon reception of an LMP_au_rand, an LM shall reply with LMP_sres before initiating its own authentication.

Note: There can be concurrent requests caused by the master and slave simultaneously initiating an authentication. The procedures in Section 2.5.1 on page 214 assures that devices will not have different Authenticated Ciphering Offset (ACO, see [Part H] Section 6.1 on page 947) when they calculate the encryption key.

4.2.1.2 Claimant has no Link Key

If the claimant does not have a link key associated with the verifier it shall send an LMP_not_accepted PDU with the error code **PIN** 0x06 ([Part D] Section 2.6) or *key missing* after receiving an LMP_au_rand PDU.

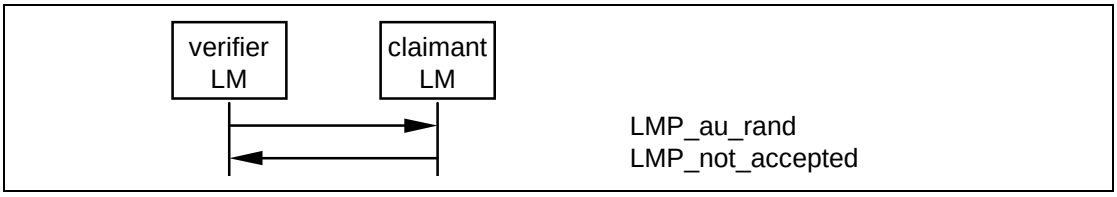

Sequence 25: Authentication fails. Claimant has no link key.

4.2.1.3 Repeated Attempts

The scheme described in [Part H] Section 5.1 on page 946 shall be applied when an authentication fails. This will prevent an intruder from trying a large number of keys in a relatively short time.

4.2.2 Pairing

When two devices do not have a common link key an initialization key (K_{init}) shall be created using either the pairing or Secure Simple Pairing procedures. When pairing is used, K_{init} shall be created based on a PIN, and a random number and a BD_ADDR. K_{init} shall be created as specified in [Part H] Section 6.3 on page 951. When both devices have calculated K_{init} the link key shall be created, and a mutual authentication is performed. The pairing procedure starts with a device sending an LMP_in_rand PDU; this device is referred to as the "initiating LM" or "initiator" in Section 4.2.2.1 on page 246 - Section 4.2.2.5 on page 249. The other device is referred to as the "responding LM" or "responder". The PDUs used in the pairing procedure are:

M/O	PDU	Contents
M	LMP_in_rand	random number
M	LMP_au_rand	random number
M	LMP_sres	authentication response
M	LMP_comb_key	random number
M	LMP_unit_key	key

Table 4.14: Pairing PDUs

All sequences described in Section 4 on page 225, including the mutual authentication after the link key has been created, shall form a single transaction. The transaction ID from the first LMP_in_rand shall be used for all subsequent sequences.

4.2.2.1 Responder Accepts Pairing

When the initiator sends an LMP_in_rand PDU and the responder shall reply with an LMP_accepted PDU. Both devices shall then calculate K_{init} based on the BD_ADDR of the responder and the procedure continues with creation of the link key; see Section 4.2.2.4 on page 248.

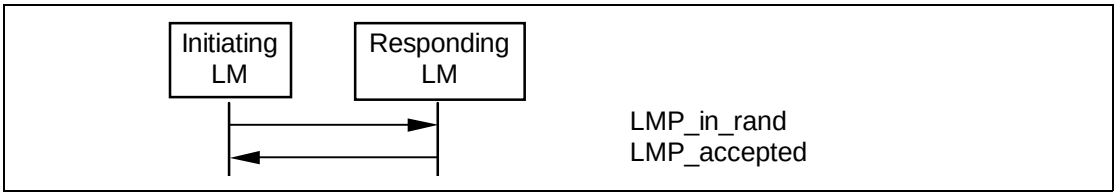

Sequence 26: Pairing accepted. Responder has a variable PIN. Initiator has a variable or fixed PIN.

4.2.2.2 Responder has a Fixed PIN

If the responder has a fixed PIN it shall generate a new random number and send it back in an LMP_in_rand PDU. If the initiator has a variable PIN it shall accept the LMP_in_rand PDU and shall respond with an LMP_accepted PDU. Both sides shall then calculate K_{init} based on the last IN_RAND and the BD_ADDR of the initiator. The procedure continues with creation of the link key; see Section 4.2.2.4 on page 248.

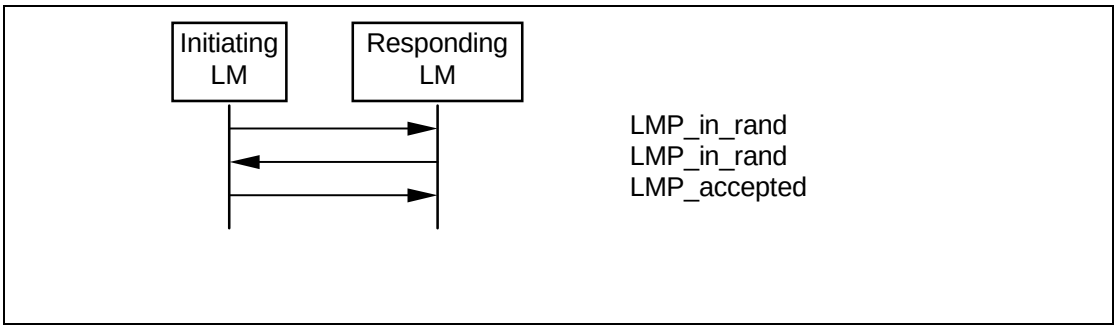

Sequence 27: Responder has a fixed PIN and initiator has a variable PIN.

If the responder has a fixed PIN and the initiator also has a fixed PIN, the second LMP_in_rand shall be rejected by the initiator sending an LMP_not_accepted PDU with the error code *pairing not allowed*.

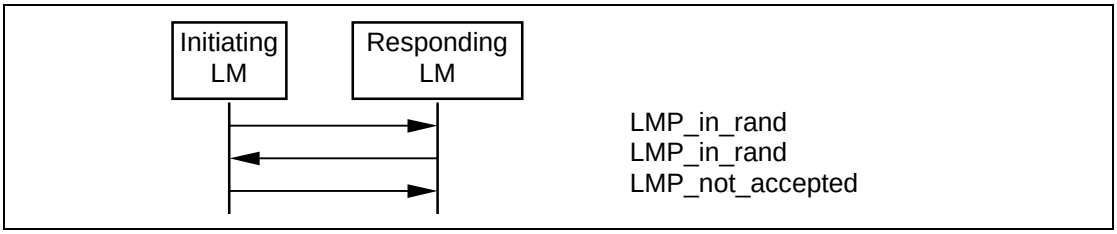

Sequence 28: Both devices have a fixed PIN.

4.2.2.3 Responder Rejects Pairing

If the responder rejects pairing it shall send an LMP_not_accepted PDU with the error code *pairing not allowed* after receiving an LMP_in_rand PDU.

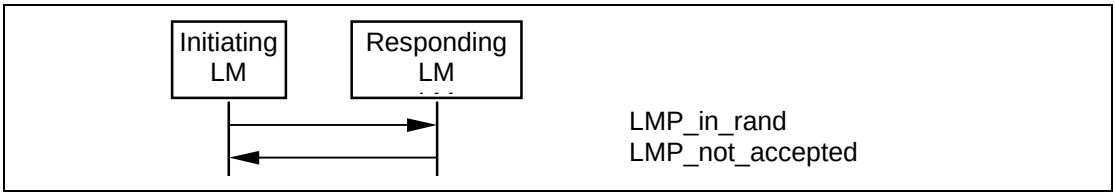

Sequence 29: Responder rejects pairing.

4.2.2.4 Creation of the Link Key

When K_{init} is calculated in both devices the link key shall be created. This link key will be used in the authentication between the two devices for all subsequent connections until it is changed; see Section 4.2.3 on page 249 and Section 4.2.4 on page 250. The link key created in the pairing procedure will either be a combination key or one of the device's unit keys. The following rules shall apply to the selection of the link key:

- if one device sends an LMP_unit_key PDU and the other device sends LMP_comb_key, the unit key will be the link key.
- if both devices send an LMP_unit_key PDU, the master's unit key will be the link key.
- if both devices send an LMP_comb_key PDU, the link key shall be calculated as described in [Part H] Section 3.2 on page 927.

The content of the LMP_unit_key PDU is the unit key bitwise XORed with K_{init}. The content of the LMP_comb_key PDU is LK_RAND bitwise XORed with K_{init}. Any device configured to use a combination key shall store the link key.

The use of unit keys is deprecated since it is implicitly insecure.

When the new link key has been created mutual authentication shall be performed to confirm that the same link key has been created in both devices. After mutual authentication, the initiating device shall pause and immediately resume encryption to produce a new encryption key. Note that this will cause a new encryption key to be generated from the ACO created during the mutual authentication process, and the random number sent in the LMP_start_encryption_req PDU which occurs in response to the resumption of encryption.

After mutual authentication, if encryption is enabled, the initiating device shall pause and immediately resume encryption to produce a new encryption key. Note that this will cause a new encryption key to be generated from the ACO created during the mutual authentication process, and the random number sent in the LMP_start_encryption_req PDU which occurs in response to the resumption of encryption.

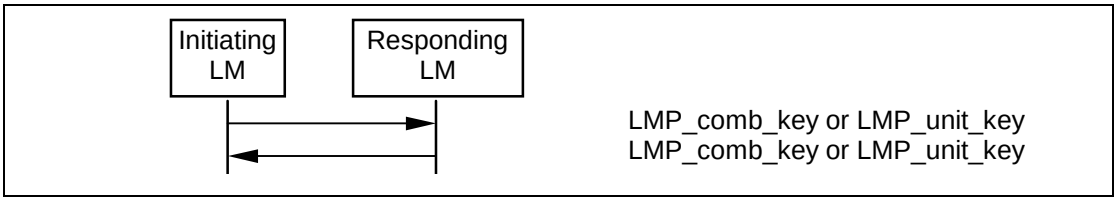

Sequence 30: Creation of the link key.

4.2.2.5 Repeated Attempts

When the authentication after creation of the link key fails because of an incorrect authentication response, the same scheme as in Section 4.2.1.3 on page 246 shall be used. This prevents an intruder from trying a large number of different PINs in a relatively short time.

4.2.3 Change Link Key

If the link key is derived from combination keys and the current link is the semi-permanent link key, the link key can be changed. If the link key is a unit key, the devices shall go through the pairing procedure in order to change the link key. The contents of the LMP_comb_key PDU is protected by a bitwise XOR with the current link key.

M/O	PDU	Contents
M	LMP_comb_key	random number

Table 4.15: Change link key PDU

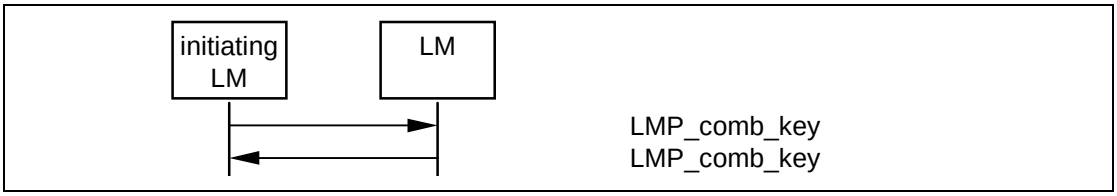

Sequence 31: Successful change of the link key

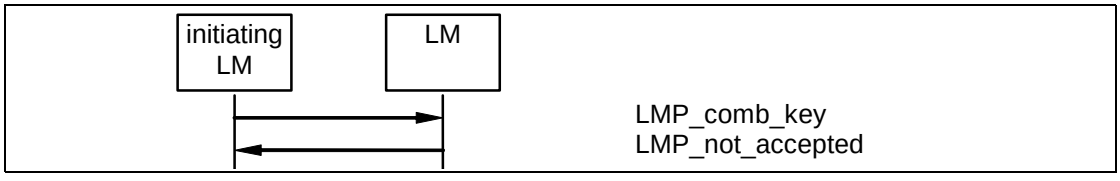

Sequence 32: Change of the link key not possible since the other device uses a unit key.

If the change of link key is successful the new link key shall be stored and the old link key shall be discarded. The new link key shall be used as link key for all the following connections between the two devices until the link key is changed again. The new link key also becomes the current link key. It will remain the

current link key until the link key is changed again, or until a temporary link key is created, see Section 4.2.4 on page 250.

When the new link key has been created mutual authentication shall be performed to confirm that the same link key has been created in both devices. After mutual authentication, if encryption is enabled, the initiating device shall pause and immediately resume encryption to produce a new encryption key. Note that this will cause a new encryption key to be generated from the ACO created during the mutual authentication process, and the random number sent in the LMP_start_encryption_req PDU which occurs in response to the resumption of encryption. The first authentication in the mutual authentication is performed with the device that initiated change link key as verifier. When finalized an authentication in the reverse direction is performed.

4.2.4 Change Current Link Key Type

The current link key can be a semi-permanent link key or a temporary link key. It may be changed temporarily, but the change shall only be valid for the current connection, see [Part H] Section 3.1 on page 925. Changing to a temporary link key is necessary if the piconet is to support encrypted broadcast. The current link key may not be changed before the connection establishment procedure has completed. This feature is only supported if broadcast encryption is supported as indicated by the LMP features mask.

M/O	PDU	Contents
O(23)	LMP_temp_rand	random number
O(23)	LMP_temp_key	key
O(23)	LMP_use_semi_permanent_key	-

Table 4.16: Change current link key PDU

4.2.4.1 Change to a Temporary Link Key

The master starts by creating the master key K_{master} as specified in Security Specification (EQ 4), on page 932. Then the master shall generate a random number, RAND, and shall send it to the slave in an LMP_temp_rand PDU. Both sides then calculate an overlay denoted OVL as OVL= E_{22}(current link key, RAND, 16). The master shall then send K_{master} protected by a modulo-2 addition with OVL to the slave in an LMP_temp_key PDU. The slave calculates K_{master}, based on OVL, that becomes the current link key. It shall be the current link key until the devices fall back to the semi-permanent link key, see Semi-permanent Link Key Becomes Current Link Key on page 251.

Note: the terminology in this section is the same as used in [Part H] Section 3.2.8 on page 932.

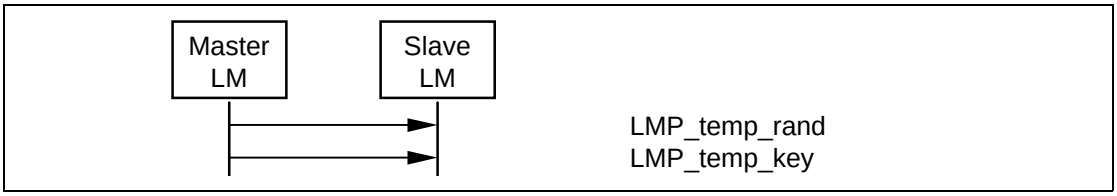

Sequence 33: Change to a temporary link key

All sequences described in Section 4.2.4.1 on page 250, including the mutual authentication after K_{master} has been created, shall form a single transaction. The transaction ID shall be set to 0.

When the devices have changed to the temporary key, a mutual authentication shall be made to confirm that the same link key has been created in both devices. The first authentication in the mutual authentication shall be performed with the master as verifier. When finalized an authentication in the reverse direction is performed.

Should the mutual authentication fail at either side, the LM of the verifier should start the detach procedure. This will allow the procedure to succeed even though one of the devices may be erroneous.

4.2.4.2 Semi-permanent Link Key Becomes Current Link Key

After the current link key has been changed to K_{master}, this change can be undone and the semi-permanent link key becomes the current link key again. If encryption is used on the link, the procedure to go back to the semi-permanent link key shall be immediately followed by the master stopping encryption using the procedure described in Section 4.2.5.4 on page 255. Encryption may be restarted by the master according to the procedures in Encryption Mode on page 252 subsection 3. This is to assure that encryption with encryption parameters known by other devices in the piconet is not used when the semi-permanent link key is the current link key.

Sequence 34: Link key changed to the semi-permanent link key

4.2.5 Encryption

If at least one authentication has been performed encryption may be used. In order for the master to use the same encryption parameters for all slaves in the piconet it shall issue a temporary key, K_{master}. The master shall make this key the current link key for all slaves in the piconet before encryption is started, see Section 4.2.4 on page 250. This is required if broadcast packets are to be encrypted.

M/O	PDU	Contents
O	LMP_encryption_mode_req	encryption mode
O	LMP_encryption_key_size_req	key size
O	LMP_start_encryption_req	random number
O	LMP_stop_encryption_req	-
O (42)	LMP_pause_encryption_req	
O (42)	LMP_resume_encryption_req	

Table 4.17: Encryption handling PDU

All sequences described in Section 4.2.5 shall form a single transaction. The transaction ID from the LMP_encryption_mode_req PDU shall be used for all start encryption and stop encryption sequences.

4.2.5.1 Encryption Mode

The master and the slave must agree upon whether to use encryption (encryption mode=1 in LMP_encryption_mode_req) or not (encryption mode=0). If the semi-permanent key is used (Key_Flag=0x00) encryption shall only apply to point-to-point packets. If the master link key is used (Key_Flag=0x01) encryption shall apply to both point-to-point packets and broadcast packets. If master and slave agree on the encryption mode, the master continues to give more detailed information about the encryption.

Devices should never send LMP_encryption_mode_req with an encryption mode value of 2 however for backwards compatibility if the LMP_encryption_mode_req is received with an encryption mode value of 2 then it should be treated the same as an encryption mode value of 1.

The initiating LM shall pause traffic on the ACL-U logical link (see Baseband Specification, Section 5.3.1, on page 105). The initiating device shall then send the LMP_encryption_mode_req PDU. If the responding device accepts the change in encryption mode then it shall complete the transmission of the current packet on the ACL logical transport and shall then suspend transmission on the ACL-U logical link. The responding device shall then send the LMP_accepted PDU.

ACL-U logical link traffic shall only be resumed after the attempt to encrypt or decrypt the logical transport is completed i.e. at the end of Sequence 31 (on failure) 34, 35, 36.

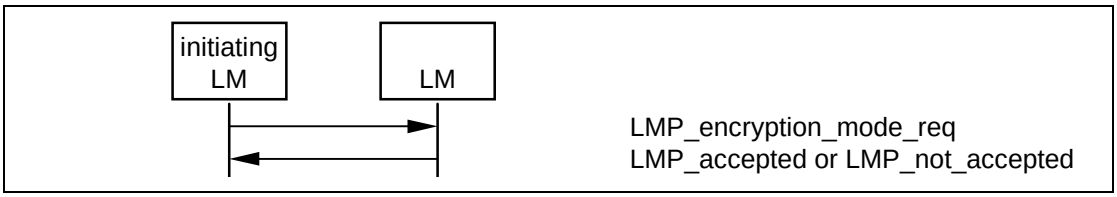

Sequence 35: Negotiation for encryption mode

After a device has sent an LMP_encryption_mode_req PDU it shall not send an LMP_au_rand PDU before encryption is started. After a device has received an LMP_encryption_mode_req PDU and sent an LMP_accepted PDU it shall not send an LMP_au_rand PDU before encryption is started. If an LMP_au_rand PDU is sent violating these rules, the claimant shall respond with an LMP_not_accepted PDU with the error code *PDU not allowed*. This assures that devices will not have different ACOs when they calculate the encryption key. If the encryption mode is not accepted or the encryption key size negotiation results in disagreement the devices may send an LMP_au_rand PDU again.

4.2.5.2 Encryption Key Size

Note: this section uses the same terms as in [Part H] Section 4.1 on page 935. The master sends an LMP_encryption_key_size_req PDU including the suggested key size $L_{sug, m}$, that is initially equal to $L_{max, m}$. If $L_{min, s} \leq L_{sug, m}$ and the slave supports $L_{sug, m}$ it shall respond with an LMP_accepted PDU and $L_{sug, m}$ shall be used as the key size. If both conditions are not fulfilled the slave sends back an LMP_encryption_key_size_req PDU including the slave's suggested key size $L_{sug, s}$. This value shall be the slave's largest supported key size that is less than $L_{sug, m}$. Then the master performs the corresponding test on the slave's suggestion. This procedure is repeated until a key size agreement is reached or it becomes clear that no such agreement can be reached. If an agreement is reached a device sends an LMP_accepted PDU and the key size in the last LMP_encryption_key_size_req PDU shall be used. After this, encryption is started; see Section 4.2.5.3 on page 254. If an agreement is not reached a device sends an LMP_not_accepted PDU with the error code *unsupported parameter value* and the devices shall not communicate using encryption.

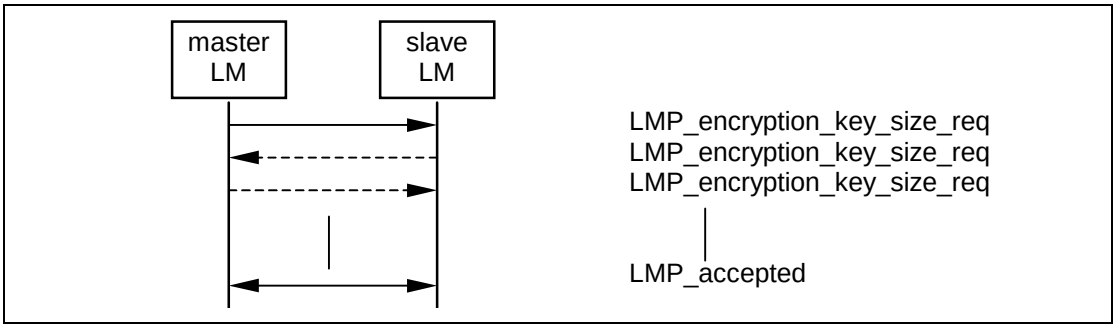

Sequence 36: Encryption key size negotiation successful

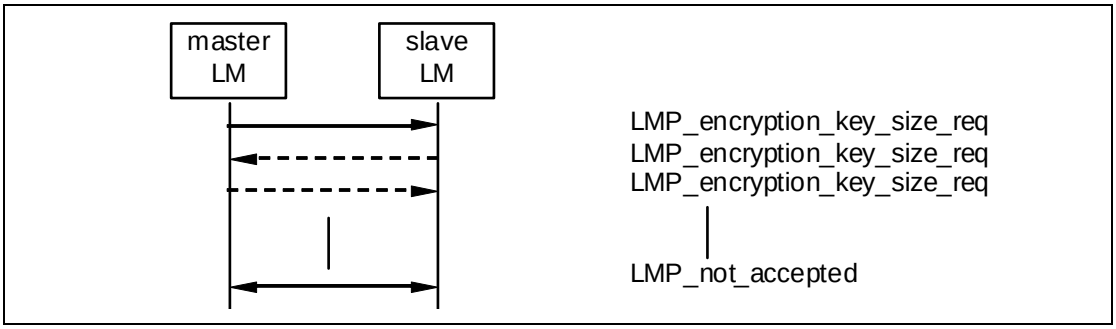

Sequence 37: Encryption key size negotiation failed

4.2.5.3 Start Encryption

To start encryption, the master issues the random number EN_RAND and calculates the encryption key. See [Part H] Section 3.2.5 on page 930. The random number shall be the same for all slaves in the piconet when broadcast encryption is used. The master then sends an LMP_start_encryption_req PDU, that includes EN_RAND. The slave shall calculate the encryption key when this message is received and shall acknowledge with an LMP_accepted PDU.

If encryption has been paused, then this sequence shall not be used.

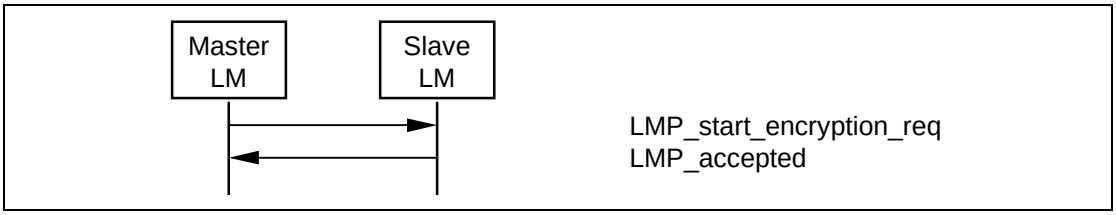

Sequence 38: Start of encryption

Starting encryption shall be performed in three steps:

1. Master is configured to transmit unencrypted packets and to receive encrypted packets.
2. Slave is configured to transmit and receive encrypted packets.
3. Master is configured to transmit and receive encrypted packets.

Between step 1 and step 2, master-to-slave transmission is possible. This is when an LMP_start_encryption_req PDU is transmitted. Step 2 is triggered when the slave receives this message. Between step 2 and step 3, slave-to-master
transmission is possible. This is when an LMP_accepted PDU is transmitted. Step 3 is triggered when the master receives this message.

4.2.5.4 Stop Encryption

To stop encryption a device shall send an LMP_encryption_mode_req PDU with the parameter encryption mode equal to 0 (no encryption). The other device responds with an LMP_accepted PDU or an LMP_not_accepted PDU (the procedure is described in Sequence 35 in Encryption Mode on page 252). If accepted, encryption shall be stopped by the master sending an LMP_stop_encryption_req PDU and the slave shall respond with an LMP_accepted PDU according to Sequence 39.

If encryption has been paused, then this sequence shall not be used.

Sequence 39: Stop of encryption

Stopping encryption shall be performed in three steps, similar to the procedure for starting encryption.

1. Master is configured to transmit encrypted packets and to receive unencrypted packets.
2. Slave is configured to transmit and receive unencrypted packets.
3. Master is configured to transmit and receive unencrypted packets.

Between step 1 and step 2 master to slave transmission is possible. This is when an LMP_stop_encryption_req PDU is transmitted. Step 2 is triggered when the slave receives this message. Between step 2 and step 3 slave to master transmission is possible. This is when an LMP_accepted PDU is transmitted. Step 3 is triggered when the master receives this message.

4.2.5.5 Pause Encryption

To pause encryption without disabling encryption, a device shall finalize the transmission of the current ACL-U data packet and then send an LMP_pause_encryption_req PDU (with the transaction ID set to the role of the device at the time the LMP_pause_encryption_req PDU is sent).

If the responding device is a master, then the master device shall finalize the transmission of the current ACL-U data packet and then respond with an LMP_stop_encryption_req PDU to the slave.

If the responding device is a slave, then the slave device shall finalize the transmission of the current ACL-U data packet and then respond with an LMP_pause_encryption_req PDU. The master device shall respond to the LMP_pause_encryption_req PDU with an LMP_stop_encryption_req PDU to the slave.

When the slave receives the LMP_stop_encryption_req PDU it shall respond with an LMP_accepted PDU.

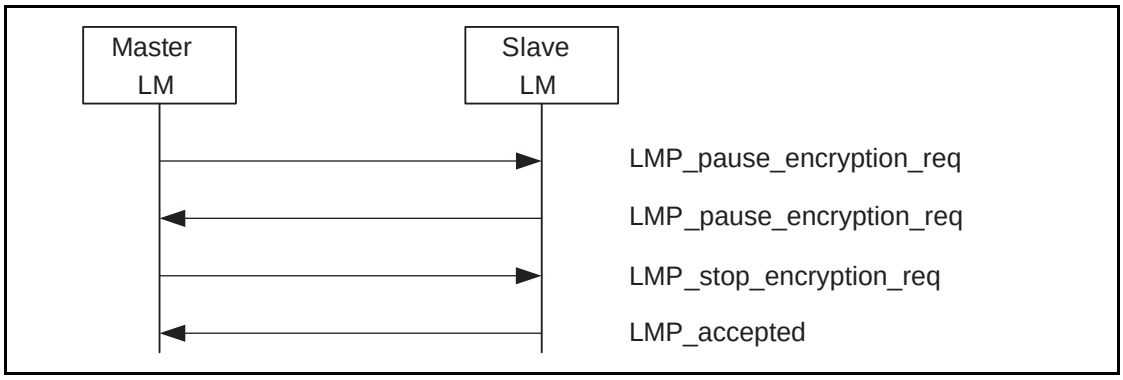

Sequence 40: Master-initiated pausing of encryption

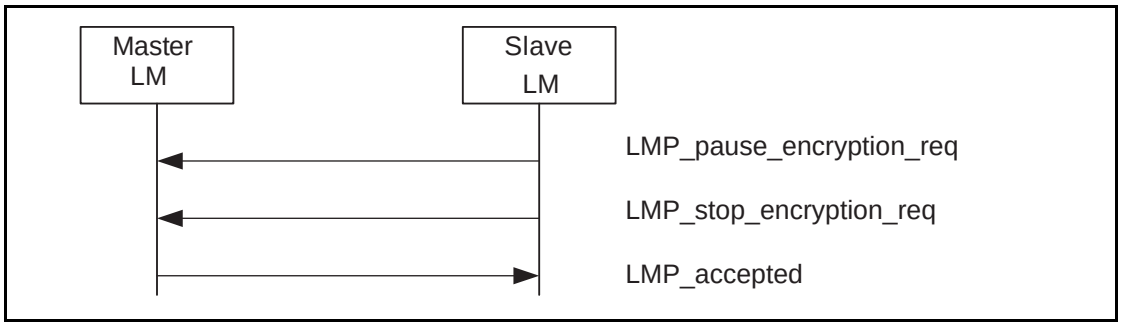

Sequence 41: Slave-initiated pausing of encryption

The LMP_pause_encryption_req PDU and LMP_stop_encryption_req PDU shall be rejected only when transaction collision needs to be resolved.

Pausing encryption shall be performed in three steps, similar to the procedure for stopping encryption.

1. Master is configured to transmit encrypted packets and to receive unencrypted packets.
2. Slave is configured to transmit and receive unencrypted packets.
3. Master is configured to transmit and receive unencrypted packets.

Between step 1 and step 2 master-to-slave transmission is possible. This is when the LMP_stop_encryption_req PDU is transmitted from the master to the

slave. Step 2 is triggered when the slave receives this message. Between step 2 and step 3 slave-to-master transmission is possible. This is when an LMP_accepted PDU is transmitted. Step 3 is triggered when the master receives this message.

Note: A device can only restart ACL-U data traffic by resuming encryption using the procedures in Section 4.2.5.6.

4.2.5.6 Resume Encryption

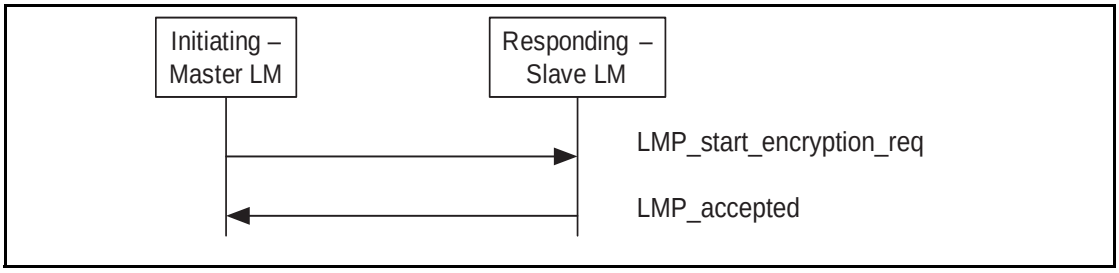

Sequence 42: Initiating Master LM resumes encryption

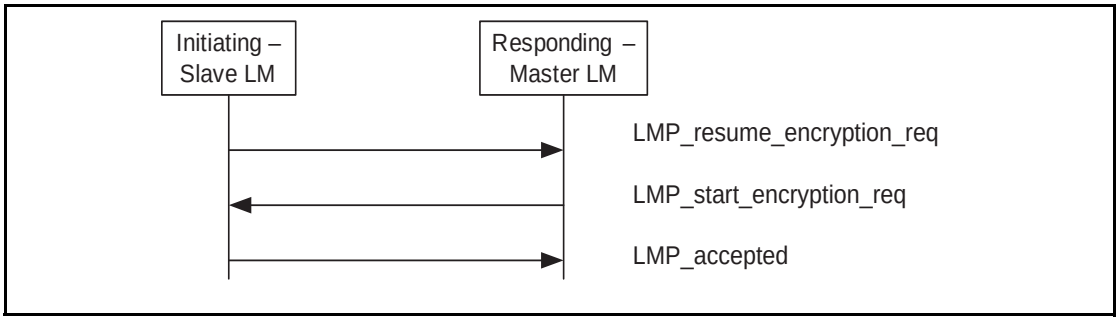

Sequence 43: Initiating Slave LM resumes encryption

If the responding device is a slave, then the slave shall calculate the encryption key and respond with an LMP_accepted PDU.

If the responding device is a master, then the master shall respond with an LMP_start_encryption_req PDU. The slave, upon receiving the LMP_start_encryption_req PDU from the master, shall calculate the encryption key and respond with an LMP_accepted PDU.

The LMP_resume_encryption_req PDU and the LMP_start_encryption_req PDU shall not be rejected.

Resuming encryption shall be performed in three steps, similar to the procedure for starting encryption:

1. Master is configured to transmit unencrypted packets and to receive encrypted packets.
2. Slave is configured to transmit and receive encrypted packets.
3. Master is configured to transmit and receive encrypted packets.

Between step 1 and step 2, master-to-slave transmission is possible. This is when the LMP_start_encryption_req PDU is transmitted from the master. Step 2 is triggered when the slave receives this message. Between step 2 and step 3, slave-to-master transmission is possible. This is when an LMP_accepted PDU is transmitted. Step 3 is triggered when the master receives this message.

Note: For a slave initiated starting of encryption, step 1 is not started when the master has received the LMP_resume_encryption_req PDU from the slave, but when the master sends the LMP_start_encryption_req PDU.

4.2.5.7 Change Encryption Mode, Key or Random Number

If the encryption key or encryption random number need to be changed or if the current link key needs to be changed according to the procedures in Section 4.2.4 on page 250, encryption shall be paused and resumed after completion, using the procedures in Section 4.2.5 on page 252, Section 4.2.5.1 and Section 4.2.5.2, and Section 4.2.3 on page 249 for the new parameters to be valid. If the Pause Encryption feature is not supported by both devices, encryption shall be stopped and re-started after completion, using the procedures in Section 4.2.5 on page 252, subsections 3-4 for the new parameters to be valid.

4.2.5.8 Encryption Key Refresh

The Link Manager shall refresh the encryption key within 2^{28} ticks of the Bluetooth clock from the previous start or resume of encryption. To refresh the encryption key, the Link Manager shall Pause encryption using the procedure in Section 4.2.5.5 on page 255 and immediately Resume encryption using the procedure in Section 4.2.5.6 on page 257.

4.2.6 Request Supported Encryption Key Size

When broadcast encryption is supported via the LMP features mask, it is possible for the master to request a slave's supported encryption key sizes.

M/O	PDU	Contents
O(23)	LMP_encryption_key_size_mask_req	
O(23)	LMP_encryption_key_size_mask_res	key size mask

Table 4.18: Encryption key size request PDU

The master shall send an LMP_encryption_key_mask_req PDUto the slave to obtain the slaves supported encryption key sizes.

The slave shall return a bit mask indicating all broadcast encryption key sizes supported. The least significant bit shall indicate support for a key size of 1, the next most significant bit shall indicate support for a key size of 2 and so on up to a key size of 16. In all cases a bit set to 1 shall indicate support for a key size; a bit set to 0 shall indicate that the key size is not supported.

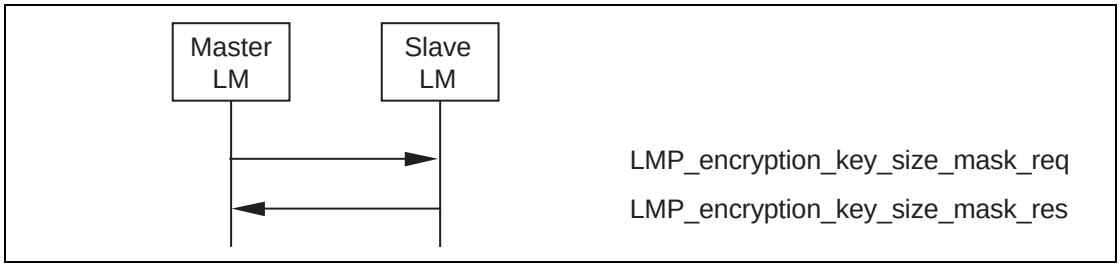

Sequence 44: Request for supported encryption key sizes.

4.2.7 Secure Simple Pairing

There are four stages defined in the Secure Simple Pairing LM process:

- IO capabilities exchange
- Public key exchange
- Authentication stage 1
- Authentication stage 2

The devices shall first exchange the IO capabilities to determine the proper algorithm to be used. Three algorithms have been specified: Numeric comparison, Passkey entry, Out of band.

In following sections, the device requesting the IO capabilities is referred to as the "Initiating LM" or "Initiator". The other device is referred to as the "LM" or "Responder". This designation remains throughout the entire Secure Simple Pairing procedure.

Note that the host shall enable Secure Simple Pairing before the LMP Secure Simple Pairing procedures start.

M/O	PDU	Contents
O(51)	LMP_io_capability_req	IO_capabilities, OOB_Authentication_Data, Authentication_Requirements
O(51)	LMP_io_capability_res	IO_capabilities, OOB_Authentication_Data, Authentication_Requirements
O(51)	LMP_Simple_Pairing_Confirm	Commitment Value
O(51)	LMP_Simple_Pairing_Number	Nonce Value
O(51)	LMP_Dhkey_check	Confirmation value
O(51)	LMP_Numeric_Comparison_Failed	-
O(51)	LMP_OOB_Failed	-
O(51)	LMP_keypress_notification	Notification Type
O(51)	LMP_Passkey_Entry_Failed	-

4.2.7.1 IO Capability Exchange

The Link Managers shall use the local and remote IO capabilities to determine which authentication method shall be used.

If Simple_Pairing_Mode is set to enabled, the Initiator shall request the IO capabilities from the Host. The initiator shall send an LMP_io_capability_req PDU to the Responder. If Simple_Pairing_Mode is set to enabled on the responding device, it shall reply with an LMP_io_capability_res PDU containing its IO capabilities description.

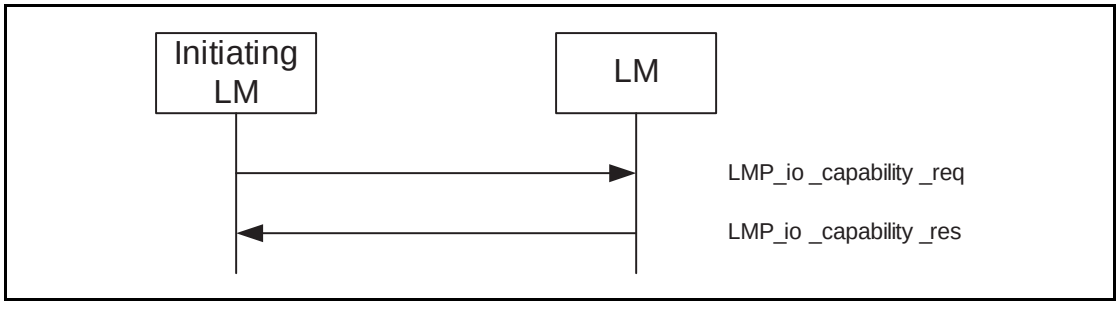

Sequence 45: IO Capability Exchange

4.2.7.1.1 IO Capability Exchange Transaction Collision and Resolution

If both Link Managers attempt to become the initiator of the IO capability exchange, the master Link Manager shall send an LMP_not_accepted_ext

PDU with error code 'Transaction Collision'. The slave Link Manager shall respond with the LMP_io_capability_res PDU.

The master LM shall remain the initiating LM for the remainder of the Secure Simple Pairing sequences.

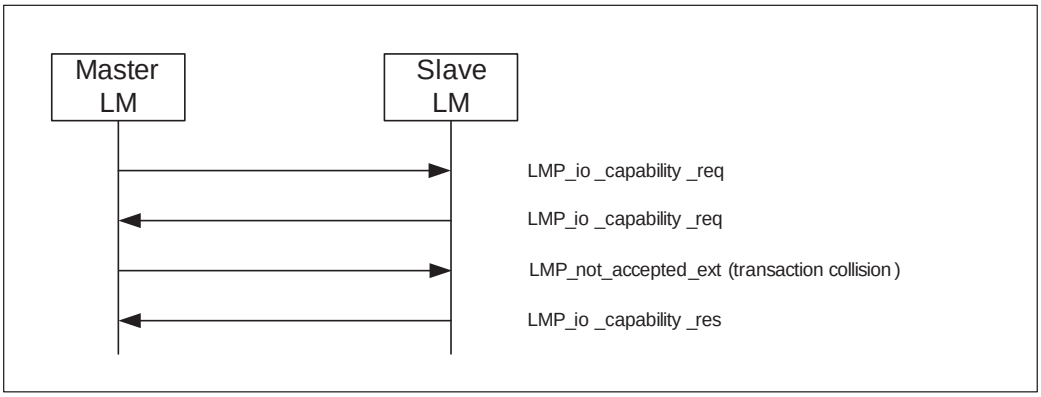

Sequence 46: IO Capability exchange with transaction Collision (master transmitting LMP_io_capability_req first) and resolution

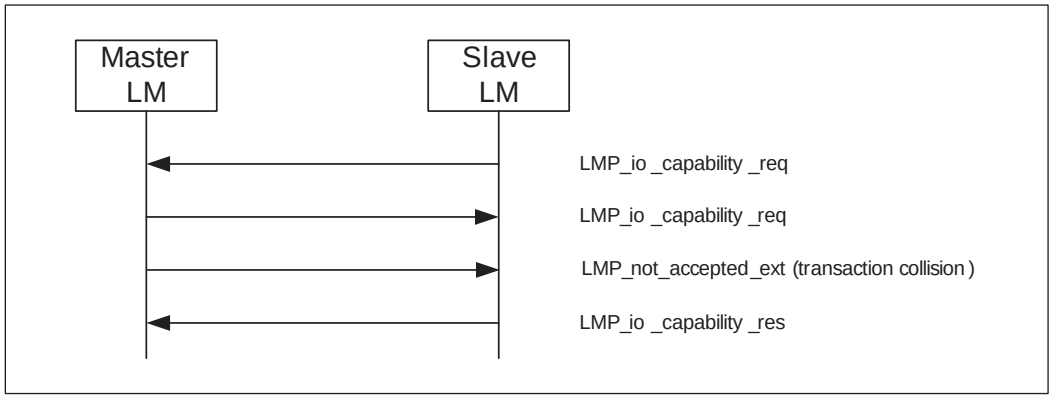

Sequence 47: IO Capability exchange with transaction Collision (slave transmitting LMP_io_capability_req first) and resolution

4.2.7.2 Public Key Exchange

Once the IO capabilities are exchanged, public keys shall be exchanged between the two devices.

Since the public key size is 48 bytes long, the exchange shall be done using the LMP LMP_encapsulated_header and LMP_encapsulated_payload PDUs as defined in Section 4.1.12.

The Initiator shall first send its public key, and the Responder shall reply with its public key.

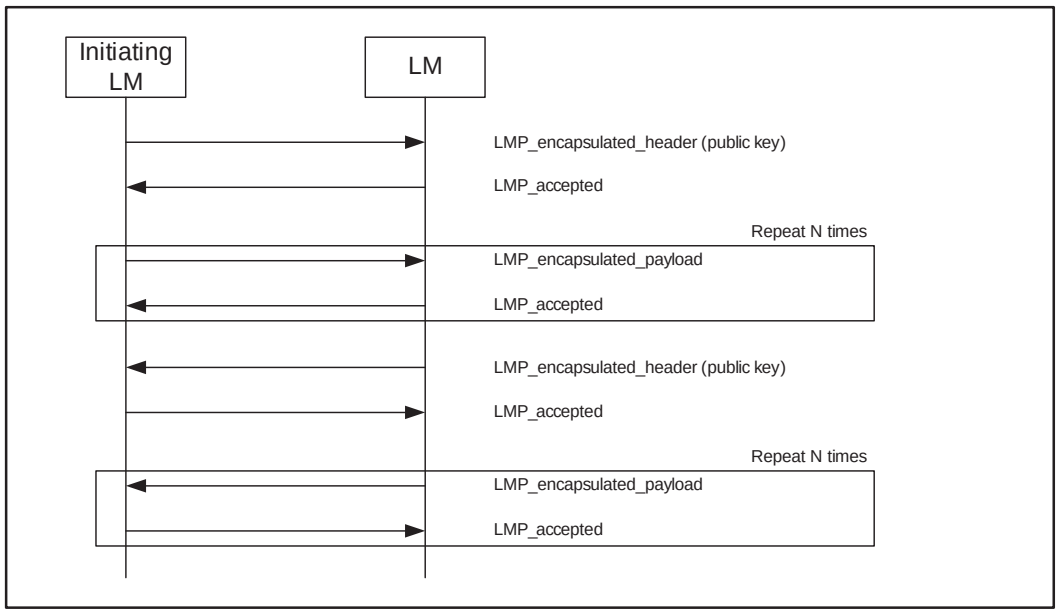

Sequence 48: Public key exchange

A public key shall be considered as received when the last LMP_encapsulated_payload has been received and the associated LMP_accepted PDU has been sent.

The device can then start computing its Diffie Hellman Key.

4.2.7.3 Authentication Stage 1

One of the following procedures shall be used in Authentication Stage 1:

- If one or both devices have the OOB Authentication Data parameter set to Received, the Out-of-Band procedure shall be used.
- If both devices have the Authentication_Requirements parameter set to one of the man-in-the middle (MITM) Protection Not Required options, the Numeric Comparison procedure shall be used.
- If one or both devices have the Authentication_Requirements parameter set to one of the MITM Protection Required options, the Passkey Entry procedure shall be used if the either the local or remote IO Capability is set to KeyboardOnly and the other IO capability is not set to NoInputNoOutput. Otherwise, the Numeric Comparison authentication procedure shall be used.

4.2.7.3.1 Authentication Stage 1: Numeric Comparison

Once public keys have been exchanged, both devices shall generate a random number.

The Responder shall compute its commitment as defined in Section 7.7.1 on page 964, and shall send this value to the Initiator by using LMP_simple_pairing_confirm PDU.

The Initiator shall then send an LMP_simple_pairing_number PDU with its generated random number. The Responder shall acknowledge by sending an LMP_accepted PDU.

The Responder shall then send an LMP_simple_pairing_number containing its own generated random number. Upon reception, the Initiator shall calculate the commitment as defined in Section 7.7.1 on page 964 and compare it to the one received previously with the LMP_simple_pairing_confirm PDU. If both values are equal, the Initiator shall respond with an LMP_accepted PDU.

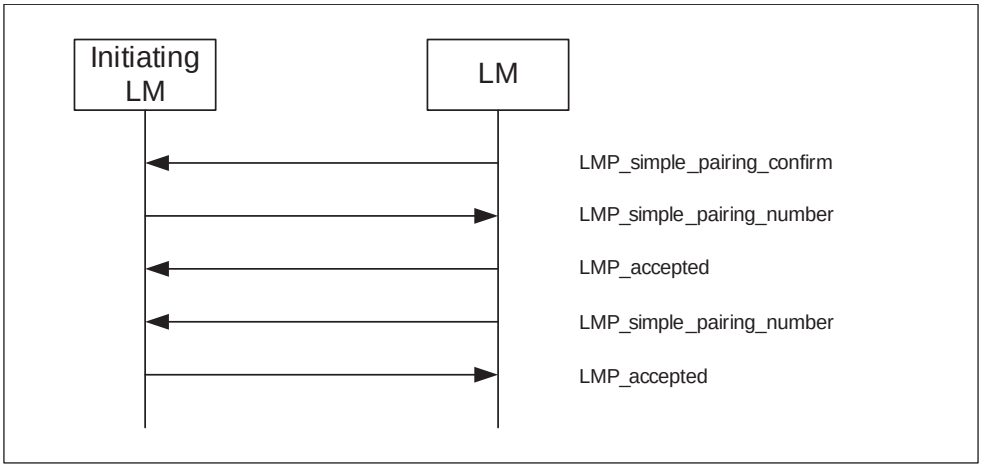

Sequence 49: Numeric Comparison Authentication: Commitment check success

4.2.7.3.1.1 Commitment Check Failure

If the calculated commitment by the Initiator is not equal to the received commitment, the Initiator shall abort the Secure Simple Pairing process by sending an LMP_not_accepted PDU with reason "Authentication Failure."

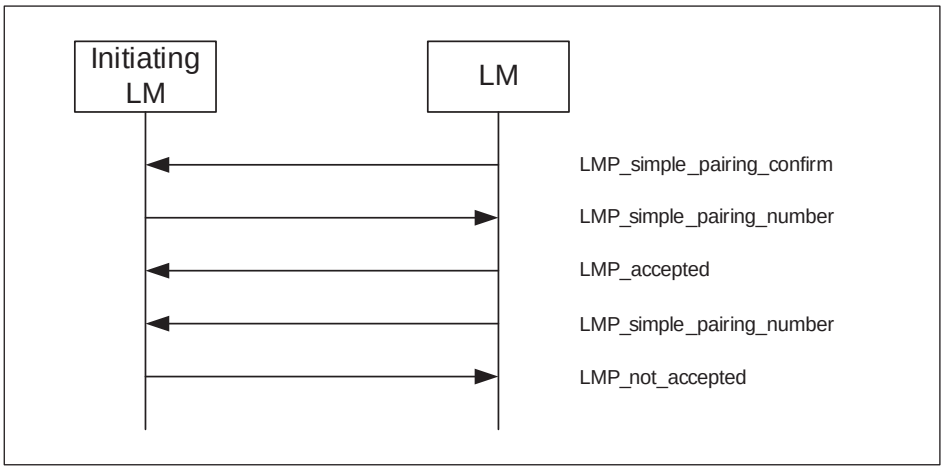

Sequence 50: Numeric Comparison Authentication: Commitment check failure

4.2.7.3.1.2 Numeric Comparison Failure on Initiator Side

If the user on the initiating side indicates that the confirm values do not match (as indicated by the HCI_User_Confirmation_Negative_Reply command) the initiating LM shall send an LMP_numeric_comparison_failure PDU.

Secure Simple Pairing process shall then be aborted. The Link Managers shall not disconnect the connection.

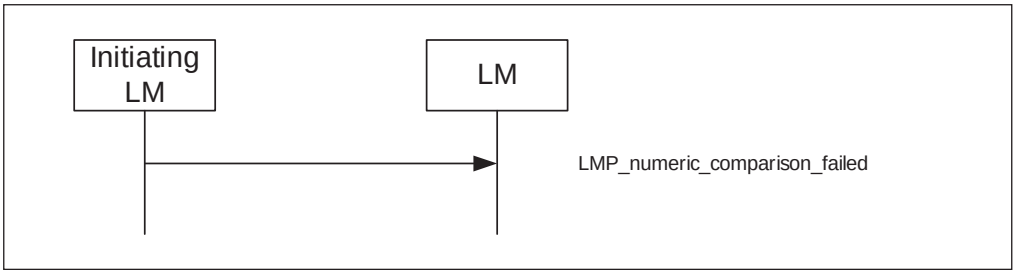

Sequence 51: Authentication stage 1 Numeric Comparison Failure on Initiator Side

4.2.7.3.1.3 Numeric Comparison failure on Responder Side

If the user on the responding side indicates that the confirm values do not match (as indicated by the HCI_User_Confirmation_Negative_Reply command) the responding LM shall send an LMP_not_accepted PDU in response to the LMP_dhkey_check PDU.

Simple Pairing process shall then be aborted. The Link Managers shall not disconnect the connection.

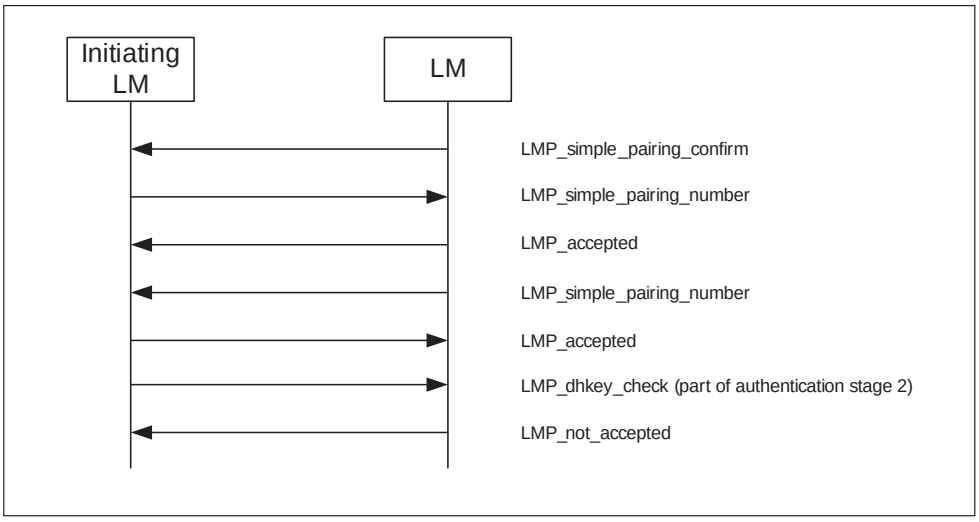

Sequence 52: Authentication stage 1: Numeric Comparison Failure on Responder Side

4.2.7.3.2 Authentication Stage 1: Passkey Entry Authentication

The initiating LM shall start the following procedure after receiving the Passkey Reply from the host. This procedure shall be repeated 20 times:

1. The Initiator and the Responder shall generate a new random number.
2. The Initiator and the Responder shall calculate the local commitment value using the exchanged public keys, the local random number, and the passkey from the local Host, according to Section 7.7.1 on page 964.
3. The Initiator shall send an LMP_simple_pairing_confirm PDU with the commitment it calculated in step 2.
4. The Responder shall respond with an LMP_simple_pairing_confirm PDU with the commitment it calculated in step 2.
5. The Initiator shall then send an LMP_simple_pairing_number PDU with the random number it generated in step 1.
6. The Responder shall then calculate commitment from the exchanged public keys, the random number it received and the passkey from the local Host, according to Section 7.7.1 on page 964. If the calculated commitment and the received commitment are equal, the Responder shall reply with an LMP_accepted PDU.
7. The Responder shall then send an LMP_simple_pairing_number PDU with the random value it generated in step 1.
8. The Initiator shall calculate the commitment using exchanged public keys, the received the random number it received and the passkey from the local Host, according to Section 7.7.1 on page 964. If the calculated commitment is equal to the received commitment, the Initiator shall reply with an LMP_accepted PDU.

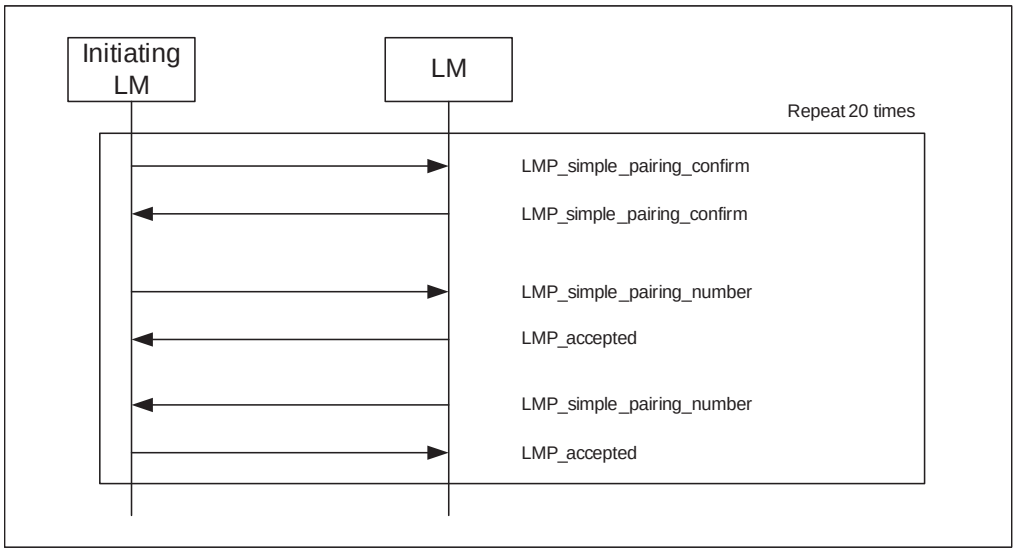

Sequence 53: Authentication Passkey entry

When this procedure has successfully passed 20 times, the Secure Simple Pairing process continues with the Authentication step 2 as described in Authentication stage 2: DHKey Check on page 271.

4.2.7.3.2.1 Commitment Check Failure on the Responder side

If during one of the 20 repetitions, the commitment calculated by the Responder is not equal to the one received from the Initiator (step 6), the Responder shall abort the Secure Simple Pairing process by sending an LMP_not_accepted PDU with reason "Authentication Failure."

Secure Simple Pairing procedures shall then be aborted. The Link Managers shall not disconnect the connection.

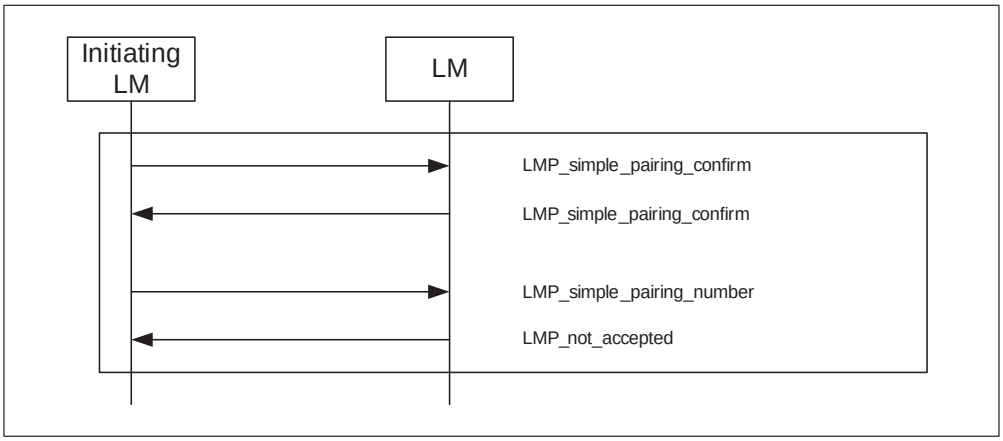

Sequence 54: Authentication Passkey Entry: Commitment check failure on the Responder side

4.2.7.3.2.2 Commitment check failure on the Initiator side

If during one of the 20 repetitions, the commitment calculated by the Initiator is not equal to the one received from the Responder (step 8), the Initiator shall abort the Secure Simple Pairing process by sending an LMP_not_accepted PDU with reason "Authentication Failure".

Secure Simple Pairing procedures shall then be aborted. The Link Managers shall not disconnect the connection.

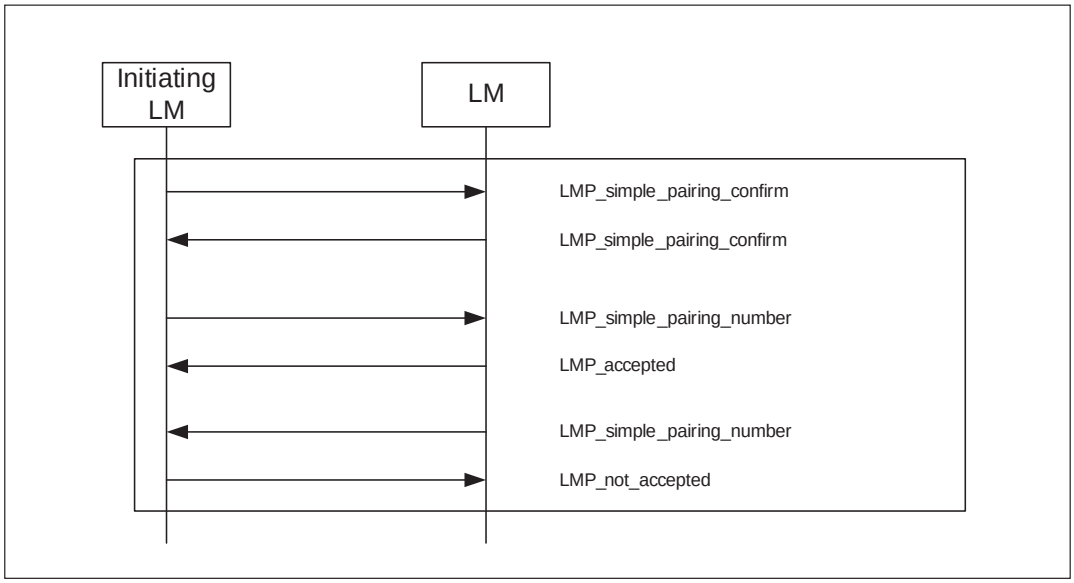

Sequence 55: Authentication Passkey Entry: Commitment check failure on the Initiator side

4.2.7.3.2.3 Passkey Entry Failure on Initiator Side

If the initiating side indicates that the passkey was not entered or canceled (as indicated by the HCI_Passkey_Request_Negative_Reply command) the initiating LM shall send an LMP_passkey_entry_failed PDU.

Secure Simple Pairing process shall then be aborted. The Link Managers shall not disconnect the connection.

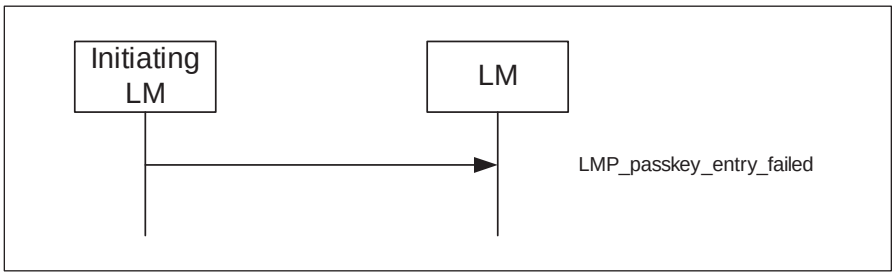

Sequence 56: Authentication stage 1 Passkey Entry Failure on Initiator Side

4.2.7.3.3 Passkey Entry Failure on Responding side

If the responding side indicates that the passkey was not entered or canceled (as indicated by the HCI_Passkey_Request_Negative_Reply command), the responding LM shall send an LMP_not_accepted PDU in response to the LMP_simple_pairing_config PDU.

Simple Pairing process shall then be aborted. The Link Managers shall not disconnect the connection.

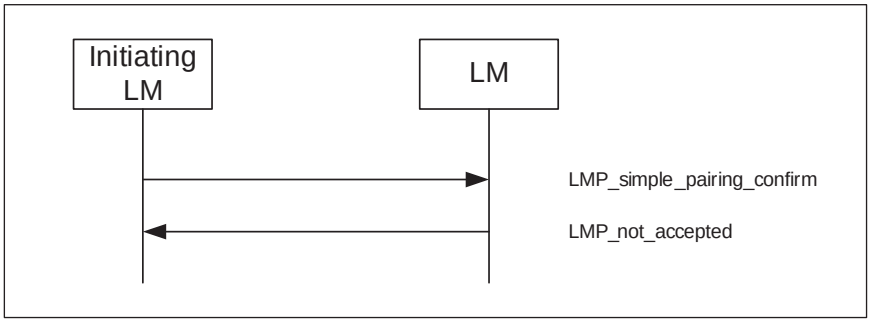

Sequence 57: Authentication Stage 1 Passkey Entry Failure on Responding Side

4.2.7.3.4 Keypress Notifications

A Controller that allows the Host to change its IO capabilities shall send notifications on key presses to the remote side using the LMP_keypress_notification PDU when the Host sets the IO capabilities to KeyboardOnly IO and when Secure Simple Pairing is supported on the Host and Controller.

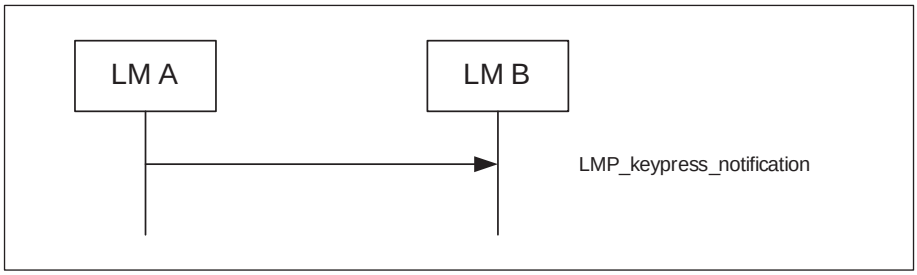

Sequence 58: Keypress Notifications

4.2.7.3.5 Authentication Stage 1: OOB

Upon reception of the OOB information (as defined in “Authentication Stage 1: Out of Band Protocol” on page 958 in Vol. 2) from the host, the devices shall compare the received commitment from its host, with the one calculated using the secret number received from the Host and the public key received from the remote device. If the local Host has not set the OOB Authentication Data Present, the LM shall set the remote secret number to zero and base the subsequent calculations on this value.

If the commitment check on the initiator is valid, the Initiator shall then generate a random number (nonce) and send it to the Responder using an LMP_simple_pairing_number PDU. If the commitment succeeds, the Responder shall acknowledge by sending an LMP_accepted PDU otherwise it shall send an LMP_not_accepted PDU. The Responder shall then generate a random number (nonce) and send it to the Initiator using an LMP_simple_pairing_number PDU. If the commitment succeeds, the Initiator shall acknowledge by sending an LMP_accepted PDU otherwise it shall send an LMP_not_accepted PDU.

If the commitment values don't match in the Initiator, the procedure in Section 4.2.7.3.5.2, “Commitment Check Failure on the Initiator Side,” on page 270 shall apply.

If the commitment values don't match in the Responder, the procedure in Section 4.2.7.3.5.1, “Commitment Check Failure on the Responder Side,” on page 269 shall apply.

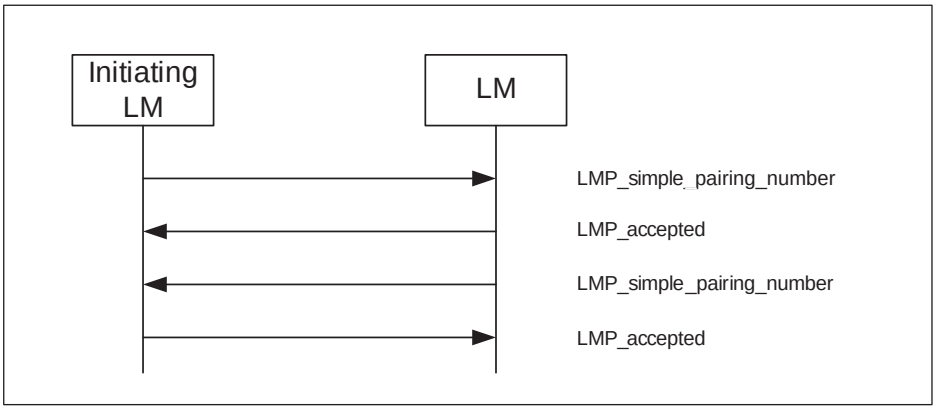

Sequence 59: Authentication OOB: Only one device is OOB-r capable

When these operations have been passed successfully, Secure Simple Pairing procedures continue with Authentication step 2 as described in Authentication stage 2: DHKey Check on page 271.

4.2.7.3.5.1 Commitment Check Failure on the Responder Side

If the commitment received OOB from the host is not equal to the calculated commitment, the Responder shall send an LMP_not_accepted PDU with reason "Authentication Failure" in response to LMP_simple_pairing_number PDU.

Secure Simple Pairing process shall then be aborted. The Link Managers shall not disconnect the connection.

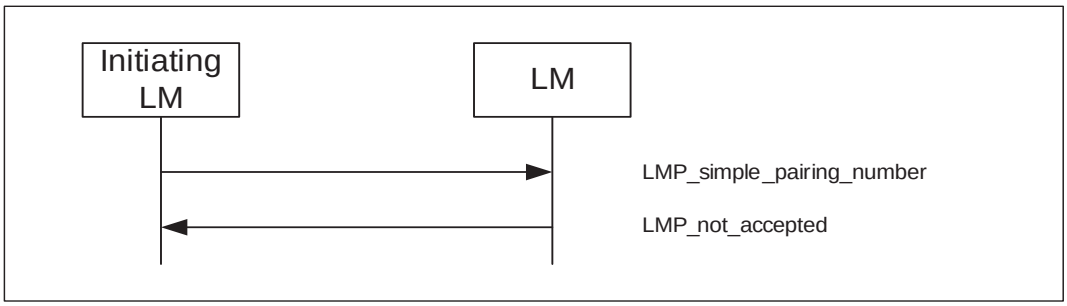

Sequence 60: Authentication stage 1 OOB: Commitment check failure on the Responder side

4.2.7.3.5.2 Commitment Check Failure on the Initiator Side

If the commitment received OOB from the host is not equal to the calculated commitment, the Initiator shall send an LMP_not_accepted PDU with reason "Authentication Failure" in response to LMP_simple_pairing_number PDU.

Secure Simple Pairing process shall then be aborted. The Link Managers shall not disconnect the connection.

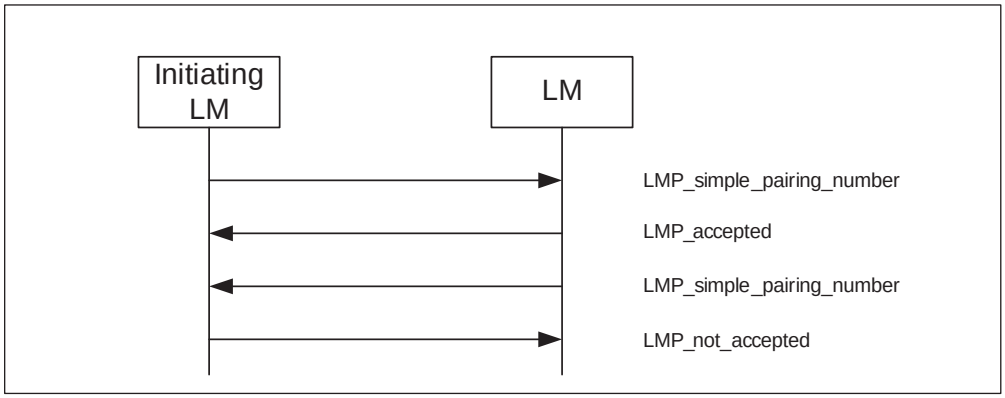

Sequence 61: Authentication stage 1 OOB: Commitment check failure on the Initiator side

4.2.7.3.6 Out-of-Band Information not Available on the Initiator Side

If the Host on the initiating side does not have out-of-band information the Initiator shall send an LMP_oob_failed PDU.

Simple Pairing process shall then be aborted. The Link Managers shall not disconnect the connection.

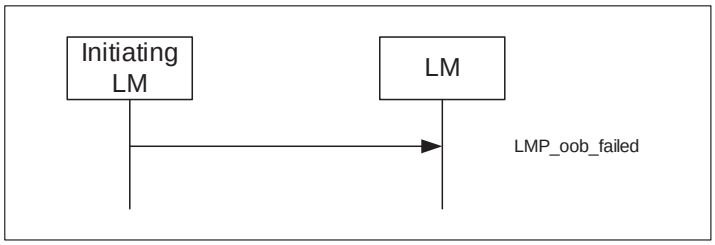

Sequence 62: Authentication stage 1 OOB: OOB information not available on the Initiator side

4.2.7.4 Authentication stage 2: DHKey Check

At this stage, both devices compute a new confirmation values based on Diffie-Hellman key and previously exchanged information according to Section 7.7.4, “The Simple Pairing Check Function f3,” on page 967.

The Initiator shall send an LMP_DHKey_check PDU to the Responder including the confirmation value it has computed. Upon reception, the Responder shall reply with an LMP_accepted PDU if the received value is equal to the one it has calculated according to Section 7.7.4 on page 967. If it fails, refer to Section 4.2.7.3.5.1 on page 269.

The Responder shall then send an LMP_DHKey_check PDU to the Initiator including its confirmation value it has computed. Upon reception, the Initiator shall reply with an LMP_accepted PDU if the received value is equal to the one it has calculated according to Section 7.7.4 on page 967. If it fails, refer to Section 4.2.7.4.1.1, “Check Failure on the Initiator Side,” on page 272.

At this point, both devices shall compute the link key according to Section 7.7.3, “The Simple Pairing Key Derivation Function f2,” on page 966.

The Initiator shall then start standard mutual authentication as described in Section 4.2.1.1

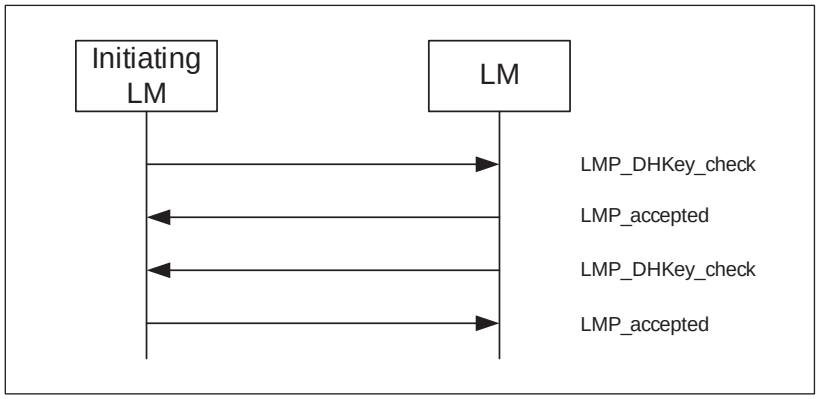

Sequence 63: DHKey check

4.2.7.4.1 Check Failure on the Responder Side

If the confirmation value received via LMP by the Responder is not equal to the one it has calculated according to Section 7.7.4 on page 967, the Responder shall send an LMP_not_accepted PDU with reason "Authentication Failure".

Secure Simple Pairing procedures shall then be aborted. The Link Managers shall not disconnect the connection.

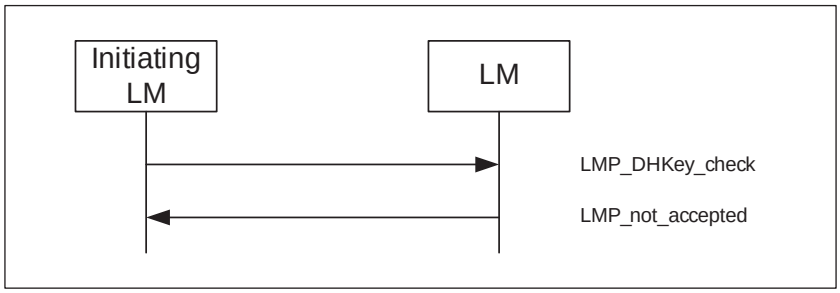

Sequence 64: DHKey check: Check failure on the Responder side DHKey check: Check failure on the Responder

4.2.7.4.1.1 Check Failure on the Initiator Side

If the confirmation value received via LMP by the Initiator is not equal to the one it has calculated according to Section 7.7.4 on page 967, the Initiator shall send an LMP_not_accepted PDU with reason "Authentication Failure".

Secure Simple Pairing procedures shall then be aborted. The Link Managers shall not disconnect the connection.

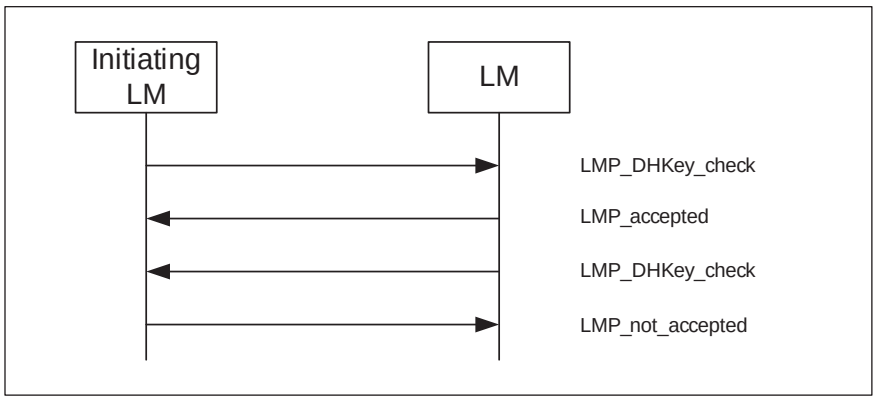

Sequence 65: DHKey check: check failure on the Initiator side

4.3 INFORMATIONAL REQUESTS

4.3.1 Timing Accuracy

LMP supports requests for the timing accuracy. This information can be used to minimize the scan window during piconet physical channel re-synchronization

(see Baseband Specification, Section 2.2.5.2, on page 73). The timing accuracy parameters returned are the long term drift measured in ppm and the long term jitter measured in μs of the worst case clock used. These parameters are fixed for a certain device and shall be identical when requested several times. Otherwise, the requesting device shall assume worst case values (drift=250ppm and jitter=10μs).

M/O	PDU	Contents
O(4)	LMP_timing_accuracy_req	-
O(4)	LMP_timing_accuracy_res	drift jitter

Table 4.19: Request limited timing PDU

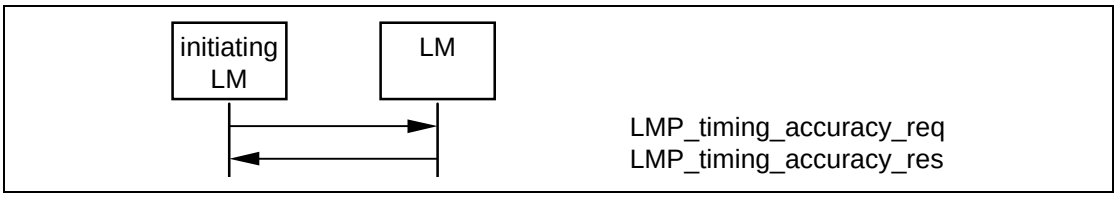

Sequence 66: The requested device supports timing accuracy information.

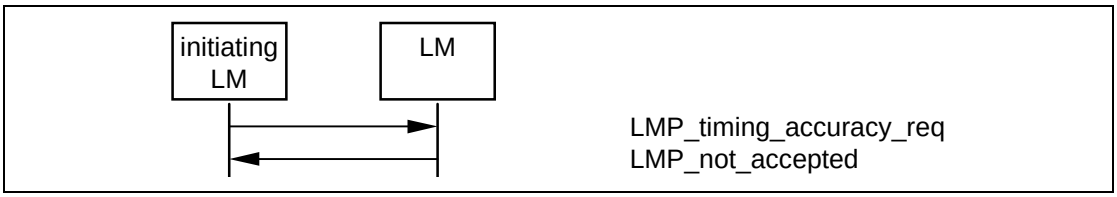

Sequence 67: The requested device does not support timing accuracy information.

4.3.2 Clock Offset

The clock offset can be used to speed up the paging time the next time the same device is paged. The master can request the clock offset at anytime following a successful baseband paging procedure (i.e., before, during or after connection setup). The clock offset shall be defined by the following equation:

$(CLKN_{16\text{-}2\ slave} - CLKN_{16\text{-}2\ master})$ mod 2**15.

M/O	PDU	Contents
M	LMP_clkoffset_req	-
M	LMP_clkoffset_res	clock offset

Table 4.20: PDUs used for clock offset request.

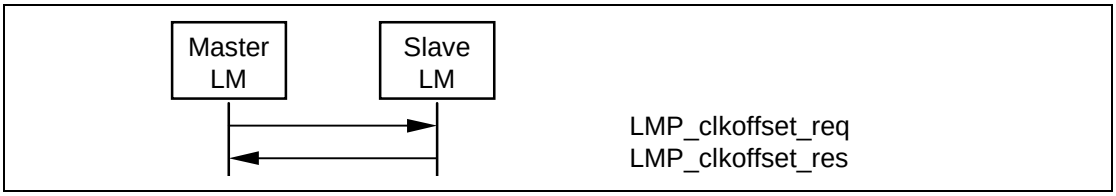

Sequence 68: Clock offset requested.

4.3.3 LMP version

LMP supports requests for the version of the LM protocol. The LMP_version_req and LMP_version_res PDUs contain three parameters: VersNr, CompId and SubVersNr. VersNr specifies the version of the Bluetooth LMP specification that the device supports. CompId is used to track possible problems with the lower Bluetooth layers. All companies that create a unique implementation of the LM shall have their own CompId. The same company is also responsible for the administration and maintenance of the SubVersNr. It is recommended that each company has a unique SubVersNr for each RF/BB/LM implementation. For a given VersNr and CompId, the values of the SubVersNr shall increase each time a new implementation is released. For both CompId and SubVersNr the value 0xFFFF means that no valid number applies. There is no ability to negotiate the version of the LMP. The sequence below is only used to exchange the parameters. LMP version can be requested at anytime following a successful baseband paging procedure.

M/O	PDU	Contents
M	LMP_version_req	VersNr CompId SubVersNr
M	LMP_version_res	VersNr CompId SubVersNr

Table 4.21: PDUs used for LMP version request.

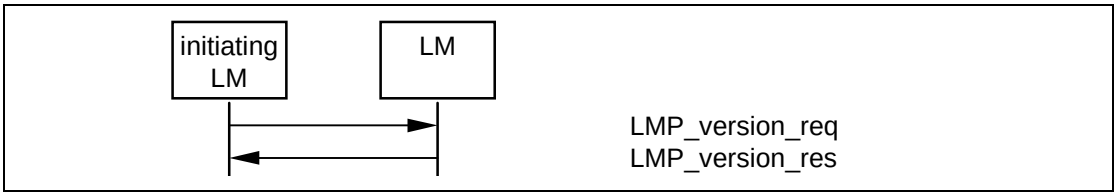

Sequence 69: Request for LMP version.

4.3.4 Supported Features

The supported features may be requested at anytime following a successful baseband paging procedure by sending the LMP_features_req PDU. Upon reception of an LMP_features_req PDU, the receiving device shall return an LMP_features_res PDU.

The number of features bits required will in the future exceed the size of a single page of features. An extended features mask is therefore provided to allow support for more than 64 features. Support for the extended features mask is indicated by the presence of the appropriate bit in the LMP features mask. The LMP_features_req_ext and LMP_features_res_ext PDUs operate in precisely the same way as the LMP_features_req and LMP_features_res PDUs except that they allow the various pages of the extended features mask to be requested. The LMP_features_req_ext may be sent at any time following the exchange of the LMP_features_req and LMP_features_rsp PDUs.

The LMP_features_req_ext PDU contains a feature page index that specifies which page is requested and the contents of that page for the requesting device. Pages are numbered from 0-255 with page 0 corresponding to the normal features mask. Each page consists of 64 bits. If a device does not support any page number it shall return a mask with every bit set to 0. It also contains the maximum features page number containing any non-zero bit for this device. The recipient of an LMP_features_req_ext PDU shall respond with an LMP_features_res_ext PDU containing the same page number and the appropriate features page along with its own maximum features page number.

If the extended features request is not supported then all bits in all extended features pages for that device shall be assumed to be zero.

M/O	PDU	Contents
M	LMP_features_req	features
M	LMP_features_res	features
O(63)	LMP_features_req_ext	features page max supported page extended features
O(63)	LMP_features_res_ext	features page max supported page extended features

Table 4.22: PDUs used for features request.

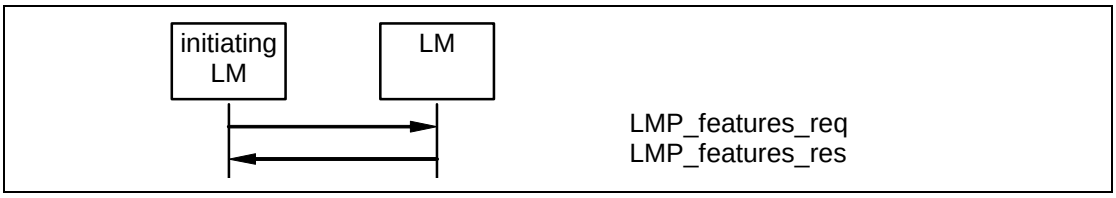

Sequence 70: Request for supported features.

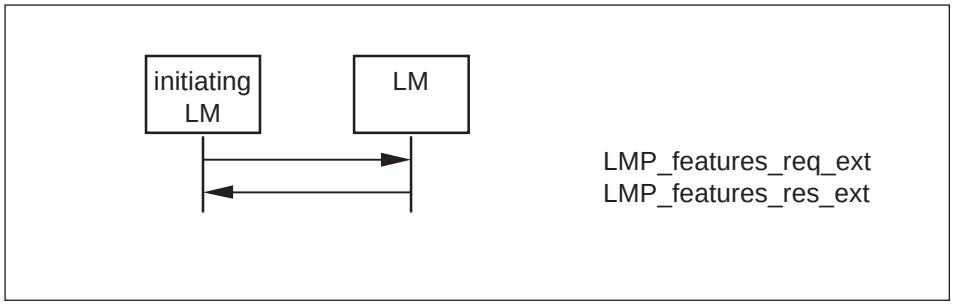

Sequence 71: Request for extended features.

4.3.5 Name Request

LMP supports name request to another device. The name is a user-friendly name associated with the device and consists of a maximum of 248 bytes coded according to the UTF-8 standard. The name is fragmented over one or more DM1 packets. When an LMP_name_req PDU is sent, a name offset indicates which fragment is expected. The corresponding LMP_name_res PDU carries the same name offset, the name length indicating the total number of bytes in the name of the device and the name fragment, where:

- name fragment(N) = name(N + name offset), if (N + name offset) < name length
- name fragment(N) = 0,otherwise.

Here $0 \leq N \leq 13$. In the first sent LMP_name_req PDU, name offset=0. Sequence 72 is then repeated until the initiator has collected all fragments of the name. The name request may be made at any time following a successful baseband paging procedure.

M/O	PDU	Contents
M	LMP_name_req	name offset
M	LMP_name_res	name offset name length name fragment

Table 4.23: Name request PDUs

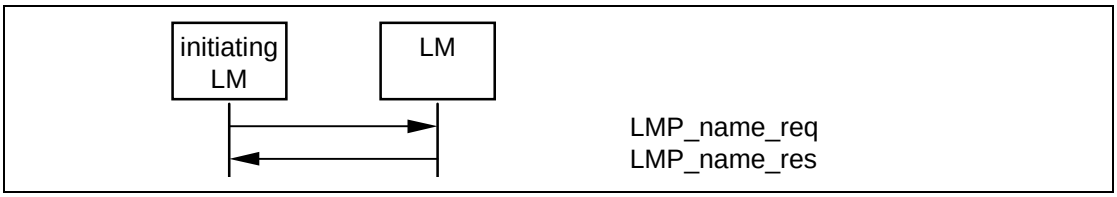

Sequence 72: Device's name requested and it responses.

4.4 ROLE SWITCH

4.4.1 Slot Offset

With LMP_slot_offset the information about the difference between the slot boundaries in different piconets is transmitted. The LMP_slot_offset PDU may be sent anytime after the baseband paging procedure has completed. This PDU carries the parameters slot offset and BD_ADDR. The slot offset shall be the time in microseconds between the start of a master transmission in the current piconet to the start of the next following master transmission in the piconet where the BD_ADDR device (normally the slave) is master at the time that the request is interpreted by the BD_ADDR device.

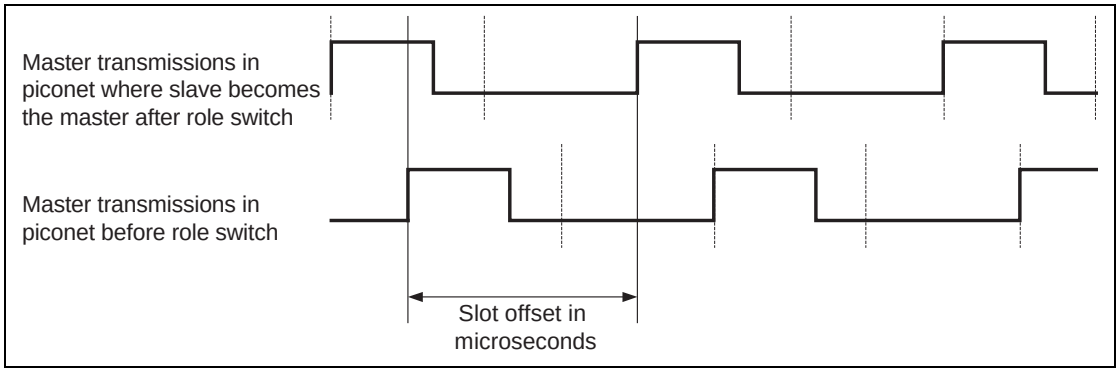

Figure 4.2: Slot offset for role switch

See Section 4.4 on page 278 for the use of LMP_slot_offset in the context of the role switch. In the case of role switch the BD_ADDR is that of the slave device.

M/O	PDU	Contents
O(3)	LMP_slot_offset	slot offset BD_ADDR

Table 4.24: Role switch PDU

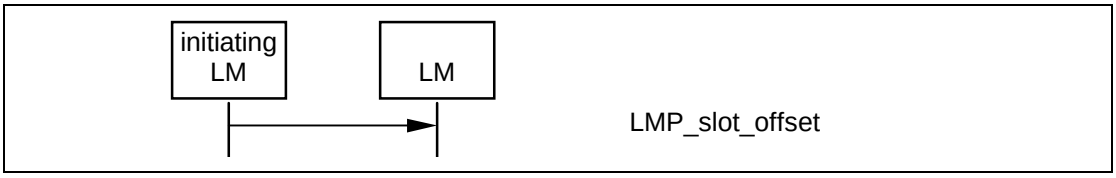

Sequence 73: Slot offset information is sent

4.4.2 Role Switch

Since the paging device always becomes the master of the piconet, a switch of the master slave role is sometimes needed, see Baseband Specification, Section 8.6.5, on page 170. A role switch may be performed anytime after the baseband paging procedure has completed.

Support for LMP_slot_offset is mandatory if LMP_switch_req is supported.

The LMP_slot_offset shall be sent only if the ACL logical transport is in active mode. The LMP_switch_req shall be sent only if the ACL logical transport is in active mode, when encryption is disabled or paused, and all synchronous logical transports on the same physical link are disabled. Additionally, LMP_slot_offset or LMP_switch_req shall not be initiated or accepted while a synchronous logical transport is being negotiated by LM.

M/O	PDU	Contents
O(5)	LMP_switch_req	switch instant
O(5)	LMP_slot_offset	slot offset BD_ADDR

Table 4.25: Role switch PDU

The initiating LM shall pause traffic on the ACL-U logical link (see Baseband Specification, Section 5.3.1, on page 105). If the encryption mode is set to "encryption" and both devices support pausing encryption, then the initiating device shall initiate the pause encryption sequence (see Section 4.2.5.5, “Pause Encryption,” on page 255.) It shall then send an LMP_slot_offset PDU immediately followed by an LMP_switch_req PDU. If the master accepts the role switch and encryption is not already paused, it shall pause traffic on the ACL-U logical link (see Baseband Specification, Section 5.3.1, on page 105) and respond with an LMP_accepted PDU. When the role switch has been completed at the baseband level (successfully or not) if encryption was paused, the device that paused encryption shall initiate the resume encryption sequence (see Section 4.2.5.6, “Resume Encryption,” on page 257). If encryption was not paused, both devices shall re-enable transmission on the ACL-U logical link. If the master rejects the role switch it responds with an LMP_not_accepted PDU and the slave re-enables transmission on the ACL-U logical link. The transaction ID for the role switch PDUs in the sequence (LMP_slot_offset and LMP_switch_req along with the associated LMP_accepted or LMP_not_accepted) shall be set to 1.

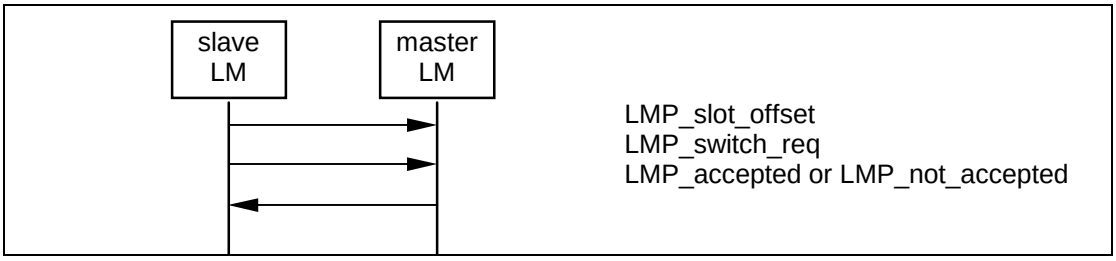

Sequence 74: Role switch (slave initiated).

If the master initiates the role switch and if the encryption mode is set to "encryption" and both devices support pausing encryption, the master device shall initiate the pause encryption sequence (See [Part C] Section 4.2.5.5 on page 255, otherwise it shall pause traffic on the ACL-U logical link (see Baseband Specification, Section 5.3.1, on page 105) and send an LMP_switch_req PDU. If the slave accepts the role switch and encryption is not already paused, it shall pause traffic on the ACL-U logical link (see Baseband Specification, Section 5.3.1, on page 105) and responds with an LMP_slot_offset PDU immediately followed by an LMP_accepted PDU. When the role switch has been completed at the baseband (successfully or not) if encryption was paused, the device that paused encryption shall initiate the resume encryption sequence (see Section 4.2.5.6, “Resume Encryption,” on page 257). If encryption was not paused, both devices re-enable transmission on the ACL-U logical link. If the slave rejects the role switch it responds with an LMP_not_accepted PDU and the master re-enables transmission on the ACL-U logical link. The transaction ID for the role switch PDUs in the sequence (LMP_slot_offset and LMP_switch_req along with the associated LMP_accepted or LMP_not_accepted) shall be set to 0.

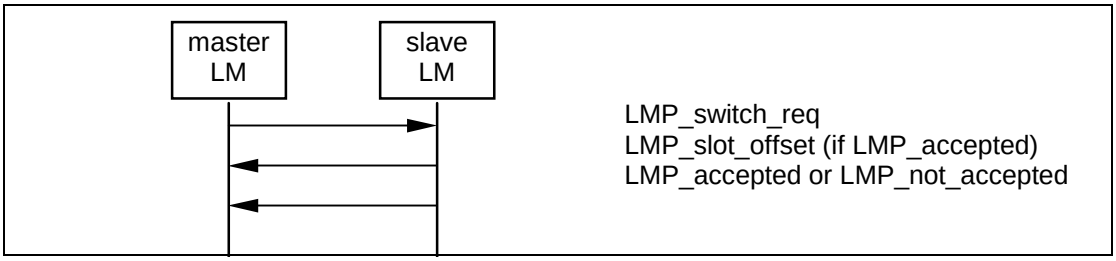

Sequence 75: Role switch (master initiated).

The LMP_switch_req PDU contains a parameter, switch instant, which specifies the instant at which the TDD switch is performed. This is specified as a Bluetooth clock value of the master's clock, that is available to both devices. This instant is chosen by the sender of the message and shall be at least $2*T_{poll}$ or 32 (whichever is greater) slots in the future. The switch instant shall be within 12 hours of the current clock value to avoid clock wrap.

The sender of the LMP_switch_req PDU selects the switch instant and queues the LMP_switch_req PDU to LC for transmission and starts a timer to expire at the switch instant. When the timer expires it initiates the mode switch. In the case of a master initiated switch if the LMP_slot_offset PDU has not been

received by the switch instant the role switch is carried out without an estimate of the slave's slot offset. If an LMP_not_accepted PDU is received before the timer expires then the timer is stopped and the role switch shall not be initiated.

When the LMP_switch_req is received the switch instant is compared with the current master clock value. If it is in the past then the instant has been passed and an LMP_not_accepted PDU with the error code *instant passed* shall be returned. If it is in the future then an LMP_accepted PDU shall be returned assuming the role switch is allowed and a timer is started to expire at the switch instant. When this timer expires the role switch shall be initiated.

After a successful role switch the supervision timeout and poll interval (T_{poll}) shall be set to their default values. The authentication state and the ACO shall remain unchanged. Adaptive Frequency Hopping shall follow the procedures described in Baseband Specification, Section 8.6.5, on page 170. The default value for max_slots shall be used.

4.5 MODES OF OPERATION

4.5.1 Hold Mode

The ACL logical transport of a connection between two Bluetooth devices can be placed in hold mode for a specified hold time. See Baseband Specification, Section 8.8, on page 181 for details.

M/O	PDU	Contents
O(6)	LMP_hold	hold time, hold instant
O(6)	LMP_hold_req	hold time, hold instant

Table 4.26: Hold mode PDUs

The LMP_hold and LMP_hold_req PDUs both contain a parameter, hold instant, that specifies the instant at which the hold becomes effective. This is specified as a Bluetooth clock value of the master's clock, that is available to both devices. The hold instant is chosen by the sender of the message and should be at least $6*T_{poll}$ slots in the future. The hold instant shall be within 12 hours of the current clock value to avoid clock wrap.

4.5.1.1 Master Forces Hold Mode

The master may force hold mode if there has previously been a request for hold mode that has been accepted by the slave. The hold time included in the PDU when the master forces hold mode shall not be longer than any hold time the slave has previously accepted when there was a request for hold mode.

The master LM shall first pause traffic on the ACL-U logical link (see Baseband Specification, Section 5.3.1, on page 105). It shall select the hold instant and queue the LMP_hold PDU to its LC for transmission. It shall then start a timer

to wait until the hold instant occurs. When this timer expires then the connection shall enter hold mode. If the baseband acknowledgement for the LMP_hold PDU is not received then the master may enter hold mode, but it shall not use its low accuracy clock during the hold.

When the slave LM receives an LMP_hold PDU it compares the hold instant with the current master clock value. If it is in the future then it starts a timer to expire at this instant and enters hold mode when it expires.

When the master LM exits from Hold mode it re-enables transmission on the ACL-U logical link.

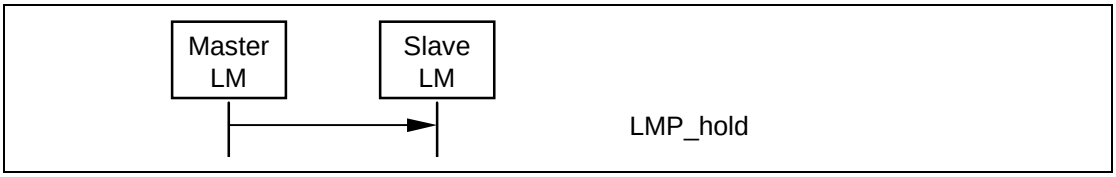

Sequence 76: Master forces slave into hold mode

4.5.1.2 Slave Forces Hold Mode

The slave may force hold mode if there has previously been a request for hold mode that has been accepted by the master. The hold time included in the PDU when the slave forces hold mode shall not be longer than any hold time the master has previously accepted when there was a request for hold mode.

The slave LM shall first complete the transmission of the current packet on the ACL logical transport and then shall suspend transmission on the ACL-U logical link. It shall select the hold instant and queue the LMP_hold PDU to its LC for transmission. It shall then wait for an LMP_hold PDU from the master acting according to the procedure described in Section 4.5.1.1.

When the master LM receives an LMP_hold PDU it shall pause traffic on the ACL-U logical link (see Baseband Specification, Section 5.3.1, on page 105). It shall then inspect the hold instant. If this is less than $6*T_{poll}$ slots in the future it shall modify the instant so that it is at least $6*T_{poll}$ slots in the future. It shall then send an LMP_hold PDU using the mechanism described in Section 4.5.1.1.

When the master and slave LMs exit from Hold mode they shall re-enable transmission on the ACL-U logical link.

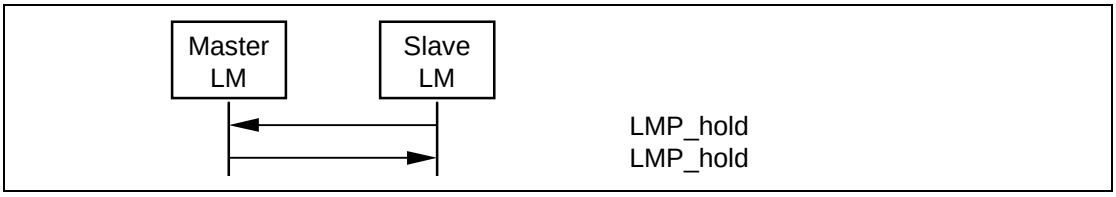

Sequence 77: Slave forces master into hold mode

4.5.1.3 Master or Slave requests Hold Mode

The master or the slave may request to enter hold mode. Upon receipt of the request, the same request with modified parameters may be returned or the negotiation may be terminated. If an agreement is seen an LMP_accepted PDU terminates the negotiation and the ACL link is placed in hold mode. If no agreement is seen, an LMP_not_accepted PDU with the error code *unsupported parameter value* terminates the negotiation and hold mode is not entered.

The initiating LM shall pause traffic on the ACL-U logical link (see Baseband Specification, Section 5.3.1, on page 105). On receiving an LMP_hold_req PDU the receiving LM shall complete the transmission of the current packet on the ACL logical transport and then shall suspend transmission on the ACL-U logical link.

The LM sending the LMP_hold_req PDU selects the hold instant, that shall be at least $9*T_{poll}$ slots in the future. If this is a response to a previous LMP_hold_req PDU and the contained hold instant is at least $9*T_{poll}$ slots in the future then this shall be used. The LMP_hold_req PDU shall then be queued to its LC for transmission and a timer shall be started to expire at this instant and the connection enters hold mode when it expires unless an LMP_not_accepted or LMP_hold_req PDU is received by its LM before that point. If the LM receiving LMP_hold_req PDU agrees to enter hold mode it shall return an LMP_accepted PDU and shall start a timer to expire at the hold instant. When this timer expires it enters hold mode.

When each LM exits from Hold mode it shall re-enable transmission on the ACL-U logical link.

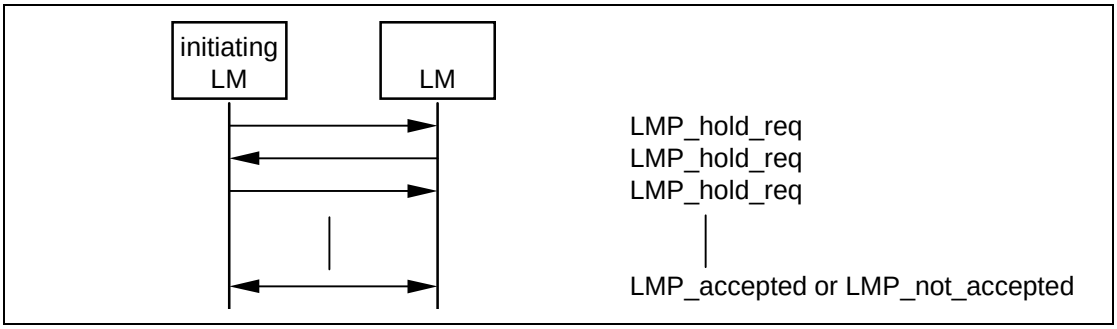

Sequence 78: Negotiation for hold mode

4.5.2 Park State

If a slave does not need to participate in the channel, but should still remain synchronized to the master, it may be placed in park state. See Baseband Specification, Section 8.9, on page 182 for details.

Note: To keep a parked slave connected the master shall periodically unpark and repark the slave if the supervision timeout is not set to zero (see Baseband Specification, Section 3.1, on page 94).

All PDUs sent from the master to parked slaves are carried on the PSB-C logical link (LMP link of parked slave broadcast logical transport). These PDUs, LMP_set_broadcast_scan_window, LMP_modify_beacon, LMP_unpark_BD_addr_req and LMP_unpark_PM_addr_req, are the only PDUs that shall be sent to a slave in park state and the only PDUs that shall be broadcast. To increase reliability for broadcast, the packets are as short as possible. Therefore the format for these LMP PDUs are somewhat different. The parameters are not always byte-aligned and the length of the PDUs is variable.

The messages for controlling park state include parameters, defined in Baseband Specification, Section 8.9, on page 182. When a slave is placed in park state it is assigned a unique PM_ADDR, that can be used by the master to unpark that slave. The all-zero PM_ADDR has a special meaning; it is not a valid PM_ADDR. If a device is assigned this PM_ADDR, it shall be identified with its BD_ADDR when it is unparked by the master.

4.5.2.1 Master requests slave to enter park state

M/O	PDU	Contents
O(8)	LMP_park_req	timing control flags D_B T_B N_B Δ_B PM_ADDR AR_ADDR N_{Bsleep} D_{Bsleep} D_{access} T_{access} $N_{acc\text{-}slots}$ N_{poll} M_{access} access scheme
O(8)	LMP_set_broadcast_scan_window	timing control flags D_B (optional) broadcast scan window
O(8)	LMP_modify_beacon	timing control flags D_B (optional) T_B N_B Δ_B D_{access} T_{access} $N_{acc\text{-}slots}$ N_{poll} M_{access} access scheme

Table 4.27: PDUs used for park state

M/O	PDU	Contents
O(8)	LMP_unpark_PM_ADDR_req	timing control flags D_B (optional) LT_ADDR 1st unpark LT_ADDR 2nd unpark PM_ADDR 1st unpark PM_ADDR 2nd unpark LT_ADDR 3rd unpark LT_ADDR 4th unpark PM_ADDR 3rd unpark PM_ADDR 4th unpark LT_ADDR 5th unpark LT_ADDR 6th unpark PM_ADDR 5th unpark PM_ADDR 6th unpark LT_ADDR 7th unpark PM_ADDR 7th unpark
O(8)	LMP_unpark_BD_ADDR_req	timing control flags D_B (optional) LT_ADDR LT_ADDR (optional) BD_ADDR BD_ADDR (optional)

Table 4.27: PDUs used for park state

The master can request park state. The master LM shall pause traffic on the ACL-U logical link (see Baseband Specification, Section 5.3.1, on page 105) and then send an LMP_park_req PDU. If the slave agrees to enter park state it shall pause traffic on the ACL-U logical link (see Baseband Specification, Section 5.3.1, on page 105). and then respond with an LMP_accepted PDU.

When the slave queues an LMP_accepted PDU it shall start a timer for 6*Tpoll slots. If the baseband acknowledgement is received before this timer expires it shall enter park state immediately otherwise it shall enter park state when the timer expires.

When the master receives an LMP_accepted PDU it shall start a timer for 6*Tpoll slots. When this timer expires the slave is in park state and the LT_ADDR may be re-used.

If the master never receives an LMP_accepted PDU then a link supervision timeout will occur.

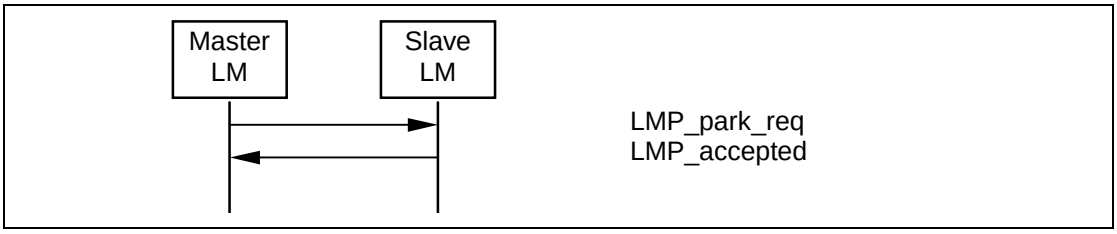

Sequence 79: Slave accepts to enter park state.

If the slave rejects the attempt to enter park state it shall respond with an LMP_not_accepted PDU and the master shall re-enable transmission on the ACL-U logical link.

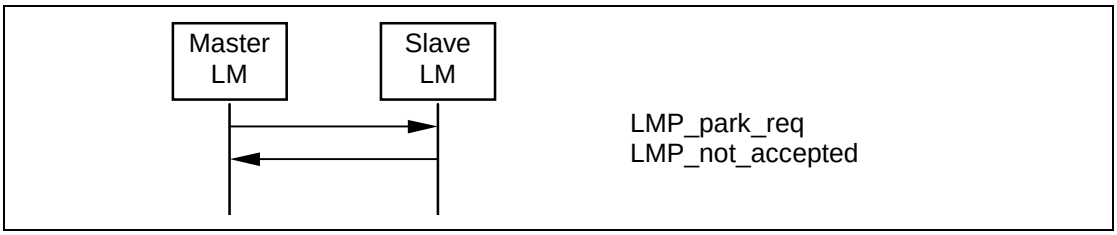

Sequence 80: Slave rejects to enter into park state

4.5.2.2 Slave requests to enter Park State

The slave can request park state. The slave LM shall pause traffic on the ACL-U logical link (see Baseband Specification, Section 5.3.1, on page 105) and then send an LMP_park_req PDU. When sent by the slave, the parameters PM_ADDR and AR_ADDR are not valid and the other parameters represent suggested values. If the master accepts the slave's request to enter park state it shall pause traffic on the ACL-U logical link (see Baseband Specification, Section 5.3.1, on page 105) and then send an LMP_park_req PDU, where the parameter values may be different from the values in the PDU sent from the slave. If the slave can accept these parameter it shall respond with an LMP_accepted PDU.

When the slave queues an LMP_accepted PDU for transmission it shall start a timer for 6*Tpoll slots. If the baseband acknowledgement is received before this timer expires it shall enter park state immediately otherwise it shall enter park state when the timer expires.

When the master receives an LMP_accepted PDU it shall start a timer for 6*Tpoll slots. When this timer expires the slave is in park state and the LT_ADDR may be re-used.

If the master never receives the LMP_accepted PDU then a link supervision timeout will occur.

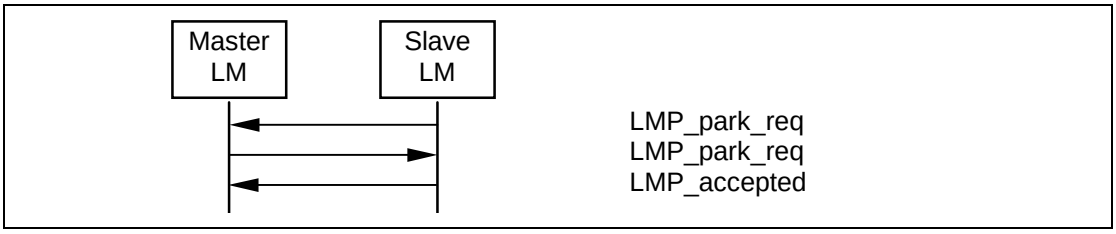

Sequence 81: Slave requests to enter park state and accepts master's beacon parameters

If the master does not agree that the slave enters park state it shall send an LMP_not_accepted PDU. The slave shall then re-enable transmission on the ACL-U logical link.

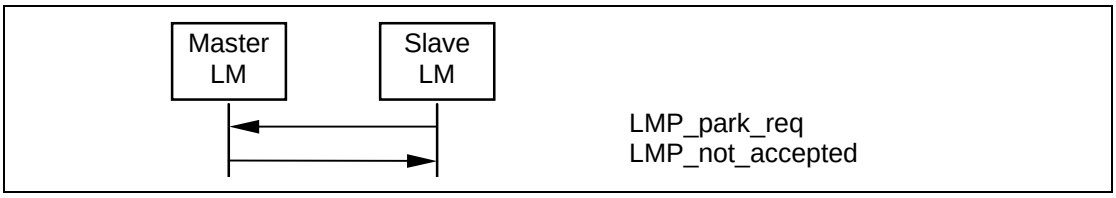

Sequence 82: Master rejects slave's request to enter park state

If the slave does not accept the parameters in the LMP_park_req PDU sent from the master it shall respond with an LMP_not_accepted PDU and both devices shall re-enable transmission on the ACL-U logical link.

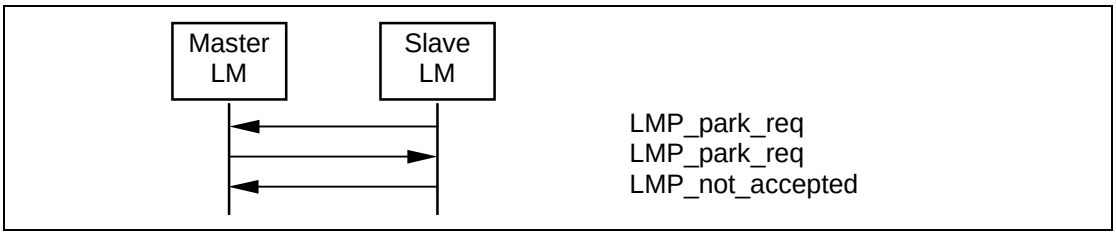

Sequence 83: Slave requests to enter park state, but rejects master's beacon parameters

4.5.2.3 Master sets up Broadcast Scan Window

If more broadcast capacity is needed than the beacon train, the master may indicate to the slaves that more broadcast information will follow the beacon train by sending an LMP_set_broadcast_scan_window PDU. This message shall be sent in a broadcast packet at the beacon slot(s). The scan window shall start in the beacon instant and shall only be valid for the current beacon.

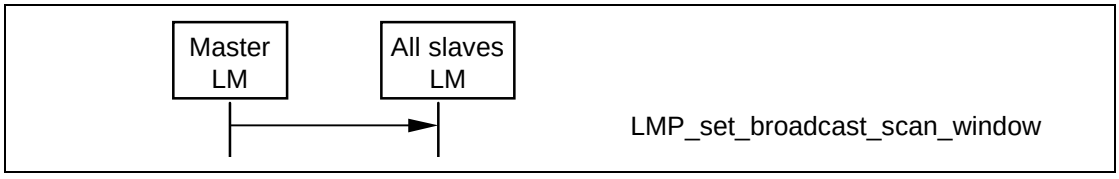

Sequence 84: Master notifies all slaves of increase in broadcast capacity

4.5.2.4 Master Modifies Beacon Parameters

When the beacon parameters change the master notifies the parked slaves of this by sending an LMP_modify_beacon PDU. This PDU shall be sent in a broadcast packet.

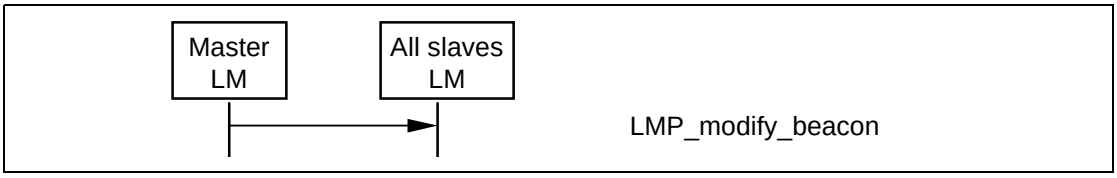

Sequence 85: Master modifies beacon parameters

4.5.2.5 Unparking Slaves

The master can unpark one or many slaves by sending a broadcast LMP message including the PM_ADDR or the BD_ADDR of the device(s) to be unparked. Broadcast LMP messages are carried on the PSB-C logical link. See Baseband Specification, Section 8.9.5, on page 188 for further details. This message also includes the LT_ADDR that the master assigns to the slave(s). After sending this message, the master shall check the success of the unpark by polling each unparked slave by sending POLL packets, so that the slave is granted access to the channel. The unparked slave shall then send a response with an LMP_accepted PDU. If this message is not received from the slave within a certain time after the master sent the unpark message, the unpark failed and the master shall consider the slave as still being in park state.

One PDU is used where the parked device is identified with the PM_ADDR, and another PDU is used where it is identified with the BD_ADDR. Both messages have variable length depending on the number of slaves the master unparks. For each slave the master wishes to unpark an LT_ADDR followed by the PM_ADDR or BD_ADDR of the device that is assigned this LT_ADDR is included in the payload. If the slaves are identified with the PM_ADDR a maximum of 7 slaves can be unparked with the same message. If they are identified with the BD_ADDR a maximum of 2 slaves can be unparked with the same message.

After a successful unparking, both devices re-enable transmission on the ACL-U logical link.

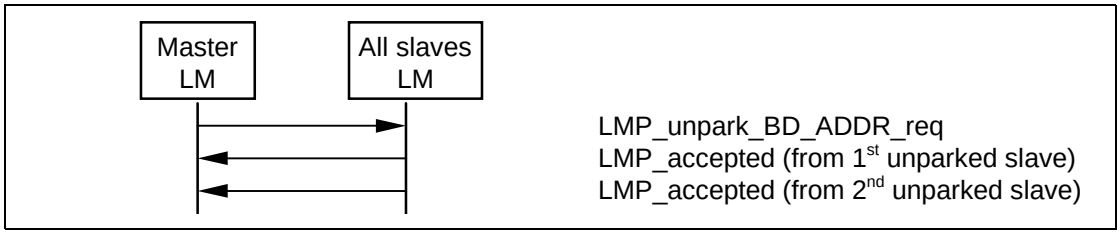

Sequence 86: Master unparks slaves addressed with their BD_ADDR

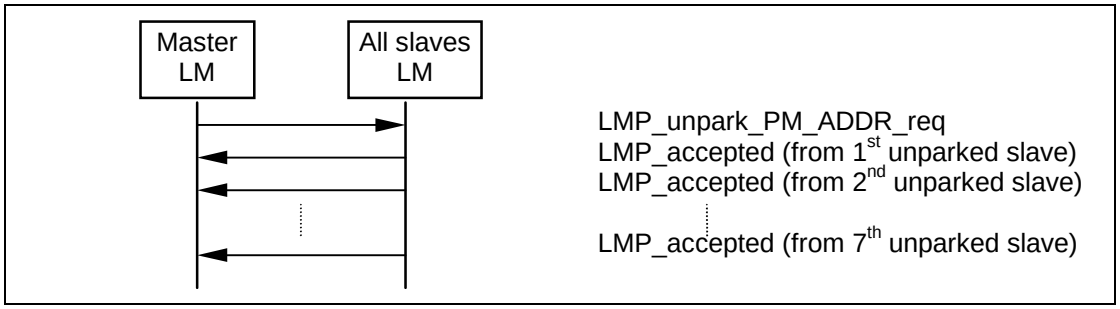

Sequence 87: Master unparks slaves addressed with their PM_ADDR

4.5.3 Sniff Mode

To enter sniff mode, master and slave negotiate a sniff interval T_{sniff} and a sniff offset, D_{sniff}, that specifies the timing of the sniff slots. The offset determines the time of the first sniff slot; after that the sniff slots follow periodically with the sniff interval T_{sniff}. To avoid clock wrap-around during the initialization, one of two options is chosen for the calculation of the first sniff slot. A timing control flag in the message from the master indicates this. Only bit1 of the timing control flag is valid.

When the ACL logical transport is in sniff mode the master shall only start a transmission in the sniff slots. Two parameters control the listening activity in the slave: the sniff attempt and the sniff timeout. The sniff attempt parameter determines for how many slots the slave shall listen when the slave is not treating this as a scatternet link, beginning at the sniff slot, even if it does not receive a packet with its own LT_ADDR. The sniff timeout parameter determines for how many additional slots the slave shall listen when the slave is not treating this as a scatternet link if it continues to receive only packets with its own LT_ADDR. It is not possible to modify the sniff parameters while the device is in sniff mode.

M/O	PDU	Contents
O(7)	LMP_sniff_req	timing control flags D_{sniff} T_{sniff} sniff attempt sniff timeout
O(7)	LMP_unsniff_req	-

Table 4.28: Sniff mode PDUs

4.5.3.1 Master or Slave requests Sniff Mode

Either the master or the slave may request entry to sniff mode. The process is initiated by sending an LMP_sniff_req PDU containing a set of parameters. The receiving LM shall then decide whether to reject the attempt by sending an LMP_not_accepted PDU, to suggest different parameters by replying with an LMP_sniff_req PDU or to accept the request.

Before the first time that the master sends LMP_sniff_req it shall enter sniff transition mode. If the master receives or sends an LMP_not_accepted PDU it shall exit from sniff transition mode. If the master receives an LMP_sniff_req PDU it shall enter sniff transition mode.

If the master decides to accept the request it shall send an LMP_accepted PDU. When the master receives the baseband acknowledgement for this PDU it shall exit sniff transition mode and enter sniff mode.

If the master receives an LMP_accepted PDU the master shall exit from sniff transition mode and enter sniff mode.

If the slave receives an LMP_sniff_req PDU it must decide whether to accept the request. If the slave does not wish to enter sniff mode then it replies with an LMP_not_accepted PDU. If it is happy to enter sniff mode but requires a different set of parameters it shall respond with an LMP_sniff_req PDU containing the new parameters. If the slave decides that the parameters are acceptable then it shall send an LMP_accepted PDU and enter sniff mode. If the slave receives an LMP_not_accepted PDU it shall terminate the attempt to enter sniff mode.

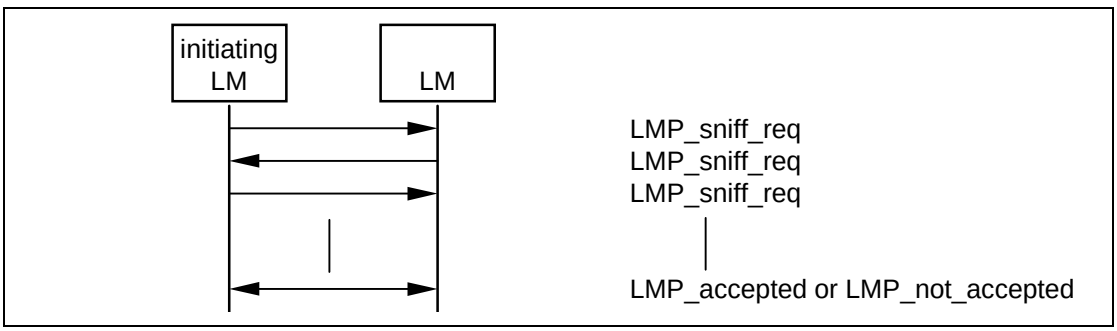

Sequence 88: Negotiation for sniff mode

4.5.3.2 Moving a Slave From Sniff Mode to Active Mode

Sniff mode may be exited by either the master or the slave sending an LMP_unsniff_req PDU. The requested device shall reply with an LMP_accepted PDU.

If the master requests an exit from sniff mode it shall enter sniff transition mode and then send an LMP_unsniff_req PDU. When the slave receives the LMP_unsniff_req it shall exit from sniff mode and reply with an LMP_accepted PDU. When the master receives the LMP_accepted PDU it shall exit from sniff transition mode and enter active mode.

If the slave requests an exit from sniff mode it shall send an LMP_unsniff_req PDU. When the master receives the LMP_unsniff_req PDU it shall enter sniff transition mode and then send an LMP_accepted PDU. When the slave receives the LMP_accepted PDU it shall exit from sniff mode and enter active mode. When the master receives the baseband acknowledgement for the LMP_accepted PDU it shall leave sniff transition mode and enter active mode.

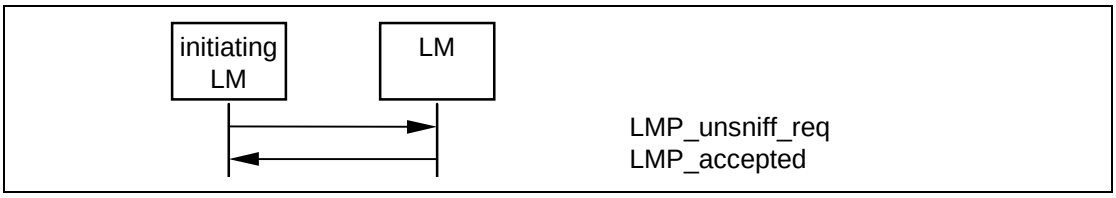

Sequence 89: Slave moved from sniff mode to active mode

4.5.3.3 Sniff Subrating

Once sniff mode has been started, sniff subrating may be initiated by either Link Manager.

The LMP_sniff_subrating_req and LMP_sniff_subrating_res PDUs specify parameters that the peer and initiating device shall use respectively for sniff subrating.

The sniff subrating instant value shall be used to calculate the first sniff subrating anchor point. The sniff subrating instant value shall be a maximum of 2^{16} time slots (40.9 seconds) from the current master clock and shall be a sniff anchor point. The sniff subrating instant value should indicate a clock value in the future with respect to the clock value when the LMP message is first sent.

If the LMP_sniff_subrating_req PDU is sent by the master, the sniff subrating instant value shall be used. The slave device shall reply with an LMP_sniff_subrating_res PDU using the same sniff subrating instant value given by the master.

When the LMP_sniff_subrating_req PDU is sent by the slave, the sniff subrating instant value shall be ignored. The master device shall reply with an

LMP_sniff_subrating_res PDU with the sniff subrating instant value that shall be used for sniff subrating.

The initiating device shall not transition to the new sniff subrating parameters until the sniff subrating instant has passed and the LMP_sniff_subrating_res PDU has been received. The non-initiating device shall remain in sniff mode and shall not transition to the new sniff subrating parameters until after the sniff subrating instant has passed and the baseband acknowledgement of the LMP_sniff_subrating_res PDU has been received.

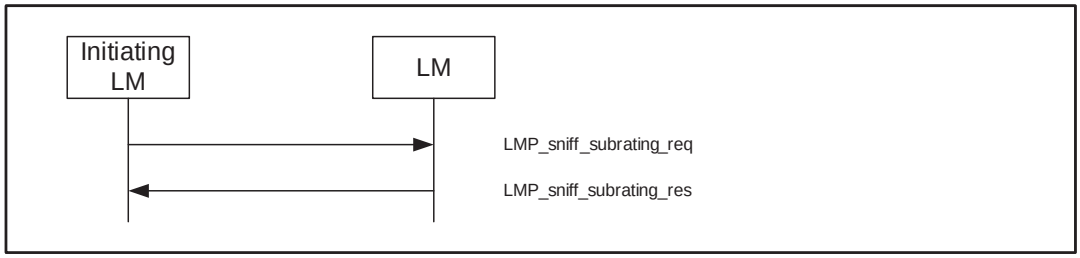

Sequence 90: LM accepts sniff subrating request

A device shall not send a new LMP_sniff_subrating_req PDU until the previous sniff subrating transaction has completed and the sniff subrating instant has passed.

The maximum clock interval between two sniff subrating anchor points shall be less than the link supervision timeout. If the link supervision timeout needs to be updated to a shorter value than the clock interval between two sniff subrating anchor points, the master shall disable sniff subrating, shall send the LMP_Supervision_Timeout PDU with the new supervision timeout value, and shall start using the new supervision timeout value after receiving a baseband ACK for the LMP_Supervision_Timeout PDU. Upon reception of the LMP_Supervision_Timeout PDU the slave shall disable sniff subrating and shall start using the new supervision timeout value.

The master shall initiate sniff subrating with the max_sniff_subrate parameter less than the new supervision timeout. The slave shall respond with the LMP_sniff_subrating_res PDU with the max_sniff_subrate parameter less than the new supervision timeout.

Note: When changing the link supervision timeout while sniff subrating is enabled, refer to Section 4.5.3.3 on page 292.

4.6 LOGICAL TRANSPORTS

When a connection is first established between two devices the connection consists of the default ACL logical links: ACL-C (for LMP messages) and ACL-U (for L2CAP data.) One or more synchronous logical transports (SCO or eSCO) may then be added. A new logical transport shall not be created if it would cause all slots to be allocated to reserved slots on secondary LT_ADDRs.

4.6.1 SCO Logical Transport

The SCO logical transport reserves slots separated by the SCO interval, T_{sco}. The first slot reserved for the SCO logical transport is defined by T_{sco} and the SCO offset, D_{sco}. See Baseband Specification, Section 8.6.2, on page 165 for details. A device shall initiate a request for HV2 or HV3 packet type only if the other device supports it (bits 12, 13) in its features mask. A device shall initiate CVSD, μ-law or A-law coding or uncoded (transparent) data only if the other device supports the corresponding feature. To avoid problems with a wrap-around of the clock during initialization of the SCO logical transport, the timing control flags parameter is used to indicate how the first SCO slot shall be calculated. Only bit1 of the timing control flags parameter is valid. The SCO link is distinguished from all other SCO links by an SCO handle. The SCO handle zero shall not be used.

M/O	PDU	Contents
O(11)	LMP_SCO_link_req	SCO handle timing control flags D_{sco} T_{sco} SCO packet air mode
O(11)	LMP_remove_SCO_link_req	SCO handle error

Table 4.29: SCO link management PDUs

4.6.1.1 Master Initiates an SCO Link

When establishing an SCO link the master sends a request, a LMP_SCO_link_req PDU, with parameters that specify the timing, packet type and coding that will be used on the SCO link. Each of the SCO packet types supports three different voice coding formats on the air-interface: μ-law log PCM, A-law log PCM and CVSD. The air coding by log PCM or CVSD may be deactivated to achieve a transparent synchronous data link at 64 kbits/s.

The slots used for the SCO links are determined by three parameters controlled by the master: T_{sco}, D_{sco} and a flag indicating how the first SCO slot is calculated. After the first slot, the SCO slots follow periodically at an interval of T_{sco}.

If the slave does not accept the SCO link, but is willing to consider another possible set of SCO parameters, it can indicate what it does not accept in the error code field of LMP_not_accepted PDU. The master may then issue a new request with modified parameters.

The SCO handle in the message shall be different from existing SCO link(s).

If the SCO packet type is HV1 the LMP_accepted shall be sent using the DM1 packet.

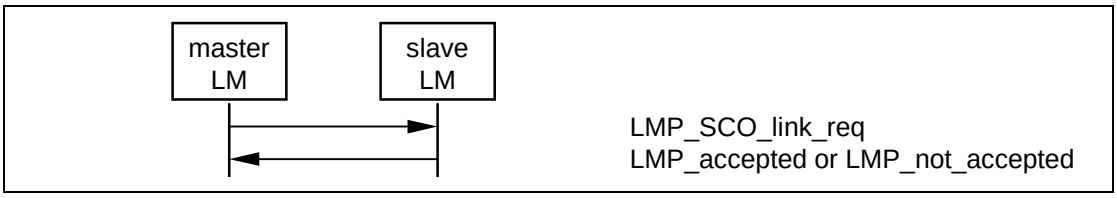

Sequence 91: Master requests an SCO link

4.6.1.2 Slave Initiates an SCO Link

The slave may initiate the establishment of an SCO link. The slave sends an LMP_SCO_link_req PDU, but the parameters timing control flags and D_{sco} are invalid as well as the SCO handle, that shall be zero. If the master is not capable of establishing an SCO link, it replies with an LMP_not_accepted PDU. Otherwise it sends back an LMP_SCO_link_req PDU. This message includes the assigned SCO handle, D_{sco} and the timing control flags. The master should try to use the same parameters as in the slave request; if the master cannot meet that request, it is allowed to use other values. The slave shall then reply with LMP_accepted or LMP_not_accepted PDU.

If the SCO packet type is HV1 the LMP_accepted shall be sent using the DM1 packet.

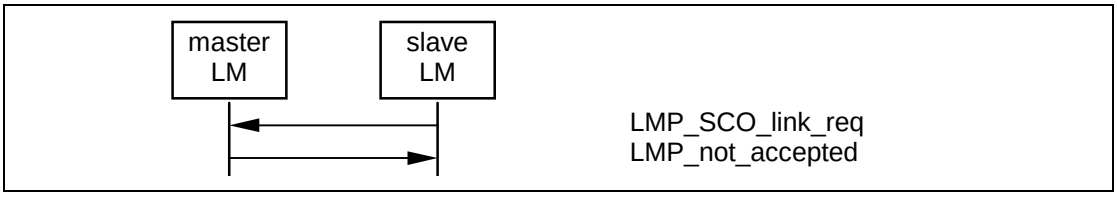

Sequence 92: Master rejects slave's request for an SCO link

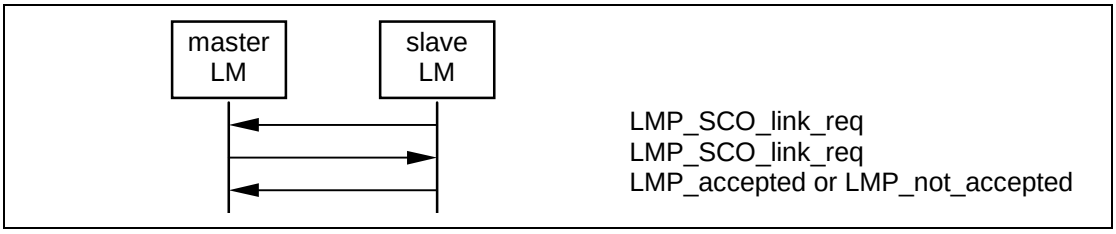

Sequence 93: Master accepts slave's request for an SCO link

4.6.1.3 Master Requests Change of SCO Parameters

The master sends an LMP_SCO_link_req PDU, where the SCO handle is the handle of the SCO link the master wishes to change parameters for. If the slave accepts the new parameters, it replies with an LMP_accepted PDU and the SCO link will change to the new parameters. If the slave does not accept the new parameters, it shall reply with an LMP_not_accepted PDU and the SCO link is left unchanged. When the slave replies with an LMP_not_accepted PDU it shall indicate in the error code parameter what it does not accept. The master may then try to change the SCO link again with modified parameters. The sequence is the same as in Section 4.6.1.1 on page 294.

4.6.1.4 Slave Requests Change of SCO Parameters

The slave sends an LMP_SCO_link_req PDU, where the SCO handle is the handle of the SCO link to be changed. The parameters timing control flags and D_{sco} are not valid in this PDU. If the master does not accept the new parameters it shall reply with an LMP_not_accepted PDU and the SCO link is left unchanged. If the master accepts the new parameters it shall reply with an LMP_SCO_link_req PDU containing the same parameters as in the slave request. When receiving this message the slave replies with an LMP_not_accepted PDU if it does not accept the new parameters. The SCO link is then left unchanged. If the slave accepts the new parameters it replies with an LMP_accepted PDU and the SCO link will change to the new parameters. The sequence is the same as in Section 4.6.1.2 on page 295.

4.6.1.5 Remove a SCO link

Master or slave may remove the SCO link by sending a request including the SCO handle of the SCO link to be removed and an error code indicating why the SCO link is removed. The receiving side shall respond with an LMP_accepted PDU.

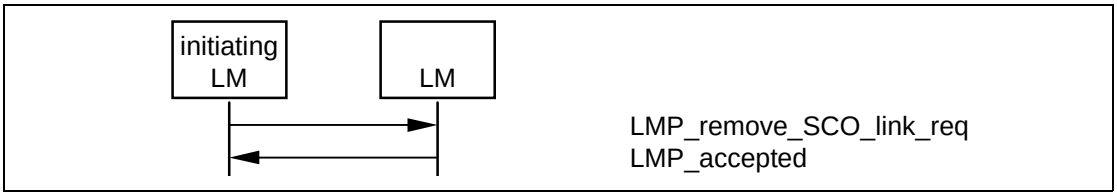

Sequence 94: SCO link removed

Note that the slave shall use the initialization flag appropriate to the master's Bluetooth clock. See section 8.6.3, “eSCO,” on page 167.

4.6.2 eSCO Logical Transport

After an ACL link has been established, one or more extended SCO (eSCO) links can be set up to the remote device. The eSCO links are similar to SCO links using timing control flags, an interval T_{eSCO} and an offset D_{eSCO}. Only bit1 of the timing control flags parameter is valid. As opposed to SCO links, eSCO links have a configurable data rate that may be asymmetric, and can be set up to provide limited retransmissions of lost or damaged packets inside a retransmission window of size W_{eSCO}. The D_{eSCO} shall be based on CLK.

M/O	PDU	Contents
O(31)	LMP_eSCO_link_req	eSCO handle eSCO LT_ADDR timing control flags D_{eSCO} T_{eSCO} W_{eSCO} eSCO packet type M->S eSCO packet type S->M packet length M->S packet length S->M air mode negotiation state
O(31)	LMP_remove_eSCO_link_req	eSCO handle error

Table 4.30: PDUs used for managing the eSCO links

The parameters D_{eSCO}, T_{eSCO}, W_{eSCO}, eSCO packet type M->S, eSCO packet type S->M, packet length M->S, packet length S->M are henceforth referred to as the negotiable parameters.

4.6.2.1 Master initiates an eSCO link

When establishing an eSCO link the master sends an LMP_eSCO_link_req PDU specifying all parameters. The slave may accept this with an LMP_accepted_ext PDU, reject it with an LMP_not_accepted_ext PDU, or respond with its own LMP_eSCO_link_req specifying alternatives for some or all parameters. The slave shall not negotiate the eSCO handle or eSCO LT_ADDR parameters. The negotiation of parameters continues until the master or slave either accepts the latest parameters with an LMP_accepted_ext PDU, or terminates the negotiation with an LMP_not_accepted_ext PDU. The negotiation shall use the procedures defined in Section 4.6.2.5 on page 300.

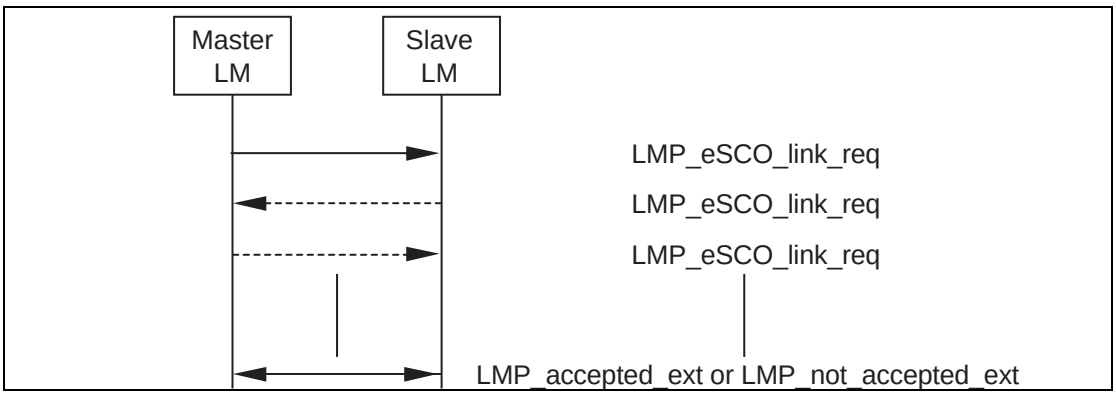

Sequence 95: Master requests an eSCO link

4.6.2.2 Slave Initiates an eSCO Link

When attempting to establish an eSCO link the slave shall send an LMP_eSCO_link_req PDU specifying all parameters, with the exception of eSCO LT_ADDR and eSCO handle, which are invalid. The latter shall be set to zero. The master may respond to this with an LMP_eSCO_link_req PDU, filling in these missing parameters, and potentially changing the other requested parameters. The slave can accept this with an LMP_accepted_ext PDU, or respond with a further LMP_eSCO_link_req PDU specifying alternatives for some or all of the parameters. The negotiation of parameters continues until the master or slave either accepts the latest parameters with an LMP_accepted_ext PDU, or terminates the negotiation with an LMP_not_accepted_ext PDU.

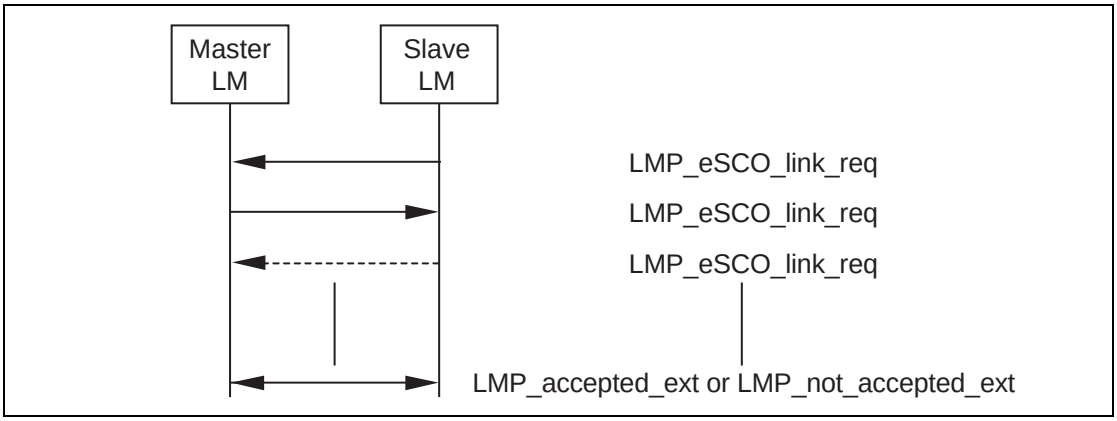

Sequence 96: Slave requests an eSCO link.

Note that the slave should use the initialization flag appropriate to the master's Bluetooth clock. See Baseband section section 8.6.3.

The master may reject the request immediately with an LMP_not_accepted_ext PDU. The negotiation shall use the procedures defined in Section 4.6.2.5 on page 300.

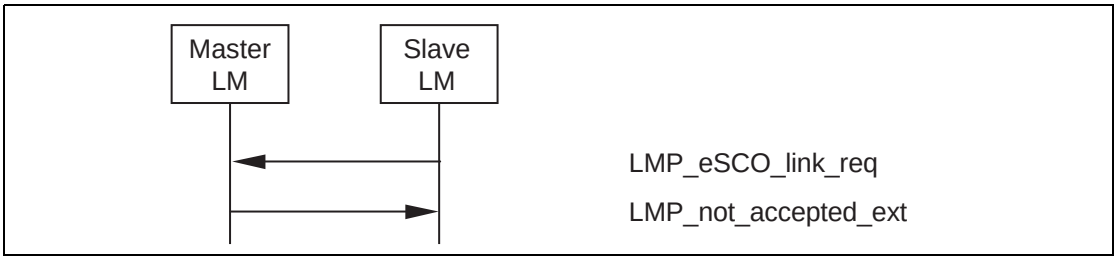

Sequence 97: Master rejects slave's request for an eSCO link.

4.6.2.3 Master or slave requests change of eSCO parameters

The master or slave may request a renegotiation of the eSCO parameters. The master or slave shall send an LMP_eSCO_link_req PDU with the eSCO handle of the eSCO link the device wishes to renegotiate. The remote device may accept the changed parameters immediately with LMP_accepted_ext PDU, or the negotiation may be continued with further LMP_eSCO_link_req PDUs until the master or slave accepts the latest parameters with an LMP_accepted_ext PDU or terminates the negotiation with an LMP_not_accepted_ext PDU. In the case of termination with an LMP_not_accepted_ext PDU, the eSCO link continues on the previously negotiated parameters.

The sequence is the same as in Section 4.6.2.2 on page 298.

During re-negotiation, the eSCO LT_ADDR and eSCO handle shall not be re-negotiated and shall be set to the originally negotiated values. The negotiation shall use the procedures defined in Section 4.6.2.5 on page 300.

4.6.2.4 Remove an eSCO Link

Either the master or slave may remove the eSCO link by sending a request including the eSCO handle of the eSCO link to be removed and a error code indicating why the eSCO link is removed. The receiving side shall respond with an LMP_accepted_ext PDU. The slave shall shut down its eSCO logical transport before sending its PDU (LMP_remove_eSCO_link_req for slave initiated removal, LMP_accepted_ext for master initiated). The master shall not reassign the eSCO LT_ADDR until the end of the removal procedure. If, for some reason, such as the slave being out of range, the procedure cannot be completed, the master shall not reassign the eSCO LT_ADDR until the primary LT_ADDR is available for reuse (supervision timeout).

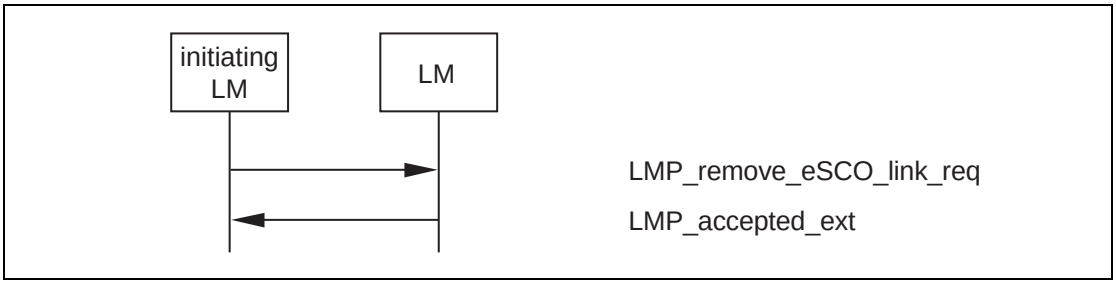

Sequence 98: eSCO link removed

4.6.2.5 Rules for the LMP negotiation and renegotiation

Rule 1: the negotiation_state shall be set to 0 by the initiating LM. After the initial LMP_eSCO_link_req is sent the negotiation_state shall not be set to 0.

Rule 2: if the bandwidth (defined as 1600 times the packet length in bytes divided by T_{eSCO} in slots) for either RX or TX or the air_mode cannot be accepted the device shall send LMP_not_accepted_ext with the appropriate error code.

Rule 3: Bandwidth and air_mode are not negotiable and shall not be changed for the duration of the negotiation. Once one side has rejected the negotiation (with LMP_not_accepted_ext) a new negotiation may be started with different bandwidth and air_mode parameters.

Rule 4: if the parameters will cause a latency violation (T_{eSCO} + W_{eSCO} + reserved synchronous slots > allowed local latency) the device should propose new parameters that shall not cause a reserved slot violation or latency violation for the device that is sending the parameters. In this case the negotiation_state shall be set to 3. Otherwise the device shall send LMP_not_accepted_ext.

Rule 5: once a device has received an LMP_eSCO_link_req with the negotiation_state set to 3 (latency violation), the device shall not propose any combination of packet type, T_{eSCO}, and W_{eSCO} that will give an equal or larger

latency than the combination that caused the latency violation for the other device.

Rule 6: if the parameters cause both a reserved slot violation and a latency violation the device shall set the negotiation_state to 3 (latency violation).

Rule 7: if the parameters will cause a reserved slot violation the device should propose new parameters that shall not cause a reserved slot violation. In this case the negotiation_state shall be set to 2. Otherwise the device shall send LMP_not_accepted_ext.

Rule 8: If the requested parameters are not supported the device should propose a setting that is supported, and set the negotiation_state to 4. If it is not possible to find such a parameter set, the device shall send LMP_not_accepted_ext.

Rule 9: when proposing new parameters for reasons other than a latency violation, reserved slot violation, or configuration not supported, the negotiation_state shall be set to 1.

4.6.2.6 Negotiation State Definitions

Reserved Slot Violation: a reserved slot violation is when the receiving LM cannot setup the requested eSCO logical transport because the eSCO reserved slots would overlap with other regularly scheduled slots (e.g. other synchronous reserved slots, sniff anchor points, or park beacons).

Latency Violation: a latency violation is when the receiving LM cannot setup the requested eSCO logical transport because the latency (W_{eSCO}+T_{eSCO} + reserved synchronous slots) is greater than the maximum allowed latency.

Configuration not supported: The combination of parameters requested is not inside the supported range for the device.

4.7 TEST MODE

LMP has PDUs to support different test modes used for certification and compliance testing of the Bluetooth radio and baseband. See "Test Methodology" on page 335 in Vol. 3 for a detailed description of these test modes.

4.7.1 Activation and Deactivation of Test Mode

The activation may be carried out locally (via a HW or SW interface), or using the air interface.

- For activation over the air interface, entering the test mode shall be locally enabled for security and type approval reasons. The implementation of this local enabling is not subject to standardization.

  The tester sends an LMP command that shall force the DUT to enter test mode. The DUT shall terminate all normal operation before entering the test mode.

  The DUT shall return an LMP_Accepted on reception of an activation command. LMP_Not_Accepted shall be returned if the DUT is not locally enabled.
- If the activation is performed locally using a HW or SW interface, the DUT shall terminate all normal operation before entering the test mode.

  Until a connection to the tester exists, the device shall perform page scan and inquiry scan. Extended scan activity is recommended.

The test mode is activated by sending an LMP_test_activate PDU to the device under test (DUT). The DUT is always the slave. The lm shall be able to receive this message anytime. If entering test mode is locally enabled in the DUT it shall respond with an LMP_accepted PDU and test mode is entered. Otherwise the DUT responds with an LMP_not_accepted PDU and the DUT remains in normal operation. The error code in the LMP_not_accepted PDU shall be *PDU not allowed*.

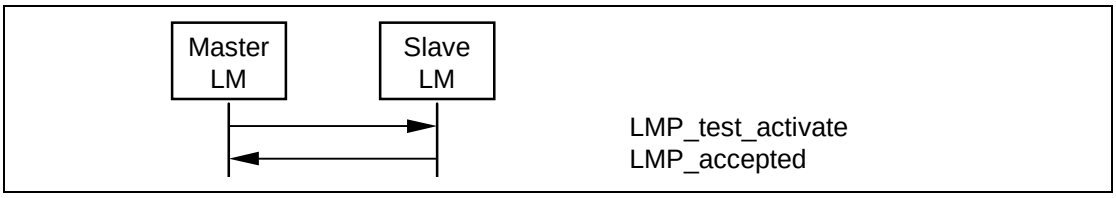

Sequence 99: Activation of test mode successful.

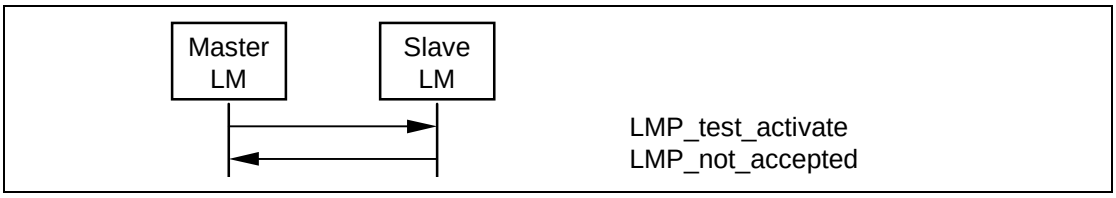

Sequence 100: Activation of test mode fails. Slave is not allowed to enter test mode.

The test mode can be deactivated in two ways. Sending an LMP_test_control PDU with the test scenario set to "exit test mode" exits the test mode and the slave returns to normal operation still connected to the master. Sending an LMP_detach PDU to the DUT ends the test mode and the connection.

4.7.2 Control of Test Mode

Control and configuration is performed using special LMP commands (see Section 4.7.3 on page 303). These commands shall be rejected if the Bluetooth device is not in test mode. In this case, an LMP_not_accepted shall be returned. The DUT shall return an LMP_accepted on reception of a control command when in test mode.

A Bluetooth device in test mode shall ignore all LMP commands not related to control of the test mode. LMP commands dealing with power control and the request for LMP features (LMP_features_req), and adaptive frequency hopping (LMP_set_AFH, LMP_channel_classification_req and LMP_channel_classification) are allowed in test mode; the normal procedures are also used to test the adaptive power control.

The DUT shall leave the test mode when an LMP_Detach command is received or an LMP_test_control command is received with test scenario set to 'exit test mode'.

When the DUT has entered test mode, the PDU LMP_test_control PDU can be sent to the DUT to start a specific test. This PDU is acknowledged with an LMP_accepted PDU. If a device that is not in test mode receives an LMP_test_control PDU it responds with an LMP_not_accepted PDU, where the error code shall be *PDU not allowed*.

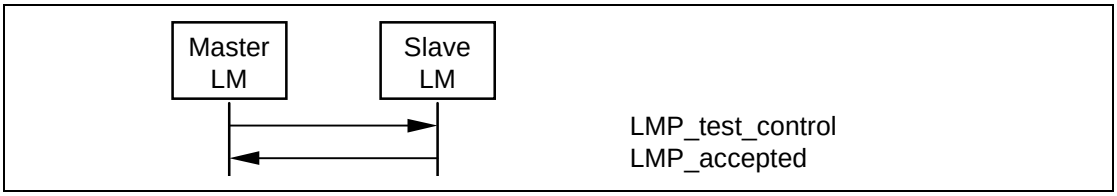

Sequence 101: Control of test mode successful.

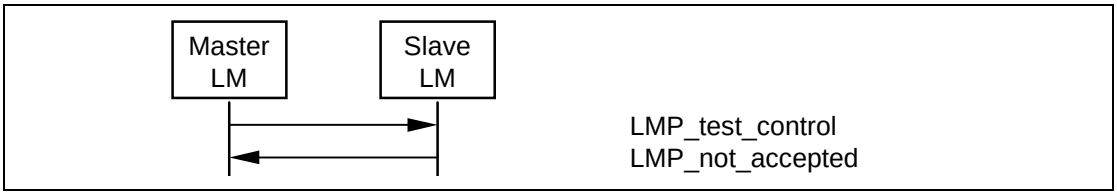

Sequence 102: Control of test mode rejected since slave is not in test mode.

4.7.3 Summary of Test Mode PDUs

Table 4.13 lists all LMP messages used for test mode. To ensure that the contents of LMP_test_control PDU are suitably whitened (important when sent in

transmitter mode), all parameters listed in Table 4.31 on page 304 are XORed with 0x55 before being sent.

LMP PDU	PDU number	Possible Direction	Contents	Position in Payload
LMP_test_activate	56	m → s		
LMP_test_control	57	m → s	test scenario hopping mode TX frequency RX frequency power control mode poll period packet type length of test data	2 3 4 5 6 7 8 9-10
LMP_detach	7	m → s		
LMP_accepted	3	m ← s		
LMP_not_accepted	4	m ← s		

Name	Length (bytes)	Type	Unit	Detailed
Test scenario	1	u_int8		0 Pause Test Mode 1 Transmitter test – 0 pattern 2 Transmitter test – 1 pattern 3 Transmitter test – 1010 pattern 4 Pseudorandom bit sequence 5 Closed Loop Back – ACL packets 6 Closed Loop Back – Synchronous packets 7 ACL Packets without whitening 8 Synchronous Packets without whitening 9 Transmitter test – 1111 0000 pattern 10–254 reserved 255 Exit Test Mode The value is XORed with 0x55.
Hopping mode	1	u_int8		0 RX/TX on single frequency 1 Normal hopping 2 Reserved 3 Reserved 4 Reserved 5–255 reserved The value is XORed with 0x55.
TX frequency (for DUT)	1	u_int8		f = [2402 + k] MHz The value is XORed with 0x55.

Table 4.31: Parameters used in LMP_Test_Control PDU

Name	Length (bytes)	Type	Unit	Detailed
RX frequency (for DUT)	1	u_int8		f = [2402 + k] MHz The value is XORed with 0x55.
Power control mode	1	u_int8		0 fixed TX output power 1 adaptive power control The value is XORed with 0x55.
Poll period	1	u_int8	1.25 ms	The value is XORed with 0x55.
Packet type	1	u_int8		Bits 3-0 numbering as in packet header, see Baseband Specification Bits 7-4 0: ACL/SCO 1: eSCO 2: Enhanced Data Rate ACL 3: Enhanced Data Rate eSCO 4-15: reserved Other values are reserved The value is XORed with 0x55.
length of test sequence (=length of user data in Baseband Specification)	2	u_int16	1 byte	unsigned binary number The value is XORed with 0x5555.

Table 4.31: Parameters used in LMP_Test_Control PDU

The control PDU is used for both transmitter and loop back tests. The following restrictions apply for the parameter settings:

Parameter	**Restrictions Transmitter Test**	**Restrictions Loopback Test**
TX frequency	$0 \leq k \leq 93$	$0 \leq k \leq 78$
RX frequency	same as TX frequency	$0 \leq k \leq 78$
Poll period		not applicable (set to 0)
Length of test sequence	Depends on packet type. See table 6.9 and 6.10 in the Baseband specification	For ACL and SCO packets: not applicable (set to 0) For eSCO packets: [see table 6.10 in the Baseband specification]

5 SUMMARY

5.1 PDU SUMMARY

LMP PDU	Length (bytes)	op code	Packet type	Possible direction	Contents	Position in payload
Escape 1	variable	124	DM1	m ↔ s	extended op code	2
					variable	3-?
Escape 2	variable	125	DM1	m ↔ s	extended op code	2
					variable	3-?
Escape 3	variable	126	DM1	m ↔ s	extended op code	2
					variable	3-?
Escape 4	variable	127	DM1	m ↔ s	extended op code	2
					variable	3-?
LMP_accepted	2	3	DM1/DV	m ↔ s	op code	2
LMP_accepted_ext	4	127/01	DM1	m ↔ s	escape op code	3
					extended op code	4
LMP_au_rand	17	11	DM1	m ↔ s	random number	2-17
LMP_auto_rate	1	35	DM1/DV	m ↔ s	-	
LMP_channel _classification_req	7	127/16	DM1	m → s	AFH_reporting _mode	3
					AFH_min_interval	4-5
					AFH_max_interval	6-7
LMP_channel _classification	12	127/17	DM1	m ← s	AFH_channel_ classification	3 – 12
LMP_clkoffset_req	1	5	DM1/DV	m → s	–	
LMP_clkoffset_res	3	6	DM1/DV	m ← s	clock offset	2–3
LMP_comb_key	17	9	DM1	m ↔ s	random number	2-17
LMP_decr_power _req	2	32	DM1/DV	m ↔ s	for future use	2
LMP_detach	2	7	DM1/DV	m ↔ s	error code	2
LMP_DHkey_ Check	17	65	DM1	m ↔ s	Confirmation Value	2-17

Table 5.1: Coding of the different LM PDUs

LMP PDU	Length (bytes)	op code	Packet type	Possible direction	Contents	Position in payload
LMP_encapsulated_header	4	61	DM1	m ↔ s	encapsulated major type	2
					encapsulated minor type	3
					encapsulated pay-load length	4
LMP_encapsulated_payload	17	62	DM1	m ↔ s	encapsulated data	2-17
LMP_encryption_key_size_mask_req	1	58	DM1	m → s		
LMP_encryption_key_size_mask_res	3	59	DM1	m ← s	key size mask	2-3
LMP_encryption_key_size_req	2	16	DM1/DV	m ↔ s	key size	2
LMP_encryption_mode_req	2	15	DM1/DV	m ↔ s	encryption mode	2
LMP_eSCO_link_req	16	127/12	DM1	m↔s	eSCO handle	3
					eSCO LT_ADDR	4
					timing control flags	5
					D_{eSCO}	6
					T_{eSCO}	7
					W_{eSCO}	8
					eSCO packet type M->S	9
					eSCO packet type S->M	10
					packet length M->S	11-12
					packet length S->M	13-14
					air mode	15
					negotiation state	16
LMP_features_req	9	39	DM1/DV	m ↔ s	features	2-9

Table 5.1: Coding of the different LM PDUs

LMP PDU	Length (bytes)	op code	Packet type	Possible direction	Contents	Position in payload
LMP_features_req_ext	12	127/03	DM1	m ↔ s	features page	3
					max supported page	4
					extended features	5-12
LMP_features_res	9	40	DM1/DV	m ↔ s	features	2-9
LMP_features_res_ext	12	127/04	DM1	m ↔ s	features page	3
					max supported page	4
					extended features	5-12
LMP_host_connection_req	1	51	DM1/DV	m ↔ s	–	
LMP_hold	7	20	DM1/DV	m ↔ s	hold time	2-3
					hold instant	4-7
LMP_hold_req	7	21	DM1/DV	m ↔ s	hold time	2-3
					hold instant	4-7
LMP_incr_power_req	2	31	DM1/DV	m ↔ s	for future use	2
LMP_in_rand	17	8	DM1	m ↔ s	random number	2-17
LMP_IO_Capability_req	5	127/25	DM1	m ↔ s	IO_capabilities	3
					OOB Authentication Data	4
					Authentication_Requirement	5
LMP_IO_Capability_res	5	127/26	DM1	m ↔ s	IO_capabilities	3
					OOB Authentication Data	4
					Authentication_Requirement	5
LMP_pause_encryption_req	2	127/23	DM1	m ↔ s	–	
LMP_resume_encryption_req	2	127/24	DM1	m ← s	–	
LMP_max_power	1	33	DM1/DV	m ↔ s	–	
LMP_max_slot	2	45	DM1/DV	m ↔ s	max slots	2

Table 5.1: Coding of the different LM PDUs

LMP PDU	Length (bytes)	op code	Packet type	Possible direction	Contents	Position in payload
LMP_max_slot_req	2	46	DM1/DV	m ↔ s	max slots	2
LMP_min_power	1	34	DM1/DV	m ↔ s	–	
LMP_modify _beacon	11 or 13	28	DM1	m → s	timing control flags	2
					D_B	3-4
					T_B	5-6
					N_B	7
					Δ_B	8
					D_{access}	9
					T_{access}	10
					$N_{acc\text{-}slots}$	11
					N_{poll}	12
					M_{access}	13:0-3
					access scheme	13:4-7
LMP_name_req	2	1	DM1/DV	m ↔ s	name offset	2
LMP_name_res	17	2	DM1	m ↔ s	name offset	2
					name length	3
					name fragment	4-17
LMP_numeric_ comparison_failed	2	127/27	DM1	m ↔ s	–	
LMP_not_accepted	3	4	DM1/DV	m ↔ s	op code	2
					error code	3
LMP_not_accepted_ ext	5	127/02	DM1	m ↔ s	escape op code	3
					extended op code	4
					error code	5
LMP_packet_type _table_req	3	127/11	DM1	m ↔ s	packet type table	3
LMP_page_mode _req	3	53	DM1/DV	m ↔ s	paging scheme	2
					paging scheme set-tings	3

Table 5.1: Coding of the different LM PDUs

LMP PDU	Length (bytes)	op code	Packet type	Possible direction	Contents	Position in payload
LMP_page_scan_ mode_req	3	54	DM1/DV	m ↔ s	paging scheme	2
					paging scheme set-tings	3
LMP_park_req	17	25	DM1	m ↔ s	timing control flags	2
					D_B	3-4
					T_B	5-6
					N_B	7
					Δ_B	8
					PM_ADDR	9
					AR_ADDR	10
					N_{Bsleep}	11
					D_{Bsleep}	12
					D_{access}	13
					T_{access}	14
					$N_{acc-slots}$	15
					N_{poll}	16
					M_{access}	170-3
					access scheme	v
LMP_passkey_ failed	2	127/28	DM1	m ↔ s	–	
LMP_oob _failed	2	127/29	DM1	m ↔ s		
LMP_keypress _notification	3	127/30	DM1	m ↔ s	Notification Type	2
LMP_preferred_rate	2	36	DM1/DV	m ↔ s	data rate	2
LMP_quality_of _service	4	41	DM1/DV	m → s	poll interval	2-3
					N_{BC}	4
LMP_quality_o f_service_req	4	42	DM1/DV	m ↔ s	poll interval	2-3
					N_{BC}	4

Table 5.1: Coding of the different LM PDUs

LMP PDU	Length (bytes)	op code	Packet type	Possible direction	Contents	Position in payload
LMP_remove_eSCO_link_req see Note 4 on page 316	4	127/ 13	DM1	m↔s	eSCO handle	3
					error code	4
LMP_remove_SCO_link_req	3	44	DM1/DV	m ↔ s	SCO handle	2
					error code	3
LMP_SCO_link_req	7	43	DM1/DV	m ↔ s	SCO handle	2
					timing control flags	3
					D_{sco}	4
					T_{sco}	5
					SCO packet	6
					air mode	7
LMP_set_AFH	16	60	DM1	m → s	AFH_instant	2-5
					AFH_mode	6
					AFH_channel_map	7-16
LMP_set_broadcast_scan_window	4 or 6	27	DM1	m → s	timing control flags	2
					D_B	3-4
					broadcast scan window	5-6
LMP_setup_complete	1	49	DM1	m ↔ s	-	
LMP_Simple_Pairing_Confirm	17	63	DM1	m ↔ s	Commitment Value	2-17
LMP_Simple_Pairing_Number	17	64	DM1	m ↔ s	Nonce Value	2-17
LMP_slot_offset	9	52	DM1/DV	m ↔ s	slot offset	2-3
					BD_ADDR	4-9
LMP_sniff_req	10	23	DM1	m ↔ s	timing control flags	2
					D_{sniff}	3-4
					T_{sniff}	5-6
					sniff attempt	7-8
					sniff timeout	9-10

Table 5.1: Coding of the different LM PDUs

LMP PDU	Length (bytes)	op code	Packet type	Possible direction	Contents	Position in payload
LMP_sres	5	12	DM1/DV	m ↔ s	authentication response	2-5
LMP_start _encryption_req	17	17	DM1	m → s	random number	2-17
LMP_stop _encryption_req	1	18	DM1/DV	m → s	–	
LMP_supervision _timeout	3	55	DM1/DV	m →s	supervision timeout	2-3
LMP_switch_req	5	19	DM1/DV	m ↔ s	switch instant	2-5
LMP_temp_rand	17	13	DM1	m → s	random number	2-17
LMP_temp_key	17	14	DM1	m → s	key	2-17
LMP_test_activate	1	56	DM1/DV	m → s	–	
LMP_test_control	10	57	DM1	m → s	test scenario	2
					hopping mode	3
					TX frequency	4
					RX frequency	5
					power control mode	6
					poll period	7
					packet type	8
					length of test data	9-10
LMP_timing _accuracy_req	1	47	DM1/DV	m ↔ s	–	
LMP_timing _accuracy_res	3	48	DM1/DV	m ↔ s	drift	2
					jitter	3
LMP_unit_key	17	10	DM1	m ↔ s	key	2-17

Table 5.1: Coding of the different LM PDUs

LMP PDU	Length (bytes)	op code	Packet type	Possible direction	Contents	Position in payload
LMP_unpark_BD_ADDR_req	variable	29	DM1	m → s	timing control flags	2
					D_B	3-4
					LT_ADDR 1st unpark	5:0-2
					LT_ADDR 2nd unpark	5:4-6
					BD_ADDR 1st unpark	6-11
					BD_ADDR 2nd unpark	12-17

Table 5.1: Coding of the different LM PDUs

LMP PDU	Length (bytes)	op code	Packet type	Possible direction	Contents	Position in payload
LMP_unpark_PM_ADDR_req	variable	30	DM1	m → s	timing control flags	2
					D_B	3-4
					LT_ADDR 1st unpark	5:0-3
					LT_ADDR 2nd unpark	5:4-7
					PM_ADDR 1st unpark	6
					PM_ADDR 2nd unpark	7
					LT_ADDR 3rd unpark	8:0-3
					LT_ADDR 4th unpark	8:4-7
					PM_ADDR 3rd unpark	9
					PM_ADDR 4th unpark	10
					LT_ADDR 5th unpark	11:0-3
					LT_ADDR 6th unpark	11:4-7
					PM_ADDR 6th unpark	12
					PM_ADDR 6th unpark	13
					LT_ADDR 7th unpark	14:0-3
					PM_ADDR 7th unpark	15
LMP_unsniff_req	1	24	DM1/DV	m ↔ s	-	
LMP_use_semi_permanent_key	1	50	DM1/DV	m → s	-	
LMP_version_req	6	37	DM1/DV	m ↔ s	VersNr	2
					CompId	3-4
					SubVersNr	5-6

Table 5.1: Coding of the different LM PDUs

LMP PDU	Length (bytes)	op code	Packet type	Possible direction	Contents	Position in payload
LMP_version_res	6	38	DM1/DV	m ↔ s	VersNr	2
					CompId	3-4
					SubVersNr	5-6
LMP_sniff_ subrating_req	9	127/21	DM1	m ↔ s	max_sniff_subrate	3
					min_sniff_mode_ timeout	4-5
					sniff_subrating_inst ant	6-9
LMP_sniff_ subrating_res	9	127/22	DM1	m ↔ s	max_sniff_subrate	3
					min_sniff_mode_ timeout	4-5
					sniff_subrating_ instant	6-9
LMP_power_ control_req	3	127/31	DM1/DV	m ↔ s	power_adjustment_ request	3
LMP_power_ control_res	3	127/32	DM1/DV	m ↔ s	power_adjustment_ response	3

Table 5.1: Coding of the different LM PDUs

Note1: For LMP_set_broadcast_scan_window, LMP_modify_beacon, LMP_unpark_BD_ADDR_req and LMP_unpark_PM_ADDR_req the parameter D_B is optional. This parameter is only present if bit0 of *timing control flags* is 1. If the parameter is not included, the position in payload for all parameters following D_B are decreased by 2.

Note2: For LMP_unpark_BD_ADDR the LT_ADDR and the BD_ADDR of the 2nd unparked slave are optional. If only one slave is unparked *LT_ADDR 2nd unpark* shall be zero and *BD_ADDR 2nd unpark* is left out.

Note3: For LMP_unpark_PM_ADDR the LT_ADDR and the PM_ADDR of the 2nd – 7th unparked slaves are optional. If N slaves are unparked, the fields up to and including the Nth unparked slave are present. If N is odd, the *LT_ADDR $(N+1)^{th}$ unpark* shall be zero. The length of the message is x + 3N/2 if N is even and x + 3(N+1)/2 -1 if N is odd, where x = 2 or 4 depending on if the D_B is incluDed Or Not (See Note1).

Note4: Parameters coincide with their namesakes in LMP_<remove>_SCO_link_req apart from the following:

1. eSCO_LT_ADDR - the eSCO connection will be active on an additional LT_ADDR that needs to be defined. The master is allowed to re-assign an active eSCO link to a different LT_ADDR.
2. D_{eSCO}, T_{eSCO} - as per LMP_SCO_link_req but with a greater flexibility in values (e.g. no longer fixed with respect to HV1, HV2, and HV3 packet choice).
3. W_{eSCO} - the eSCO retransmission window size (in slots)
4. packet type and packet length may be prescribed differently in Master-to-Slave or Slave-to-Master directions for asynchronous eSCO links
5. packet length (in bytes) - eSCO packet types no longer have fixed length
6. negotiation state – this is used to better enable the negotiation of the negotiable parameters: D_{eSCO}, T_{eSCO}, W_{eSCO}, eSCO packet type M->S, eSCO packet type S->M, packet length M->S, packet length S->M. When responding to an eSCO link request with a new suggestion for these parameters, this flag may be set to 1 to indicate that the last received negotiable parameters are possible, but the new parameters specified in the response eSCO link request would be preferable, to 2 to indicate that the last received negotiable parameters are not possible as they cause a reserved slot violation or to 3 to indicate that the last received negotiable parameters would cause a latency violation. The flag shall be set to zero in the initiating LMP_eSCO_link_req.

5.2 PARAMETER DEFINITIONS

Name	Length (bytes)	Type	Unit	Detailed	Mandatory range
access scheme	1	u_int4		0: polling technique 1-15: Reserved	

Table 5.2: Parameters in LM PDUs.

Name	Length (bytes)	Type	Unit	Detailed	Mandatory range
AFH_channel_classification	10	multiple bytes	-	This parameter contains 40 2-bit fields. The nth (numbering from 0) such field defines the classification of channels *2n* and *2n+1*, other than the 39th field which just contains the classification of channel 78. Each field interpreted as an integer whose values indicate: 0 = unknown 1 = good 2 = reserved 3 = bad	
AFH_channel_map	10	multiple bytes	-	If *AFH_mode* is *AFH_enabled*, this parameter contains 79 1-bit fields, otherwise the contents are reserved. The nth (numbering from 0) such field (in the range 0 to 78) contains the value for channel *n*. Bit 79 is reserved (set to 0 when transmitted and ignored when received) The 1-bit field is interpreted as follows: 0: channel *n* is unused 1: channel *n* is used	
AFH_instant	4	u_int32	slots	Bits 27:1 of the Bluetooth master clock value at the time of switching hop sequences. Shall be even.	
AFH_max_interval	2	u_int16	slots	Range is 0x0640 to 0xBB80 slots (1 to 30s)	
AFH_min_interval	2	u_int16	slots	Range is 0x0640 to 0xBB80 slots (1 to 30s)	
AFH_mode	1	u_int8	-	0: AFH_disabled 1: AFH_enabled 2-255: Reserved	

Table 5.2: Parameters in LM PDUs.

Name	Length (bytes)	Type	Unit	Detailed	Mandatory range
AFH_reporting_mode	1	u_int8	-	0: AFH_reporting_disabled 1: AFH_reporting_enabled 2-255: reserved	
air mode	1	u_int8		0: μ-law log 1: A-law log 2: CVSD 3: transparent data 4-255: Reserved	See Table 5.3 on page 328
AR_ADDR	1	u_int8			
Authentication_Requirements	1	u_int8		0x00:MITM Protection Not Required – No Bonding 0x01: MITM Protection Required – No Bonding 0x02: MITM Protection Not Required – Dedicated Bonding 0x03: MITM Protection Required – Dedicated Bonding 0x04: MITM Protection Not Required – General Bonding 0x05: MITM Protection Required – General Bonding 0x06 to 0xFF– Reserved	
authentication response	4	multiple bytes			
BD_ADDR	6	multiple bytes		BD_ADDR of the sending device	
broadcast scan window	2	u_int16	slots		
clock offset	2	u_int16	1.25ms	($CLKN_{16-2}$ slave - $CLKN_{16-2}$ master) mod 2^{15} MSbit of second byte not used.	
CompId	2	u_int16		see Bluetooth Assigned Numbers)	

Table 5.2: Parameters in LM PDUs.

Name	Length (bytes)	Type	Unit	Detailed	Mandatory range
Commitment value	16	Multiple bytes		Little Endian format	
Confirmation value	16	Multiple bytes		Little Endian format	
D_{access}	1	u_int8	slots		
data rate	1	u_int8		When in Basic Rate mode: bit0 = 0: use FEC bit0 = 1: do not use FEC bit1-2=0: No packet-size preference available bit1-2=1: use 1-slot packets bit1-2=2: use 3-slot packets bit1-2=3: use 5-slot packets When in Enhanced Data Rate mode: bit3-4=0: use DM1 packets bit3-4=1: use 2 Mbps packets bit3-4=2: use 3 Mbps packets bit3-4=3: reserved bit5-6=0: No packet-size preference available bit5-6=1: use 1-slot packets bit5-6=2: use 3-slot packets bit5-6=3: use 5-slot packets bit7: Reserved - shall be zero	
D_B	2	u_int16	slots		
Δ_B	1	u_int8	slots		
D_{Bsleep}	1	u_int8			
D_{eSCO}	1	u_int8	slots	Valid range is 0 - 254 slots	See Table 5.3 on page 328

Table 5.2: Parameters in LM PDUs.

Name	Length (bytes)	Type	Unit	Detailed	Mandatory range
drift	1	u_int8	ppm		
D_{sco}	1	u_int8	slots	Only even values are valid[1]	0 to T_{sco} -2
D_{sniff}	2	u_int16	slots	Only even values are valid[1]	0 to (T_{sniff} - 2)
encapsulated data	16	Multiple bytes		MSBs zero padded when data is less than 16 bytes. Little Endian format	
encapsulated major type	1	u_int8		See Table 5.3, “LMP encapsulated,” on page 328	
encapsulated minor type	1	u_int8		See Table 5.3, “LMP encapsulated,” on page 328	
encapsulated payload length	1	u_int8		See Table 5.3, “LMP encapsulated,” on page 328	
encryption mode	1	u_int8		0: no encryption 1: encryption 2: encryption 3 -255: Reserved	
error code	1	u_int8		See Section Part D on page 335	
escape op code	1	u_int8		Identifies which escape op code is being acknowl-edged: range 124-127	
eSCO handle	1	u_int8			
eSCO LT_ADDR	1	u_int8		Logical transport address for the eSCO logical trans-port. The range is extended to 8 bits com-pared with the normal LT_ADDR field: range 0-7.	0 - 7

Table 5.2: Parameters in LM PDUs.

Name	Length (bytes)	Type	Unit	Detailed	Mandatory range
eSCO packet type	1	u_int8		0x00: NULL/POLL 0x07: EV3 0x0C: EV4 0x0D: EV5 0x26: 2-EV3 0x2C: 2-EV5 0x37: 3-EV3 0x3D: 3-EV5 Other values are reserved	If the value is 0x00 the POLL packet shall be used by the master, the NULL packet shall be used by the slave. See Table 5.3 on page 328
extended features	8	multiple bytes		One page of extended features	
extended op code	1	u_int8		Which extended op code is being acknowledged	
features	8	multiple bytes		See Table 3.2 on page 222	
features page	1	u_int8		Identifies which page of extended features is being requested. 0 means standard features 1-255 other feature pages	
hold instant	4	u_int32	slots	Bits 27:1 of the master Bluetooth clock value	
hold time	2	u_int16	slots	Only even values are valid[1]	0x0014 to 0x8000; shall not exceed (supervisionTO * 0.999)
IO_ Capabilities	1	u_int8		0: Display only 1: Display YesNo 2: KeyboardOnly 3: NoInputNoOutput 4-255: reserved	
jitter	1	u_int8	µs		
key	16	multiple bytes			
key size	1	u_int8	byte		

Table 5.2: Parameters in LM PDUs.

Name	Length (bytes)	Type	Unit	Detailed	Mandatory range
key size mask	2	u_int16		Bit mask of supported broadcast encryption key sizes: least significant bit is support for length 1, and so on. The bit shall be one if the key size is supported.	
LT_ADDR	1	u_int4			
M_{access}	1	u_int4		number of access windows	
max slots	1	u_int8	slots		
max_sniff_subrate	1	u_int8	sub-rate		1-255
min_sniff_mode_timeout	2	u_int16	slots		0x0000 to 0xFFFE (even)
max supported page	1	u_int8		Highest page of extended features which contains a non-zero bit for the originating device. Range 0-255	
$N_{acc-slots}$	1	u_int8	slots		
name fragment	14	multiple bytes		UTF-8 characters.	
name length	1	u_int8	bytes		
name offset	1	u_int8	bytes		
N_B	1	u_int8			
N_{BC}	1	u_int8			
N_{Bsleep}	1	u_int8			

Table 5.2: Parameters in LM PDUs.

Name	Length (bytes)	Type	Unit	Detailed	Mandatory range
negotiation state	1	u_int8		0: Initiate negotiation 1: the latest received set of negotiable parameters were possible but these parameters are preferred. 2: the latest received set of negotiable parameters would cause a reserved slot violation. 3: the latest received set of negotiable parameters would cause a latency violation. 4: the latest received set of of negotiable parameters are not supported. Other values are reserved	
N_{poll}	1	u_int8			
Nonce Value	16	Muliti-ple bytes		Little Endian Format	
Notification Value	1	U_int8		0=passkey entry started 1=passkey digit entered 2=passkey digit erased 3=passkey cleared 4=passkey entry completed 5-255: reserved	
OOB Authentication Data	1	u_int8		0: No OOB Authentication Data received 1: OOB Authentication Data received 2-255: reserved	
op code	1	u_int8			

Table 5.2: Parameters in LM PDUs.

Name	Length (bytes)	Type	Unit	Detailed	Mandatory range
packet length	2	uint16	bytes	Length of the eSCO payload 0 for POLL/NULL 1-30 for EV3 1-120 for EV4 1-180 for EV5 1-60 for 2-EV3 1-360 for 2-EV5 1-90 for 3-EV3 1-540 for 3-EV5 Other values are invalid	See Table 5.3 on page 328
packet type table	1	u_int8		0: 1Mbps only 1: 2/3 Mbps 2-255: reserved	0-1
paging scheme	1	u_int8		0: mandatory scheme 1-255: Reserved	
paging scheme settings	1	u_int8		For mandatory scheme: 0: R0 1: R1 2: R2 3-255: Reserved	
PM_ADDR	1	u_int8			
poll interval	2	u_int16	slots	Only even values are valid[1]	0x0006 to 0x1000
power_ adjustment_ request	1	u_int8		0: decrement power one step 1: increment power one step 2: increase to maximum power 3-255: reserved for future use	
power_ adjustment_ response	1	u_int8		bit0-1: GFSK bit2-3: DQPSK bit4-5: 8DPSK bit6-7: reserved Each 2-bit value is defined as follows 0: not supported 1: changed one step, (not min or max) 2: max power 3: min power	

Table 5.2: Parameters in LM PDUs.

Name	Length (bytes)	Type	Unit	Detailed	Mandatory range
random number	16	multiple bytes			
reserved(n)	n	u_int8		Reserved for future use – shall be 0 when transmitted, ignore value when received	
SCO handle	1	u_int8			
SCO packet	1	u_int8		0: HV1 1: HV2 2: HV3 3-255: Reserved	
slot offset	2	u_int16	µs	0 ≤ slot offset < 1250	
sniff attempt	2	u_int16	received slots	Number of receive slots	1 to $T_{sniff}/2$
sniff_subrating_instant	4	u_int32	slots	Bits 27:1 of the master Bluetooth clock value	
sniff timeout	2	u_int16	received slots	Number of receive slots	0 to 0x0028
SubVersNr	2	u_int16		Defined by each company	
supervision timeout	2	u_int16	slots	0 means an infinite timeout	0 and 0x0190 to 0xFFFF
switch instant	4	u_int32	slots	Bits 27:1 of the master Bluetooth clock value	
T_{access}	1	u_int8	slots		
T_B	2	u_int16	slots		
T_{eSCO}	1	u_int8	slots	Valid range is 4 – 254 slots	See Table 5.3 on page 328
timing control flags	1	u_int8		bit0 = 0: o timing change bit0 = 1: timing change bit1 = 0: use initialization 1 bit1 = 1: use initialization 2 bit2 = 0: access window bit2 = 1: no access window bit3-7: Reserved	
T_{sco}	1	u_int8	slots	Only even values are valid[1]	2 and 6

Table 5.2: Parameters in LM PDUs.

Name	Length (bytes)	Type	Unit	Detailed	Mandatory range
T_{sniff}	2	u_int16	slots	Only even values are valid[1]	0x0006 to 0x0540; shall not exceed (supervi-sionTO * 0.999)
VersNr	1	u_int8		See Bluetooth Assigned Numbers	
W_{eSCO}	1	u_int8	slots	Number of slots in the retransmission window Valid range is 0 – 254 slots	See Table 5.3 on page 328

Table 5.2: Parameters in LM PDUs.

1. If a device receives an LMP PDU with an odd value in this parameter field the PDU should be rejected with an error code of *invalid LMP parameters*.

5.3 LMP ENCAPSULATED

Name	Major Type	Minor Type	Payload Length	Detailed
P-192 Public Key	1	1	48	X, Y format Bytes 23-0: X co-ordinate Bytes 47-24: Y co-ordinate Little Endian Format

Table 5.3: LMP encapsulated

	Single Slot Packets	3-Slot Packets
D_{eSCO}	0 to **T_{eSCO}**-2 (even)	0 to **T_{eSCO}**-2 (even)
T_{eSCO}	EV3: 6 2-EV3: 6-12 (even) 3-EV3: 6-18 (even)	EV4: 16 EV5: 16 2-EV5: 16 3-EV5: 16
W_{eSCO}	0, 2, and 4	0 and 6
packet length M->S	10*T_{eSCO} /2	10*T_{eSCO} /2
packet length S->M	10*T_{eSCO} /2	10*T_{eSCO} /2
air mode	At least one of A-law, mu-law, CVSD, transparent	transparent

Table 5.4: Mandatory parameter ranges for eSCO packet types

5.4 DEFAULT VALUES

Devices shall use these values before anything else has been negotiated:

Parameter	Value
AFH_mode	AFH_disabled
AFH_reporting_mode	AFH_reporting_disabled
drift	250
jitter	10
max slots	1
poll interval	40

Table 5.5: Device default values

6 LIST OF FIGURES

Figure 1.1: Link Manager Protocol signaling layer. 209
Figure 2.1: Transmission of a message from master to slave. 211
Figure 2.2: Payload body when LMP PDUs are sent. 212
Figure 2.3: Symbols used in sequence diagrams. 214
Figure 4.1: Connection establishment. 225
Sequence 1: Connection closed by sending LMP_detach. 227
Sequence 2: A device requests a change of the other device's TX power. 228
Sequence 3: The TX power cannot be increased. 228
Sequence 4: The TX power cannot be decreased. 228
Sequence 5: A device responds to a power control request. 230
Sequence 6: Master Enables AFH. 232
Sequence 7: Master disables AFH. 232
Sequence 8: Master Updates AFH. 233
Sequence 9: Channel classification reporting. 235
Sequence 10: Setting the link supervision timeout. 236
Sequence 11: A notifies B to enable CQDDR 237
Sequence 12: B sends A a preferred packet type 237
Sequence 13: Master notifies slave of quality of service. 238
Sequence 14: Device accepts new quality of service 239
Sequence 15: Device rejects new quality of service. 239
Sequence 16: Negotiation for page mode. 240
Sequence 17: Negotiation for page scan mode 240
Sequence 18: Device allows Remote Device to use a maximum number of slots. 241
Sequence 19: Device requests a maximum number of slots. Remote Device accepts. 241
Sequence 20: Device requests a maximum number of slots. Remote Device rejects. 241
Sequence 21: Packet type table change is rejected. 242
Sequence 22: Packet type table change is accepted. 243
Sequence 23: Sending an encapsulated PDU 244
Sequence 24: Authentication. Claimant has link key. 245
Sequence 25: Authentication fails. Claimant has no link key. 245
Sequence 26: Pairing accepted. Responder has a variable PIN. Initiator has a variable or fixed PIN. 247
Sequence 27: Responder has a fixed PIN and initiator has a variable PIN. 247
Sequence 28: Both devices have a fixed PIN. 247
Sequence 29: Responder rejects pairing. 248
Sequence 30: Creation of the link key. 249

Sequence 31: Successful change of the link key 249
Sequence 32: Change of the link key not possible since the other device uses a unit key. 249
Sequence 33: Change to a temporary link key 251
Sequence 34: Link key changed to the semi-permanent link key 251
Sequence 35: Negotiation for encryption mode 253
Sequence 36: Encryption key size negotiation successful 254
Sequence 37: Encryption key size negotiation failed 254
Sequence 38: Start of encryption 254
Sequence 39: Stop of encryption 255
Sequence 40: Master-initiated pausing of encryption 256
Sequence 41: Slave-initiated pausing of encryption 256
Sequence 42: Initiating Master LM resumes encryption 257
Sequence 43: Initiating Slave LM resumes encryption 257
Sequence 44: Request for supported encryption key sizes. 259
Sequence 45: IO Capability Exchange 260
Sequence 46: IO Capability exchange with transaction Collision (master transmitting LMP_io_capability_req first) and resolution 261
Sequence 47: IO Capability exchange with transaction Collision (slave transmitting LMP_io_capability_req first) and resolution 261
Sequence 48: Public key exchange 262
Sequence 49: Numeric Comparison Authentication: Commitment check success 263
Sequence 50: Numeric Comparison Authentication: Commitment check failure 264
Sequence 51: Authentication stage 1 Numeric Comparison Failure on Initiator Side 264
Sequence 52: Authentication stage 1: Numeric Comparison Failure on Responder Side 265
Sequence 53: Authentication Passkey entry 266
Sequence 54: Authentication Passkey Entry: Commitment check failure on the Responder side 266
Sequence 55: Authentication Passkey Entry: Commitment check failure on the Initiator side 267
Sequence 56: Authentication stage 1 Passkey Entry Failure on Initiator Side 267
Sequence 57: Authentication Stage 1 Passkey Entry Failure on Responding Side 268
Sequence 58: Keypress Notifications 268
Sequence 59: Authentication OOB: Only one device is OOB-r capable 269
Sequence 60: Authentication stage 1 OOB: Commitment check failure on the Responder side 270
Sequence 61: Authentication stage 1 OOB: Commitment check failure on the Initiator side 270

Sequence 62: Authentication stage 1 OOB: OOB information not available on the Initiator side 271
Sequence 63: DHKey check 271
Sequence 64: DHKey check: Check failure on the Responder side DHKey check: Check failure on the Responder 272
Sequence 65: DHKey check: check failure on the Initiator side 272
Sequence 66: The requested device supports timing accuracy information. 273
Sequence 67: The requested device does not support timing accuracy information. 273
Sequence 68: Clock offset requested. 274
Sequence 69: Request for LMP version. 275
Sequence 70: Request for supported features. 276
Sequence 71: Request for extended features. 276
Sequence 72: Device’s name requested and it responses. 277
Figure 4.2: Slot offset for role switch 278
Sequence 73: Slot offset information is sent 278
Sequence 74: Role switch (slave initiated). 280
Sequence 75: Role switch (master initiated). 280
Sequence 76: Master forces slave into hold mode 282
Sequence 77: Slave forces master into hold mode 282
Sequence 78: Negotiation for hold mode 283
Sequence 79: Slave accepts to enter park state. 287
Sequence 80: Slave rejects to enter into park state 287
Sequence 81: Slave requests to enter park state and accepts master's beacon parameters 288
Sequence 82: Master rejects slave's request to enter park state 288
Sequence 83: Slave requests to enter park state, but rejects master's beacon parameters 288
Sequence 84: Master notifies all slaves of increase in broadcast capacity 288
Sequence 85: Master modifies beacon parameters 289
Sequence 86: Master unparks slaves addressed with their BD_ADDR 289
Sequence 87: Master unparks slaves addressed with their PM_ADDR 290
Sequence 88: Negotiation for sniff mode 291
Sequence 89: Slave moved from sniff mode to active mode 292
Sequence 90: LM accepts sniff subrating request 293
Sequence 91: Master requests an SCO link 295
Sequence 92: Master rejects slave’s request for an SCO link 295
Sequence 93: Master accepts slave’s request for an SCO link 296
Sequence 94: SCO link removed 297
Sequence 95: Master requests an eSCO link 298
Sequence 96: Slave requests an eSCO link. 299

Sequence 97: Master rejects slave's request for an eSCO link. 299
Sequence 98: eSCO link removed 300
Sequence 99: Activation of test mode successful. 302
Sequence 100: Activation of test mode fails. Slave is not allowed to enter test mode. 302
Sequence 101: Control of test mode successful. 303
Sequence 102: Control of test mode rejected since slave is not in test mode. 303

7 LIST OF TABLES

Table 2.1: General response messages. 215
Table 3.1: Feature Definitions 216
Table 3.2: Feature mask definitions (page 0) 222
Table 3.3: Extended feature mask definition (page 1) 224
Table 4.1: Connection establishment PDU 226
Table 4.2: Detach PDU 226
Table 4.3: Legacy Power control PDU 227
Table 4.4: Enhanced Power control PDU 227
Table 4.5: AFH PDU 231
Table 4.6: Set supervision timeout PDU 236
Table 4.7: Quality-driven change of the data rate PDU 237
Table 4.8: Quality of Service PDU 238
Table 4.9: Paging scheme request PDU 240
Table 4.10: Multi-slot packet control PDU 241
Table 4.11: Enhanced Data Rate PDUs 242
Table 4.12: Encapsulated LMP PDUs 243
Table 4.13: Authentication PDUs 245
Table 4.14: Pairing PDUs 246
Table 4.15: Change link key PDU 249
Table 4.16: Change current link key PDU 250
Table 4.17: Encryption handling PDU 252
Table 4.18: Encryption key size request PDU 259
Table 4.19: Request limited timing PDU 273
Table 4.20: PDUs used for clock offset request. 274
Table 4.21: PDUs used for LMP version request. 275
Table 4.22: PDUs used for features request. 276
Table 4.23: Name request PDUs 277
Table 4.24: Role switch PDU 278
Table 4.25: Role switch PDU 279
Table 4.26: Hold mode PDUs 281
Table 4.27: PDUs used for park state 285
Table 4.28: Sniff mode PDUs 290
Table 4.29: SCO link management PDUs 294
Table 4.30: PDUs used for managing the eSCO links 297
Table 4.31: Parameters used in LMP_Test_Control PDU 304
Table 5.1: Coding of the different LM PDUs 307
Table 5.2: Parameters in LM PDUs. 317
Table 5.3: LMP encapsulated 328
Table 5.4: Mandatory parameter ranges for eSCO packet types 328
Table 5.5: Device default values 329

ERROR CODES

CONTENTS

1 Overview of Error Codes 339
1.1 Usage Descriptions 339
1.2 HCI Command Errors 339
1.3 List of Error Codes 340
2 Error Code Descriptions 342
2.1 Unknown HCI Command (0X01) 342
2.2 Unknown Connection Identifier (0X02) 342
2.3 Hardware Failure (0X03) 342
2.4 Page Timeout (0X04) 342
2.5 Authentication Failure (0X05) 342
2.6 PIN or key Missing (0X06) 342
2.7 Memory Capacity Exceeded (0X07) 342
2.8 Connection Timeout (0X08) 343
2.9 Connection Limit Exceeded (0X09) 343
2.10 Synchronous Connection Limit to a Device Exceeded (0X0A) 343
2.11 ACL Connection Already Exists (0X0B) 343
2.12 Command Disallowed (0X0C) 343
2.13 Connection Rejected due to Limited Resources (0X0D) 343
2.14 Connection Rejected due to Security Reasons (0X0E) 343
2.15 Connection Rejected due to Unacceptable BD_ADDR (0X0F) 344
2.16 Connection Accept Timeout Exceeded (0X10) 344
2.17 Unsupported Feature or Parameter Value (0X11) 344
2.18 Invalid HCI Command Parameters (0X12) 344
2.19 Remote User Terminated Connection (0X13) 344
2.20 Remote Device Terminated Connection due to Low Resources (0X14) 345
2.21 Remote Device Terminated Connection due to Power Off (0X15) 345
2.22 Connection Terminated by Local Host (0X16) 345
2.23 Repeated Attempts (0X17) 345
2.24 Pairing not Allowed (0X18) 345
2.25 Unknown LMP PDU (0X19) 345
2.26 Unsupported Remote Feature / Unsupported LMP Feature (0X1A) 345
2.27 SCO Offset Rejected (0X1B) 345
2.28 SCO Interval Rejected (0X1C) 346
2.29 SCO Air Mode Rejected (0X1D) 346
2.30 Invalid LMP Parameters (0X1E) 346
2.31 Unspecified Error (0X1F) 346
2.32 Unsupported LMP Parameter Value (0X20) 346

2.33 Role Change Not Allowed (0X21) 346
2.34 LMP Response Timeout (0X22) 346
2.35 LMP Error Transaction Collision (0X23) 347
2.36 LMP PDU Not Allowed (0X24) 347
2.37 Encryption Mode Not Acceptable (0X25) 347
2.38 Link Key Can Not be Changed (0X26) 347
2.39 Requested QoS Not Supported (0X27) 347
2.40 Instant Passed (0X28) 347
2.41 Pairing with Unit Key Not Supported (0X29) 347
2.42 Different Transaction Collision (0x2A) 347
2.43 QoS Unacceptable Parameter (0X2C) 347
2.44 QoS Rejected (0X2D) 348
2.45 Channel Assessment Not Supported (0X2E) 348
2.46 Insufficient Security (0X2F) 348
2.47 Parameter out of Mandatory Range (0X30) 348
2.48 Role Switch Pending (0X32) 348
2.49 Reserved Slot Violation (0X34) 348
2.50 Role Switch Failed (0X35) 348
2.51 Extended Inquiry Response Too Large (0x36) 348
2.52 Simple Pairing Not Supported By Host (0X37) 349
2.53 Host Busy–Pairing(0X38) 349
2.54 Connection Rejected Due To No Suitable Channel Found (0X39) 349
2.55 Controller Busy (0X3A) 349

1 OVERVIEW OF ERROR CODES

This document lists the various possible error codes. When a command fails, or an LMP or AMP message needs to indicate a failure, error codes are used to indicate the reason for the error. Error codes have a size of one octet.

1.1 USAGE DESCRIPTIONS

The purpose of this section is to give descriptions of how the error codes should be used. It is beyond the scope of this document to give detailed descriptions of all situations where error codes can be used, especially as this is implementation dependent.

1.2 HCI COMMAND ERRORS

If an HCI Command that should generate an HCI_Command_Complete event generates an error then this error shall be reported in the HCI_Command_Complete event.

If an HCI Command that sent an HCI_Command_Status with the error code ‘Success’ to the host before processing may find an error during execution then the error may be reported in the normal completion command for the original command or in an HCI_Command_Status event.

Some HCI Commands may generate errors that need to be reported to be host, but there is insufficient information to determine how the command would normally be processed. In this case, two events can be used to indicate this to the host, the HCI_Command_Complete event and HCI_Command_Status events. Which of the two events is used is implementation-dependent.

1.3 LIST OF ERROR CODES

The error code of 0x00 means Success. The possible range of failure error codes is 0x01-0xFF. Section 2 provides an error code usage description for each failure error code.

Values marked as "Reserved for Future Use", can be used in future versions of the specification. A host shall consider any error code that it does not explicitly understand equivalent to the "Unspecified Error (0x1F)."

Error Code	Name
0x00	Success
0x01	Unknown HCI Command
0x02	Unknown Connection Identifier
0x03	Hardware Failure
0x04	Page Timeout
0x05	Authentication Failure
0x06	PIN or Key Missing
0x07	Memory Capacity Exceeded
0x08	Connection Timeout
0x09	Connection Limit Exceeded
0x0A	Synchronous Connection Limit To A Device Exceeded
0x0B	ACL Connection Already Exists
0x0C	Command Disallowed
0x0D	Connection Rejected due to Limited Resources
0x0E	Connection Rejected Due To Security Reasons
0x0F	Connection Rejected due to Unacceptable BD_ADDR
0x10	Connection Accept Timeout Exceeded
0x11	Unsupported Feature or Parameter Value
0x12	Invalid HCI Command Parameters
0x13	Remote User Terminated Connection
0x14	Remote Device Terminated Connection due to Low Resources
0x15	Remote Device Terminated Connection due to Power Off
0x16	Connection Terminated By Local Host
0x17	Repeated Attempts
0x18	Pairing Not Allowed
0x19	Unknown LMP PDU
0x1A	Unsupported Remote Feature / Unsupported LMP Feature
0x1B	SCO Offset Rejected

Table 1.1: List of Possible Error Codes

Error Code	Name
0x1C	SCO Interval Rejected
0x1D	SCO Air Mode Rejected
0x1E	Invalid LMP Parameters
0x1F	Unspecified Error
0x20	Unsupported LMP Parameter Value
0x21	Role Change Not Allowed
0x22	LMP Response Timeout
0x23	LMP Error Transaction Collision
0x24	LMP PDU Not Allowed
0x25	Encryption Mode Not Acceptable
0x26	Link Key Can Not be Changed
0x27	Requested QoS Not Supported
0x28	Instant Passed
0x29	Pairing With Unit Key Not Supported
0x2A	Different Transaction Collision
0x2B	Reserved
0x2C	QoS Unacceptable Parameter
0x2D	QoS Rejected
0x2E	Channel Classification Not Supported
0x2F	Insufficient Security
0x30	Parameter Out Of Mandatory Range
0x31	Reserved
0x32	Role Switch Pending
0x33	Reserved
0x34	Reserved Slot Violation
0x35	Role Switch Failed
0x36	Extended Inquiry Response Too Large
0x37	Secure Simple Pairing Not Supported By Host.
0x38	Host Busy - Pairing
0x39	Connection Rejected due to No Suitable Channel Found

Table 1.1: List of Possible Error Codes

2 ERROR CODE DESCRIPTIONS

2.1 UNKNOWN HCI COMMAND (0X01)

The Unknown HCI Command error code indicates that the controller does not understand the HCI Command Packet OpCode that the host sent. The OpCode given might not correspond to any of the OpCodes specified in this document, or any vendor-specific OpCodes, or the command may not have been implemented.

2.2 UNKNOWN CONNECTION IDENTIFIER (0X02)

The Unknown Connection Identifier error code indicates that a command was sent from the host that should identify a connection, but that connection does not exist.

2.3 HARDWARE FAILURE (0X03)

The Hardware Failure error code indicates to the host that something in the controller has failed in a manner that cannot be described with any other error code. The meaning implied with this error code is implementation dependent.

2.4 PAGE TIMEOUT (0X04)

The Page Timeout error code indicates that a page timed out because of the Page Timeout configuration parameter. This error code may occur only with the HCI_Remote_Name_Request and HCI_Create_Connection commands.

2.5 AUTHENTICATION FAILURE (0X05)

The Authentication Failure error code indicates that pairing or authentication failed due to incorrect results in the pairing or authentication procedure. This could be due to an incorrect PIN or Link Key.

2.6 PIN OR KEY MISSING (0X06)

The PIN or Key Missing error code is used when pairing failed because of a missing PIN, or authentication failed because of a missing Key.

2.7 MEMORY CAPACITY EXCEEDED (0X07)

The Memory Capacity Exceeded error code indicates to the host that the controller has run out of memory to store new parameters.

2.8 CONNECTION TIMEOUT (0X08)

The Connection Timeout error code indicates that the link supervision timeout has expired for a given connection.

2.9 CONNECTION LIMIT EXCEEDED (0X09)

The Connection Limit Exceeded error code indicates that an attempt to create another connection failed because the controller is already at its limit of the number of connections it can support. The number of connections a device can support is implementation dependent.

2.10 SYNCHRONOUS CONNECTION LIMIT TO A DEVICE EXCEEDED (0X0A)

The Synchronous Connection Limit to a Device Exceeded error code indicates that the controller has reached the limit to the number of synchronous connections that can be achieved to a device. The number of synchronous connections a device can support is implementation dependent.

2.11 ACL CONNECTION ALREADY EXISTS (0X0B)

The ACL Connection Already Exists error code indicates that an attempt to create a new ACL Connection to a device when there is already a connection to this device.

2.12 COMMAND DISALLOWED (0X0C)

The Command Disallowed error code indicates that the command requested cannot be executed because the controller is in a state where it cannot process this command at this time. This error shall not be used for command OpCodes where the error code Unknown HCI Command is valid.

2.13 CONNECTION REJECTED DUE TO LIMITED RESOURCES (0X0D)

The Connection Rejected Due To Limited Resources error code indicates that an incoming connection was rejected due to limited resources.

2.14 CONNECTION REJECTED DUE TO SECURITY REASONS (0X0E)

The Connection Rejected Due To Security Reasons error code indicates that a connection was rejected due to security requirements not being fulfilled, like authentication or pairing.

2.15 CONNECTION REJECTED DUE TO UNACCEPTABLE BD_ADDR (0X0F)

The Connection Rejected due to Unacceptable BD_ADDR error code indicates that a connection was rejected because this device does not accept the BD_ADDR. This may be because the device will only accept connections from specific BD_ADDRs.

2.16 CONNECTION ACCEPT TIMEOUT EXCEEDED (0X10)

The Connection Accept Timeout Exceeded error code indicates that the Connection Accept Timeout has been exceeded for this connection attempt.

2.17 UNSUPPORTED FEATURE OR PARAMETER VALUE (0X11)

The Unsupported Feature Or Parameter Value error code indicates that a feature or parameter value in the HCI Command is not supported. This error code shall not be used in an LMP PDU.

2.18 INVALID HCI COMMAND PARAMETERS (0X12)

The Invalid HCI Command Parameters error code indicates that at least one of the HCI command parameters is invalid.

This shall be used when:

- the parameter total length is invalid.
- a command parameter is an invalid type.
- a connection identifier does not match the corresponding event.
- a parameter value shall be even.
- a parameter is outside of the specified range.
- two or more parameter values have inconsistent values.

Note: An invalid type can be, for example, when an SCO connection handle is used where an ACL connection handle is required.

2.19 REMOTE USER TERMINATED CONNECTION (0X13)

The Remote User Terminated Connection error code indicates that the user on the remote device terminated the connection.

2.20 REMOTE DEVICE TERMINATED CONNECTION DUE TO LOW RESOURCES (0X14)

The Remote Device Terminated Connection due to Low Resources error code indicates that the remote device terminated the connection because of low resources.

2.21 REMOTE DEVICE TERMINATED CONNECTION DUE TO POWER OFF (0X15)

The Remote Device Terminated Connection due to Power Off error code indicates that the remote device terminated the connection because the device is about to power off.

2.22 CONNECTION TERMINATED BY LOCAL HOST (0X16)

The Connection Terminated By Local Host error code indicates that the local device terminated the connection.

2.23 REPEATED ATTEMPTS (0X17)

The Repeated Attempts error code indicates that the controller is disallowing an authentication or pairing procedure because too little time has elapsed since the last authentication or pairing attempt failed.

2.24 PAIRING NOT ALLOWED (0X18)

The Pairing Not Allowed error code indicates that the device does not allow pairing. For example, when a device only allows pairing during a certain time window after some user input allows pairing.

2.25 UNKNOWN LMP PDU (0X19)

The Unknown LMP PDU error code indicates that the controller has received an unknown LMP opcode.

2.26 Unsupported Remote Feature / Unsupported LMP Feature (0X1A)

The Unsupported Remote Feature error code indicates that the remote device does not support the feature associated with the issued command or LMP PDU.

2.27 SCO OFFSET REJECTED (0X1B)

The SCO Offset Rejected error code indicates that the offset requested in the LMP_SCO_link_req message has been rejected.

2.28 SCO INTERVAL REJECTED (0X1C)

The SCO Interval Rejected error code indicates that the interval requested in the LMP_SCO_link_req message has been rejected.

2.29 SCO AIR MODE REJECTED (0X1D)

The SCO Air Mode Rejected error code indicates that the air mode requested in the LMP_SCO_link_req message has been rejected.

2.30 INVALID LMP PARAMETERS (0X1E)

The Invalid LMP Parameters error code indicates that some LMP message parameters were invalid. This shall be used when:

- the PDU length is invalid.
- a parameter value shall be even.
- a parameter is outside of the specified range.
- two or more parameters have inconsistent values.

2.31 UNSPECIFIED ERROR (0X1F)

The Unspecified Error error code indicates that no other error code specified is appropriate to use.

2.32 UNSUPPORTED LMP PARAMETER VALUE (0X20)

The Unsupported LMP Parameter Value error code indicates that an LMP message contains at least one parameter value that is not supported by the controller at this time. This is normally used after a long negotiation procedure, for example during an LMP_hold_req, LMP_sniff_req and LMP_encryption_key_size_req message exchanges.

2.33 ROLE CHANGE NOT ALLOWED (0X21)

The Role Change Not Allowed error code indicates that a controller will not allow a role change at this time.

2.34 LMP RESPONSE TIMEOUT (0X22)

The LMP Response Timeout error code indicates that an LMP transaction failed to respond within the LMP response timeout.

2.35 LMP ERROR TRANSACTION COLLISION (0X23)

The LMP Error Transaction Collision error code indicates that an LMP transaction has collided with the same transaction that is already in progress.

2.36 LMP PDU NOT ALLOWED (0X24)

The LMP PDU Not Allowed error code indicates that a controller sent an LMP message with an opcode that was not allowed.

2.37 ENCRYPTION MODE NOT ACCEPTABLE (0X25)

The Encryption Mode Not Acceptable error code indicates that the requested encryption mode is not acceptable at this time.

2.38 LINK KEY CAN NOT BE CHANGED (0X26)

The Link Key Can Not be Changed error code indicates that a link key can not be changed because a fixed unit key is being used.

2.39 REQUESTED QoS NOT SUPPORTED (0X27)

The Requested QoS Not Supported error code indicates that the requested Quality of Service is not supported.

2.40 INSTANT PASSED (0X28)

The Instant Passed error code indicates that an LMP PDU that includes an instant can not be performed because the instant when this would have occurred has passed.

2.41 PAIRING WITH UNIT KEY NOT SUPPORTED (0X29)

The Pairing With Unit Key Not Supported error code indicates that it was not possible to pair as a unit key was requested and it is not supported.

2.42 DIFFERENT TRANSACTION COLLISION (0X2A)

The Different Transaction Collision error code indicates that an LMP transaction was started that collides with an ongoing transaction.

2.43 QoS UNACCEPTABLE PARAMETER (0X2C)

The QoS Unacceptable Parameter error code indicates that the specified quality of service parameters could not be accepted at this time, but other parameters may be acceptable.

2.44 QoS REJECTED (0X2D)

The QoS Rejected error code indicates that the specified quality of service parameters can not be accepted and QoS negotiation should be terminated.

2.45 CHANNEL ASSESSMENT NOT SUPPORTED (0X2E)

The Channel Assessment Not Supported error code indicates that the controller can not perform channel assessment because it is not supported.

2.46 INSUFFICIENT SECURITY (0X2F)

The Insufficient Security error code indicates that the HCI command or LMP message sent is only possible on an encrypted link.

2.47 PARAMETER OUT OF MANDATORY RANGE (0X30)

The Parameter Out Of Mandatory Range error code indicates that a parameter value requested is outside the mandatory range of parameters for the given HCI command or LMP message.

2.48 ROLE SWITCH PENDING (0X32)

The Role Switch Pending error code indicates that a Role Switch is pending. This can be used when an HCI command or LMP message can not be accepted because of a pending role switch. This can also be used to notify a peer device about a pending role switch.

2.49 RESERVED SLOT VIOLATION (0X34)

The Reserved Slot Violation error code indicates that the current Synchronous negotiation was terminated with the negotiation state set to Reserved Slot Violation.

2.50 ROLE SWITCH FAILED (0X35)

The Role Switch Failed error code indicates that a role switch was attempted but it failed and the original piconet structure is restored. The switch may have failed because the TDD switch or piconet switch failed.

2.51 EXTENDED INQUIRY RESPONSE TOO LARGE (0X36)

The Extended Inquiry Response Too Large error code indicates that the extended inquiry response, with the requested requirements for FEC, is too large to fit in any of the packet types supported by the controller.

2.52 SIMPLE PAIRING NOT SUPPORTED BY HOST (0X37)

The Secure Simple Pairing Not Supported by Host error code indicates that the IO capabilities request or response was rejected because the sending Host does not support Secure Simple Pairing even though the receiving Link Manager does.

2.53 HOST BUSY–PAIRING(0X38)

The Host Busy - Pairing error code indicates that the Host is busy with another pairing operation and unable to support the requested pairing. The receiving device should retry pairing again later.

2.54 CONNECTION REJECTED DUE TO NO SUITABLE CHANNEL FOUND (0X39)

The Connection Rejected due to No Suitable Channel Found error code indicates that the controller could not calculate an appropriate value for the Channel selection operation.

2.55 CONTROLLER BUSY (0X3A)

The operation was rejected because the Controller was busy and unable to process the request.

Core System Package [Host volume]
Part E

HOST CONTROLLER INTERFACE FUNCTIONAL SPECIFICATION

This document describes the functional specification for the Host Controller Interface (HCI).
The HCI provides a uniform command interface to a Controller.

CONTENTS

1 Introduction 362
1.1 Lower Layers of the Bluetooth Software Stack 362
2 Overview of Host Controller Transport Layer 364
2.1 Host Controller Transport Layer and AMPS 364
3 Overview of Commands and Events 365
3.1 Generic Events 366
3.2 Device Setup 366
3.3 Controller Flow Control 367
3.4 Controller Information 368
3.5 Controller Configuration 369
3.6 Device Discovery 372
3.7 Connection Setup 374
3.8 Remote Information 379
3.9 Synchronous Connections 380
3.10 Connection State 381
3.11 Piconet Structure 383
3.12 Quality of Service 384
3.13 Physical Links 386
3.14 Host Flow Control 388
3.15 Link Information 389
3.16 Authentication and Encryption 390
3.17 Testing 394
3.18 Alphabetical List of Commands and Events 397
4 HCI Flow Control 404
4.1 Host to Controller Data Flow Control 404
4.1.1 Packet-based Data Flow Control 404
4.1.2 Data-Block-Based Data Flow Control 405
4.2 Controller to Host Data Flow Control 406
4.3 Disconnection Behavior 407
4.4 Command Flow Control 407
4.5 Command Error Handling 408
5 HCI Data Formats 409
5.1 Introduction 409
5.2 Data and Parameter Formats 409
5.3 Handles 410
5.3.1 BR/EDR Controller Handles 410
5.3.2 AMP Controller Handles 411
5.4 Exchange of HCI-Specific Information 412

5.4.1 HCI Command Packet 412
5.4.2 HCI ACL Data Packets 414
5.4.3 HCI Synchronous Data Packets 416
5.4.4 HCI Event Packet 418

6 HCI Configuration Parameters 419
6.1 Scan Enable 419
6.2 Inquiry Scan Interval 419
6.3 Inquiry Scan Window 420
6.4 Inquiry Scan Type 420
6.5 Inquiry Mode 420
6.6 Page Timeout 421
6.7 Connection Accept Timeout 421
6.8 Page Scan Interval 422
6.9 Page Scan Window 422
6.10 Page Scan Period Mode (Deprecated) 422
6.11 Page Scan Type 423
6.12 Voice Setting 423
6.13 PIN Type 424
6.14 Link Key 424
6.15 Failed Contact Counter 424
6.16 Hold Mode Activity 425
6.17 Link Policy Settings 426
6.18 Flush Timeout 427
6.19 Num Broadcast Retransmissions 427
6.20 Link Supervision Timeout 428
6.21 Synchronous Flow Control Enable 428
6.22 Local Name 429
6.23 Extended Inquiry Response 429
6.24 Erroneous Data Reporting 429
6.25 Class Of Device 430
6.26 Supported Commands 430
6.27 Logical Link Accept Timeout 436
6.28 Location Domain Aware 437
6.29 Location Domain 437
6.30 Location Domain Options 437
6.31 Location Options 438
6.32 Flow Control Mode 438

7 HCI Commands and Events 439
7.1 Link Control Commands 439
7.1.1 Inquiry Command 439
7.1.2 Inquiry Cancel Command 441

7.1.3 Periodic Inquiry Mode Command 441
7.1.4 Exit Periodic Inquiry Mode Command 444
7.1.5 Create Connection Command 445
7.1.6 Disconnect Command 448
7.1.7 Create Connection Cancel Command 449
7.1.8 Accept Connection Request Command 450
7.1.9 Reject Connection Request Command 451
7.1.10 Link Key Request Reply Command 453
7.1.11 Link Key Request Negative Reply Command 454
7.1.12 PIN Code Request Reply Command 455
7.1.13 PIN Code Request Negative Reply Command 457
7.1.14 Change Connection Packet Type Command 458
7.1.15 Authentication Requested Command 461
7.1.16 Set Connection Encryption Command 462
7.1.17 Change Connection Link Key Command 463
7.1.18 Master Link Key Command 464
7.1.19 Remote Name Request Command 465
7.1.20 Remote Name Request Cancel Command 467
7.1.21 Read Remote Supported Features Command 468
7.1.22 Read Remote Extended Features Command 469
7.1.23 Read Remote Version Information Command 470
7.1.24 Read Clock Offset Command 471
7.1.25 Read LMP Handle Command 472
7.1.26 Setup Synchronous Connection Command 473
7.1.27 Accept Synchronous Connection Request Command 477
7.1.28 Reject Synchronous Connection Request Command .481
7.1.29 IO Capability Request Reply Command 482
7.1.30 User Confirmation Request Reply Command 484
7.1.31 User Confirmation Request Negative Reply Command 485
7.1.32 User Passkey Request Reply Command 487
7.1.33 User Passkey Request Negative Reply Command 488
7.1.34 Remote OOB Data Request Reply Command 489
7.1.35 Remote OOB Data Request Negative Reply Command 490
7.1.36 IO Capability Request Negative Reply Command 491
7.1.37 Create Physical Link Command 492
7.1.38 Accept Physical Link Request Command 494

7.1.39 Disconnect Physical Link Command 496
7.1.40 Create Logical Link Command 497
7.1.41 Accept Logical Link Command 498
7.1.42 Disconnect Logical Link Command 500
7.1.43 Logical Link Cancel Command 501
7.1.44 Flow Spec Modify Command 502
7.2 Link Policy Commands 503
7.2.1 Hold Mode Command 504
7.2.2 Sniff Mode Command 506
7.2.3 Exit Sniff Mode Command 508
7.2.4 Park State Command 509
7.2.5 Exit Park State Command 511
7.2.6 QoS Setup Command 512
7.2.7 Role Discovery Command 514
7.2.8 Switch Role Command 515
7.2.9 Read Link Policy Settings Command 516
7.2.10 Write Link Policy Settings Command 517
7.2.11 Read Default Link Policy Settings Command 519
7.2.12 Write Default Link Policy Settings Command 520
7.2.13 Flow Specification Command 521
7.2.14 Sniff Subrating Command 523
7.3 Controller & Baseband Commands 524
7.3.1 Set Event Mask Command 525
7.3.2 Reset Command 528
7.3.3 Set Event Filter Command 529
7.3.4 Flush Command 534
7.3.5 Read PIN Type Command 536
7.3.6 Write PIN Type Command 537
7.3.7 Create New Unit Key Command 538
7.3.8 Read Stored Link Key Command 539
7.3.9 Write Stored Link Key Command 541
7.3.10 Delete Stored Link Key Command 543
7.3.11 Write Local Name Command 544
7.3.12 Read Local Name Command 545
7.3.13 Read Connection Accept Timeout Command 546
7.3.14 Write Connection Accept Timeout Command 547
7.3.15 Read Page Timeout Command 548
7.3.16 Write Page Timeout Command 549

7.3.17 Read Scan Enable Command 550
7.3.18 Write Scan Enable Command 551
7.3.19 Read Page Scan Activity Command 552
7.3.20 Write Page Scan Activity Command 553
7.3.21 Read Inquiry Scan Activity Command 554
7.3.22 Write Inquiry Scan Activity Command 556
7.3.23 Read Authentication Enable Command 557
7.3.24 Write Authentication Enable Command 557
7.3.25 Read Class of Device Command 559
7.3.26 Write Class of Device Command 559
7.3.27 Read Voice Setting Command 561
7.3.28 Write Voice Setting Command 562
7.3.29 Read Automatic Flush Timeout Command 563
7.3.30 Write Automatic Flush Timeout Command 564
7.3.31 Read Num Broadcast Retransmissions Command 565
7.3.32 Write Num Broadcast Retransmissions Command 566
7.3.33 Read Hold Mode Activity Command 567
7.3.34 Write Hold Mode Activity Command 568
7.3.35 Read Transmit Power Level Command 569
7.3.36 Read Synchronous Flow Control Enable Command 570
7.3.37 Write Synchronous Flow Control Enable Command 571
7.3.38 Set Controller To Host Flow Control Command 572
7.3.39 Host Buffer Size Command 573
7.3.40 Host Number Of Completed Packets Command 575
7.3.41 Read Link Supervision Timeout Command 577
7.3.42 Write Link Supervision Timeout Command 578
7.3.43 Read Number Of Supported IAC Command 579
7.3.44 Read Current IAC LAP Command 581
7.3.45 Write Current IAC LAP Command 582
7.3.46 Set AFH Host Channel Classification Command 583
7.3.47 Read Inquiry Scan Type Command 584
7.3.48 Write Inquiry Scan Type Command 585
7.3.49 Read Inquiry Mode Command 586
7.3.50 Write Inquiry Mode Command 587
7.3.51 Read Page Scan Type Command 588
7.3.52 Write Page Scan Type Command 589
7.3.53 Read AFH Channel Assessment Mode Command 590
7.3.54 Write AFH Channel Assessment Mode Command 591

7.3.55 Read Extended Inquiry Response Command 592
7.3.56 Write Extended Inquiry Response Command 593
7.3.57 Refresh Encryption Key Command 594
7.3.58 Read Simple Pairing Mode Command 595
7.3.59 Write Simple Pairing Mode Command 596
7.3.60 Read Local OOB Data Command 597
7.3.61 Read Inquiry Response Transmit Power Level Command 598
7.3.62 Write Inquiry Transmit Power Level Command 599
7.3.63 Send Keypress Notification Command 600
7.3.64 Read Default Erroneous Data Reporting 601
7.3.65 Write Default Erroneous Data Reporting 602
7.3.66 Enhanced Flush Command 603
7.3.67 Read Logical Link Accept Timeout Command 604
7.3.68 Write Logical Link Accept Timeout Command 605
7.3.69 Set Event Mask Page 2 Command 606
7.3.70 Read Location Data Command 607
7.3.71 Write Location Data Command 608
7.3.72 Read Flow Control Mode Command 609
7.3.73 Write Flow Control Mode Command 609
7.3.74 Read Enhanced Transmit Power Level Command 610
7.3.75 Read Best Effort Flush Timeout Command 612
7.3.76 Write Best Effort Flush Timeout Command 613
7.3.77 Short Range Mode Command 614
7.4 Informational Parameters 615
7.4.1 Read Local Version Information Command 615
7.4.2 Read Local Supported Commands Command 617
7.4.3 Read Local Supported Features Command 618
7.4.4 Read Local Extended Features Command 619
7.4.5 Read Buffer Size Command 620
7.4.6 Read BD_ADDR Command 622
7.4.7 Read Data Block Size Command 623
7.5 Status Parameters 624
7.5.1 Read Failed Contact Counter Command 624
7.5.2 Reset Failed Contact Counter Command 625
7.5.3 Read Link Quality Command 626
7.5.4 Read RSSI Command 628
7.5.5 Read AFH Channel Map Command 629

7.5.6 Read Clock Command 632
7.5.7 Read Encryption Key Size Command 633
7.5.8 Read Local AMP Info Command 635
7.5.9 Read Local AMP ASSOC Command 639
7.5.10 Write Remote AMP ASSOC Command 641
7.6 Testing Commands 644
7.6.1 Read Loopback Mode Command 644
7.6.2 Write Loopback Mode Command 645
7.6.3 Enable Device Under Test Mode Command 649
7.6.4 Write Simple Pairing Debug Mode Command 650
7.6.5 Enable AMP Receiver Reports Command 651
7.6.6 AMP Test End Command 652
7.6.7 AMP Test Command 653
7.7 Events 654
7.7.1 Inquiry Complete Event 654
7.7.2 Inquiry Result Event 654
7.7.3 Connection Complete Event 657
7.7.4 Connection Request Event 658
7.7.5 Disconnection Complete Event 659
7.7.6 Authentication Complete Event 660
7.7.7 Remote Name Request Complete Event 661
7.7.8 Encryption Change Event 662
7.7.9 Change Connection Link Key Complete Event 663
7.7.10 Master Link Key Complete Event 663
7.7.11 Read Remote Supported Features Complete Event 664
7.7.12 Read Remote Version Information Complete Event 665
7.7.13 QoS Setup Complete Event 666
7.7.14 Command Complete Event 669
7.7.15 Command Status Event 670
7.7.16 Hardware Error Event 671
7.7.17 Flush Occurred Event 671
7.7.18 Role Change Event 672
7.7.19 Number Of Completed Packets Event 672
7.7.20 Mode Change Event 674
7.7.21 Return Link Keys Event 675
7.7.22 PIN Code Request Event 676
7.7.23 Link Key Request Event 677
7.7.24 Link Key Notification Event 678

7.7.25 Loopback Command Event 679
7.7.26 Data Buffer Overflow Event 679
7.7.27 Max Slots Change Event 680
7.7.28 Read Clock Offset Complete Event 681
7.7.29 Connection Packet Type Changed Event 682
7.7.30 QoS Violation Event 683
7.7.31 Page Scan Repetition Mode Change Event 685
7.7.32 Flow Specification Complete Event 686
7.7.33 Inquiry Result with RSSI Event 688
7.7.34 Read Remote Extended Features Complete Event 690
7.7.35 Synchronous Connection Complete Event 691
7.7.36 Synchronous Connection Changed Event 692
7.7.37 Sniff Subrating Event 694
7.7.38 Extended Inquiry Result Event 695
7.7.39 Encryption Key Refresh Complete 698
7.7.40 IO Capability Request Event 699
7.7.41 IO Capability Response Event 700
7.7.42 User Confirmation Request Event 701
7.7.43 User Passkey Request Event 702
7.7.44 Remote OOB Data Request Event 702
7.7.45 Simple Pairing Complete Event 703
7.7.46 Link Supervision Timeout Changed Event 704
7.7.47 Enhanced Flush Complete Event 705
7.7.48 User Passkey Notification Event 705
7.7.49 Keypress Notification Event 706
7.7.50 Remote Host Supported Features Notification Event . 706
7.7.51 Physical Link Complete Event 707
7.7.52 Channel Selected Event 708
7.7.53 Disconnection Physical Link Complete Event 708
7.7.54 Physical Link Loss Early Warning Event 709
7.7.55 Physical Link Recovery Event 710
7.7.56 Logical Link Complete Event 710
7.7.57 Disconnection Logical Link Complete Event 711
7.7.58 Flow Spec Modify Complete Event 712
7.7.59 Number Of Completed Data Blocks Event 713
7.7.60 Short Range Mode Change Complete Event 715
7.7.61 AMP Status Change Event 716
7.7.62 AMP Start Test Event 718

7.7.63 AMP Test End Event 718
7.7.64 AMP Receiver Report Event 719

8 List of Figures 721

9 List of Tables 722

10 Appendix A: Deprecated Commands, Events and Configuration Parameters 723

10.1 Read Page Scan Mode Command 724
10.2 Write Page Scan Mode Command 725
10.3 Read Page Scan Period Mode Command 726
10.4 Write Page Scan Period Mode Command 727
10.5 Add SCO Connection Command 728
10.6 Page Scan Mode Change Event 730
10.7 Read Country Code Command 731
10.8 Read Encryption Mode Command 732
10.9 Write Encryption Mode Command 732
10.10 Deprecated Parameters 733
10.10.1 Authentication Enable 733
10.10.2 Encryption Mode 733
10.10.3 Page Scan Mode 734

1 INTRODUCTION

This Part of the Bluetooth Core Specification describes the functional specifications for the Host Controller Interface (HCI). The HCI provides a uniform interface method of accessing a Bluetooth Controller's capabilities. The next two sections provide a brief overview of the lower layers of the Bluetooth software stack and of the Bluetooth hardware. Section 2, provides an overview of the Lower HCI Device Driver Interface on the host device. Section 4, describes the flow control used between the Host and the Controller. Section 7, describes each of the HCI Commands in details, identifies parameters for each of the commands, and lists events associated with each command.

1.1 LOWER LAYERS OF THE BLUETOOTH SOFTWARE STACK

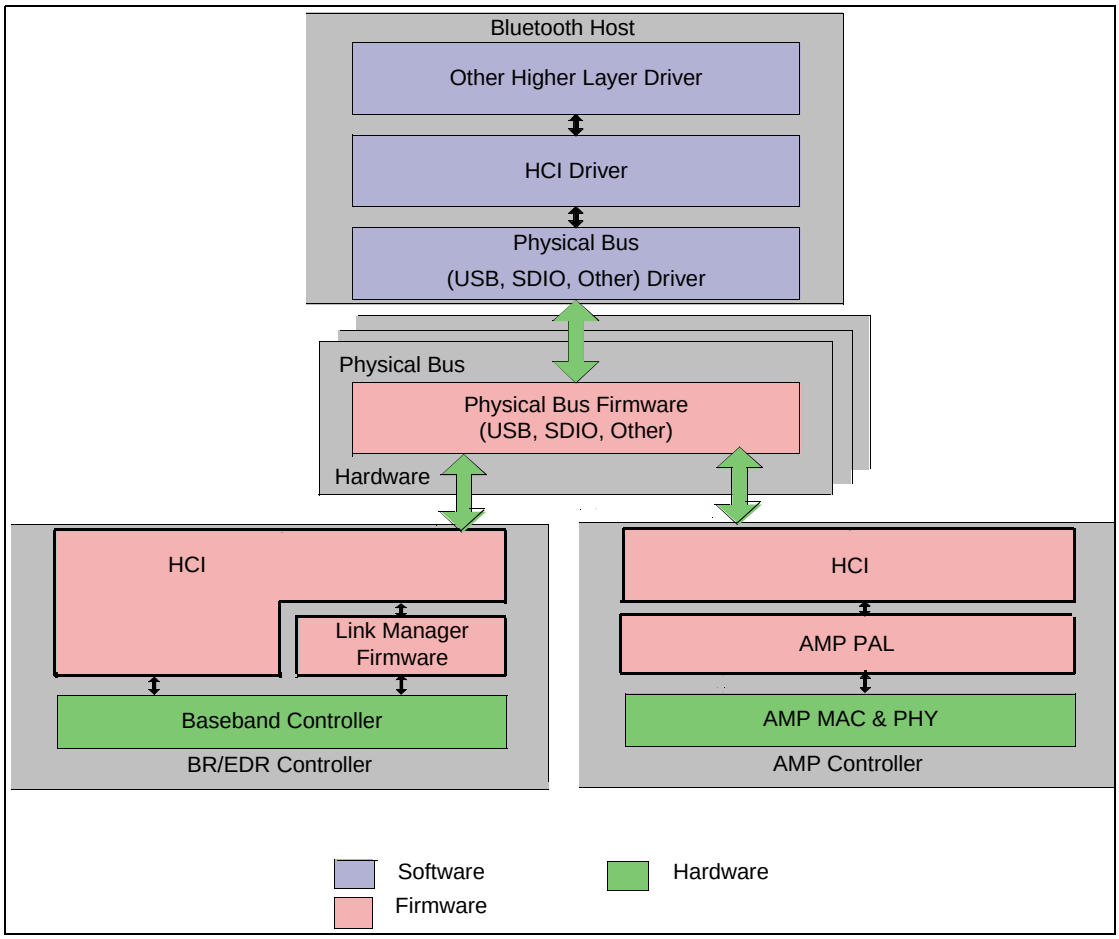

Figure 1.1: Overview of the Lower Software Layers

Figure 1.1 provides an overview of the lower software layers.

Several layers may exist between the HCI driver on the host system and the HCI firmware in the Controller(s). These intermediate layers, the Host Controller Transport Layer, provide the ability to transfer data without intimate knowl-

edge of the data. In Figure 1.1 a single Host may drive a BR/EDR Controller and one or more AMP Controllers within a BR/EDR Controller.

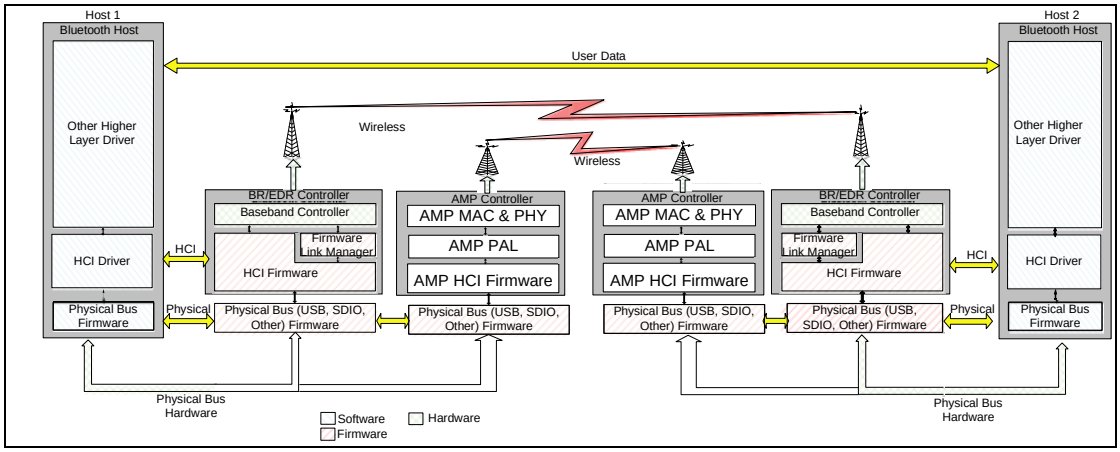

Figure 1.2: End to End Overview of Lower Software Layers to Transfer Data

Figure 1.2 illustrates the path of a data transfer from one device to another. The HCI driver on the Host exchanges data and commands with the HCI firmware on the Bluetooth hardware. The Host Control Transport Layer (i.e. physical bus) driver provides both HCI layers with the ability to exchange information with each other.

The Host will receive asynchronous notifications of HCI events independent of which Host Controller Transport Layer is used. HCI events are used for notifying the Host when something occurs. When the Host discovers that an event has occurred it will then parse the received event packet to determine which event occurred.

2 OVERVIEW OF HOST CONTROLLER TRANSPORT LAYER

The host driver stack has a transport layer between the Host Controller Interface driver and the Host.

The main goal of this transport layer is transparency. The Host Controller driver (which interfaces to the Controller) should be independent of the underlying transport technology. In addition, the transport should not require any understanding of the data that the Host Controller driver passes to the Controller. This allows the logical interface (HCI) or the Controller to be upgraded without affecting the transport layer.

The specified Host Controller Transport Layers are described in a separate volume. (See specification volume 4)

2.1 HOST CONTROLLER TRANSPORT LAYER AND AMPS

The logical Host Controller Interface does not consider multiplexing/routing over the Host Controller Transport Layer(s). The Host designer must consider this in deciding which of the multiple controller configurations it will support. Each logical AMP HCI instantiation is particular to a single AMP Controller. The Host shall direct each HCI Command to a specific AMP, and be aware of the source of each HCI Event, and manage flow control separately for each HCI. The Host's Controller_ID concept used for AMP enumeration may assist with this.

The logical HCI definition does not consider the initial discovery of what AMPs are present in the system.

The upper layers discover the AMP capabilities (see [Vol 3 Part E], Section 3.3). As seen by the AMP Manager, each local AMP has a Controller_ID that is used to route the data and commands to the correct AMP Controller. This identifier is not used in AMP HCI.

The separate logical HCIs within a system may be on the same physical HCI transport, on separate physical HCI transports, or any combination. This may require a layer of multiplexing, which is not defined within this AMP HCI logical specification.

The logical HCI is not affected by this topology. The logical HCI definition describes commands and events as seen by a single AMP.

3 OVERVIEW OF COMMANDS AND EVENTS

The commands and events are sent between the Host and the Controller(s). These are grouped into logical groups by function.

Generic Events	The generic events can occur due to multiple commands, or events that can occur at any time.
Device Setup	The device setup commands are used to place the Controller into a known state.
Controller Flow Control	The controller flow control commands and events are used to control data flow from the Host to the controller.
Controller Information	The controller information commands allow the Host to discover local information about the device.
Controller Configuration	The controller configuration commands and events allow the global configuration parameters to be configured.
Device Discovery	The device discovery commands and events allow a device to discover other devices in the surrounding area.
Connection Setup	The connection setup commands and events allow a device to make a connection to another device.
Remote Information	The remote information commands and events allow information about a remote device's configuration to be discovered.
Synchronous Connections	The synchronous connection commands and events allow synchronous connections to be created
Connection State	The connection state commands and events allow the configuration of a link, especially for low power operation.
Piconet Structure	The piconet structure commands and events allow the discovery and reconfiguration of piconet.
Quality of Service	The quality of service commands and events allow quality of service parameters to be specified.
Physical Links	The physical link commands and events allow the configuration of a physical link.
Host Flow Control	The Host flow control commands and events allow flow control to be used towards the Host.
Link Information	The link information commands and events allow information about a link to be read.
Authentication and Encryption	The authentication and encryption commands and events allow authentication of a remote device and then encryption of the link.
Testing	The testing commands and events allow a device to be placed into test mode.

Table 3.1: Overview of commands and events

The version information in this section denotes the version number of the specification that this command or event was first specified, and the Controller that supports the command: All, BR/EDR, 802.11 PAL only, or AMP.

3.1 GENERIC EVENTS

The generic events occur due to multiple commands, or events that can occur at any time.

Name	Vers.	Summary description	Supported Controllers
Command Complete Event	1.1	The Command Complete event is used by the Controller to pass the return status of a command and the other event parameters for each HCI Command.	All
Command Status Event	1.1	The Command Status event is used to indicate that the command described by the Command_Opcode parameter has been received and the Controller is currently performing the task for this command.	All
Hardware Error Event	1.1	The Hardware Error event is used to indicate some type of hardware failure for the Controller.	All

Table 3.2: Generic events

3.2 DEVICE SETUP

The device setup group of commands are used to place the Controller into a known state.

Name	Vers.	Summary description	Supported Controllers
Reset Command	1.1	For a BR/EDR Controller, the Reset command resets HCI, the Link Manager, and the Bluetooth radio. For an AMP Controller, the Reset command resets HCI and the AMP PAL.	All

Device setup

3.3 CONTROLLER FLOW CONTROL

The controller flow control group of commands and events are used to control data flow from the Host to the Controller.

Name	Vers.	Summary description	Supported Controllers
Read Buffer Size Command	1.1	The Read_Buffer_Size command returns the size of the HCI buffers. These buffers are used by the Controller to buffer data that is to be transmitted.	All
Number Of Completed Packets Event	1.1	The Number Of Completed Packets event is used by the Controller to indicate to the Host how many HCI Data Packets have been completed for each Connection Handle since the previous Number Of Completed Packets event was sent.	All
Read Data Block Size Command	3.0 + HS	The Read Data Block Size command returns the maximum size of the HCI buffers. These buffers are used by the Controller to buffer data that is to be transmitted.	All
Number Of Completed Data Blocks Event	3.0 + HS	The Number Of Completed Data Blocks event is used by the Controller to indicate to the Host how many HCI ACL Data Packets have been completed and how many data block buffers have been freed for each Handle since the previous Number of Completed Data Blocks event was sent.	All
Read Flow Control Mode Command	3.0 + HS	The Read Flow Control Mode command returns the value of the Flow_Control_Mode configuration parameter supported by this Controller.	All
Write Flow Control Mode Command	3.0 + HS	The Write Flow Control Mode command sets the value of the Flow_Control_Mode configuration parameter for this Controller.	All

Table 3.3: Controller flow control

3.4 CONTROLLER INFORMATION

The controller information group of commands allows the Host to discover local information about the device.

Name	Vers.	Summary description	Supported Controllers
Read Local Version Information Command	1.1	The Read Local Version Information command will read the version information for the local Controller.	All
Read Local Supported Commands Command	1.2	The Read Local Supported Commands command requests a list of the supported HCI commands for the local device.	All
Read Local Supported Features Command	1.1	The Read Local Supported Features command requests a list of the supported features for the local device.	All
Read Local Extended Features Command	1.2	The Read Local Extended Features command requests a list of the supported extended features for the local device	BR/EDR
Read BD_ADDR Command	1.1	The Read BD_ADDR command will read the value for the BD_ADDR parameter.	BR/EDR

Table 3.4: Controller information

3.5 CONTROLLER CONFIGURATION

The controller configuration group of commands and events allows the global configuration parameters to be configured.

Name	Vers.	Summary description	Supported Controllers
Read Local Name Command	1.1	The Read Local Name command provides the ability to read the stored user-friendly name for the BR/EDR Controller.	BR/EDR
Write Local Name Command	1.1	The Write Local Name command provides the ability to modify the user-friendly name for the BR/EDR Controller.	BR/EDR
Read Class of Device Command	1.1	The Read Class of Device command will read the value for the Class of Device configuration parameter, which is used to indicate its capabilities to other devices.	BR/EDR
Write Class of Device Command	1.1	The Write Class of Device command will write the value for the Class_of_Device configuration parameter, which is used to indicate its capabilities to other devices.	BR/EDR
Read Number Of Supported IAC Command	1.1	The Read Number of Supported IAC command will read the value for the number of Inquiry Access Codes (IAC) that the local BR/EDR Controller can simultaneously listen for during an Inquiry Scan.	BR/EDR
Read Current IAC LAP Command	1.1	The Read Current IAC LAP command will read the LAP(s) used to create the Inquiry Access Codes (IAC) that the local BR/EDR Controller is simultaneously scanning for during Inquiry Scans.	BR/EDR
Write Current IAC LAP Command	1.1	The Write Current IAC LAP command will write the LAP(s) used to create the Inquiry Access Codes (IAC) that the local BR/EDR Controller is simultaneously scanning for during Inquiry Scans.	BR/EDR

Table 3.5: Controller configuration

Name	Vers.	Summary description	Supported Controllers
Read Scan Enable Command	1.1	The Read Scan Enable command will read the value for the Scan Enable configuration parameter, which controls whether or not the BR/EDR Controller will periodically scan for page attempts and/or inquiry requests from other BR/EDR Controllers.	BR/EDR
Write Scan Enable Command	1.1	The Write Scan Enable command will write the value for the Scan Enable configuration parameter, which controls whether or not the BR/EDR Controller will periodically scan for page attempts and/or inquiry requests from other BR/EDR Controllers.	BR/EDR
Write Extended Inquiry Response Command	2.1 + EDR	The Write Extended Inquiry Response command will write the data that the BR/EDR Controller sends in the extended inquiry response packet during inquiry response.	BR/EDR
Read Extended Inquiry Response Command	2.1 + EDR	The Read Extended Inquiry Response command will read the data that the BR/EDR Controller sends in the extended inquiry response packet during inquiry response.	BR/EDR
Write Default Erroneous Data Reporting Command	2.1 + EDR	The Write Default Erroneous Data Reporting command will write the value for the Erroneous Data Reporting configuration parameter, which controls whether the Bluetooth controller will provide data for every (e)SCO interval, with the Packet_Status_Flag in HCI Synchronous Data Packets set according to HCI Synchronous Data Packets.	BR/EDR

Table 3.5: Controller configuration

Name	Vers.	Summary description	Supported Controllers
Read Default Erroneous Data Reporting Command	2.1 + EDR	The Read Default Erroneous Data Reporting command will read the value for the Erroneous Data Reporting configuration parameter, which controls whether the BR/EDR Controller will provide data for every (e)SCO interval, with the Packet_Status_Flag in HCI Synchronous Data Packets set according to HCI Synchronous Data Packets.	BR/EDR
Read Location Data Command	3.0 + HS	The Read Location Data command provides the ability to read the Location Data parameters from any stored knowledge of environment or regulations or currently in use in the AMP Controller	AMP
Write Location Data Command	3.0 + HS	The Write Location Data command is used to tell the Controller any knowledge of environment or regulations currently in force, which may affect the operation of the Controller.	AMP

Table 3.5: Controller configuration

3.6 DEVICE DISCOVERY

The device discovery group of commands and events allow a device to discovery other devices in the surrounding area.

Name	Vers.	Summary description	Supported Controllers
Inquiry Command	1.1	The Inquiry command will cause the BR/EDR Controller to enter Inquiry Mode. Inquiry Mode is used to discovery other nearby BR/EDR Controllers.	BR/EDR
Inquiry Result Event	1.1	The Inquiry Result event indicates that a BR/EDR Controller or multiple BR/EDR Controllers have responded so far during the current Inquiry process.	BR/EDR
Inquiry Result with RSSI Event	1.2	The Inquiry Result with RSSI event indicates that a BR/EDR Controller or multiple BR/EDR Controllers have responded so far during the current Inquiry process.	BR/EDR
Extended Inquiry Result Event	2.1 + EDR	The Extended Inquiry Result event indicates that a BR/EDR Controller has responded with an extended inquiry response during the current Inquiry process.	BR/EDR
Inquiry Cancel Command	1.1	The Inquiry Cancel command will cause the BR/EDR Controller to stop the current Inquiry if the BR/EDR Controller is in Inquiry Mode.	BR/EDR
Inquiry Complete Event	1.1	The Inquiry Complete event indicates that the Inquiry is finished.	BR/EDR
Periodic Inquiry Mode Command	1.1	The Periodic Inquiry Mode command is used to configure the BR/EDR Controller to perform an automatic Inquiry based on a specified period range.	BR/EDR
Exit Periodic Inquiry Mode Command	1.1	The Exit Periodic Inquiry Mode command is used to end the Periodic Inquiry mode when the local device is in Periodic Inquiry Mode.	BR/EDR

Table 3.6: Device discovery

Name	Vers.	Summary description	Supported Controllers
Read Inquiry Scan Activity Command	1.1	The Read Inquiry Scan Activity command will read the value for Inquiry Scan Interval and Inquiry Scan Window configuration parameters. Inquiry Scan Interval defines the amount of time between consecutive inquiry scans. Inquiry Scan Window defines the amount of time for the duration of the inquiry scan.	BR/EDR
Write Inquiry Scan Activity Command	1.1	The Write Inquiry Scan Activity command will write the value for Inquiry Scan Interval and Inquiry Scan Window configuration parameters. Inquiry Scan Interval defines the amount of time between consecutive inquiry scans. Inquiry Scan Window defines the amount of time for the duration of the inquiry scan.	BR/EDR
Read Inquiry Scan Type Command	1.2	The Read Inquiry Scan Type command is used to read the Inquiry Scan Type configuration parameter of the local BR/EDR Controller. The Inquiry Scan Type configuration parameter can set the inquiry scan to either normal or interlaced scan.	BR/EDR
Write Inquiry Scan Type Command	1.2	The Write Inquiry Scan Type command is used to write the Inquiry Scan Type configuration parameter of the local BR/EDR Controller. The Inquiry Scan Type configuration parameter can set the inquiry scan to either normal or interlaced scan.	BR/EDR
Read Inquiry Mode Command	1.2	The Read Inquiry Mode command is used to read the Inquiry Mode configuration parameter of the local BR/EDR Controller.	BR/EDR
Write Inquiry Mode Command	1.2	The Write Inquiry Mode command is used to write the Inquiry Mode configuration parameter of the local BR/EDR Controller.	BR/EDR
Read Inquiry Response Transmit Power Level Command	2.1 + EDR	This command will read the inquiry response Transmit Power level used to transmit the FHS and EIR data packets. This can be used directly in the Tx Power Level EIR data type.	BR/EDR

Table 3.6: Device discovery

Name	Vers.	Summary description	Supported Controllers
Write Inquiry Transmit Power Level Command	2.1 + EDR	This command is used to write the transmit power level used to transmit the inquiry (ID) data packets.	BR/EDR

Table 3.6: Device discovery

3.7 CONNECTION SETUP

The connection setup group of commands and events are used to allow a device to make a connection to another device.

Name	Vers.	Summary description	Supported Controllers
Create Connection Command	1.1	The Create Connection command will cause the BR/EDR link manager to create an ACL connection to the BR/EDR Controller with the BD_ADDR specified by the command parameters.	BR/EDR
Connection Request Event	1.1	The Connection Request event is used to indicate that a new incoming BR/EDR connection is trying to be established.	BR/EDR
Accept Connection Request Command	1.1	The Accept Connection Request command is used to accept a new incoming BR/EDR connection request.	BR/EDR
Reject Connection Request Command	1.1	The Reject Connection Request command is used to decline a new incoming BR/EDR connection request.	BR/EDR
Create Connection Cancel Command	1.2	The Create Connection Cancel Command is used to cancel an ongoing Create Connection.	BR/EDR
Connection Complete Event	1.1	The Connection Complete event indicates to both of the Hosts forming the connection that a new BR/EDR connection has been established.	BR/EDR
Disconnect Command	1.1	The Disconnect command is used to terminate an existing BR/EDR connection.	BR/EDR
Disconnection Complete Event	1.1	The Disconnection Complete event occurs when a connection has been terminated.	BR/EDR

Table 3.7: Connection setup

Name	Vers.	Summary description	Supported Controllers
Read Page Timeout Command	1.1	The Read Page Timeout command will read the value for the Page Reply Timeout configuration parameter, which determines the time the BR/EDR Controller will wait for the remote device to respond to a connection request before the local device returns a connection failure.	BR/EDR
Write Page Timeout Command	1.1	The Write Page Timeout command will write the value for the Page Reply Timeout configuration parameter, which allows theBR/EDR Controller to define the amount of time a connection request will wait for the remote device to respond before the local device returns a connection failure.	BR/EDR
Read Page Scan Activity Command	1.1	The Read Page Scan Activity command will read the values for the Page Scan Interval and Page Scan Window configuration parameters. Page Scan Interval defines the amount of time between consecutive page scans. Page Scan Window defines the duration of the page scan.	BR/EDR
Write Page Scan Activity Command	1.1	The Write Page Scan Activity command will write the value for Page Scan Interval and Page Scan Window configuration parameters. Page Scan Interval defines the amount of time between consecutive page scans. Page Scan Window defines the duration of the page scan.	BR/EDR
Page Scan Repetition Mode Change Event	1.1	The Page Scan Repetition Mode Change event indicates that the connected remote BR/EDR Controller with the specified Connection_Handle has successfully changed the Page_Scan_Repetition_Mode (SR)."	BR/EDR

Table 3.7: Connection setup

Name	Vers.	Summary description	Supported Controllers
Read Page Scan Type Command	1.2	The Read Page Scan Type command is used to read the page scan type of the local BR/EDR Controller. The Page Scan Type configuration parameter can set the page scan to either normal or interlaced scan.	BR/EDR
Write Page Scan Type Command	1.2	The Write Page Scan Type command is used to write the page scan type of the local BR/EDR Controller. The Page Scan Type configuration parameter can set the page scan to either normal or interlaced scan.	BR/EDR
Read Connection Accept Timeout Command	1.1	The Read Connection Accept Timeout command will read the value for the Connection Accept Timeout configuration parameter, which allows the Controller to automatically deny a connection request after a specified period has occurred, and to refuse a new connection.	All
Write Connection Accept Timeout Command	1.1	The Write Connection Accept Timeout command will write the value for the Connection Accept Timeout configuration parameter, which allows the Controller to automatically deny a connection request after a specified period has occurred, and to refuse a new connection.	All
Accept Logical Link Command	3.0 + HS	The Accept Logical Command will cause the AMP Controller to create a logical link to the remote AMP Controller identified by the physical link handle.	AMP
Accept Physical Link Command	3.0 + HS	The Accept Physical Link command will cause the AMP Controller to accept a Physical Link request from the initiating BR/EDR Controller 's AMP Controller specified by the command parameters.	AMP

Table 3.7: Connection setup

Name	Vers.	Summary description	Supported Controllers
Create Logical Link Command	3.0 + HS	The Create Logical Command will cause the AMP Controller to create a logical link to the remote AMP Controller identified by the physical link handle.	AMP
Create Physical Link Command	3.0 + HS	The Create Physical Link command will cause the AMP Controller to initiate a Physical Link creation to the remote BR/EDR Controller's AMP Controller specified by the command parameters.	AMP
Disconnect Logical Link Command	3.0 + HS	The Disconnect Logical Link command is used to terminate the designated logical link.	AMP
Disconnection Logical Link Complete Event	3.0 + HS	The Disconnection Logical Link Complete event occurs when an AMP Logical Link has been terminated.	AMP
Disconnect Physical Link Command	3.0 + HS	The Disconnect Phyical Link command is used to terminate the designated physical link (during or after creation).	AMP
Disconnection Physical Link Complete Event	3.0 + HS	The Disconnection Physical Link Complete event occurs when an AMP Physical Link has been terminated.	AMP
Logical Link Cancel Command	3.0 + HS	The Logical Link Cancel command is used to request cancellation of the ongoing logical link creation process identified by the Physical_Link_Handle and the Tx_Flow_Spec_ID	AMP
Logical Link Complete Event	3.0 + HS	The Logical Link Complete event indicates to both of the Hosts forming the connection that a new AMP Logical Link has been established.	AMP
Physical Link Complete Event	3.0 + HS	The Physical Link Complete event indicates to both of the Hosts forming the connection that a new AMP Logical Link has been established	AMP
Physical Link Loss Early Warning Event	3.0 + HS	The Physical Link Loss Early Warning event occurs when a physical link has indication that the link may be disrupted.	AMP

Table 3.7: Connection setup

Name	Vers.	Summary description	Supported Controllers
Physical Link Recovery Event	3.0 + HS	The Physical Link Recovery event indicates that whatever interruption caused an earlier Physical Link Loss Early Warning event has now been cleared.	AMP
Read Logical Link Accept Timeout Command	3.0 + HS	The Read Logical Link Accept Timeout command will read the value for the Logical Link Accept Timeout configuration parameter, which allows the AMP Controller to automatically deny a Logical Link request after a specified period has occurred, and to refuse a new connection.	AMP
Write Logical Link Accept Timeout Command	3.0 + HS	The Write Logical Link Accept Timeout command will write the value for the Logical Link Accept Timeout configuration parameter, which allows the AMP Controller to automatically deny a connection request after a specified period has occurred, and to refuse a new connection.	AMP
Channel Selected Event	3.0 + HS	The Channel Selected event indicates to the Host originating the physical link that the link information data is available to be read using the Read Local AMP Assoc command.	AMP

Table 3.7: Connection setup

3.8 REMOTE INFORMATION

The remote information group of commands and events allows information about a remote devices configuration to be discovered.

Name	Vers.	Summary description	Supported Controllers
Remote Name Request Command	1.1	The Remote Name Request command is used to obtain the user-friendly name of another BR/EDR Controller.	BR/EDR
Remote Name Request Cancel Command	1.2	The Remote Name Request Cancel Command is used to cancel an ongoing Remote Name Request.	BR/EDR
Remote Name Request Complete Event	1.1	The Remote Name Request Complete event is used to indicate a remote name request has been completed.	BR/EDR
Read Remote Supported Features Command	1.1	The Read Remote Supported Features command requests a list of the supported features of a remote device.	BR/EDR
Read Remote Supported Features Complete Event	1.1	The Read Remote Supported Features Complete event is used to indicate the completion of the process of the Link Manager obtaining the supported features of the remote BR/EDR Controller specified by the Connection Handle event parameter.	BR/EDR
Read Remote Extended Features Command	1.2	The Read Remote Extended Features command requests a list of the supported extended features of a remote device	BR/EDR
Read Remote Extended Features Complete Event	1.2	The Read Remote Extended Features Complete Event is used to indicate the completion of the process of the Link Manager obtaining the supported Extended features of the remote BR/EDR Controller specified by the Connection Handle event parameter.	BR/EDR
Read Remote Version Information Command	1.1	The Read Remote Version Information command will read the values for the version information for the remote BR/EDR Controller.	BR/EDR

Table 3.8: Remote information

Name	Vers.	Summary description	Supported Controllers
Read Remote Version Information Complete Event	1.1	The Read Remote Version Information Complete event is used to indicate the completion of the process of the Link Manager obtaining the version information of the remote BR/EDR Controller specified by the Connection Handle event parameter.	BR/EDR

Table 3.8: Remote information

3.9 SYNCHRONOUS CONNECTIONS

The synchronous connections group of commands and events allows synchronous connections to be created.

Name	Vers.	Summary description	Supported Controllers
Setup Synchronous Connection Command	1.2	The Setup Synchronous Connection command adds a new or modifies an existing synchronous logical transport (SCO or eSCO) on a physical link depending on the Connection Handle parameter specified.	BR/EDR
Synchronous Connection Complete Event	1.2	The Synchronous Connection Complete event indicates to both the Hosts that a new Synchronous connection has been established.	BR/EDR
Synchronous Connection Changed Event	1.2	The Synchronous Connection Changed event indicates to the Host that an existing Synchronous connection has been reconfigured.	BR/EDR
Accept Synchronous Connection Request Command	1.2	The Accept Synchronous ConnectionRequest command is used to accept an incoming request for a synchronous connection and to inform the local Link Manager about the acceptable parameter values for the synchronous connection.	BR/EDR
Reject Synchronous Connection Request Command	1.2	The Reject Synchronous Connection Request is used to decline an incoming request for a synchronous link.	BR/EDR
Read Voice Setting Command	1.1	The Read Voice Setting command will read the values for the Voice Setting configuration parameter, which controls all the various settings for the voice connections.	BR/EDR

Table 3.9: Synchronous connections

Name	Vers.	Summary description	Supported Controllers
Write Voice Setting Command	1.1	The Write Voice Setting command will write the values for the Voice Setting configuration parameter, which controls all the various settings for the voice connections.	BR/EDR

Table 3.9: Synchronous connections

3.10 CONNECTION STATE

The connection state group of commands and events allows the configuration of a link, especially for low power operation.

Name	Vers.	Summary description	Supported Controllers
Mode Change Event	1.1	The Mode Change event is used to indicate that the current mode has changed.	BR/EDR
Max Slots Change Event	1.1	The Max Slots Change event it used to indicate a change in the max slots by the LM.	BR/EDR
Hold Mode Command	1.1	The Hold Mode command is used to initiate Hold Mode.	BR/EDR
Sniff Mode Command	1.1	The Sniff Mode command is used to alter the behavior of the LM and have the LM place the local or remote device into the sniff mode.	BR/EDR
Sniff Subrating Command	2.1 + EDR	The Sniff Subrating command is used to configure the sniff subrating parameters in the local device	BR/EDR
Sniff Subrating Event	2.1 + EDR	The Sniff Subrating event is used to inform the Host of the local and remote transmit and receive latencies	BR/EDR
Exit Sniff Mode Command	1.1	The Exit Sniff Mode command is used to end the sniff mode for a Connection Handle which is currently in sniff mode.	BR/EDR
Park State Command	1.1	The Park State command is used to alter the behavior of the LM and have the LM place the local or remote device into the park state.	BR/EDR

Table 3.10: Connection state

Name	Vers.	Summary description	Supported Controllers
Exit Park State Command	1.1	The Exit Park State command is used to switch the BR/EDR Controller from park state back to active mode.	BR/EDR
Read Link Policy Settings Command	1.1	The Read Link Policy Settings command will read the Link Policy configuration parameter for the specified Connection Handle. The Link Policy settings allow the Host to specify which Link Modes the LM can use for the specified Connection Handle.	BR/EDR
Write Link Policy Settings Command	1.1	The Write Link Policy Settings command will write the Link Policy configuration parameter for the specified Connection Handle. The Link Policy settings allow the Host to specify which Link Modes the LM can use for the specified Connection Handle.	BR/EDR
Read Default Link Policy Settings Command	1.2	The Read Default Link Policy Settings command will read the Default Link Policy configuration parameter for all new connections.	BR/EDR
Write Default Link Policy Settings Command	1.2	The Write Default Link Policy Settings command will write the Default Link Policy configuration parameter for all new connections.	BR/EDR

Table 3.10: Connection state

3.11 PICONET STRUCTURE

The piconet structure group of commands and events allows the discovery and reconfiguration of a piconet.

Name	Vers.	Summary description	Supported Controllers
Role Discovery Command	1.1	The Role Discovery command is used for a BR/EDR Controller to determine which role the device is performing for a particular Connection Handle.	BR/EDR
Switch Role Command	1.1	The Switch Role command is used to switch master and slave roles of the devices on either side of a connection.	BR/EDR
Role Change Event	1.1	The Role Change event is used to indicate that the current BR/EDR Controller role related to the particular connection has been changed.	BR/EDR
Link Supervision Timeout Changed Event	2.1 + EDR	The Link Supervision Timeout Changed event is used to notify the slave's Host when the link supervision timeout value has changed	BR/EDR

Table 3.11: Piconet structure

3.12 QUALITY OF SERVICE

The quality of service group of commands and events allows the configuration of links to allow for quality of service parameters to be specified.

Name	Vers.	Summary description	Supported Controllers
Flow Specification Command	1.2	The Flow Specification command is used to specify the flow parameters for the traffic carried over the ACL connection identified by the Connection Handle.	BR/EDR
Flow Specification Complete Event	1.2	The Flow Specification Complete event is used to inform the Host about the Quality of Service for the ACL connection the Controller is able to support.	BR/EDR
QoS Setup Command	1.1	The QoS Setup command is used to specify Quality of Service parameters for a Connection Handle.	BR/EDR
QoS Setup Complete Event	1.1	The QoS Setup Complete event is used to indicate that QoS is setup.	BR/EDR
QoS Violation Event	1.1	The QoS Violation event is used to indicate the Controller's Link Manager or PAL is unable to provide the current QoS requirement for the Handle.	All
Flush Command	1.1	The Flush command is used to discard all data that is currently pending for transmission in the Controller for the specified Connection Handle.	BR/EDR
Flush Occurred Event	1.1	The Flush Occurred event is used to indicate that, for the specified Handle, the data to be transmitted has been discarded.	All
Enhanced Flush Command	2.1 + EDR	The Enhanced Flush Command is used to discard specific packets currently pending for transmission in the Controller for the specified Handle. This command takes a parameter specifying the type of packets to be flushed.	All
Enhanced Flush Complete Event	2.1 + EDR	The Enhanced Flush Complete event is used to indicate that an Enhanced Flush is complete.	All

Table 3.12: Quality of service

Name	Vers.	Summary description	Supported Controllers
Read Automatic Flush Timeout Command	1.1	The Read Automatic Flush Timeout will read the value for the Flush Timeout configuration parameter for the specified Connection Handle. The Flush Timeout parameter is only used for ACL connections.	BR/EDR
Write Automatic Flush Timeout Command	1.1	The Write Automatic Flush Timeout will write the value for the Flush Timeout configuration parameter for the specified Connection Handle. The Flush Timeout parameter is only used for ACL connections.	BR/EDR
Read Failed Contact Counter Command	1.1	The Read Failed Contact Counter will read the value for the Failed Contact Counter configuration parameter for a particular connection to another device.	All
Reset Failed Contact Counter Command	1.1	The Reset Failed Contact Counter will reset the value for the Failed Contact Counter configuration parameter for a particular connection to another device.	All
Read Num Broadcast Retransmissions Command	1.1	The Read Num Broadcast Retransmissions command will read the parameter value for the Number of Broadcast Retransmissions for the BR/EDR Controller.	BR/EDR
Write Num Broadcast Retransmissions Command	1.1	The Write Num Broadcast Retransmissions command will write the parameter value for the Number of Broadcast Retransmissions for the BR/EDR Controller.	BR/EDR
Flow Spec Modify Command	3.0 + HS	The Flow Spec Modify command modifies certain parameters of an existing Logical Link's Flow Spec on this AMP Controller	AMP
Flow Spec Modify Complete Event	3.0 + HS	The Flow Spec Modify Complete event indicates to the Host that a Flow Spec Modify command has been completed.	AMP
Read Best Effort Flush Timeout Command	3.0 + HS	The Read Best Effort Flush Timeout command returns the last value written with the Write Best Effort Flush Timeout command.	AMP

Table 3.12: Quality of service

Name	Vers.	Summary description	Supported Controllers
Write Best Effort Flush Timeout Command	3.0 + HS	The Write Best Effort Flush Timeout command configures the AMP device with a maximum time to attempt to transmit any given frame on the Best Effort logical link.	802.11 PAL only

Table 3.12: Quality of service

3.13 PHYSICAL LINKS

The physical links commands and events allows configuration of the physical link.

Name	Vers.	Summary description	Supported Controllers
Read Link Supervision Timeout Command	1.1	The Read Link Supervision Timeout command will read the value for the Link Supervision Timeout configuration parameter for the device. This parameter is used by the Controller to determine link loss.	All
Write Link Supervision Timeout Command	1.1	The Write Link Supervision Timeout command will write the value for the Link Supervision Timeout configuration parameter for the device. This parameter is used by the Controller to determine link loss.	All
Link Supervision Timeout Changed Event	2.1 + EDR	The Link Supervision Timeout Event indicates that the remote device changed the Link Supervision Timeout.	BR/EDR
Read AFH Channel Assessment Mode Command	1.2	The Read AFH Channel Assessment Mode command will read the value for the AFH Channel Classification Mode parameter. This value is used to enable or disable the Controller's channel assessment scheme.	BR/EDR

Table 3.13: Physical links

Name	Vers.	Summary description	Supported Controllers
Write AFH Channel Assessment Mode Command	1.2	The Write AFH Channel Assessment Mode command will write the value for the Channel Classification Mode configuration parameter. This value is used to enable or disable the Controller's channel assessment scheme.	BR/EDR
Set AFH Host Channel Classification Command	1.2	The Set AFH Host Channel Classification command allows the Host to specify a channel classification based on its "local information".	BR/EDR
Change Connection Packet Type Command	1.1	The Change Connection Packet Type command is used to change which packet types can be used for a connection that is currently established.	BR/EDR
Connection Packet Type Changed Event	1.1	The Connection Packet Type Changed event is used to indicate the completion of the process of the Link Manager changing the packet type mask used for the specified Connection Handle.	BR/EDR
Read Local AMP_ASSOC Command	3.0 + HS	The Read Local AMP_ASSOC command will return a fragment of the AMP_ASSOC structure, which contains AMP specific information for this AMP Controller.	AMP
Write Remote AMP_ASSOC Command	3.0 + HS	The Write Remote AMP_ASSOC command allows the Host to write a fragment of the AMP_ASSOC structure, which contains AMP specific information for the AMP Controller.	AMP
Short Range Mode Command	3.0 + HS	Short Range Mode command is used to notify the AMP that the peer may be at close enough range to require modification of AMP transmission power level.	802.11 PAL only
Short Range Mode Change Complete Event	3.0 + HS	Short Range Mode Change Complete event is used to indicate completion of any tasks relating to establishment of short range mode.	802.11 PAL only

Table 3.13: Physical links

3.14 HOST FLOW CONTROL

The Host flow control group of commands and events allows flow control to be used towards the Host.

Name	Vers.	Summary description	Supported Controllers
Host Buffer Size Command	1.1	The Host Buffer Size command is used by the Host to notify the Controller about its buffer sizes for ACL and synchronous data. The Controller will segment the data to be transmitted from the Controller to the Host, so that data contained in HCI Data Packets will not exceed these sizes.	BR/EDR
Set Event Mask Command	1.1	The Set Event Mask command is used to control which events are generated by the HCI for the Host.	All
Set Event Filter Command	1.1	The Set Event Filter command is used by the Host to specify different event filters. The Host may issue this command multiple times to request various conditions for the same type of event filter and for different types of event filters.	All
Set Controller To Host Flow Control Command	1.1	The Set Controller To Host Flow Control command is used by the Host to turn flow control on or off in the direction from the Controller to the Host.	BR/EDR
Host Number Of Completed Packets Command	1.1	The Host Number Of Completed Packets command is used by the Host to indicate to the Controller when the Host is ready to receive more HCI packets for any Connection Handle.	All
Data Buffer Overflow Event	1.1	The Data Buffer Overflow event is used to indicate that the Controller's data buffers have overflowed, because the Host has sent more packets than allowed.	All
Read Synchronous Flow Control Enable Command	1.1	The Read Synchronous Flow Control Enable command provides the ability to read the Synchronous Flow Control Enable setting. By using this setting, the Host can decide if the Controller will send Number Of Completed Packets events for Synchronous Connection Handles.	BR/EDR

Table 3.14: Controller flow control.

Name	Vers.	Summary description	Supported Controllers
Write Synchronous Flow Control Enable Command	1.1	The Write Synchronous Flow Control Enable command provides the ability to write the Synchronous Flow Control Enable setting. By using this setting, the Host can decide if the Controller will send Number Of Completed Packets events for Synchronous Connection Handles.	BR/EDR
Set Event Mask Page 2 Command	3.0 + HS	The Set Event Mask Page 2 command is used to control which events are generated by the HCI for the Host.	AMP

Table 3.14: Controller flow control.

3.15 LINK INFORMATION

The link information group of commands and events allows information about a link to be read.

Name	Vers.	Summary description	Supported Controllers
Read LMP Handle Command	1.2	The Read LMP Handle command will read the current LMP Handle associated with the Connection Handle.	BR/EDR
Read Transmit Power Level Command	1.1	The Read Transmit Power Level command will read the values for the Transmit Power Level parameter for the specified Connection Handle.	BR/EDR
Read Link Quality Command	1.1	The Read Link Quality command will read the value for the Link Quality for the specified Connection Handle.	All
Read RSSI Command	1.1	The Read RSSI command will read the value for the Received Signal Strength Indication (RSSI) for a Connection Handle to another BR/EDR Controller.	All
Read Clock Offset Command	1.1	The Read Clock Offset command allows the Host to read the clock offset of remote BR/EDR Controllers.	BR/EDR
Read Clock Offset Complete Event	1.1	The Read Clock Offset Complete event is used to indicate the completion of the process of the LM obtaining the Clock offset information.	BR/EDR

Table 3.15: Link information

Name	Vers.	Summary description	Supported Controllers
Read Clock Command	1.2	The Read Clock command will read an estimate of a piconet or the local Bluetooth Clock.	BR/EDR
Read AFH Channel Map Command	1.2	The Read AFH Channel Map command will read the current state of the channel map for a connection.	BR/EDR
Read Local AMP Info Command	3.0 + HS	The Read Local AMP Info command returns information about this AMP Controller.	AMP
AMP Status Change Event	3.0 + HS	The AMP Status Change event can occur at any time, after initial Read Local AMP_Info request, the Controller detects a change has occurred regarding status.	AMP
Read Enhanced Transmit Power Level Command	3.0 + HS	The Read Enhanced Transmit Power Level command will read the values for the GFSK, DQPSK and 8DPSK Transmit Power Level parameters for the specified Connection Handle.	BR/EDR

Table 3.15: Link information

3.16 AUTHENTICATION AND ENCRYPTION

The authentication and encryption group of commands and events allows authentication of a remote device and then encryption of the link to one or more remote devices.

Name	Vers.	Summary description	Supported Controllers
Link Key Request Event	1.1	The Link Key Request event is used to indicate that a Link Key is required for the connection with the device specified in BD_ADDR.	BR/EDR
Link Key Request Reply Command	1.1	The Link Key Request Reply command is used to reply to a Link Key Request event from the BR/EDR Controller, and specifies the Link Key stored on the Host to be used as the link key for the connection with the other BR/EDR Controller specified by BD_ADDR.	BR/EDR

Table 3.16: Authentication and encryption

Name	Vers.	Summary description	Supported Controllers
Link Key Request Negative Reply Command	1.1	The Link Key Request Negative Reply command is used to reply to a Link Key Request event from the BR/EDR Controller if the Host does not have a stored Link Key for the connection with the other BR/EDR Controller specified by BD_ADDR.	BR/EDR
PIN Code Request Event	1.1	The PIN Code Request event is used to indicate that a PIN code is required to create a new link key for a connection.	BR/EDR
PIN Code Request Reply Command	1.1	The PIN Code Request Reply command is used to reply to a PIN Code Request event from the Controller and specifies the PIN code to use for a connection.	BR/EDR
PIN Code Request Negative Reply Command	1.1	The PIN Code Request Negative Reply command is used to reply to a PIN Code Request event from the Controller when the Host cannot specify a PIN code to use for a connection.	BR/EDR
Link Key Notification Event	1.1	The Link Key Notification event is used to indicate to the Host that a new Link Key has been created for the connection with the BR/EDR Controller specified in BD_ADDR.	BR/EDR
Authentication Requested Command	1.1	The Authentication Requested command is used to establish authentication between the two devices associated with the specified Connection Handle.	BR/EDR
Authentication Complete Event	1.1	The Authentication Complete event occurs when authentication has been completed for the specified connection.	BR/EDR
Set Connection Encryption Command	1.1	The Set Connection Encryption command is used to enable and disable the link level encryption.	BR/EDR
Encryption Change Event	1.1	The Encryption Change event is used to indicate that the change in the encryption has been completed for the Connection Handle specified by the Connection Handle event parameter.	BR/EDR

Table 3.16: Authentication and encryption

Name	Vers.	Summary description	Supported Controllers
Change Connection Link Key Command	1.1	The Change Connection Link Key command is used to force both devices of a connection associated to the Connection Handle, to generate a new link key.	BR/EDR
Change Connection Link Key Complete Event	1.1	The Change Connection Link Key Complete event is used to indicate that the change in the Link Key for the Connection Handle specified by the Connection Handle event parameter had been completed.	BR/EDR
Master Link Key Command	1.1	The Master Link Key command is used to force both BR/EDR Controllers of a connection associated to the Connection Handle to use the temporary link key of the Master device or the regular link keys.	BR/EDR
Master Link Key Complete Event	1.1	The Master Link Key Complete event is used to indicate that the change in the temporary Link Key or in the semi-permanent link keys on the Bluetooth master side has been completed.	BR/EDR
Read PIN Type Command	1.1	The Read PIN Type command is used for the Host to read the value that is specified to indicate whether the Host supports variable PIN or only fixed PINs.	BR/EDR
Write PIN Type Command	1.1	The Write PIN Type command is used for the Host to specify whether the Host supports variable PIN or only fixed PINs.	BR/EDR
Read Stored Link Key Command	1.1	The Read Stored Link Key command provides the ability to read whether one or more link keys are stored in the Controller.	BR/EDR
Return Link Keys Event	1.1	The Return Link Keys event is used to return stored link keys after a Read Stored Link Key command is used.	BR/EDR
Write Stored Link Key Command	1.1	The Write Stored Link Key command provides the ability to write one or more link keys to be stored in the Controller.	BR/EDR

Table 3.16: Authentication and encryption

Name	Vers.	Summary description	Supported Controllers
Delete Stored Link Key Command	1.1	The Delete Stored Link Key command provides the ability to remove one or more of the link keys stored in the Controller.	BR/EDR
Create New Unit Key Command	1.1	The Create New Unit Key command is used to create a new unit key.	BR/EDR
Refresh Encryption Key Command	2.1 + EDR	The Refresh Encryption Key command s used by the Host to cause the Controller to refresh the encryption key by pausing and resuming encryption	BR/EDR
Encryption Key Refresh Complete Event	2.1 + EDR	The Encryption Key Refresh Complete event is used to indicate to the Host that the encryption key was refreshed on the given Connection_Handle any time encryption is paused and then resumed.	BR/EDR
IO Capability Request Reply	2.1 + EDR	The IO Capability_Request_Reply command is used to reply to an IO Capability Request event from the controller, and specifies the current I/O capabilities of the Host.	BR/EDR
User Confirmation Request Reply Command	2.1 + EDR	The User Confirmation Request Reply command is used to reply to a User Confirmation Request event and indicates that the user selected "yes". It is also used when the Host has no input and no output capabilities.	BR/EDR
User Confirmation Request Negative Reply Command	2.1 + EDR	The User Confirmation Request Negative Reply command is used to reply to a User Confirmation Request event and indicates that the user selected "no". This command will terminate Secure Simple Pairing.	BR/EDR
User Passkey Request Reply Command	2.1 + EDR	The User Passkey Request Reply command is used to reply to a User Passkey Request event and specifies the Numeric_Value (passkey) entered by the user to be used in the Secure Simple Pairing process.	BR/EDR

Table 3.16: Authentication and encryption

Name	Vers.	Summary description	Supported Controllers
User Passkey Request Negative Reply Command	2.1 + EDR	The User Passkey Request Negative Reply command is used to reply to a User Passkey Request event and indicates the host could not provide a passkey. This command will terminate Simple Pairing.	BR/EDR
Remote OOB Data Request Reply Command	2.1 + EDR	The Remote OOB Data Request Reply command is used to reply to a Remote OOB Data Request event with the C and R values received via an OOB transfer from a remote BR/EDR Controller identified by BD ADDR.	BR/EDR
Remote OOB Data Request Negative Reply Command	2.1 + EDR	The Remote OOB Data Request Negative Reply command is used to reply to a Remote OOB Data Request event that the Host does not have the C and R	BR/EDR
Read Simple Pairing Mode Command	2.1 + EDR	This command reads the Simple Pairing mode setting in the BR/EDR Controller.	BR/EDR
Write Simple Pairing Mode Command	2.1 + EDR	This command writes the Simple Pairing mode setting in the BR/EDR Controller.	BR/EDR
Read Local OOB Data Command	2.1 + EDR	This command is used to obtain a Simple Pairing Hash C and Simple Pairing Randomizer R which are intended to be transferred to a remote device using an OOB mechanism.	BR/EDR
Send Keypress Notification Command	2.1 + EDR	This command is used during the Passkey Entry protocol by a device with KeyboardOnly IO capabilities. It is used by a Host to inform the remote device when keys have been entered or erased.	BR/EDR
Read Encryption Key Size Command	v3.0 + HS	The Read Encryption Key Size command is used to read the encryption key size on a given Connection_Handle.	BR/EDR

Table 3.16: Authentication and encryption

3.17 TESTING

The testing group of commands and events allows a device to be placed into a special testing mode to allow for testing to be performed.

Name	Vers.	Summary description	Supported Controllers
Read Loopback Mode Command	1.1	The Read Loopback Mode command will read the value for the setting of the BR/EDR Controllers' Loopback Mode. The setting of the Loopback Mode will determine the path of information.	BR/EDR
Write Loopback Mode Command	1.1	The Write Loopback Mode will write the value for the setting of the BR/EDR Controllers Loopback Mode. The setting of the Loopback Mode will determine the path of information.	BR/EDR
Loopback Command Event	1.1	The Loopback Command event is used to loop back all commands that the Host sends to the BR/EDR Controller with some exceptions.	BR/EDR
Enable Device Under Test Mode Command	1.1	The Enable Device Under Test Mode command will allow the local Controller to enter test mode via LMP test commands. The Host issues this command when it wants the local device to be the DUT for the Testing scenarios as described in the Bluetooth Test Mode document.	All
Write Simple Pairing Debug Mode Command	2.1 + EDR	This command configures the BR/EDR Controller to use a predefined Diffie Hellman private key for Simple Pairing to enable debug equipment to monitor the encrypted connection.	BR/EDR
AMP Receiver Report Event	3.0 + HS	The AMP_Receiver_Report shall be sent from the AMP to the tester via the AMP_Test_Manager at the interval configured by the Enable_AMP_Receiver_Reports command.	AMP

Table 3.17: Testing

Name	Vers.	Summary description	Supported Controllers
AMP Start Test Event	3.0 + HS	The AMP Start Test event shall be generated when the AMP_Test_Command has completed and the first data is ready to be sent or received	AMP
AMP Test Command	3.0 + HS	The AMP Test command is used to configure and start a test. This command shall be only valid in AMP Test Mode.	AMP
AMP Test End Command	3.0 + HS	The AMP Test End command is used to stop any test scenario which is in progress. This command shall only be used in AMP Test Mode when a test is in progress	AMP
AMP Test End Event	3.0 + HS	The AMP Test End Event shall be generated to indicate that the AMP has transmitted or received the number of frames/bursts configured.	AMP
Enable AMP Receiver Reports Command	3.0 + HS	The Enable AMP Receiver Reports command is used to enable and disable the reporting of frames received.	AMP

Table 3.17: Testing

3.18 ALPHABETICAL LIST OF COMMANDS AND EVENTS

Commands/Events	Group
AMP Receiver Report Event	Testing
AMP Start Test Event	Testing
AMP Status Change Event	Link Information
AMP Test Command	Testing
AMP Test End Command	Testing
AMP Test End Event	Testing
Accept Connection Request Command	Connection Setup
Accept Logical Link Command	Connection Setup
Accept Physical Link Command	Connection Setup
Accept Synchronous Connection Request Command	Connection Setup
Authentication Complete Event	Authentication and Encryption
Authentication Requested Command	Authentication and Encryption
Change Connection Link Key Command	Authentication and Encryption
Change Connection Link Key Complete Event	Authentication and Encryption
Change Connection Packet Type Command	Physical Links
Channel Selected Event	Connection Setup
Command Complete Event	Generic Events
Command Status Event	Generic Events
Connection Complete Event	Connection Setup
Connection Packet Type Changed Event	Physical Links
Connection Request Event	Connection Setup
Create Connection Cancel Command	Connection Setup
Create Connection Command	Connection Setup
Create New Unit Key Command	Authentication and Encryption
Create Logical Link Command	Connection Setup
Create Physical Link Command	Connection Setup
Data Buffer Overflow Event	Host Flow Control
Delete Stored Link Key Command	Authentication and Encryption
Disconnect Command	Connection Setup
Disconnection Complete Event	Connection Setup

Table 3.18: Alphabetical list of commands and events.

Commands/Events	Group
Disconnect Logical Link Command	Connection Setup
Disconnection Logical Link Complete Event	Connection Setup
Disconnect Physical Link Command	Connection Setup
Disconnection Physical Link Complete Event	Connection Setup
Enable AMP Receiver Reports Command	Testing
Enable Device Under Test Mode Command	Testing
Encryption Change Event	Authentication and Encryption
Encryption Key Refresh Complete	Authentication and Encryption
Enhanced Flush Command	Quality of Service
Enhanced Flush Complete Event	Quality of Service
Exit Park State Command	Connection State
Exit Periodic Inquiry Mode Command	Device Discovery
Exit Sniff Mode Command	Connection State
Extended Inquiry Result Event	Device Discovery
Flow Spec Modify Command	Quality of Service
Flow Spec Modify Complete Event	Quality of Service
Flow Specification Command	Quality of Service
Flow Specification Complete Event	Quality of Service
Flush Command	Quality of Service
Flush Occurred Event	Quality of Service
Hardware Error Event	Generic Events
Hold Mode Command	Connection State
Host Buffer Size Command	Host Flow Control
Host Number Of Completed Packets Command	Host Flow Control
Inquiry Cancel Command	Device Discovery
Inquiry Command	Device Discovery
Inquiry Complete Event	Device Discovery
Inquiry Result Event	Device Discovery
Inquiry Result with RSSI Event	Device Discovery
Link Key Notification Event	Authentication and Encryption
Link Key Request Event	Authentication and Encryption
Link Key Request Negative Reply Command	Authentication and Encryption

Table 3.18: Alphabetical list of commands and events.

Commands/Events	Group
Link Key Request Reply Command	Authentication and Encryption
Logical Link Cancel Command	Connection State
Logical Link Complete Event	Connection State
Loopback Command Event	Testing
Master Link Key Command	Authentication and Encryption
Master Link Key Complete Event	Authentication and Encryption
Max Slots Change Event	Connection State
Mode Change Event	Connection State
Number Of Completed Data Blocks Event	Controller Flow Control
Number Of Completed Packets Event	Controller Flow Control
Page Scan Repetition Mode Change Event	Connection Setup
Park State Command	Connection State
Periodic Inquiry Mode Command	Device Discovery
Physical Link Complete Event	Connection State
Physical Link Loss Early Warning Event	Connection State
Physical Link Recovery Event	Connection State
PIN Code Request Event	Authentication and Encryption
PIN Code Request Negative Reply Command	Authentication and Encryption
PIN Code Request Reply Command	Authentication and Encryption
QoS Setup Command	Quality of Service
QoS Setup Complete Event	Quality of Service
QoS Violation Event	Quality of Service
Read AFH Channel Assessment Mode Command	Physical Links
Read AFH Channel Map Command	Link Information
Read Authentication Enable Command	Authentication and Encryption
Read Automatic Flush Timeout Command	Quality of Service
Read BD_ADDR Command	Controller Information
Read Best Effort Flush Timeout Command	Quality of Service
Read Buffer Size Command	Controller Flow Control
Read Class of Device Command	Controller Information
Read Clock Command	Link Information
Read Clock Offset Command	Link Information

Table 3.18: Alphabetical list of commands and events.

Commands/Events	Group
Read Clock Offset Complete Event	Link Information
Read Connection Accept Timeout Command	Connection Setup
Read Current IAC LAP Command	Controller Information
Read Data Block Size Command	Controller Flow Control
Read Default Link Policy Settings Command	Connection State
Read Default Erroneous Data Reporting	Controller Configuration
Read Encryption Key Size Command	Authentication and Encryption
Read Encryption Mode Command	Authentication and Encryption
Read Enhanced Transmit Power Level Command	Link Information
Read Extended Inquiry Response Command	Controller Configuration
Read Failed Contact Counter Command	Quality of Service
Read Flow Control Mode Command	Controller Flow Control
Read Hold Mode Activity Command	Connection State
Read Inquiry Mode Command	Device Discovery
Read Inquiry Scan Activity Command	Device Discovery
Read Inquiry Scan Type Command	Device Discovery
Read Link Policy Settings Command	Connection State
Read Link Quality Command	Link Information
Read Link Supervision Timeout Command	Physical Links
Read LMP Handle Command	Link Information
Read Local AMP ASSOC Command	Physical Links
Read Local AMP Info Command	Link Information
Read Local Extended Features Command	Controller Information
Read Local Name Command	Controller Configuration
Read Local Supported Commands Command	Controller Information
Read Local Supported Features Command	Controller Information
Read Local Version Information Command	Controller Information
Read Logical Link Accept Timeout Command	Connection Setup
Read Loopback Mode Command	Testing
Read Num Broadcast Retransmissions Command	Quality of Service
Read Number Of Supported IAC Command	Controller Information
Read Page Scan Activity Command	Connection Setup

Table 3.18: Alphabetical list of commands and events.

Commands/Events	Group
Read Page Scan Type Command	Connection Setup
Read Page Timeout Command	Connection Setup
Read PIN Type Command	Authentication and Encryption
Read Location Data Command	Controller Information
Read Remote Extended Features Command	Remote Information
Read Remote Extended Features Complete Event	Remote Information
Read Remote Supported Features Command	Remote Information
Read Remote Supported Features Complete Event	Remote Information
Read Remote Version Information Command	Remote Information
Read Remote Version Information Complete Event	Remote Information
Read RSSI Command	Link Information
Read Scan Enable Command	Controller Information
Read Stored Link Key Command	Authentication and Encryption
Read Synchronous Flow Control Enable Command	Host Flow Control
Read Transmit Power Level Command	Link Information
Read Voice Setting Command	Synchronous Connections
Refresh Encryption Key Command	Authentication and Encryption
Reject Connection Request Command	Connection Setup
Reject Synchronous Connection Request Command	Connection Setup
Remote Name Request Cancel Command	Remote Information
Remote Name Request Command	Remote Information
Remote Name Request Complete Event	Remote Information
Reset Command	Device Setup
Reset Failed Contact Counter Command	Quality of Service
Return Link Keys Event	Authentication and Encryption
Role Change Event	Piconet Structure
Role Discovery Command	Piconet Structure
Set AFH Host Channel Classification Command	Physical Links
Set Connection Encryption Command	Authentication and Encryption
Set Controller To Host Flow Control Command	Host Flow Control
Set Event Filter Command	Host Flow Control
Set Event Mask Command	Host Flow Control

Table 3.18: Alphabetical list of commands and events.

Commands/Events	Group
Set Event Mask Page 2 Command	Controller Flow Control
Setup Synchronous Connection Command	Synchronous Connections
Short Range Mode Command	Connection Setup
Short Range Mode Change Complete Event	Connection Setup
Sniff Mode Command	Connection State
Sniff Subrating Command	Connection State
Sniff Subrating Event	Connection State
Switch Role Command	Piconet Structure
Synchronous Connection Changed Event	Synchronous Connections
Synchronous Connection Complete Event	Synchronous Connections
Write AFH Channel Assessment Mode Command	Physical Links
Write Authentication Enable Command	Authentication and Encryption
Write Automatic Flush Timeout Command	Quality of Service
Write Best Effort Flush Timeout Command	Quality of Service
Write Class of Device Command	Controller Information
Write Connection Accept Timeout Command	Connection Setup
Write Current IAC LAP Command	Controller Information
Write Default Link Policy Settings Command	Connection State
Write Default Erroneous Data Reporting	Controller Configuration
Write Extended Inquiry Response Command	Controller Configuration
Write Flow Control Mode Command	Controller Flow Control
Write Hold Mode Activity Command	Connection State
Write Inquiry Mode Command	Device Discovery
Write Inquiry Scan Activity Command	Device Discovery
Write Inquiry Scan Type Command	Device Discovery
Write Link Policy Settings Command	Connection State
Write Link Supervision Timeout Command	Physical Links
Write Local Name Command	Controller Information
Write Location Data Command	Controller Information
Write Logical Link Accept Timeout Command	Connection Setup
Write Loopback Mode Command	Testing
Write Num Broadcast Retransmissions Command	Quality of Service

Table 3.18: Alphabetical list of commands and events.

Commands/Events	Group
Write Page Scan Activity Command	Connection Setup
Write Page Scan Type Command	Connection Setup
Write Page Timeout Command	Connection Setup
Write PIN Type Command	Authentication and Encryption
Write Remote AMP ASSOC Command	Physical Links
Write Scan Enable Command	Controller Information
Write Stored Link Key Command	Authentication and Encryption
Write Synchronous Flow Control Enable Command	Host Flow Control
Write Voice Setting Command	Synchronous Connections

Table 3.18: Alphabetical list of commands and events.

4 HCI FLOW CONTROL

Flow control for data shall be used in the direction from the Host to the Controller to avoid overflowing the Controller data buffers with ACL data destined for a remote device (using a Connection Handle) that is not responding. The Host manages the data buffers of the Controller. For BR/EDR Controllers, packet based flow control is the default. For AMP Controllers, data block based data flow control is the default for ACL traffic.

Flow control for data moving from the Controller to the Host may be used in BR/EDR Controllers in accordance with Section 4.2.

Command flow control is covered in Section 4.4 and Section 4.5.

4.1 HOST TO CONTROLLER DATA FLOW CONTROL

Two methods of data flow control are defined: 'packet-based' flow control and 'data-block-based' flow control. Selection of the data flow control mechanism is performed with the Write Flow Control Mode command (see Section 7.3.73).

4.1.1 Packet-based Data Flow Control

When the packet based flow control mechanism is enabled, on initialization, the Host shall issue the Read Buffer Size command. Two of the return parameters of this command determine the maximum size of HCI ACL and synchronous Data Packets (excluding header) sent from the Host to the Controller. There are also two additional return parameters that specify the total number of HCI ACL and synchronous Data Packets that the Controller may have waiting for transmission in its buffers.

When there is at least one connection to another device, or when in local loopback mode, the Controller shall use the Number Of Completed Packets event to control the flow of data from the Host. This event contains a list of Connection Handles and a corresponding number of HCI Data Packets that have been completed (transmitted, flushed, or looped back to the Host) since the previous time the event was returned (or since the connection was established, if the event has not been returned before for a particular Connection Handle).

Based on the information returned in this event, and the return parameters of the Read Buffer Size command that specify the total number of HCI ACL and synchronous Data Packets that can be stored in the Controller, the Host decides for which Connection Handles the following HCI Data Packets should be sent.

Every time it has sent an HCI Data Packet, the Host shall assume that the free buffer space for the corresponding link type (ACL, SCO or eSCO) in the Controller has decreased by one HCI Data Packet.

Each Number Of Completed Packets event received by the Host provides information about how many HCI Data Packets have been completed (transmitted or flushed) for each Connection Handle since the previous Number Of Completed Packets event was sent to the Host. It can then calculate the actual current buffer usage.

When the Controller has completed one or more HCI Data Packet(s) it shall send a Number Of Completed Packets event to the Host, until it finally reports that all the pending HCI Data Packets have been completed. The frequency at which this event is sent is manufacturer specific.

Note: The Number Of Completed Packets events will not report on synchronous Connection Handles if Synchronous Flow Control is disabled. (See Read Synchronous Flow Control Enable Command, and Write Synchronous Flow Control Enable Command)

For each individual Handle, the data shall be sent to the Controller in HCI Data Packets in the order in which it was created in the Host. The Controller shall also transmit data on the air that is received from the Host for a given Handle in the same order as it is received from the Host.

Data that is received on the air from another device shall, for the corresponding Connection Handle, be sent in HCI Data Packets to the Host in the same order as it is received. This means the scheduling shall be decided separately for each Handle basis. For each individual Handle, the order of the data shall not be changed from the order in which the data has been created.

4.1.2 Data-Block-Based Data Flow Control

When the data-block-based flow control mechanism is enabled, on initialization the Host shall issue the Read Data Block Size Command. Two of the return parameters of this command determine the maximum size of HCI ACL Data Packets (excluding header) sent from the Host to the Controller. Two additional return parameters specify the total number of HCI ACL Data Packets that the Controller may have waiting for transmission in its buffers.

When there is at least one Logical Link to another AMP the Controller shall use the Number Of Completed Data Blocks event to control the flow of data from the Host. This event contains a list of Handles and a corresponding number of HCI Data Packets that have been completed (transmitted or flushed) since the previous time the event was returned (or since the link was established, if the event has not been returned before for a particular Handle).

Based on the information returned in this event, and the return parameters of the Read Data Block Size command that specify the total number of HCI ACL Data Packets that can be stored in the Controller, the Host decides for which Handles the following HCI Data Packets should be sent.

Every time it has sent an HCI Data Packet, the Host shall assume that the free buffer space for the corresponding ACL link type in the Controller has decreased by one HCI Data Packet.

Each Number Of Completed Data Blocks event received by the Host provides information about how many HCI Data Packets have been completed (transmitted or flushed) for each Handle since the previous Number Of Completed Data Blocks event was sent to the Host. It can then calculate the actual current buffer usage.

When the Controller has completed one or more HCI Data Packet(s) it shall send a Number Of Completed Data Blocks event to the Host until it finally reports that all the pending HCI Data Packets have been completed. The frequency at which this event is sent is manufacturer specific.

For each individual Handle, the data must be sent to the Controller in HCI Data Packets in the order in which it was created in the Host. The Controller shall also transmit data for a given Handle in the same order as it is received from the Host.

Data that is received shall be sent in HCI Data Packets to the Host in the same order as it is received. This means the scheduling shall be decided separately for each Handle basis.

4.2 CONTROLLER TO HOST DATA FLOW CONTROL

In some implementations, flow control may also be necessary in the direction from the BR/EDR Controller to the Host. The Set Host Controller To Host Flow Control command can be used to turn flow control on or off in that direction. For AMP Controllers, Controller to Host data flow control is provided by the HCI physical transport or software equivalent.

On initialization, the Host uses the Host Buffer Size command to notify the Controller about the maximum size of HCI ACL and synchronous Data Packets sent from the Controller to the Host. The command also contains two additional command parameters to notify the BR/EDR Controller about the total number of ACL and synchronous Data Packets that can be stored in the data buffers of the Host.

The Host uses the Host Number Of Completed Packets command in exactly the same way as the BR/EDR Controller uses the Number Of Completed Packets event as was previously described in this section.

The Host Number Of Completed Packets command is a special command for which no command flow control is used, and which can be sent anytime there is a connection or when in local loopback mode. The command also has no event after the command has completed. This makes it possible for the flow control to work in exactly the same way in both directions, and the flow of normal commands will not be disturbed.

4.3 DISCONNECTION BEHAVIOR

When the Host receives a Disconnection Complete, Disconnection Physical Link Complete or Disconnection Logical Link Complete event, the Host shall assume that all unacknowledged HCI Data Packets that have been sent to the Controller for the returned Handle have been flushed, and that the corresponding data buffers have been freed. The BR/EDR Controller does not have to notify the Host about this in a Number Of Completed Packets event, nor does the AMP Controller have to notify the Host about this in a Number Of Completed Data Blocks event.

If flow control is also enabled in the direction from the Controller to the Host, the Controller may, after it has sent a Disconnection Complete event, assume that the Host will flush its data buffers for the sent Handle when it receives the Disconnection Complete event. The Host does not have to notify the BR/EDR Controller about this in a Host Number Of Completed Packets command.

4.4 COMMAND FLOW CONTROL

On initial power-on, and after a reset, the Host shall send a maximum of one outstanding HCI Command Packet until a Command Complete or Command Status event has been received.

The Command Complete and Command Status events contain a parameter called Num HCI Command Packets, which indicates the number of HCI Command Packets the Host is currently allowed to send to the Controller. The Controller may buffer one or more HCI command packets, but the Controller shall start performing the commands in the order in which they are received. The Controller can start performing a command before it completes previous commands. Therefore, the commands do not always complete in the order they are started.

To indicate to the Host that the Controller is ready to receive HCI command packets, the Controller may generate a Command Complete event with the Command Opcode 0x0000, and the Num HCI Command Packets event parameter is set to 1 or more. Command Opcode 0x0000 is a NOP (No OPeration), and can be used to change the number of outstanding HCI command packets that the Host can send. The Controller may generate a Command Complete event with the Num HCI Command Packets event parameter set to zero to inform Host it must stop sending commands.

For most commands, a Command Complete event shall be sent to the Host when the Controller completes the command. Some commands are executed in the background and do not return a Command Complete event when they have been completed. Instead, the Controller shall send a Command Status event back to the Host when it has begun to execute the command. When the actions associated with the command have finished, an event that is associated with the command shall be sent by the Controller to the Host.

If the command does not begin to execute (for example, if there was a parameter error or the command is currently not allowed), the Command Status event shall be returned with the appropriate error code in the Status parameter, and the event associated with the sent command shall not be returned.

4.5 COMMAND ERROR HANDLING

If an error occurs for a command for which a Command Complete event is returned, the Return Parameters field may not contain all the return parameters specified for the command. The Status parameter, which explains the error reason and which is the first return parameter, shall always be returned. If there is a Handle parameter or a BD_ADDR parameter right after the Status parameter, this parameter shall also be returned so that the Host can identify to which instance of a command the Command Complete event belongs. In this case, the Handle or BD_ADDR parameter shall have exactly the same value as that in the corresponding command parameter. It is implementation specific whether more parameters will be returned in case of an error.

The above also applies to commands that have associated command specific completion events with a status parameter in their completion event, with three exceptions. The first two exceptions are the Connection Complete and the Synchronous Connection Complete events. On failure, for these two events only, the second parameter, Connection_Handle, is not valid and the third parameter, BD_ADDR, is valid for identification purposes. The third exception is the Logical Link Complete event. On failure, for this event, the second parameter (Logical_Link_Handle) is not valid but the third parameter (Physical_Link_Handle) is valid for identification purposes. The validity of other parameters is likewise implementation specific for failed commands in this group.

Note: The BD_ADDR return parameter of the command Read BD_ADDR is not used to identify to which instance of the Read BD ADDR command the Command Complete event belongs. It is optional for the Controller to return this parameter in case of an error.

5 HCI DATA FORMATS

5.1 INTRODUCTION

The HCI provides a uniform command method of accessing Controller capabilities. The HCI Link commands provide the Host with the ability to control the link layer connections to other BR/EDR Controllers. For the BR/EDR Controller, these commands typically involve the Link Manager (LM) to exchange LMP commands with remote BR/EDR Controllers. For details see "Link Manager Protocol Specification" on page 205 [Part C]. For AMP Controllers, these commands typically involve the AMP PAL. For details see appropriate PAL specification (see [Vol 5 Part A], Section 2).

The HCI Policy commands are used to affect the behavior of the local and remote LM. These Policy commands provide the Host with methods of influencing how the LM manages the piconet. The Controller & Baseband, Informational, and Status commands provide the Host access to various registers in the Controller.

HCI commands may take different amounts of time to be completed. Therefore, the results of commands will be reported back to the Host in the form of an event. For example, for most HCI commands the Controller will generate the Command Complete event when a command is completed. This event contains the return parameters for the completed HCI command. For enabling the Host to detect errors on the HCI-Transport Layer, there needs to be a timeout between the transmission of the Host's command and the reception of the Controller's response (e.g. a Command Complete or Command Status event). Since the maximum response timeout is strongly dependent on the HCI-Transport Layer used, it is recommended to use a default value of one second for this timer. This amount of time is also dependent on the number of commands unprocessed in the command queue.

5.2 DATA AND PARAMETER FORMATS

- All values are in Binary and Hexadecimal Little Endian formats unless otherwise noted
- In addition, all parameters which can have negative values must use 2's complement when specifying values
- Arrayed parameters are specified using the following notation: ParameterA[i]. If more than one set of arrayed parameters are specified (e.g. ParameterA[i], ParameterB[i]), then the order of the parameters are as follows: ParameterA[0], ParameterB[0], ParameterA[1], ParameterB[1], ParameterA[2], ParameterB[2], … ParameterA[n], ParameterB[n]
- Unless noted otherwise, all parameter values are sent and received in Little Endian format (i.e. for multi-octet parameters the rightmost (Least Signification Octet) is transmitted first)

- All command and event parameters that are not-arrayed and all elements in an arrayed parameter have fixed sizes (an integer number of octets). The parameters and the size of each not arrayed parameter (or of each element in an arrayed parameter) contained in a command or an event is specified for each command or event. The number of elements in an arrayed parameter is not fixed.
- Where bit strings are specified, the low order bit is the right hand bit, e.g. 0 is the low order bit in '10'.
- Values or parameters marked as Reserved for Future Use, shall be set to 0 unless explicitly stated otherwise on transmission, and shall be ignored on reception. Parameter values or opcodes that an implementation does not know how to interpret shall be ignored, and the operation that is being attempted shall be completed with the correct signaling. The host or controller shall not stop functioning because of receiving a reserved value.

5.3 HANDLES

Three types of handles are used to identify logical channels between the Host and a Controller: Connection Handles, Logical Link Handles, and Physical Link Handles.

5.3.1 BR/EDR Controller Handles

Connection Handles are used to identify logical channels between the Host and BR/EDR Controller. Connection Handles are assigned by the BR/EDR Controller when a new logical link is created, using the Connection Complete or Synchronous Connection Complete events. Broadcast Connection Handles are handled differently, and are described below.

The first time the Host sends an HCI Data Packet with Broadcast_Flag set to 01b (active slave broadcast) or 10b (parked slave broadcast) after a power-on or a reset, the value of the Connection Handle parameter must be a value which is not currently assigned by the Host Controller. The Host must use different Connection Handles for active broadcast and piconet broadcast.

The BR/EDR Controller must then continue to use the same connection Handles for each type of broadcast until a reset is made. Note: The Host Controller must not send a Connection Complete event containing a new Connection_Handle that it knows is used for broadcast.

Note: In some situations, it may happen that the Host Controller sends a Connection Complete event before having interpreted a Broadcast packet received from the Host, and that the Connection_Handles of both Connection Complete event and HCI Data packet are the same. This conflict has to be avoided as follows:

If a Connection Complete event is received containing one of the Connection Handles used for broadcast, the Host has to wait before sending any packets

for the new connection until it receives a Number Of Completed Packets event indicating that there are no pending broadcast packets belonging to the Connection Handle. In addition, the Host must change the Connection_Handle used for the corresponding type of broadcast to a Connection_Handle which is currently not assigned by the Host Controller.

This Connection_Handle must then be used for all the following broadcasts of that type until a reset is performed or the same conflict situation happens again. However, this will occur very rarely.

The Host Controller must, in the above conflict case, be able to distinguish between the Broadcast message sent by the Host and the new connection made (this could be even a new synchronous link) even though the Connection Handles are the same.

For an HCI Data Packet sent from the Host Controller to the Host where the Broadcast_Flag is 01 or 10, the Connection_Handle parameter should contain the Connection Handle for the ACL connection to the master that sent the broadcast.

Note: Connection handles used for Broadcast do not identify an ACL point-to-point connection, so they must not be used in any command having a Connection_Handle parameter and they will not be returned in any event having a Connection_Handle parameter except the Number Of Completed Packets event.

5.3.2 AMP Controller Handles

AMP Controllers have two types of handles: Physical Link Handles and Logical Link Handles. For data, command and event operations between the Host and an AMP Controller, a Logical Link Handle is used where a Connection Handle is specified, unless a Physical Link Handle is explicitly specified.

A Physical Link is an association between the local Controller and a remote Controller. For any AMP Controller, there can be at most one Physical Link. The Host is responsible for allocating Physical Link Handles. A value of 0 shall not be used for a Physical Link Handle. Physical Links are created and removed explicitly, and encryption keys are established on a per Physical Link basis. The AMP may support one or more Physical Links (representing different remote devices) at any one time.

For each Physical Link, an AMP Controller provides zero or more Logical Links.

A Logical Link is an allocation of bandwidth or other resources for application level data transfer between the local AMP Controller and a remote AMP Controller. A Logical Link exists with respect to a specific Physical Link and the Controller ensures this Handle's uniqueness. The AMP shall support one or

more Logical Links (representing distinct resource allocations) over any one Physical Link.

5.4 EXCHANGE OF HCI-SPECIFIC INFORMATION

The Host Controller Transport Layer provides transparent exchange of HCI specific information. These transporting mechanisms provide the ability for the Host to send HCI commands, ACL data and synchronous data to the BR/EDR Controller, and HCI commands and ACL data to the AMP Controller. These transport mechanisms also provide the ability for the Host to receive HCI events, ACL data and synchronous data from the BR/EDR Controller, and HCI events and ACL data from the AMP Controller. Since the Host Controller Transport Layer provides transparent exchange of HCI-specific information, the HCI specification specifies the format of the commands, events, and data exchange between the Host and the Controller(s). The next sections specify the HCI packet formats.

5.4.1 HCI Command Packet

The HCI Command Packet is used to send commands to the Controller from the Host. The format of the HCI Command Packet is shown in Figure 5.1, and the definition of each field is explained below.

Controllers shall be able to accept HCI Command Packets with up to 255 bytes of data excluding the HCI Command Packet header.

Each command is assigned a 2 byte Opcode used to uniquely identify different types of commands. The Opcode parameter is divided into two fields, called the OpCode Group Field (OGF) and OpCode Command Field (OCF). The OGF occupies the upper 6 bits of the Opcode, while the OCF occupies the remaining 10 bits. The OGF of 0x3F is reserved for vendor-specific debug commands. The organization of the opcodes allows additional information to be inferred without fully decoding the entire Opcode.

Note: the OGF composed of all ‘ones’ has been reserved for vendor-specific debug commands. These commands are vendor-specific and are used during manufacturing, for a possible method for updating firmware, and for debugging.

Note: the OGF composed of all ‘zeros’ and an OCF or all ‘zeros’ is the NOP command. This command Opcode may be used in Command Flow Control. (See Section 4.4 on page 407.)

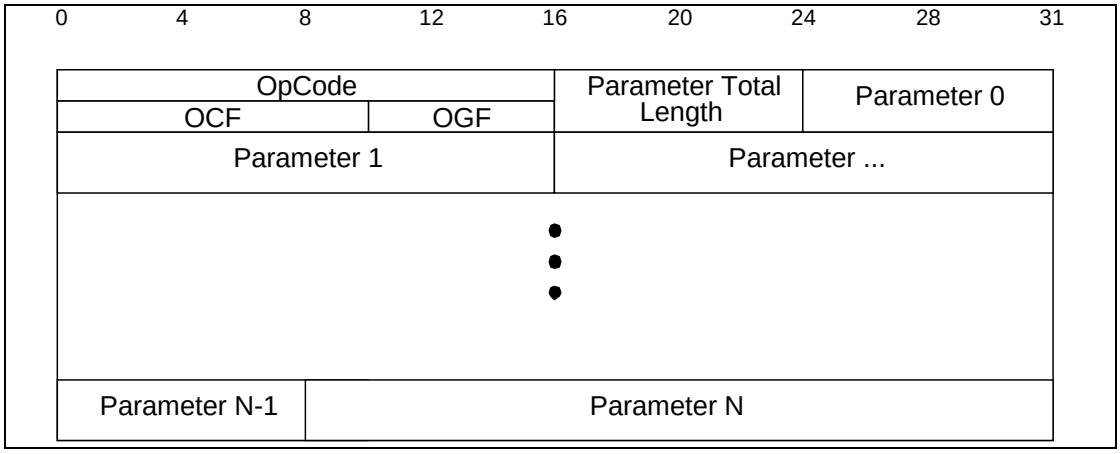

Figure 5.1: HCI Command Packet

Op_Code: *Size: 2 Octets*

Value	Parameter Description
0xXXXX	OGFRange (6 bits): 0x00-0x3F (0x3F reserved for vendor-specific debug commands) OCF Range (10 bits): 0x0000-0x03FF

Parameter_Total_Length: *Size: 1 Octet*

Value	Parameter Description
0xXX	Lengths of all of the parameters contained in this packet measured in octets. (N.B.: total length of parameters, not number of parameters)

Parameter 0 - N: *Size: Parameter Total Length*

Value	Parameter Description
0xXX	Each command has a specific number of parameters associated with it. These parameters and the size of each of the parameters are defined for each command. Each parameter is an integer number of octets in size.

5.4.2 HCI ACL Data Packets

HCI ACL Data Packets are used to exchange data between the Host and Controller. There are two types of HCI ACL Data Packets: Automatically-Flushable and Non-Automatically-Flushable. Automatically-Flushable HCI Data Packets are flushed based on the setting of an automatic flush timer (see Read Automatic Flush Timeout Command). Non-Automatically-Flushable HCI Data Packets are not controlled by the automatic flush timeout and shall not be automatically flushed. The format of the HCI ACL Data Packet is shown in Figure 5.2. The definition for each of the fields in the data packets is explained below.

All packets on an AMP logical link are affected by the automatic flush timer.

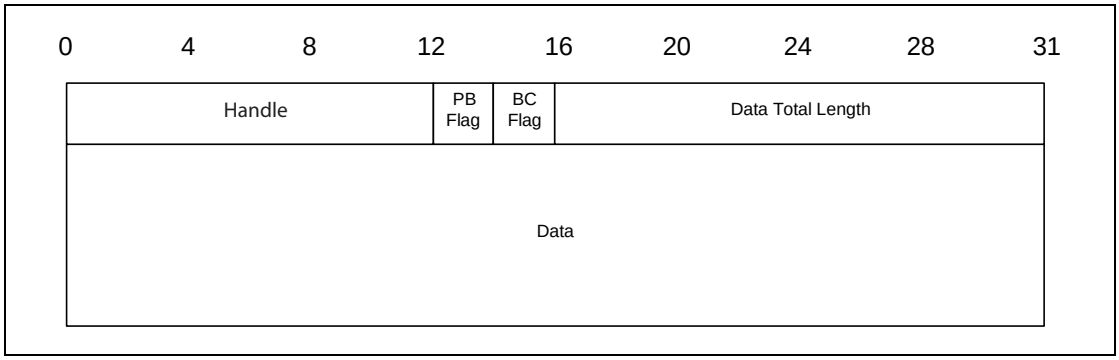

Figure 5.2: HCI ACL Data Packet

Handle: *Size: 12 Bits*

Value	Parameter Description
0xXXX	Connection Handle to be used for transmitting a data packet or segment over BR/EDR Controller. Logical Link Handle to be used for transmitting a data packet over an AMP Controller. On the receiving side (AMP Controller to Host), the least significant 8 bits of the Handle is the Physical Link Handle and the most significant 4 bits are reserved. (This is because certain AMP Controllers might not be able to provide the logical link context on the receiving side, and the Host does not require it.) Range: 0x000-0xEFF (0xF00 - 0xFFF Reserved for future use)

Flags: *Size: 2 Bits*

The Flag Bits consist of the Packet_Boundary_Flag and Broadcast_Flag. The Packet_Boundary_Flag is located in bit 4 and bit 5, and the Broadcast_Flag is located in bit 6 and bit 7 in the second octet of the HCI ACL Data packet.

Packet_Boundary_Flag: *Size: 2 Bits*

Value	Parameter Description

00	First non-automatically-flushable packet of Higher Layer Message (start of a non-automatically-flushable L2CAP PDU). Shall not be used with an AMP Controller.
01	Continuing fragment packet of Higher Layer Message. Shall not be used with an AMP Controller.
10	First automatically-flushable packet of Higher Layer Message (start of an automatically-flushable L2CAP PDU). Shall not be used with an AMP Controller.
11	A complete L2CAP PDU. Automatically flushable. Shall be used with an AMP Controller.

Broadcast_Flag (in packet from Host to Controller): *Size: 2 Bits*

Value	Parameter Description
00	No broadcast. Only point-to-point (this is the only valid option for AMPs).
01	Active Slave Broadcast: packet is sent to all active slaves (i.e. packet is usually not sent during park beacon slots), and it may be received by slaves in sniff mode or park state.
10	Parked Slave Broadcast: packet is sent to all slaves and all slaves in park state (i.e. packet is sent during park beacon slots if there are parked slaves), and it may be received by slaves in sniff mode.
11	Reserved for future use.

Broadcast_Flag (in packet from Controller to Host): *Size: 2 Bits*

Value	Parameter Description
00	Point-to-point
01	BR/EDR Packet received as a slave not in park state (either Active Slave Broadcast or Parked Slave Broadcast)
10	BR/EDR Packet received as a slave in park state (Parked Slave Broadcast)
11	Reserved for future use.

Note: active slave broadcast packets may be sent in park beacon slots.

Note: slaves in sniff mode may or may not receive a broadcast packet depending on whether they happen to be listening at sniff slots, when the packet is sent.

Data_Total_Length: *Size: 2 Octets*

Value	Parameter Description
0xXXXX	Length of data measured in octets.

5.4.3 HCI Synchronous Data Packets

HCI synchronous (SCO and eSCO) Data Packets are used to exchange synchronous data between the Host and Controller. The format of the synchronous Data Packet is shown in Figure 5.3. The definition for each of the fields in the data packets is explained below.

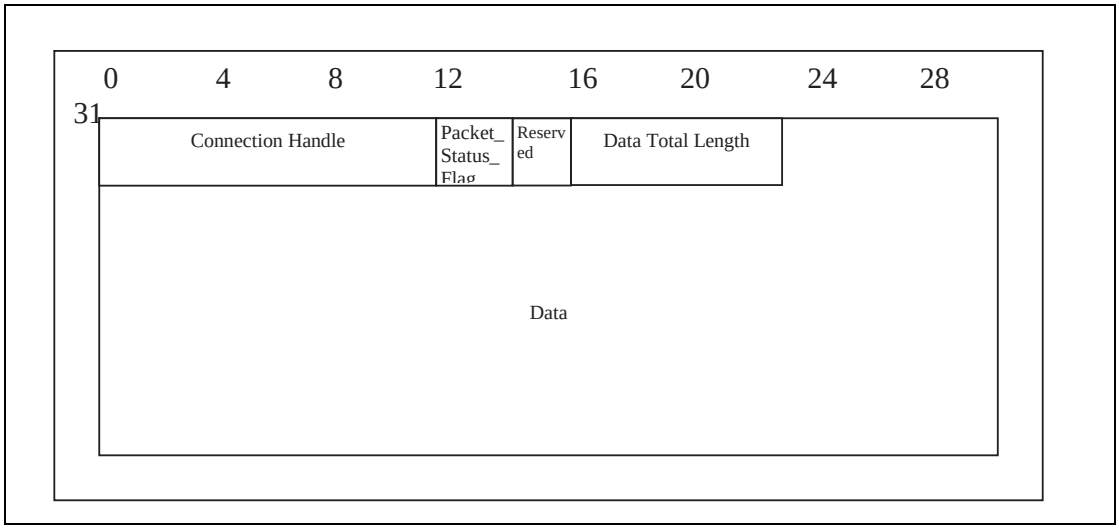

Figure 5.3: HCI Synchronous Data Packet

Connection_Handle: *Size: 12 Bits*

Value	Parameter Description
0xXXX	Connection handle to be used to for transmitting a synchronous data packet or segment. Range: 0x0000-0x0EFF (0x0F00- 0x0FFF Reserved for future use)

The Packet_Status_Flag bits consist of two bits, which are located from bit 4 to 5 in the second octet of the HCI Synchronous Data packet.

The Host shall set the Packet_Status_Flag bits to 00.

If the Erroneous_Data_Reporting parameter was set to disabled when the synchronous connection was created, the Controller shall set the Packet_Status_Flag bits to 00 and whether or not data is provided for cases when a valid (e)SCO packet was not received is unspecified.

If the Erroneous_Data_Reporting parameter was set to enabled when the synchronous connection was created, the controller shall set the Packet_Status_Flag according to the following table.

Packet_Status_Flag (in packets sent by the Controller) *Size: 2 Bits*

Value	Parameter Description

00	Correctly received data. The payload data belongs to received eSCO or SCO packets that the baseband marked as "good data".
01	Possibly invalid data. At least one eSCO packet has been marked by the baseband as "data with possible errors" and all others have been marked as "good data" in the eSCO interval(s) corresponding to the HCI Synchronous Data Packet.
10	No data received. All data from the baseband received during the (e)SCO interval(s) corresponding to the HCI Synchronous Data Packet have been marked as "lost data" by the baseband. The Payload data octets shall be set to 0.
11	Data partially lost. Not all, but at least one (e)SCO packet has been marked as "lost data" by the baseband in the (e)SCO intervals corresponding to the HCI Synchronous Data Packet. The payload data octets corresponding to the missing (e)SCO packets shall be set to 0.

Note: some HCI transports and/or controller implementations will align the HCI Synchronous Data Packets with the (e)SCO baseband packets such that data integrity can be explicitly marked in the Packet_Status_Flag. For HCI transports or Controller implementations that do not preserve this alignment, information in the Packet_Status_Flag may be ambiguous.

The Reserved Bits consist of two bits which are located from bit 6 to bit 7 in the second octet of the HCI Synchronous Data packet.

Reserved: *Size: 2 Bits*

Value	Parameter Description
XXXX	Reserved for future use.

Data_Total_Length: *Size: 1 Octet*

Value	Parameter Description
0xXX	Length of synchronous data measured in octets

5.4.4 HCI Event Packet

The HCI Event Packet is used by the Controller to notify the Host when events occur. The Host must be able to accept HCI Event Packets with up to 255 octets of data excluding the HCI Event Packet header. The format of the HCI Event Packet is shown in Figure 5.4, and the definition of each field is explained below.

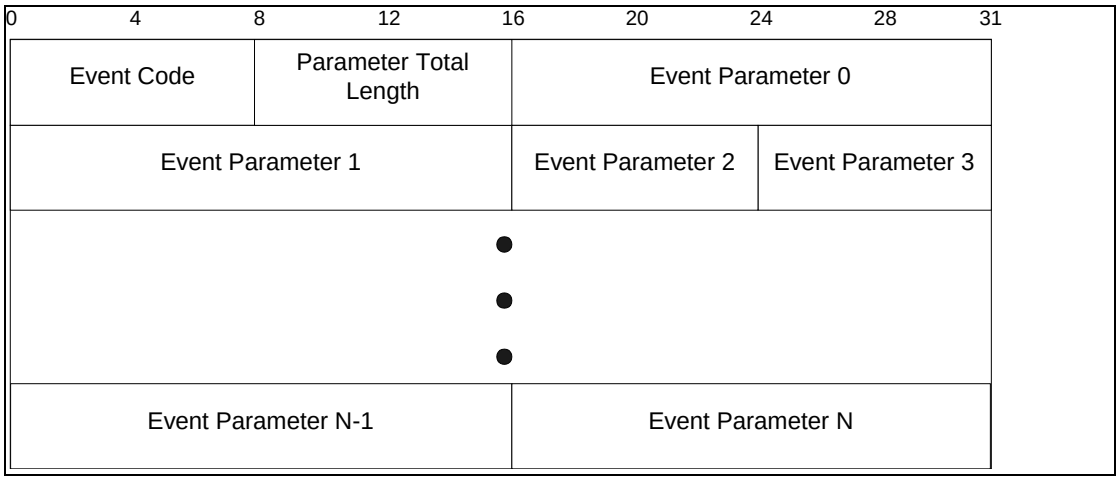

Figure 5.4: HCI Event Packet

Event_Code: *Size: 1 Octet*

Value	Parameter Description
0xXX	Each event is assigned a 1-Octet event code used to uniquely identify different types of events. Range: 0x00-0xFF (The event code 0xFF is reserved for the event code used for vendor-specific debug events.

Parameter_Total_Length: *Size: 1 Octet*

Value	Parameter Description
0xXX	Length of all of the parameters contained in this packet, measured in octets

Event_Parameter 0 - N: *Size: Parameter Total Length*

Value	Parameter Description
0xXX	Each event has a specific number of parameters associated with it. These parameters and the size of each of the parameters are defined for each event. Each parameter is an integer number of octets in size.

6 HCI CONFIGURATION PARAMETERS

6.1 SCAN ENABLE

The Scan_Enable parameter controls whether or not the BR/EDR Controller will periodically scan for page attempts and/or inquiry requests from other BR/EDR Controllers. If Page_Scan is enabled, then the device will enter page scan mode based on the value of the Page_Scan_Interval and Page_Scan_Window parameters. If Inquiry_Scan is enabled, then the BR/EDR Controller will enter Inquiry Scan mode based on the value of the Inquiry_Scan_Interval and Inquiry_Scan_
Window parameters.

Value	Parameter Description
0x00	No Scans enabled.
0x01	Inquiry Scan enabled. Page Scan always disabled.
0x02	Inquiry Scan disabled. Page Scan enabled.
0x03	Inquiry Scan enabled. Page Scan enabled.
0x04-0xFF	Reserved [0x04 limited page scan removed]

6.2 INQUIRY SCAN INTERVAL

The Inquiry_Scan_Interval configuration parameter defines the amount of time between consecutive inquiry scans. This is defined as the time interval from when the BR/EDR Controller started its last inquiry scan until it begins the next inquiry scan.

Value	Parameter Description
N = 0xXXXX	Size: 2 Octets Range: 0x0012 to 0x1000; only even values are valid Default: 0x1000 Mandatory Range: 0x0012 to 0x1000 Time = N * 0.625 msec Time Range: 11.25 to 2560 msec Time Default: 2.56 sec

6.3 INQUIRY SCAN WINDOW

The Inquiry_Scan_Window configuration parameter defines the amount of time for the duration of the inquiry scan. The Inquiry_Scan_Window can only be less than or equal to the Inquiry_Scan_Interval.

Value	Parameter Description
N = 0xXXXX	Size: 2 Octets Range: 0x0011 to 0x1000 Default: 0x0012 Mandatory Range: 0x0011 to Inquiry Scan Interval Time = N * 0.625 msec Time Range: 10.625 msec to 2560 msec Time Default: 11.25 msec

6.4 INQUIRY SCAN TYPE

The Inquiry_Scan_Type configuration parameter indicates whether inquiry scanning will be done using non-interlaced scan or interlaced scan. Currently, one mandatory inquiry scan type and one optional inquiry scan type are defined. For details, see the Baseband Specification, “Inquiry scan substate” on page 159 [Part B].

Value	Parameter Description
0x00	Mandatory: Standard Scan (default)
0x01	Optional: Interlaced Scan
0x02-0xFF	Reserved

6.5 INQUIRY MODE

The Inquiry_Mode configuration parameter indicates whether inquiry returns Inquiry Result events in the standard format, with RSSI, or with RSSI and extended inquiry response information.

Value	Parameter Description
0x00	Standard Inquiry Result event format
0x01	Inquiry Result format with RSSI
0x02	Inquiry Result with RSSI format or Extended Inquiry Result format
0x03-0xFF	Reserved

6.6 PAGE TIMEOUT

The Page_Timeout configuration parameter defines the maximum time the local Link Manager will wait for a baseband page response from the remote device at a locally initiated connection attempt. If this time expires and the remote BR/EDR Controller has not responded to the page at baseband level, the connection attempt will be considered to have failed.

Value	Parameter Description
N = 0xXXXX	Size: 2 Octets Range: 0x0001 to 0xFFFF Default: 0x2000 Mandatory Range: 0x0016 to 0xFFFF Time = N * 0.625 msec Time Range: 0.625 msec to 40.9 sec Time Default: 5.12 sec

6.7 CONNECTION ACCEPT TIMEOUT

The Connection_Accept_Timeout configuration parameter allows the BR/EDR Controller to automatically deny a connection request after a specified time period has occurred and the new connection is not accepted. The parameter defines the time duration from when the BR/EDR Controller sends a Connection Request event until the BR/EDR Controller will automatically reject an incoming connection.

The Connection_Accept_Timeout configuration parameter allows each AMP Controller to limit the duration of the HCI_Create_Physical_Link command or HCI_Accept_Physical_Link command it is locally serving. The parameter defines the maximum time duration for all physical connection setup activities that occur between the HCI_Create_Physical_Link command or HCI_Accept_Physical_Link command and the corresponding Physical_Link_Compete event (including all authentication activity) before the AMP Controller will automatically reject the physical link setup.

Value	Parameter Description
N = 0xXXXX	Size: 2 Octets Range: 0x0001 to 0xB540 Default: 0x1F40 Mandatory Range: 0x00A0 to 0xB540 Time = N * 0.625 msec Time Range: 0.625 msec to 29 sec Time Default: BR/EDR 5 sec AMP type dependent

6.8 PAGE SCAN INTERVAL

The Page_Scan_Interval configuration parameter defines the amount of time between consecutive page scans. This time interval is defined from when the Controller started its last page scan until it begins the next page scan.

Value	Parameter Description
N = 0xXXXX	Size: 2 Octets Range: 0x0012 to 0x1000; only even values are valid Default: 0x0800 Mandatory Range: 0x0012 to 0x1000 Time = N * 0.625 msec Time Range: 11.25 msec to 2560 msec Time Default: 1.28 sec

6.9 PAGE SCAN WINDOW

The Page_Scan_Window configuration parameter defines the amount of time for the duration of the page scan. The Page_Scan_Window can only be less than or equal to the Page_Scan_Interval.

Value	Parameter Description
N = 0xXXXX	Size: 2 Octets Range: 0x0011 to 0x1000 Default: 0x0012 Mandatory Range: 0x0011 to Page Scan Interval Time = N * 0.625 msec Time Range: 10.625 msec to Page Scan Interval Time Default: 11.25 msec

6.10 PAGE SCAN PERIOD MODE (DEPRECATED)

Every time an inquiry response message is sent, the BR/EDR Controller will start a timer (T_mandatory_pscan), the value of which is dependent on the Page_Scan_Period_Mode. As long as this timer has not expired, the BR/EDR Controller will use the mandatory page scan mode for all following page scans.

Note: the timer T_mandatory_pscan will be reset at each new inquiry response. For details see the “Baseband Specification” on page 57 [Part B].

Value	Parameter Description
0x00	P0
0x01	P1
0x02	P2
0x03-0xFF	Reserved.

6.11 PAGE SCAN TYPE

The Page_Scan_Type parameter indicates whether inquiry scanning will be done using non-interlaced scan or interlaced scan. For details, see the Baseband Specification, “Page Scan Substate” on page 149 [Part B].

Value	Parameter Description
0x00	Mandatory: Standard Scan (default)
0x01	Optional: Interlaced Scan
0x02-0xFF	Reserved

6.12 VOICE SETTING

The Voice_Setting parameter controls all the various settings for voice connections. The input settings apply to all voice connections, and **cannot** be set for individual voice connections. The Voice_Setting parameter controls the configuration for voice connections: Input Coding, Air coding format, input data format, Input sample size, and linear PCM parameter. The air coding format bits in the Voice_Setting command parameter specify which air coding format the local device requests. The air coding format bits do not specify which air coding format(s) the local device accepts when a remote device requests an air coding format. This is determined by the hardware capabilities of the local BR/EDR Controller.

Value	Parameter Description
00XXXXXXXX	Input Coding: Linear
01XXXXXXXX	Input Coding: μ-law Input Coding
10XXXXXXXX	Input Coding: A-law Input Coding
11XXXXXXXX	Reserved for Future Use
XX00XXXXXX	Input Data Format: 1’s complement
XX01XXXXXX	Input Data Format: 2’s complement
XX10XXXXXX	Input Data Format: Sign-Magnitude
XX11XXXXXX	Input Data Format: Unsigned
XXXX0XXXXX	Input Sample Size: 8-bit (only for linear PCM)
XXXX1XXXXX	Input Sample Size: 16-bit (only for linear PCM)
XXXXXnnnXX	Linear_PCM_Bit_Pos: # bit positions that MSB of sample is away from starting at MSB (only for Linear PCM).
XXXXXXXX00	Air Coding Format: CVSD
XXXXXXXX01	Air Coding Format: μ-law
XXXXXXXX10	Air Coding Format: A-law

Value	Parameter Description
XXXXXXXX11	Air Coding Format: Transparent Data

6.13 PIN TYPE

The PIN Type configuration parameter determines whether the Link Manager assumes that the Host supports variable PIN codes or a fixed PIN code. The host controller uses the PIN-type information during pairing.

Value	Parameter Description
0x00	Variable PIN.
0x01	Fixed PIN.

6.14 LINK KEY

The Controller can store a limited number of link keys for other BR/EDR Controllers. Link keys are shared between two BR/EDR Controllers, and are used for all security transactions between the two BR/EDR Controllers. A Host device may have additional storage capabilities, which can be used to save additional link keys to be reloaded to the BR/EDR Controller when needed. A Link Key is associated with a BD_ADDR.

Value	Parameter Description
0xXXXXXXXXXX XXXXXXXXXX XXXXXXXXXX	Link Key for an associated BD_ADDR.

6.15 FAILED CONTACT COUNTER

The Failed_Contact_Counter records the number of consecutive incidents in which either the local or remote device did not respond after the flush timeout had expired, and the L2CAP PDU that was currently being transmitted was automatically ‘flushed’. When this occurs, the Failed_Contact_Counter is incremented by 1.

The Failed Contact Counter is maintained for each Connection Handle and Logical Link Handle.

The Failed_Contact_Counter for a connection is reset to zero on the following conditions:

1. When a new connection is established
2. When the Failed_Contact_Counter is > zero and an L2CAP PDU is acknowledged for that connection
3. When the Reset_Failed_Contact_Counter command has been issued

Value	Parameter Description
0xXXXX	Number of consecutive failed contacts for a connection corresponding to the Connection or Logical Link Handle.

6.16 HOLD MODE ACTIVITY

The Hold_Mode_Activity value is used to determine what activities should be suspended when the BR/EDR Controller is in hold mode. After the hold period has expired, the device will return to the previous mode of operation. Multiple hold mode activities may be specified for the Hold_Mode_Activity parameter by performing a bitwise OR operation of the different activity types. If no activities are suspended, then all of the current Periodic Inquiry, Inquiry Scan, and Page Scan settings remain valid during the Hold Mode. If the Hold_Mode_Activity parameter is set to Suspend Page Scan, Suspend Inquiry Scan, and Suspend Periodic Inquiries, then the device can enter a low-power state during the Hold Mode period, and all activities are suspended. Suspending multiple activities can be specified for the Hold_Mode_Activity parameter by performing a bitwise OR operation of the different activity types. The Hold Mode Activity is only valid if all connections are in Hold Mode.

Value	Parameter Description
0x00	Maintain current Power State.
0x01	Suspend Page Scan.
0x02	Suspend Inquiry Scan.
0x04	Suspend Periodic Inquiries.
0x08-0xFF	Reserved for Future Use.

6.17 LINK POLICY SETTINGS

The Link_Policy_Settings parameter determines the behavior of the local Link Manager when it receives a request from a remote Link Manager or it determines itself to change the master-slave role or to enter park state, hold, or sniff mode. The local Link Manager will automatically accept or reject such a request from the remote device, and may even autonomously request itself, depending on the value of the Link_Policy_Settings parameter for the corresponding Connection_Handle. When the value of the Link_Policy_Settings parameter is changed for a certain Connection_Handle, the new value will only be used for requests from a remote device or from the local Link Manager itself made after this command has been completed. By enabling each mode individually, the Host can choose any combination needed to support various modes of operation. Multiple LM policies may be specified for the Link_Policy_Settings parameter by performing a bitwise OR operation of the different activity types.

Note: The local BR/EDR Controller may be forced into hold mode (regardless of whether the local device is master or slave) by the remote device regardless of the value of the Link_Policy_Settings parameter. The forcing of hold mode can however only be done once the connection has already been placed into hold mode through an LMP request (the Link_Policy_Settings determine if requests from a remote device should be accepted or rejected). The forcing of hold mode can after that be done as long as the connection lasts regardless of the setting for hold mode in the Link_Policy_Settings parameter.

Note that the previous description implies that if the implementation in the remote device is a "polite" implementation that does not force another device into hold mode via LMP PDUs, then the Link_Policy_Settings will never be overruled.

Value	Parameter Description
0x0000	Disable All LM Modes Default
0x0001	Enable Role switch.
0x0002	Enable Hold Mode.
0x0004	Enable Sniff Mode.
0x0008	Enable Park State.
0x0008 – 0x8000	Reserved for Future Use.

6.18 FLUSH TIMEOUT

The Flush_Timeout configuration parameter is used for ACL connections on a BR/EDR Controller only. The Flush Timeout is defined in the Baseband specification section 7.6.3, “Flushing Payloads,” on page 145. This parameter allows automatically-flushable ACL packets to be automatically flushed without the Host device issuing a Flush command. This provides support for isochronous data, such as audio. Non-automatically-flushable ACL packets shall not be affected by this parameter (see HCI ACL Data Packets) providing support for both asynchronous and isochronous data on the same ACL connection. When the L2CAP packet that is currently being transmitted is automatically ‘flushed’, the Failed Contact Counter is incremented by one.

Note: Since for AMP Controllers a Flush Timeout value is maintained as part of the Extended Flow Specification for each logical link, the separate Flush Timeout configuration parameter is not used.

Value	Parameter Description
0	Timeout = ∞; No Automatic Flush
N = 0xXXXX	Size: 2 Octets Range: 0x0001 to 0x07FF Mandatory Range: 0x0002 to 0x07FF Time = N * 0.625 msec Time Range: 0.625 msec to 1279.375 msec

6.19 NUM BROADCAST RETRANSMISSIONS

Broadcast packets are not acknowledged and are unreliable. The Number of Broadcast Retransmissions parameter, N, is used to increase the reliability of a broadcast message by retransmitting the broadcast message multiple times. This sets the value N_{BC} in the baseband to one greater than the Num Broadcast Retransmissions value. (See Baseband Specification, Section 7.6.5, on page 146) This parameter should be adjusted as the link quality measurement changes.

Value	Parameter Description
N = 0xXX	N_{BC} = N + 1 Range 0x00-0xFE

6.20 LINK SUPERVISION TIMEOUT

The Link_Supervision_Timeout parameter is used by the Controller to monitor link loss. If, for any reason, no packets are received from that Handle (a Connection Handle for the BR/EDR Controller or the Physical Link Handle for an AMP Controller) for a duration longer than the Link_Supervision_Timeout, the connection is disconnected. For the BR/EDR Controller, the same timeout value is used for both synchronous and ACL connections for the device specified by the Connection Handle. For an AMP Controller, the timeout value is maintained for each physical link. Note: Some AMP Controllers may also have an early notification event (See Physical Link Loss Early Warning Event).

Note: Setting the Link_Supervision_Timeout to No Link_Supervision_Timeout (0x0000) on a BR/EDR Controller will disable the Link_Supervision_Timeout check for the specified Connection Handle. This makes it unnecessary for the master of the piconet to unpark and then park each BR/EDR Controller every ~40 seconds. By using the No Link_Supervision_Timeout setting, the scalability of the Park state is not limited.

Value	Parameter Description
0x0000	No Link_Supervision_Timeout. Shall not be used with AMP Controllers.
N = 0xXXXX	Size: 2 Octets Range: 0x0001 to 0xFFFF Default: 0x7D00 Mandatory Range: 0x0190 to 0xFFFF Time = N * 0.625 msec Time Range: 0.625 msec to 40.9 sec Time Default: BR/EDR 20 sec AMP 10 sec

6.21 SYNCHRONOUS FLOW CONTROL ENABLE

The Synchronous Flow Control Enable configuration parameter allows the Host to decide if the BR/EDR Controller will send Number Of Completed Packets events for synchronous Connection Handles. This setting allows the Host to enable and disable synchronous flow control.

Value	Parameter Description
0x00	Synchronous Flow Control is disabled. No Number of Completed Packets events will be sent from the BR/EDR Controller for synchronous Connection Handles.
0x01	Synchronous Flow Control is enabled. Number of Completed Packets events will be sent from the BR/EDR Controller for synchronous Connection Handles.

6.22 LOCAL NAME

The user-friendly Local Name provides the user the ability to distinguish one BR/EDR Controller from another. The Local Name configuration parameter is a UTF-8 encoded string with up to 248 octets in length. The Local Name configuration parameter will be null terminated (0x00) if the UTF-8 encoded string is less than 248 octets.

Note: The Local Name configuration parameter is a string parameter. Endianess does therefore not apply to the Local Name configuration parameter. The first octet of the name is received first.

Value	Parameter Description
	A UTF-8 encoded User Friendly Descriptive Name for the device. If the name contained in the parameter is shorter than 248 octets, the end of the name is indicated by a NULL octet (0x00), and the following octets (to fill up 248 octets, which is the length of the parameter) do not have valid values.

6.23 EXTENDED INQUIRY RESPONSE

The Extended Inquiry Response provides information about the local device in response to inquiry from remote devices. The configuration parameter has two parts, a significant part followed by a non-significant part. The non-significant part contains only zero octets. The length of the extended inquiry response configuration parameter is 240 octets. The data format of the significant part is defined in [Vol 3 Part C], Section 8.

Value	Parameter Description
	Information about the local device that will be sent in an extended inquiry response packet to remote devices during inquiry response.

6.24 ERRONEOUS DATA REPORTING

The Erroneous_Data_Reporting configuration parameter shall be used for SCO and eSCO connections only. This parameter determines if the BR/EDR Controller is required to provide data to the Host for every (e)SCO interval, with the Packet_Status_Flag in HCI Synchronous Data Packets set according to section 5.4.3, “HCI Synchronous Data Packets,” on page 416.

Value	Parameter Description
0x00	Erroneous data reporting disabled
0x01	Erroneous data reporting enabled.
0x02 - 0xFF	Reserved

6.25 CLASS OF DEVICE

The Class_of_Device parameter is used to indicate the capabilities of the local device to other devices.

Value	Parameter Description
0xXXXXXX	Class of Device for the device.

6.26 SUPPORTED COMMANDS

The Supported Commands configuration parameter lists which HCI commands the local controller supports. It is implied that if a command is listed as supported, the feature underlying that command is also supported.

The Supported Commands is a 64 octet bit field. If a bit is set to 1, then this command is supported.

Octet	Bit	Command Supported
0	0	Inquiry
	1	Inquiry Cancel
	2	Periodic Inquiry Mode
	3	Exit Periodic Inquiry Mode
	4	Create Connection
	5	Disconnect
	6	Add SCO Connection
	7	Cancel Create Connection
1	0	Accept Connection Request
	1	Reject Connection Request
	2	Link Key Request Reply
	3	Link Key Request Negative Reply
	4	PIN Code Request Reply
	5	PIN Code Request Negative Reply
	6	Change Connection Packet Type
	7	Authentication Request

Octet	Bit	Command Supported
2	0	Set Connection Encryption
	1	Change Connection Link Key
	2	Master Link Key
	3	Remote Name Request
	4	Cancel Remote Name Request
	5	Read Remote Supported Features
	6	Read Remote Extended Features
	7	Read Remote Version Information
3	0	Read Clock Offset
	1	Read LMP Handle
	2	Reserved
	3	Reserved
	4	Reserved
	5	Reserved
	6	Reserved
	7	Reserved
4	0	Reserved
	1	Hold Mode
	2	Sniff Mode
	3	Exit Sniff Mode
	4	Park State
	5	Exit Park State
	6	QoS Setup
	7	Role Discovery
5	0	Switch Role
	1	Read Link Policy Settings
	2	Write Link Policy Settings
	3	Read Default Link Policy Settings
	4	Write Default Link Policy Settings
	5	Flow Specification
	6	Set Event Mark
	7	Reset

Octet	Bit	Command Supported
6	0	Set Event Filter
	1	Flush
	2	Read PIN Type
	3	Write PIN Type
	4	Create New Unit Key
	5	Read Stored Link Key
	6	Write Stored Link Key
	7	Delete Stored Link Key
7	0	Write Local Name
	1	Read Local Name
	2	Read Connection Accept Timeout
	3	Write Connection Accept Timeout
	4	Read Page Timeout
	5	Write Page Timeout
	6	Read Scan Enable
	7	Write Scan Enable
8	0	Read Page Scan Activity
	1	Write Page Scan Activity
	2	Read Inquiry Scan Activity
	3	Write Inquiry Scan Activity
	4	Reserved
	5	Reserved
	6	Read Encryption Mode
	7	Write Encryption Mode
9	0	Read Class Of Device
	1	Write Class Of Device
	2	Read Voice Setting
	3	Write Voice Setting
	4	Read Automatic Flush Timeout
	5	Write Automatic Flush Timeout
	6	Read Num Broadcast Retransmissions
	7	Write Num Broadcast Retransmissions

Octet	Bit	Command Supported
10	0	Read Hold Mode Activity
	1	Write Hold Mode Activity
	2	Read Transmit Power Level
	3	Read Synchronous Flow Control Enable
	4	Write Synchronous Flow Control Enable
	5	Set Host Controller To Host Flow Control
	6	Host Buffer Size
	7	Host Number Of Completed Packets
11	0	Read Link Supervision Timeout
	1	Write Link Supervision Timeout
	2	Read Number of Supported IAC
	3	Read Current IAC LAP
	4	Write Current IAC LAP
	5	Read Page Scan Mode Period (deprecated)
	6	Write Page Scan Mode Period (deprecated)
	7	Read Page Scan Mode (deprecated)
12	0	Write Page Scan Mode (deprecated)
	1	Set AFH Channel Classification
	2	Reserved
	3	Reserved
	4	Read Inquiry Scan Type
	5	Write Inquiry Scan Type
	6	Read Inquiry Mode
	7	Write Inquiry Mode
13	0	Read Page Scan Type
	1	Write Page Scan Type
	2	Read AFH Channel Assessment Mode
	3	Write AFH Channel Assessment Mode
	4	Reserved
	5	Reserved
	6	Reserved
	7	Reserved

Octet	Bit	Command Supported
14	0	Reserved
	1	Reserved
	2	Reserved
	3	Read Local Version Information
	4	Reserved
	5	Read Local Supported Features
	6	Read Local Extended Features
	7	Read Buffer Size
15	0	Read Country Code [Deprecated]
	1	Read BD ADDR
	2	Read Failed Contact Count
	3	Reset Failed Contact Count
	4	Get Link Quality
	5	Read RSSI
	6	Read AFH Channel Map
	7	Read BD Clock
16	0	Read Loopback Mode
	1	Write Loopback Mode
	2	Enable Device Under Test Mode
	3	Setup Synchronous Connection
	4	Accept Synchronous Connection
	5	Reject Synchronous Connection
	6	Reserved
	7	Reserved
17	0	Read Extended Inquiry Response
	1	Write Extended Inquiry Response
	2	Refresh Encryption Key
	3	Reserved
	4	Sniff Subrating
	5	Read Simple Pairing Mode
	6	Write Simple Pairing Mode
	7	Read Local OOB Data

Octet	Bit	Command Supported
18	0	Read Inquiry Response Transmit Power
	1	Write Inquiry Transmit Power Level
	2	Read Default Erroneous Data Reporting
	3	Write Default Erroneous Data Reporting
	4	Reserved
	5	Reserved
	6	Reserved
	7	IO Capability Request Reply
19	0	User Confirmation Request Reply
	1	User Confirmation Request Negative Reply
	2	User Passkey Request Reply
	3	User Passkey Request Negative Reply
	4	Remote OOB Data Request Reply
	5	Write Simple Pairing Debug Mode
	6	Enhanced Flush
	7	Remote OOB Data Request Negative Reply
20	0	Reserved
	1	Reserved
	2	Send Keypress Notification
	3	IO Capabilities Response Negative Reply
	4	Read Encryption Key Size
	5	Reserved
	6	Reserved
	7	Reserved
21	0	Create Physical Link
	1	Accept Physical Link
	2	Disconnect Physical Link
	3	Create Logical Link
	4	Accept Logical Link
	5	Disconnect Logical Link
	6	Logical Link Cancel
	7	Flow Spec Modify

Octet	Bit	Command Supported
22	0	Read Logical Link Accept Timeout
	1	Write Logical Link Accept Timeout
	2	Set Event Mask Page 2
	3	Read Location Data
	4	Write Location Data
	5	Read Local AMP Info
	6	Read Local AMP_ASSOC
	7	Write Remote AMP_ASSOC
23	0	Read Flow Control Mode
	1	Write Flow Control Mode
	2	Read Data Block Size
	3	Reserved
	4	Reserved
	5	Enable AMP Receiver Reports
	6	AMP Test End
	7	AMP Test Command
24	0	Read Enhanced Transmit Power Level
	1	Reserved
	2	Read Best Effort Flush Timeout
	3	Write Best Effort Flush Timeout
	4	Short Range Mode
	5	Reserved
	6	Reserved
	7	Reserved

6.27 LOGICAL LINK ACCEPT TIMEOUT

The Logical_Link_Accept_Timeout configuration parameter allows the AMP Controller to automatically deny a logical link request after a specified time period has elapsed and the new logical link has not completed. The parameter defines the timeout duration, which includes all logical link setup activities that occur between the HCI_Create_Logical_Link or HCI_Accept_Logical_Link commands and the Logical_Link_Compete event. If these activities are not completed within the specified time, the AMP Controller will automatically reject the logical link set up.

Value	Parameter Description
N = 0xXXXX	Size: 2 Octets Range: 0x0001 to 0xB540 Default: 0x1F40 Mandatory Range: 0x00A0 to 0xB540 Time = N * 0.625 msec Time Range: 0.625 msec to 29 sec Time Default: AMP Type dependent

6.28 LOCATION DOMAIN AWARE

The Location_Domain_Aware parameter indicates if the transmitter has information about the current regulatory domain.

Location_Domain_Aware *Size 1 Octet*

Value	Parameter Description
0x00	Regulatory domain unknown
0x01	Regulatory domain known
0x02-0xFF	Reserved for future use

6.29 LOCATION DOMAIN

The Location_Domain parameter specifies the country or other location code if known.

Location_Domain *Size 1 Octet*

Value	Parameter Description
0xXXXX	Shall be set to "XX" (0x5858) for a non-country entity or when Location_Domain_Aware is set to regulatory domain unknown. When the regulatory domain is known, it shall be set according to the two Octet country code as defined in ISO 3166-1.[1]

1. ISO 3166-1-alpha-2 code elements (English), http://www.iso.org/iso/english_country_names_and_code_elements

6.30 LOCATION DOMAIN OPTIONS

The Location_Domain_Options parameter may specify additional information specific to that country, or that the location is not a single country.

Location_Domain_Options *Size: 1 Octet*

Values	Parameter Descriptions
	Single octet suffix:
0x20	"space" indicates that the code applies to the entire country
0x4F	"O" indicates for use outdoors only
0x49	"I" indicates for use indoors only
0x58	"X" indicates a non-country entity
Other values	Reserved for future use

The format of the Location_Domain_Options parameter is derived from IEEE 802.11-2007 Annex D "ASN.1 encoding of the MAC and PHY MIB."

6.31 LOCATION OPTIONS

The Location_Options parameter indicates if the transmitter has information about any options that may effect operation in different locations.

Location_Options: *Size: 1 Octet*

Bit	Value	Parameter Description
0	0	Not mains-powered
0	1	Mains powered
1-7		Reserved for future use

6.32 FLOW CONTROL MODE

The Flow_Control_Mode configuration parameter allows the Host to select the HCI Data flow control mode used by the Controller for ACL Data traffic.

Flow_Control_Mode: *Size: 1 Octet*

Value	Parameter Description
0x00	Packet based data flow control mode (**default** for a BR/EDR Controller)
0x01	Data block based data flow control mode (**default** for an AMP Controller)
0x02-0xFF	Reserved for future use

7 HCI COMMANDS AND EVENTS

7.1 LINK CONTROL COMMANDS

The Link Control commands allow a Controller to control connections to other BR/EDR Controllers. Some Link Control commands are used only with a BR/EDR Controller whereas other Link Control commands are used only with an AMP Controller.

In the BR/EDR Controller, when the Link Control commands are used, the Link Manager (LM) controls how the Bluetooth piconets and scatternets are established and maintained. These commands instruct the LM to create and modify link layer connections with Bluetooth remote devices, perform Inquiries of other BR/EDR Controllers in range, and other LMP commands.

In the AMP Controller, Link Control commands are used to create, modify and disconnect physical and logical links.

For the Link Control commands, the OGF is defined as 0x01.

7.1.1 Inquiry Command

Command	OCF	Command Parameters	Return Parameters
HCI_Inquiry	0x0001	LAP, Inquiry_Length, Num_Responses	

Description:

This command will cause the BR/EDR Controller to enter Inquiry Mode. Inquiry Mode is used to discover other nearby BR/EDR Controllers. The LAP input parameter contains the LAP from which the inquiry access code shall be derived when the inquiry procedure is made. The Inquiry_Length parameter specifies the total duration of the Inquiry Mode and, when this time expires, Inquiry will be halted. The Num_Responses parameter specifies the number of responses that can be received before the Inquiry is halted. A Command Status event is sent from the Controller to the Host when the Inquiry command has been started by the BR/EDR Controller. When the Inquiry process is completed, the Controller will send an Inquiry Complete event to the Host indicating that the Inquiry has finished. The event parameters of Inquiry Complete event will have a summary of the result from the Inquiry process, which reports the number of nearby BR/EDR Controllers that responded. When a BR/EDR Controller responds to the Inquiry message, an Inquiry Result event will occur to notify the Host of the discovery.

A device which responds during an inquiry or inquiry period should always be reported to the Host in an Inquiry Result event if the device has not been reported earlier during the current inquiry or inquiry period and the device has not been filtered out using the command Set_Event_Filter. If the device has

been reported earlier during the current inquiry or inquiry period, it may or may not be reported depending on the implementation (depending on if earlier results have been saved in the BR/EDR Controller and in that case how many responses that have been saved). It is recommended that the BR/EDR Controller tries to report a particular device only once during an inquiry or inquiry period.

Command Parameters:

LAP: *Size: 3 Octets*

Value	Parameter Description
0x9E8B00– 0X9E8B3F	This is the LAP from which the inquiry access code should be derived when the inquiry procedure is made; see Bluetooth Assigned Numbers.

Inquiry_Length: *Size: 1 Octet*

Value	Parameter Description
N = 0xXX	Maximum amount of time specified before the Inquiry is halted. Size: 1 octet Range: 0x01 – 0x30 Time = N * 1.28 sec Range: 1.28 – 61.44 Sec

Num_Responses: *Size: 1 Octet*

Value	Parameter Description
0x00	Unlimited number of responses.
0xXX	Maximum number of responses from the Inquiry before the Inquiry is halted. Range: 0x01 – 0xFF

Return Parameters:

None.

Event(s) generated (unless masked away):

A Command Status event is sent from the BR/EDR Controller to the Host when the BR/EDR Controller has started the Inquiry process. An Inquiry Result event will be created for each BR/EDR Controller which responds to the Inquiry message. In addition, multiple BR/EDR Controllers which respond to the Inquire message may be combined into the same event. An Inquiry Complete event is generated when the Inquiry process has completed.

Note: No Command Complete event will be sent by the BR/EDR Controller to indicate that this command has been completed. Instead, the Inquiry Complete

event will indicate that this command has been completed. No Inquiry Complete event will be generated for the canceled Inquiry process.

7.1.2 Inquiry Cancel Command

Command	OCF	Command Parameters	Return Parameters
HCI_Inquiry_Cancel	0x0002		Status

Description:

This command will cause the BR/EDR Controller to stop the current Inquiry if the BR/EDR Controller is in Inquiry Mode. This command allows the Host to interrupt the BR/EDR Controller and request the BR/EDR Controller to perform a different task. The command should only be issued after the Inquiry command has been issued, a Command Status event has been received for the Inquiry command, and before the Inquiry Complete event occurs.

Return Parameters:

Status: *Size: 1 Octet*

Value	Parameter Description
0x00	Inquiry_Cancel command succeeded.
0x01-0xFF	Inquiry_Cancel command failed. See “Error Codes” on page 335 [Part D] for a list of error codes and descriptions.

Event(s) generated (unless masked away):

When the Inquiry Cancel command has completed, a Command Complete event will be generated. No Inquiry Complete event will be generated for the canceled Inquiry process.

7.1.3 Periodic Inquiry Mode Command

Command	OCF	Command Parameters	Return Parameters
HCI_Periodic_ Inquiry_Mode	0x0003	Max_Period_Length, Min_Period_Length, LAP, Inquiry_Length, Num_Responses	Status

Description:

The Periodic_Inquiry_Mode command is used to configure the BR/EDR Controller to enter the Periodic Inquiry Mode that performs an automatic Inquiry. Max_Period_Length and Min_Period_Length define the time range between

two consecutive inquiries, from the beginning of an inquiry until the start of the next inquiry. The BR/EDR Controller will use this range to determine a new random time between two consecutive inquiries for each Inquiry. The LAP input parameter contains the LAP from which the inquiry access code shall be derived when the inquiry procedure is made. The Inquiry_Length parameter specifies the total duration of the InquiryMode and, when time expires, Inquiry will be halted. The Num_Responses parameter specifies the number of responses that can be received before the Inquiry is halted. This command is completed when the Inquiry process has been started by the BR/EDR Controller, and a Command Complete event is sent from the Controller to the Host. When each of the periodic Inquiry processes are completed, the Controller will send an Inquiry Complete event to the Host indicating that the latest periodic Inquiry process has finished. When a BR/EDR Controller responds to the Inquiry message an Inquiry Result event will occur to notify the Host of the discovery.

Note: Max_Period_Length > Min_Period_Length > Inquiry_Length

A device which responds during an inquiry or inquiry period should always be reported to the Host in an Inquiry Result event if the device has not been reported earlier during the current inquiry or inquiry period and the device has not been filtered out using the command Set_Event_Filter. If the device has been reported earlier during the current inquiry or inquiry period, it may or may not be reported depending on the implementation (depending on if earlier results have been saved in the BR/EDR Controller and in that case how many responses that have been saved). It is recommended that the BR/EDR Controller tries to report a particular device only once during an inquiry or inquiry period.

Command Parameters:

Max_Period_Length: *Size: 2 Octets*

Value	Parameter Description
N = 0xXXXX	Maximum amount of time specified between consecutive inquiries. Size: 2 octets Range: 0x03 – 0xFFFF Time = N * 1.28 sec Range: 3.84 – 83884.8 Sec 0.0 – 23.3 hours

Min_Period_Length: *Size: 2 Octets*

Value	Parameter Description
N = 0xXXXX	Minimum amount of time specified between consecutive inquiries. Size: 2 octets Range: 0x02 – 0xFFFE Time = N * 1.28 sec Range: 2.56 – 83883.52 Sec 0.0 – 23.3 hours

LAP: *Size: 3 Octets*

Value	Parameter Description
0x9E8B00– 0X9E8B3F	This is the LAP from which the inquiry access code should be derived when the inquiry procedure is made; see "Bluetooth Assigned Numbers"

Inquiry_Length: *Size: 1 Octet*

Value	Parameter Description
N = 0xXX	Maximum amount of time specified before the Inquiry is halted. Size: 1 octet Range: 0x01 – 0x30 Time = N * 1.28 sec Range: 1.28 – 61.44 Sec

Num_Responses: *Size: 1 Octet*

Value	Parameter Description
0x00	Unlimited number of responses.
0xXX	Maximum number of responses from the Inquiry before the Inquiry is halted. Range: 0x01 – 0xFF

Return Parameters:

Status: *Size: 1 Octet*

Value	Parameter Description
0x00	Periodic Inquiry Mode command succeeded.
0x01-0xFF	Periodic Inquiry Mode command failed. See "Error Codes" on page 335 [Part D] for a list of error codes and descriptions.

Event(s) generated (unless masked away):

The Periodic Inquiry Mode begins when the BR/EDR Controller sends the Command Complete event for this command to the Host. An Inquiry Result event will be created for each BR/EDR Controller which responds to the Inquiry message. In addition, multiple BR/EDR Controllers which response to the Inquiry message may be combined into the same event. An Inquiry Complete event is generated when each of the periodic Inquiry processes has completed. No Inquiry Complete event will be generated for the canceled Inquiry process.

7.1.4 Exit Periodic Inquiry Mode Command

Command	OCF	Command Parameters	Return Parameters
HCI_Exit_Periodic_Inquiry_Mode	0x0004		Status

Description:

The Exit Periodic Inquiry Mode command is used to end the Periodic Inquiry mode when the local device is in Periodic Inquiry Mode. If the BR/EDR Controller is currently in an Inquiry process, the Inquiry process will be stopped directly and the BR/EDR Controller will no longer perform periodic inquiries until the Periodic Inquiry Mode command is reissued.

Command Parameters:

None.

Return Parameters:

Status: *Size: 1 Octet*

Value	Parameter Description
0x00	Exit Periodic Inquiry Mode command succeeded.
0x01-0xFF	Exit Periodic Inquiry Mode command failed. See “Error Codes” on page 335 [Part D] for a list of error codes and descriptions.

Event(s) generated (unless masked away):

A Command Complete event for this command will occur when the local device is no longer in Periodic Inquiry Mode. No Inquiry Complete event will be generated for the canceled Inquiry process.

7.1.5 Create Connection Command

Command	OCF	Command Parameters	Return Parameters
HCI_Create_Connection	0x0005	BD_ADDR, Packet_Type, Page_Scan_Repetition_Mode, Reserved, Clock_Offset, Allow_Role_Switch	

Description:

This command will cause the Link Manager to create a connection to the BR/EDR Controller with the BD_ADDR specified by the command parameters. This command causes the local BR/EDR Controller to begin the Page process to create a link level connection. The Link Manager will determine how the new ACL connection is established. This ACL connection is determined by the current state of the device, its piconet, and the state of the device to be connected. The Packet_Type command parameter specifies which packet types the Link Manager shall use for the ACL connection. When sending HCI ACL Data Packets the Link Manager shall only use the packet type(s) specified by the Packet_Type command parameter or the always-allowed DM1 packet type. Multiple packet types may be specified for the Packet Type parameter by performing a bit-wise OR operation of the different packet types. The Link Manager may choose which packet type to be used from the list of acceptable packet types. The Page_Scan_Repetition_Mode parameter specifies the page scan repetition mode supported by the remote device with the BD_ADDR. This is the information that was acquired during the inquiry process. The Clock_Offset parameter is the difference between its own clock and the clock of the remote device with BD_ADDR. Only bits 2 through 16 of the difference are used, and they are mapped to this parameter as bits 0 through 14 respectively. A Clock_Offset_Valid_Flag, located in bit 15 of the Clock_Offset parameter, is used to indicate if the Clock Offset is valid or not. A Connection handle for this connection is returned in the Connection Complete event (see below). The Allow_Role_Switch parameter specifies if the local device accepts or rejects the request of a master-slave role switch when the remote device requests it at the connection setup (in the Role parameter of the Accept_Connection_Request command) (before the local Controller returns a Connection Complete event). For a definition of the different packet types see the “Baseband Specification” on page 57 [Part B].

Note: The Host should enable as many packet types as possible for the Link Manager to perform efficiently. However, the Host must not enable packet types that the local device does not support.

Command Parameters:

BD_ADDR: *Size: 6 Octets*

Value	Parameter Description
0xXXXXXXXXXXXX	BD_ADDR of the Device to be connected.

Packet_Type: *Size: 2 Octets*

Value	Parameter Description
0x0001	Reserved for future use.
0x0002	2-DH1 may not be used.
0x0004	3-DH1 may not be used.
0x0008[1]	DM1 may be used.
0x0010	DH1 may be used.
0x0020	Reserved for future use.
0x0040	Reserved for future use.
0x0080	Reserved for future use.
0x0100	2-DH3 may not be used.
0x0200	3-DH3 may not be used.
0x0400	DM3 may be used.
0x0800	DH3 may be used.
0x1000	2-DH5 may not be used.
0x2000	3-DH5 may not be used.
0x4000	DM5 may be used.
0x8000	DH5 may be used.

1. This bit will be interpreted as set to 1 by Bluetooth V1.2 or later controllers.

Page_Scan_Repetition_Mode: *Size: 1 Octet*

Value	Parameter Description
0x00	R0
0x01	R1
0x02	R2
0x03 – 0xFF	Reserved.

Reserved: *Size: 1 Octet*

Value	Parameter Description
0x00	Reserved, must be set to 0x00. See “Page Scan Mode” on page 734.

Clock_Offset: *Size: 2 Octets*

Bit format	Parameter Description
Bit 14-0	Bit 16-2 of CLKslave-CLKmaster.
Bit 15	Clock_Offset_Valid_Flag Invalid Clock Offset = 0 Valid Clock Offset = 1

Allow_Role_Switch: *Size: 1 Octet*

Value	Parameter Description
0x00	The local device will be a master, and will not accept a role switch requested by the remote device at the connection setup.
0x01	The local device may be a master, or may become a slave after accepting a role switch requested by the remote device at the connection setup.
0x02-0xFF	Reserved for future use.

Return Parameters:

None.

Event(s) generated (unless masked away):

When the BR/EDR Controller receives the Create Connection command, the BR/EDR Controller sends the Command Status event to the Host. In addition, when the LM determines the connection is established, the BR/EDR Controller, on both BR/EDR Controllers that form the connection, will send a Connection Complete event to each Host. The Connection Complete event contains the Connection Handle if this command is successful.

Note: no Command Complete event will be sent by the Controller to indicate that this command has been completed. Instead, the Connection Complete event will indicate that this command has been completed.

7.1.6 Disconnect Command

Command	OCF	Command Parameters	Return Parameters
HCI_Disconnect	0x0006	Connection_Handle, Reason	

Description:

The Disconnection command is used to terminate an existing connection. The Connection_Handle command parameter indicates which connection is to be disconnected. The Reason command parameter indicates the reason for ending the connection. The remote BR/EDR Controller will receive the Reason command parameter in the Disconnection Complete event. All synchronous connections on a physical link should be disconnected before the ACL connection on the same physical connection is disconnected.

Command Parameters:

Connection_Handle: *Size: 2 Octets (12 Bits meaningful)*

Value	Parameter Description
0xXXXX	Connection Handle for the connection being disconnected. Range: 0x0000-0x0EFF (0x0F00 - 0x0FFF Reserved for future use)

Reason: *Size: 1 Octet*

Value	Parameter Description
0x05, 0x13-0x15, 0x1A, 0x29	Authentication Failure error code (0x05), Other End Terminated Connection error codes (0x13-0x15), Unsupported Remote Feature error code (0x1A) and Pairing with Unit Key Not Supported error code (0x29), see "Error Codes" on page 335 [Part D] for a list of error codes and descriptions.

Return Parameters:

None.

Event(s) generated (unless masked away):

When the Controller receives the Disconnect command, it sends the Command Status event to the Host. The Disconnection Complete event will occur at each Host when the termination of the connection has completed, and indicates that this command has been completed.

Note: No Command Complete event will be sent by the Controller to indicate that this command has been completed. Instead, the Disconnection Complete event will indicate that this command has been completed.

7.1.7 Create Connection Cancel Command

Command	OCF	Command Parameters	Return Parameters
HCI_Create_Connection_Cancel	0x0008	BD_ADDR	Status, BD_ADDR

Description:

This command is used to request cancellation of the ongoing connection creation process, which was started by a Create_Connection command of the local BR/EDR Controller.

Command Parameters:

BD_ADDR: *Size: 6 Octets*

Value	Parameter Description
0xXXXXXXXXXXXX	BD_ADDR of the Create Connection command request that was issued before and is subject of this cancellation request

Return Parameters:

Status: *Size: 1 Octet*

Value	Parameter Description
0x00	Create Connection Cancel command succeeded
0x01-0xff	Create Connection Cancel command failed. See “Error Codes” on page 335 [Part D] for list of error codes

BD_ADDR: *Size: 6 Octet*

Value	Parameter Description
0xXXXXXXXXXXXX	BD_ADDR of the Create Connection command that was issued before and is the subject of this cancellation request.

Event(s) generated (unless masked away):

When the Create Connection Cancel command has completed, a Command Complete event shall be generated.

If the connection is already established by the baseband, but the BR/EDR Controller has not yet sent the Connection Complete event, then the local device shall detach the link and return a Command Complete event with the status “Success”.

If the connection is already established, and the Connection Complete event has been sent, then the Controller shall return a Command Complete event with the error code *ACL Connection already exists* (0x0B).

If the Create Connection Cancel command is sent to the Controller without a preceding Create Connection command to the same device, the BR/EDR ControllerController shall return a Command Complete event with the error code *Unknown Connection Identifier* (0x02).

The Connection Complete event for the corresponding Create Connection Command shall always be sent. The Connection Complete event shall be sent after the Command Complete event for the Create Connection Cancel command. If the cancellation was successful, the Connection Complete event will be generated with the error code *Unknown Connection Identifier* (0x02).

7.1.8 Accept Connection Request Command

Command	OCF	Command Parameters	Return Parameters
HCI_Accept_Connection Request	0x0009	BD_ADDR, Role	

Description:

The Accept_Connection_Request command is used to accept a new incoming connection request. The Accept_Connection_Request command shall only be issued after a Connection Request event has occurred. The Connection Request event will return the BD_ADDR of the device which is requesting the connection. This command will cause the Link Manager to create a connection to the BR/EDR Controller, with the BD_ADDR specified by the command parameters. The Link Manager will determine how the new connection will be established. This will be determined by the current state of the device, its piconet, and the state of the device to be connected. The Role command parameter allows the Host to specify if the Link Manager shall request a role switch and become the Master for this connection. This is a preference and not a requirement. If the Role Switch fails then the connection will still be accepted, and the Role Discovery Command will reflect the current role.

Note: The Link Manager may terminate the connection if it would be low on resources if the role switch fails. The decision to accept a connection must be completed before the connection accept timeout expires on the local Bluetooth Module.

Note: When accepting synchronous connection request, the Role parameter is not used and will be ignored by the BR/EDR Controller.

Command Parameters:

BD_ADDR: *Size: 6 Octets*

Value	Parameter Description
0xXXXXXXXXXXXX	BD_ADDR of the Device to be connected

Role: *Size: 1 Octet*

Value	Parameter Description
0x00	Become the Master for this connection. The LM will perform the role switch.
0x01	Remain the Slave for this connection. The LM will **NOT** perform the role switch.

Return Parameters:

None.

Event(s) generated (unless masked away):

The Accept_Connection_Request command will cause the Command Status event to be sent from the BR/EDR Controller when the BR/EDR Controller begins setting up the connection. In addition, when the Link Manager determines the connection is established, the local BR/EDR Controller will send a Connection Complete event to its Host, and the remote Controller will send a Connection Complete event or a Synchronous Connection Complete event to the Host. The Connection Complete event contains the Connection Handle if this command is successful.

Note: No Command Complete event will be sent by the BR/EDR Controller to indicate that this command has been completed. Instead, the Connection Complete event will indicate that this command has been completed.

7.1.9 Reject Connection Request Command

Command	OCF	Command Parameters	Return Parameters
HCI_Reject_Connection_Request	0x000A	BD_ADDR, Reason	

Description:

The Reject_Connection_Request command is used to decline a new incoming connection request. The Reject_Connection_Request command shall only be called after a Connection Request event has occurred. The Connection Request event will return the BD_ADDR of the device that is requesting the connection. The Reason command parameter will be returned to the connecting device in the Status parameter of the Connection Complete event returned to the Host of the connection device, to indicate why the connection was declined.

Command Parameters:

BD_ADDR: *Size: 6 Octets*

Value	Parameter Description
0xXXXXXXXXXXXX	BD_ADDR of the Device to reject the connection from.

Reason: *Size: 1 Octet*

Value	Parameter Description
0x0D-0x0F	Host Reject Error Code. See “Error Codes” on page 335 [Part D] for list of Error Codes and descriptions.

Return Parameters:

None.

Event(s) generated (unless masked away):

When the Controller receives the Reject_Connection_Request command, the Controller sends the Command Status event to the Host. Then, the local BR/EDR Controller will send a Connection Complete event to its host, and the remote device will send a Connection Complete event or a Synchronous Connection Complete event to the host. The Status parameter of the Connection Complete event, which is sent to the Host of the device attempting to make the connection, will contain the Reason command parameter from this command.

Note: no Command Complete event will be sent by the BR/EDR Controller to indicate that this command has been completed. Instead, the Connection Complete event will indicate that this command has been completed.

7.1.10 Link Key Request Reply Command

Command	OCF	Command Parameters	Return Parameters
HCI_Link_Key_Request_Reply	0x000B	BD_ADDR, Link_Key	Status, BD_ADDR

Description:

The Link_Key_Request_Reply command is used to reply to a Link Key Request event from the Controller, and specifies the Link Key stored on the Host to be used as the link key for the connection with the other BR/EDR Controller specified by BD_ADDR. The Link Key Request event will be generated when the BR/EDR Controller needs a Link Key for a connection.

When the BR/EDR Controller generates a Link Key Request event in order for the local Link Manager to respond to the request from the remote Link Manager (as a result of a Create_Connection or Authentication_Requested command from the remote Host), the local Host must respond with either a Link_Key_Request_Reply or Link_Key_Request_Negative_Reply command before the remote Link Manager detects LMP response timeout. (See “Link Manager Protocol Specification” on page 205 [Part C].)

Command Parameters:

BD_ADDR: *Size: 6 Octets*

Value	Parameter Description
0xXXXXXXXXXXXX	BD_ADDR of the Device of which the Link Key is for.

Link_Key: *Size: 16 Octets*

Value	Parameter Description
0xXXXXXXXXXX XXXXXXXXXX XXXXXXXXXX	Link Key for the associated BD_ADDR.

Return Parameters:

Status: *Size: 1 Octet*

Value	Parameter Description
0x00	Link_Key_Request_Reply command succeeded.
0x01-0xFF	Link_Key_Request_Reply command failed. See “Error Codes” on page 335 [Part D] for error codes and descriptions.

BD_ADDR: *Size: 6 Octets*

Value	Parameter Description
0xXXXXXXXXXXXX	BD_ADDR of the Device of which the Link Key request reply has completed.

Event(s) generated (unless masked away):

The Link_Key_Request_Reply command will cause a Command Complete event to be generated.

7.1.11 Link Key Request Negative Reply Command

Command	OCF	Command Parameters	Return Parameters
HCI_Link_Key_Request_Negative_Reply	0x000C	BD_ADDR	Status, BD_ADDR

Description:

The Link_Key_Request_Negative_Reply command is used to reply to a Link Key Request event from the BR/EDR Controller if the Host does not have a stored Link Key for the connection with the other BR/EDR Controller specified by BD_ADDR. The Link Key Request event will be generated when the BR/EDR Controller needs a Link Key for a connection.

When the Controller generates a Link Key Request event in order for the local Link Manager to respond to the request from the remote Link Manager (as a result of a Create_Connection or Authentication_Requested command from the remote Host), the local Host must respond with either a Link_Key_Request_Reply or Link_Key_Request_Negative_Reply command before the remote Link Manager detects LMP response timeout. (See “Link Manager Protocol Specification” on page 205 [Part C].)

Command Parameters:

BD_ADDR: *Size: 6 Octets*

Value	Parameter Description
0xXXXXXXXXXXXX	BD_ADDR of the Device which the Link Key is for.

Return Parameters:

Status: *Size: 1 Octet*

Value	Parameter Description
0x00	Link_Key_Request_Negative_Reply command succeeded.

0x01-0xFF	Link_Key_Request_Negative_Reply command failed. See "Error Codes" on page 335 [Part D] for a list of error codes and descriptions.

BD_ADDR: *Size: 6 Octets*

Value	Parameter Description
0xXXXXXXXXXXXX	BD_ADDR of the Device which the Link Key request negative reply has completed.

Event(s) generated (unless masked away):

The Link_Key_Request_Negative_Reply command will cause a Command Complete event to be generated.

7.1.12 PIN Code Request Reply Command

Command	OCF	Command Parameters	Return Parameters
HCI_PIN_Code_Request_Reply	0x000D	BD_ADDR, PIN_Code_Length, PIN_Code	Status, BD_ADDR

Description:

The PIN_Code_Request_Reply command is used to reply to a PIN Code request event from the BR/EDR Controller, and specifies the PIN code to use for a connection. The PIN Code Request event will be generated when a connection with remote initiating device has requested pairing.

When the BR/EDR Controller generates a PIN Code Request event in order for the local Link Manager to respond to the request from the remote Link Manager (as a result of a Create_Connection or Authentication_Requested command from the remote Host), the local Host must respond with either a PIN_Code_Request_Reply or PIN_Code_Request_Negative_Reply command before the remote Link Manager detects LMP response timeout. (See "Link Manager Protocol Specification" on page 205 [Part C].)

Command Parameters:

BD_ADDR: *Size: 6 Octets*

Value	Parameter Description
0xXXXXXXXXXXXX	BD_ADDR of the Device which the PIN code is for.

PIN_Code_Length: *Size: 1 Octet*

Value	Parameter Description
0xXX	The PIN code length specifics the length, in octets, of the PIN code to be used. Range: 0x01-0x10

PIN_Code: *Size: 16 Octets*

Value	Parameter Description
0xXXXXXXXXXX XXXXXXXXXX XXXXXXXXXX	PIN code for the device that is to be connected. The Host should ensure that strong PIN Codes are used. PIN Codes can be up to a maximum of 128 bits. Note: the PIN_Code Parameter is a string parameter. Endianess does therefore not apply to the PIN_Code Parameter. The first octet of the PIN code should be transmitted first.

Return Parameters:

Status: *Size: 1 Octet*

Value	Parameter Description
0x00	PIN_Code_Request_Reply command succeeded.
0x01-0xFF	PIN_Code_Request_Reply command failed. See “Error Codes” on page 335 [Part D] for a list of error codes and descriptions.

BD_ADDR: *Size: 6 Octets*

Value	Parameter Description
0xXXXXXXXX XXXX	BD_ADDR of the Device which the PIN Code request reply has completed.

Event(s) generated (unless masked away):

The PIN_Code_Request_Reply command will cause a Command Complete event to be generated.

7.1.13 PIN Code Request Negative Reply Command

Command	OCF	Command Parameters	Return Parameters
HCI_PIN_Code_ Request_Negative Reply	0x000E	BD_ADDR	Status, BD_ADDR

Description:

The PIN_Code_Request_Negative_Reply command is used to reply to a PIN Code request event from the BR/EDR Controller when the Host cannot specify a PIN code to use for a connection. This command will cause the pair request with remote device to fail.

When the BR/EDR Controller generates a PIN Code Request event in order for the local Link Manager to respond to the request from the remote Link Manager (as a result of a Create_Connection or Authentication_Requested command from the remote Host), the local Host must respond with either a PIN_Code_Request_Reply or PIN_Code_Request_Negative_Reply command before the remote Link Manager detects LMP response timeout. (See “Link Manager Protocol Specification” on page 205 [Part C].)

Command Parameters:

BD_ADDR: *Size: 6 Octets*

Value	Parameter Description
0xXXXXXXXXXXXX	BD_ADDR of the Device which this command is responding to.

Return Parameters:

Status: *Size: 1 Octet*

Value	Parameter Description
0x00	PIN_Code_Request_Negative_Reply command succeeded.
0x01-0xFF	PIN_Code_Request_Negative_Reply command failed. See “Error Codes” on page 335 [Part D] for a list of error codes and descriptions.

BD_ADDR: *Size: 6 Octets*

Value	Parameter Description
0xXXXXXXXXXXXX	BD_ADDR of the Device which the PIN Code request negative reply has completed.

Event(s) generated (unless masked away):

The PIN_Code_Request_Negative_Reply command will cause a Command Complete event to be generated.

7.1.14 Change Connection Packet Type Command

Command	OCF	Command Parameters	Return Parameters
HCI_Change_Connection_ Packet_Type	0x000F	Connection_Handle, Packet_Type	

Description:

The Change_Connection_Packet_Type command is used to change which packet types can be used for a connection that is currently established. This allows current connections to be dynamically modified to support different types of user data. The Packet_Type command parameter specifies which packet types the Link Manager can use for the connection. When sending HCI ACL Data Packets the Link Manager shall only use the packet type(s) specified by the Packet_Type command parameter or the always-allowed DM1 packet type. The interpretation of the value for the Packet_Type command parameter will depend on the Link_Type command parameter returned in the Connection Complete event at the connection setup. Multiple packet types may be specified for the Packet_Type command parameter by bitwise OR operation of the different packet types. For a definition of the different packet types see the "Baseband Specification" on page 57 [Part B].

Note: The Host should enable as many packet types as possible for the Link Manager to perform efficiently. However, the Host must not enable packet types that the local device does not support.

Note: to change an eSCO connection, use the Setup Synchronous Connection command.

Command Parameters:

Connection_Handle: *Size: 2 Octets (12 Bits meaningful)*

Value	Parameter Description
0xXXXX	Connection Handle to be used to for transmitting and receiving voice or data. Returned from creating a connection. Range: 0x0000-0x0EFF (0x0F00 - 0x0FFF Reserved for future use)

Packet_Type: *Size: 2 Octets*

For ACL Link_Type

Value	Parameter Description
0x0001	Reserved for future use.
0x0002	2-DH1 may not be used.
0x0004	3-DH1 may not be used.

Value	Parameter Description
0x0008[1]	DM1 may be used.
0x0010	DH1 may be used.
0x0020	Reserved for future use.
0x0040	Reserved for future use.
0x0080	Reserved for future use.
0x0100	2-DH3 may not be used.
0x0200	3-DH3 may not be used.
0x0400	DM3 may be used.
0x0800	DH3 may be used.
0x1000	2-DH5 may not be used.
0x2000	3-DH5 may not be used.
0x4000	DM5 may be used.
0x8000	DH5 may be used.

1. This bit will be interpreted as set to 1 by Bluetooth V1.2 or later controllers.

For SCO Link Type

Value	Parameter Description
0x0001	Reserved for future use.
0x0002	Reserved for future use.
0x0004	Reserved for future use.
0x0008	Reserved for future use.
0x0010	Reserved for future use.
0x0020	HV1
0x0040	HV2
0x0080	HV3
0x0100	Reserved for future use.
0x0200	Reserved for future use.
0x0400	Reserved for future use.
0x0800	Reserved for future use.
0x1000	Reserved for future use.
0x2000	Reserved for future use.
0x4000	Reserved for future use.
0x8000	Reserved for future use.

Return Parameters:

None.

Event(s) generated (unless masked away):

When the BR/EDR Controller receives the Change Connection Packet Type command, BR/EDR the Controller sends the Command Status event to the Host. In addition, when the Link Manager determines the packet type has been changed for the connection, the Controller on the local device will send a Connection Packet Type Changed event to the Host. This will be done at the local side only.

Note: no Command Complete event will be sent by the BR/EDR Controller to indicate that this command has been completed. Instead, the Connection Packet Type Changed event will indicate that this command has been completed.

7.1.15 Authentication Requested Command

Command	OCF	Command Parameters	Return Parameters
HCI_Authentication_ Requested	0x0011	Connection_Handle	

Description:

The Authentication_Requested command is used to try to authenticate the remote device associated with the specified Connection Handle. On an authentication failure, the BR/EDR Controller or Link Manager shall not automatically detach the link. The Host is responsible for issuing a Disconnect command to terminate the link if the action is appropriate.

Note: the Connection_Handle command parameter is used to identify the other BR/EDR Controller, which forms the connection. The Connection Handle should be a Connection Handle for an ACL connection.

Command Parameters:

Connection_Handle: *Size 2 Octets (12 Bits meaningful)*

Value	Parameter Description
0xXXXX	Connection Handle to be used to set up authentication for all Connection Handles with the same BR/EDR Controller end-point as the specified Connection Handle. Range: 0x0000-0x0EFF (0x0F00 - 0x0FFF Reserved for future use)

Return Parameters:

None.

Event(s) generated (unless masked away):

When the Controller receives the Authentication_Requested command, it sends the Command Status event to the Host. The Link Key Request event shall be generated when Simple Pairing Mode is enabled. If authentication fails and Simple Pairing Mode is not enabled, the PIN Code Request event may be generated. The Authentication Complete event will occur when the authentication has been completed for the connection and is indication that this command has been completed.

Note: No Command Complete event will be sent by the BR/EDR Controller to indicate that this command has been completed. Instead, the Authentication Complete event will indicate that this command has been completed.

On receipt of an Authentication Requested Command, a local BR/EDR Controller that is not in Simple Pairing Mode may use an existing stored link key and respond immediately to the Host with an Authentication Complete event.

This behavior is not recommended for controllers as it offers the Host no method for enhancing the security of an existing link (e.g., in the case where a profile mandating a minimum passkey length is started over a link that is already authenticated with shorter passkey than the new service requires).

7.1.16 Set Connection Encryption Command

Command	OCF	Command Parameters	Return Parameters
HCI_Set_Connection_ Encryption	0x0013	Connection_Handle, Encryption_Enable	

Description:

The Set_Connection_Encryption command is used to enable and disable the link level encryption. Note**:** the Connection_Handle command parameter is used to identify the other BR/EDR Controller which forms the connection. The Connection Handle should be a Connection Handle for an ACL connection. While the encryption is being changed, all ACL traffic must be turned off for all Connection Handles associated with the remote device.

Command Parameters:

Connection_Handle: *Size 2 Octets (12 Bits meaningful)*

Value	Parameter Description
0xXXXX	Connection Handle to be used to enable/disable the link layer encryption for all Connection Handles with the same BR/EDR Controller end-point as the specified Connection Handle. Range: 0x0000-0x0EFF (0x0F00 - 0x0FFF Reserved for future use)

Encryption_Enable: *Size: 1 Octet*

Value	Parameter Description
0x00	Turn Link Level Encryption OFF.
0x01	Turn Link Level Encryption ON.

Return Parameters:

None.

Event(s) generated (unless masked away):

When the BR/EDR Controller receives the Set_Connection_Encryption command, the BR/EDR Controller sends the Command Status event to the Host. When the Link Manager has completed enabling/disabling encryption for the connection, the local BR/EDR Controller will send an Encryption Change event

to the Host, and the BR/EDR Controller on the remote device will also generate an Encryption Change event.

Note: no Command Complete event will be sent by the Controller to indicate that this command has been completed. Instead, the Encryption Change event will indicate that this command has been completed.

7.1.17 Change Connection Link Key Command

Command	OCF	Command Parameters	Return Parameters
HCI_Change_Connection_ Link_Key	0x0015	Connection_Handle	

Description:

The Change_Connection_Link_Key command is used to force both devices of a connection associated with the Connection Handle to generate a new link key. The link key is used for authentication and encryption of connections.

Note: the Connection_Handle command parameter is used to identify the other BR/EDR Controller forming the connection. The Connection Handle should be a Connection Handle for an ACL connection.

Command Parameters:

Connection_Handle: *Size 2 Octets (12 Bits meaningful)*

Value	Parameter Description
0xXXXX	Connection Handle used to identify a connection. Range: 0x0000-0x0EFF (0x0F00 - 0x0FFF Reserved for future use)

Return Parameters:

None.

Event(s) generated (unless masked away):

When the Controller receives the Change_Connection_Link_Key command, the BR/EDR Controller sends the Command Status event to the Host. When the Link Manager has changed the Link Key for the connection, the local BR/EDR Controller will send a Link Key Notification event and a Change Connection Link Key Complete event to the Host, and the remote BR/EDR Controller will also generate a Link Key Notification event. The Link Key Notification event indicates that a new connection link key is valid for the connection.

Note: no Command Complete event will be sent by the BR/EDR Controller to indicate that this command has been completed. Instead, the Change Connection Link Key Complete event will indicate that this command has been completed.

7.1.18 Master Link Key Command

Command	OCF	Command Parameters	Return Parameters
HCI_Master_Link_Key	0x0017	Key_Flag	

Description:

The Master Link Key command is used to force the device that is master of the piconet to use the temporary link key of the master device, or the semi-permanent link keys. The temporary link key is used for encryption of broadcast messages within a piconet, and the semi-permanent link keys are used for private encrypted point-to-point communication. The Key_Flag command parameter is used to indicate which Link Key (temporary link key of the Master, or the semi-permanent link keys) shall be used.

Command Parameters:

Key_Flag: *Size: 1 Octet*

Value	Parameter Description
0x00	Use semi-permanent Link Keys.
0x01	Use Temporary Link Key.

Return Parameters:

None.

Event(s) generated (unless masked away):

When the BR/EDR Controller receives the Master_Link_Key command, the BR/EDR Controller sends the Command Status event to the Host. When the Link Manager has changed link key, the BR/EDR Controller on both the local and the remote device will send a Master Link Key Complete event to the Host. The Connection Handle on the master side will be a Connection Handle for one of the existing connections to a slave. On the slave side, the Connection Handle will be a Connection Handle to the initiating master.

The Master Link Key Complete event contains the status of this command.

Note: no Command Complete event will be sent by the BR/EDR Controller to indicate that this command has been completed. Instead, the Master Link Key Complete event will indicate that this command has been completed.

7.1.19 Remote Name Request Command

Command	OCF	Command Parameters	Return Parameters
HCI_Remote_Name_Request	0x0019	BD_ADDR, Page_Scan_Repetition_Mode, Reserved, Clock_Offset	

Description:

The Remote_Name_Request command is used to obtain the user-friendly name of another BR/EDR Controller. The user-friendly name is used to enable the user to distinguish one BR/EDR Controller from another. The BD_ADDR command parameter is used to identify the device for which the user-friendly name is to be obtained. The Page_Scan_Repetition_Mode parameter specifies the page scan repetition mode supported by the remote device with the BD_ADDR. This is the information that was acquired during the inquiry process. The Clock_Offset parameter is the difference between its own clock and the clock of the remote device with BD_ADDR. Only bits 2 through 16 of the difference are used and they are mapped to this parameter as bits 0 through 14 respectively. A Clock_Offset_Valid_Flag, located in bit 15 of the Clock_Offset command parameter, is used to indicate if the Clock Offset is valid or not.

When the Remote Supported Host Features Notification event is unmasked and when the Remote_Name_Request command initiates a connection, the Link Manager shall read the remote LMP features mask pages 0 and 1.

Note: If no connection exists between the local device and the device corresponding to the BD_ADDR, a temporary link layer connection will be established to obtain the LMP features and name of the remote device.

Command Parameters:

BD_ADDR: *Size: 6 Octets*

Value	Parameter Description
0xXXXXXXXXXXXX	BD_ADDR for the device whose name is requested.

Page_Scan_Repetition_Mode: *Size: 1 Octet*

Value	Parameter Description
0x00	R0
0x01	R1
0x02	R2
0x03 – 0xFF	Reserved.

Reserved: *Size: 1 Octet*

Value	Parameter Description
0x00	Reserved, must be set to 0x00. See “Page Scan Mode” on page 734.

Clock_Offset: *Size: 2 Octets*

Bit format	Parameter Description
Bit 14.0	Bit 16.2 of CLKslave-CLKmaster.
Bit 15	Clock_Offset_Valid_Flag Invalid Clock Offset = 0 Valid Clock Offset = 1

Return Parameters:

None.

Event(s) generated (unless masked away):

When the BR/EDR Controller receives the Remote_Name_Request command, the BR/EDR Controller sends the Command Status event to the Host. When the Link Manager has completed the LMP messages to obtain the remote host supported features, if present, the BR/EDR Controller on the local BR/EDR Controller will send a Remote Host Supported Features Notification event. When the Link Manager has completed the LMP messages to obtain the remote name, the BR/EDR Controller on the local BR/EDR Controller will send a Remote Name Request Complete event to the Host. If the remote host supported features page is present, the Remote Host Supported Features Notification event will be sent before the Remote Name Request Complete event. If not, only the Remote Name Request Complete event will be sent.

Note: no Command Complete event will be sent by the BR/EDR Controller to indicate that this command has been completed. Instead, only the Remote Name Request Complete event will indicate that this command has been completed.

7.1.20 Remote Name Request Cancel Command

Command	OCF	Command Parameters	Return Parameters
HCI_Remote_Name_Request_Cancel	0x001A	BD_ADDR	Status, BD_ADDR

Description:

This command is used to request cancellation of the ongoing remote name request process, which was started by the Remote Name Request command.

Command Parameters:

BD_ADDR: *Size: 6 Octets*

Value	Parameter Description
0xXXXXXXXXXXXX	BD_ADDR of the Remote Name Request command that was issued before and that is subject of this cancellation request

Return Parameters:

Status: *Size: 1 Octet*

Value	Parameter Description
0x00	Remote Name Request Cancel command succeeded
0x01-0xff	Remote Name Request Cancel command failed. See “Error Codes” on page 335 [Part D] for list of error codes

BD_ADDR: *Size: 6 Octets*

Value	Parameter Description
0xXXXXXXXXXXXX	BD_ADDR of the Remote Name Request Cancel command that was issued before and that was subject of this cancellation request

Event(s) generated (unless masked away):

When the Remote Name Request Cancel command has completed, a Command Complete event shall be generated.

If the Remote Name Request Cancel command is sent to the BR/EDR Controller without a preceding Remote Name Request command to the same device, the Controller will return a Command Complete event with the error code *Invalid HCI Command Parameters* (0x12).

The Remote Name Request Complete event for the corresponding Remote Name Request Command shall always be sent. The Remote Name Request Complete event shall be sent after the Command Complete event for the

Remote Name Request Cancel command. If the cancellation was successful, the Remote Name Request Complete event will be generated with the error code *Unknown Connection Identifier (0x02)*.

7.1.21 Read Remote Supported Features Command

Command	OCF	Command Parameters	Return Parameters
HCI_Read_Remote_Supported_Features	0x001B	Connection_Handle	

Description:

This command requests a list of the supported features for the remote device identified by the Connection_Handle parameter. The Connection_Handle must be a Connection_Handle for an ACL connection. The Read Remote Supported Features Complete event will return a list of the LMP features. For details see “Link Manager Protocol Specification” on page 205 [Part C].

Command Parameters:

Connection_Handle: *Size: 2 Octets (12 Bits meaningful)*

Value	Parameter Description
0xXXXX	Specifies which Connection Handle’s LMP-supported features list to get. Range: 0x0000-0x0EFF (0x0F00 - 0x0FFF Reserved for future use)

Return Parameters:

None.

Event(s) generated (unless masked away):

When the BR/EDR Controller receives the Read_Remote_Supported_Features command, the BR/EDR Controller sends the Command Status event to the Host. When the Link Manager has completed the LMP messages to determine the remote features, the BR/EDR Controller on the local BR/EDR Controller will send a Read Remote Supported Features Complete event to the Host. The Read Remote Supported Features Complete event contains the status of this command, and parameters describing the supported features of the remote device. Note: no Command Complete event will be sent by the BR/EDR Controller to indicate that this command has been completed. Instead, the Read Remote Supported Features Complete event will indicate that this command has been completed.

7.1.22 Read Remote Extended Features Command

Command	OCF	Command Parameters	Return Parameters
HCI_Read_Remote_Extended_Features	0x001C	Connection_Handle, Page Number	

Description:

The HCI_Read_Remote_Extended_Features command returns the requested page of the extended LMP features for the remote device identified by the specified Connection Handle. The Connection Handle must be the Connection Handle for an ACL connection. This command is only available if the extended features feature is implemented by the remote device. The Read Remote Extended Features Complete event will return the requested information.
For details see “Link Manager Protocol Specification” on page 205 [Part C].

Command Parameters:

Connection_Handle: *Size: 2 Octets (12 Bits meaningful)*

Value	Parameter Description
0xXXXX	The Connection Handle identifying the remote device for which extended feature information is required. Range: 0x0000-0x0EFF (0x0F00-0x0FFF Reserved for future use)

Page Number: *Size: 1 Octet*

Value	Parameter Description
0x00	Requests the normal LMP features as returned by HCI_Read_Remote_Supported_Features
0x01-0xFF	Return the corresponding page of features

Return Parameters:

None.

Event(s) generated (unless masked away):

When the BR/EDR Controller receives the HCI_Read_Remote_Extended_Features command the BR/EDR Controller sends the Command Status event to the Host. When the Link Manager has completed the LMP sequence to determine the remote extended features the controller on the local device will generate a Read Remote Extended Features Complete event to the host. The Read Remote Extended Features Complete event contains the page number and the remote features returned by the remote device.

Note: No Command Complete event will ever be sent by the BR/EDR Controller to indicate that this command has been completed. Instead the Read Remote Extended Features Complete event will indicate that this command has been completed.

7.1.23 Read Remote Version Information Command

Command	OCF	Command Parameters	Return Parameters
HCI_Read_Remote_Version_ Information	0x001D	Connection_Handle	

Description:

This command will obtain the values for the version information for the remote BR/EDR Controller identified by the Connection_Handle parameter. The Connection_Handle must be a Connection_Handle for an ACL connection.

Command Parameters:

Connection_Handle: *Size: 2 Octets (12 Bits meaningful)*

Value	Parameter Description
0xXXXX	Specifies which Connection Handle's version information to get. Range: 0x0000-0x0EFF (0x0F00 - 0x0FFF Reserved for future use)

Return Parameters:

None.

Event(s) generated (unless masked away):

When the BR/EDR Controller receives the Read_Remote_Version_Information command, the BR/EDR Controller sends the Command Status event to the Host. When the Link Manager has completed the LMP messages to determine the remote version information, the BR/EDR Controller on the local BR/EDR Controller will send a Read Remote Version Information Complete event to the Host. The Read Remote Version Information Complete event contains the status of this command, and parameters describing the version and subversion of the LMP used by the remote device.

Note: no Command Complete event will be sent by the BR/EDR Controller to indicate that this command has been completed. Instead, the Read Remote Version Information Complete event will indicate that this command has been completed.

7.1.24 Read Clock Offset Command

Command	OCF	Command Parameters	Return Parameters
HCI_Read_Clock_Offset	0x001F	Connection_Handle	

Description:

Both the System Clock and the clock offset to a remote device are used to determine what hopping frequency is used by a remote device for page scan. This command allows the Host to read clock offset to remote devices. The clock offset can be used to speed up the paging procedure when the local device tries to establish a connection to a remote device, for example, when the local Host has issued Create_Connection or Remote_Name_Request. The Connection_Handle must be a Connection_Handle for an ACL connection.

Command Parameters:

Connection_Handle: *Size: 2 Octets (12 bits meaningful)*

Value	Parameter Description
0xXXXX	Specifies which Connection Handle's Clock Offset parameter is returned. Range: 0x0000-0x0EFF (0x0F00 - 0x0FFF Reserved for future use)

Return Parameters:

None.

Event(s) generated (unless masked away):

When the BR/EDR Controller receives the Read_Clock_Offset command, the BR/EDR Controller sends the Command Status event to the Host. If this command was requested at the master and the Link Manager has completed the LMP messages to obtain the Clock Offset information, the BR/EDR Controller on the local BR/EDR Controller will send a Read Clock Offset Complete event to the Host.

Note: No Command Complete event will be sent by the BR/EDR Controller to indicate that this command has been completed. Instead, only the Read Clock Offset Complete event will indicate that this command has been completed. If the command is requested at the slave, the LM will immediately send a Command Status event and a Read Clock Offset Complete event to the Host, without an exchange of LMP PDU.

7.1.25 Read LMP Handle Command

Command	OCF	Command Parameters	Return Parameters
HCI_Read_LMP_Handle	0x0020	Connection_Handle	Status, Connection_Handle, LMP_Handle, Reserved

Description:

This command will read the current LMP Handle associated with the Connection_Handle. The Connection_Handle must be a SCO or eSCO Handle. If the Connection_Handle is a SCO Connection Handle, then this command shall read the LMP SCO Handle for this connection. If the Connection_Handle is an eSCO Connection Handle, then this command shall read the LMP eSCO Handle for this connection.

Command Parameters:

Connection_Handle: *Size 2 Octets (12 bits meaningful)*

Value	Parameter Description
0xXXXX	Connection Handle to be used to identify which connection to be used for reading the LMP Handle. This must be a synchronous handle. Range: 0x0000-0x0EFF (0x0F00 – 0x0FFF Reserved for future use)

Return Parameters:

Status: *Size: 1 Octet*

Value	Parameter Description
0x00	Read_LMP_Handle command succeeded.
0x01 – 0xFF	Read_LMP_Handle command failed. See “Error Codes” on page 335 [Part D] for a list of error codes and descriptions.

Connection_Handle: *Size: 2 Octets (12 bits meaningful)*

Value	Parameter Description
0xXXXX	The Connection Handle for the Connection for which the LMP_Handle has been read. Range: 0x0000-0x0EFF (0x0F00 – 0x0FFF Reserved for future use)

LMP_Handle: *Size: 1 Octet*

Value	Parameter Description
0xXX	The LMP Handle is the LMP Handle that is associated with this Connection Handle. For a synchronous handle, this would be the LMP Synchronous Handle used when negotiating the synchronous connection in the link manager.

Reserved: *Size: 4 Octets*

Value	Parameter Description
0xXXXXXXXX	This parameter is reserved, must to set to zero.

Events(s) generated (unless masked away):

When the Read_LMP_Handle command has completed, a Command Complete event will be generated.

7.1.26 Setup Synchronous Connection Command

Command	OCF	Command Parameters	Return Parameters
HCI_Setup_Synchronous_Connection	0x0028	Connection_Handle Transmit_Bandwidth Receive_Bandwidth Max_Latency Voice_Setting Retransmission_Effort Packet Type	

Description:

The HCI Setup Synchronous Connection command adds a new or modifies an existing synchronous logical transport (SCO or eSCO) on a physical link depending on the Connection_Handle parameter specified. If the Connection_Handle refers to an ACL link a new synchronous logical transport will be added. If the Connection_Handle refers to an already existing synchronous logical transport (eSCO only) this link will be modified. The parameters are specified per connection. This synchronous connection can be used to transfer synchronous voice at 64kbps or transparent synchronous data.

When used to setup a new synchronous logical transport, the Connection_Handle parameter shall specify an ACL connection with which the new synchronous connection will be associated. The other parameters relate to the negotiation of the link, and may be reconfigured during the lifetime of the link. The transmit and receive bandwidth specify how much bandwidth shall be available for transmitting and for receiving data. While in many cases the receive and transmit bandwidth parameters may be equal, they may be different. The latency specifies an upper limit to the time in milliseconds between the eSCO (or SCO) instants, plus the size

of the retransmission window, plus the length of the reserved synchronous slots for this logical transport. The content format specifies the settings for voice or transparent data on this connection. The retransmission effort specifies the extra resources that are allocated to this connection if a packet may need to be retransmitted. The Retransmission_Effort parameter shall be set to indicate the required behavior, or to don't care.

When used to modify an existing synchronous logical transport, the Transmit_Bandwidth, Receive_Bandwidth and Voice_Settings shall be set to the same values as were used during the initial setup. The Packet_Type, Retransmission_Effort and Max_Latency parameters may be modified.

The Packet_Type field is a bitmap specifying which packet types the LM shall accept in the negotiation of the link parameters. Multiple packet types are specified by bitwise OR of the packet type codes in the table. At least one packet type must be specified for each negotiation. It is recommended to enable as many packet types as possible. Note that it is allowed to enable packet types that are not supported by the local device.

A Connection Handle for the new synchronous connection will be returned in the synchronous connection complete event.

Note: The link manager may choose any combination of packet types, timing, and retransmission window sizes that satisfy the parameters given. This may be achieved by using more frequent transmissions of smaller packets. The link manager may choose to set up either a SCO or an eSCO connection, if the parameters allow, using the corresponding LMP sequences.

Note: To modify a SCO connection, use the Change Connection Packet Type command.

Note: If the lower layers cannot achieve the exact transmit and receive bandwidth requested subject to the other parameters, then the link shall be rejected.

A synchronous connection may only be created when an ACL connection already exists and when it is not in Park state.

Command Parameters:

Connection_Handle: *2 octets (12 bits meaningful)*

Value	Parameter Description
0xXXXX	Connection Handle for the ACL connection being used to create a synchronous Connection or for the existing Connection that shall be modified. Range: 0x0000-0x0EFF (0x0F00 - 0x0FFF Reserved for future use)

Transmit_Bandwidth: *4 octets*

Value	Parameter Description
0xXXXXXXXX	Transmit bandwidth in octets per second.

Receive_Bandwidth: *4 octets*

Value	Parameter Description
0xXXXXXXXX	Receive bandwidth in octets per second.

Max_Latency: *2 octets*

Value	Parameter Description
0x0000-0x0003	Reserved
0x0004-0xFFFE	This is a value in milliseconds representing the upper limit of the sum of the synchronous interval, and the size of the eSCO window, where the eSCO window is the reserved slots plus the retransmission window. (See Figure 8.7 in the Baseband specification)
0xFFFF	Don't care.

Voice_Setting: *2 octets (10 bits meaningful)*

Value	Parameter Description
See Section 6.12 on page 423.	

Retransmission_Effort: *1 octet*

Value	Parameter Description
0x00	No retransmissions
0x01	At least one retransmission, optimize for power consumption.
0x02	At least one retransmission, optimize for link quality
0xFF	Don’t care
0x03 – 0xFE	Reserved

Packet_Type: *2 octets*

Value	Parameter Description
0x0001	HV1 may be used.
0x0002	HV2 may be used.
0x0004	HV3 may be used.
0x0008	EV3 may be used.
0x0010	EV4 may be used.

Value	Parameter Description
0x0020	EV5 may be used.
0x0040	2-EV3 may not be used.
0x0080	3-EV3 may not be used.
0x0100	2-EV5 may not be used.
0x0200	3-EV5 may not be used.
0x0400	Reserved for future use
0x0800	Reserved for future use
0x1000	Reserved for future use
0x2000	Reserved for future use
0x4000	Reserved for future use
0x8000	Reserved for future use

Return Parameters:

None

Event(s) generated (unless masked away)

When the BR/EDR Controller receives the Setup_Synchronous_Connection command, it sends the Command Status event to the Host. In addition, when the LM determines the connection is established, the local BR/EDR Controller will send a Synchronous Connection Complete event to the local Host, and the remote Controller will send a Synchronous Connection Complete event or a Connection Complete event to the remote Host. The synchronous Connection Complete event contains the Connection Handle if this command is successful.

If this command is used to change the parameters of an existing eSCO link, the Synchronous Connection Changed Event is sent to both hosts. In this case no Connection Setup Complete Event or Connection Request Event will be sent to either host. This command cannot be used to change the parameters of an SCO link.

Note: no Command Complete event will be sent by the BR/EDR Controller to indicate that this command has been completed. Instead, the synchronous Connection Complete event will indicate that this command has been completed.

7.1.27 Accept Synchronous Connection Request Command

Command	OCF	Command Parameters	Return Parameters
HCI_Accept_ Synchronous_ Connection_Request	0x0029	BD_ADDR Transmit_Bandwidth Receive_Bandwidth Max_Latency Content_Format Retransmission_Effort Packet_Type	

Description:

The Accept_Synchronous_Connection_Request command is used to accept an incoming request for a synchronous connection and to inform the local Link Manager about the acceptable parameter values for the synchronous connection. The Command shall only be issued after a Connection_Request event with link type SCO or eSCO has occurred. Connection_Request event contains the BD_ADDR of the device requesting the connection. The decision to accept a connection must be taken before the connection accept timeout expires on the local device.

The parameter set of the Accept_Synchronous_Connection_Request command is the same as for the Setup_Synchronous_Connection command. The Transmit_Bandwidth and Receive_Bandwidth values are required values for the new link and shall be met. The Max_Latency is an upper bound to the acceptable latency for the Link, as defined in Section 7.1.26 on page 473 Setup_Synchronous_Connection and shall not be exceeded. Content_Format specifies the encoding in the same way as in the Setup_Synchronous_Connection command and shall be met. The Retransmission_Effort parameter shall be set to indicate the required behavior, or to don't care. The Packet_Type parameter is a bit mask specifying the synchronous packet types that are allowed on the link and shall be met. The reserved bits in the Packet_Type field shall be set to one. If all bits are set in the packet type field then all packets types shall be allowed.

If the Link Type of the incoming request is SCO, then only the Transmit_Bandwidth, Max_Latency, Content_Format, and Packet_Type fields are valid.

If the Connection_Request event is masked away, and the BR/EDR Controller is not set to auto-accept this connection attempt, the BR/EDR Controller will automatically reject it. If the controller is set to automatically accept the connection attempt, the LM should assume default parameters. In that case the Synchronous_Connection_Complete Event shall be generated, unless masked away.

Command Parameters:

BD_ADDR: *6 octets*

Value	Parameter Description
0xXXXXXXXXXXXX	BD_ADDR of the device requesting the connection

Transmit_Bandwidth: *4 octets*

Value	Parameter Description
0x00000000-0xFFFFFFFE	Maximum possible transmit bandwidth in octets per second.
0xFFFFFFFF	Don't care

Default: Don't care

Receive_Bandwidth: *4 octets*

Value	Parameter Description
0x00000000-0xFFFFFFFE	Maximum possible receive bandwidth in octets per second.
0xFFFFFFFF	Don't care

Default: Don't care

Max_Latency: *2 octets*

Value	Parameter Description
0x0000-0x0003	Reserved
0x0004-0xFFFE	This is a value in milliseconds representing the upper limit of the sum of the synchronous interval and the size of the eSCO window, where the eSCO window is the reserved slots plus the retransmission window.
0xFFFF	Don't care.

Default: Don't care

Content_Format: *2 octets (10 bits meaningful)*

Value	Parameter Description
00XXXXXXXX	Input Coding: Linear
01XXXXXXXX	Input Coding: u-law
10XXXXXXXX	Input Coding: A-law
11XXXXXXXX	Reserved for future use.
XX00XXXXXX	Input Data Format: 1's complement
XX01XXXXXX	Input Data Format: 2's complement

Value	Parameter Description
XX10XXXXXX	Input Data Format: Sign-Magnitude
XX11XXXXXX	Input Data Format: Unsigned
XXXX0XXXXX	Input Sample Size: 8 bit (only for Linear PCM)
XXXX1XXXXX	Input Sample Size: 16 bit (only for Linear PCM)
XXXXXnnnXX	Linear PCM Bit Position: number of bit positions that MSB of sample is away from starting at MSB (only for Linear PCM)
XXXXXXXX00	Air Coding Format: CVSD
XXXXXXXX01	Air Coding Format: u-law
XXXXXXXX10	Air Coding Format: A-law
XXXXXXXX11	Air Coding Format: Transparent Data

Default: When links are auto-accepted, the values written by the HCI_Write_Voice_Settings are used.

Retransmission_Effort: *1 octet*

Value	Parameter Description
0x00	No retransmissions
0x01	At least one retransmission, optimize for power consumption.
0x02	At least one retransmission, optimize for link quality.
0x03-0xFE	Reserved
0xFF	Don’t care

Default: Don't care

Packet_Type: *2 octets*

Value	Parameter Description
0x0001	HV1 may be used.
0x0002	HV2 may be used.
0x0004	HV3 may be used.
0x0008	EV3 may be used.
0x0010	EV4 may be used.
0x0020	EV5 may be used.
0x0040	2-EV3 may not be used.
0x0080	3-EV3 may not be used
0x0100	2-EV5 may not be used.

Value	Parameter Description
0x0200	3-EV5 may not be used.
0x0400	Reserved for future use
0x0800	Reserved for future use
0x1000	Reserved for future use
0x2000	Reserved for future use
0x4000	Reserved for future use
0x8000	Reserved for future use

Default: 0xFFFF - means all packet types may be used.

Return Parameters:

None

Event(s) generated (unless masked away):

The Accept_Synchronous_Request command will cause the Command Status event to be sent from the BR/EDR Controller when the BR/EDR Controller starts setting up the connection. When the link setup is complete, the local BR/EDR Controller will send a Synchronous Connection Complete event to its Host, and the remote BR/EDR Controller will send a Connection Complete event or a Synchronous Connection Complete event to the Host. The Synchronous Connection Complete will contain the Connection Handle and the link parameters if the setup is successful. No Command Complete event will be sent by the host controller as the result of this command.

7.1.28 Reject Synchronous Connection Request Command

Command	OCF	Command Parameters	Return Parameters
HCI_Reject_Synchronous_ Connection_Request	0x002A	BD_ADDR Reason	

Description:

The Reject_Synchronous_Connection_Request is used to decline an incoming request for a synchronous link. It shall only be issued after a Connection Request Event with Link Type equal to SCO or eSCO has occurred. The Connection Request Event contains the BD_ADDR of the device requesting the connection. The Reason parameter will be returned to the initiating host in the Status parameter of the Synchronous connection complete event on the remote side.

Command Parameters:

BD_ADDR: *6 octets*

Value	Parameter Description
0xXXXXXXXXXXXX	BD_ADDR of the device requesting the connection

Reason: *1 octet*

Value	Parameter Description
0x0D-0x0F	Host Reject Error Code. See “Error Codes” on page 335 [Part D] for error codes and descriptions.

Return Parameters:

None.

Event(s) Generated (unless masked away):

When the Host Controller receives the Reject_Synchronous_Connection_Request, it sends a Command Status Event to the Host. When the setup is terminated, the local Controller will send a Synchronous Connection Complete event to its Host, and the remote Controller will send a Connection Complete event or a Synchronous Connection Complete event to the Host with the Reason code from this command. No Command complete Event will be sent by the Host Controller to indicate that this command has been completed.

7.1.29 IO Capability Request Reply Command

Command	OCF	Command Parameters	Return Parameters
HCI_IO_Capability_ Request_Reply	0x002B	BD_ADDR, IO_Capability, OOB_Data_Present, Authentication_ Requirements	Status, BD_ADDR

Description:

The IO_Capability_Request_Reply command is used to reply to an IO Capability Request event from the controller, and specifies the current I/O capabilities of the host. This includes the host input, output and out-of-band (OOB) capabilities.

The Authentication_Requirements parameter shall be set to man-in-the middle (MITM) Protection Required Single Profile, MITM Protection Required – General Bonding, or MITM Protection Required – Dedicated Bonding if an authenticated link key is required by the Host. The Authentication_Requirements parameter may be set to MITM Protection Not Required - Single Profile, MITM Protection Not Required – General Bonding, or MITM Protection Not Required – Dedicated Bonding if an authenticated link key is not required. If one or both Hosts set the Authentication_Requirements parameter to MITM Protection Required - Single Profile, MITM Protection Required – General Bonding, or MITM Protection Required – Dedicated Bonding, the Link Managers shall use the IO_Capability parameter to determine the authentication procedure. A Host that sets the Authentication_Requirements parameter to MITM Protection Required - Single Profile, MITM Protection Required – General Bonding, or MITM Protection Required – All Profiles shall verify that the resulting Link Key type meets the security requirements.

If both Hosts set the Authentication_Requirements parameter to MITM Protection Not Required - Single Profile, MITM Protection Not Required – General Bonding, or MITM Protection Not Required – Dedicated Bonding, the Link Managers shall use the numeric comparison authentication procedure and the Hosts shall use the Just Works Association Model.

The OOB_Data_Present parameter shall be set to "OOB authentication data from remote device present" if the host has received OOB data from a device with the same BD_ADDR sent in the IO Capability Request event. Otherwise OOB_Data_Present shall be set to "OOB authentication data not present".

Command Parameters:

BD_ADDR: *Size: 6 Octets*

Value	Parameter Description
0xXXXXXXXXXXXX	BD_ADDR of remote device involved in simple pairing process

IO_Capability: *Size: 1 Octet*

Value	Parameter Description
0x00	DisplayOnly
0x01	DisplayYesNo
0x02	KeyboardOnly
0x03	NoInputNoOutput
0x04 - 0xFF	Reserved for future use

OOB_Data_Present: *Size: 1 Octet*

Value	Parameter Description
0x00	OOB authentication data not present
0x01	OOB authentication data from remote device present
0x02 - 0xFF	Reserved for future use

Authentication_Requirements: *Size: 1 Octet*

Value	Parameter Description
0x00	MITM Protection Not Required – No Bonding. Numeric comparison with automatic accept allowed.
0x01	MITM Protection Required – No Bonding. Use IO Capabilities to determine authentication procedure
0x02	MITM Protection Not Required – Dedicated Bonding. Numeric comparison with automatic accept allowed.
0x03	MITM Protection Required – Dedicated Bonding. Use IO Capabilities to determine authentication procedure
0x04	MITM Protection Not Required – General Bonding. Numeric Comparison with automatic accept allowed.
0x05	MITM Protection Required – General Bonding. Use IO capabilities to determine authentication procedure.
0x06 - 0xFF	Reserved for future use

Return Parameters:

Status: *Size: 1 Octet*

Value	Parameter Description
0x00	IO_Capability_Request_Reply command succeeded
0x01 - 0xFF	IO_Capability_Request_Reply command failed. See "Error Codes" on page 335 [Part D] for a list of error codes and descriptions.

BD_ADDR: *Size: 6 Octets*

Value	Parameter Description
0xXXXXXXXXXXXX	BD_ADDR of remote device involved in simple pairing process

Event(s) generated (unless masked away):

When the IO_Capability_Request_Reply command has completed, a Command Complete event shall be generated. When the device is the initiator of Secure Simple Pairing, an IO Capability Response event will be generated. Additionally, when the OOB_Data_Present parameter indicates that OOB authentication data from the remote device is present, the Remote OOB Data Request event will be generated.

7.1.30 User Confirmation Request Reply Command

Command	OCF	Command Parameters	Return Parameters
HCI_User_Confirmation_Request_Reply	0x002C	BD_ADDR	Status, BD_ADDR

Description:

The User_Confirmation_Request_Reply command is used to reply to a User Confirmation Request event and indicates that the user selected "yes". It is also used when the host has no input and no output capabilities.

Command Parameters:

BD_ADDR: *Size: 6 Octets*

Value	Parameter Description
0xXXXXXXXXXXXX	BD_ADDR of remote device involved in simple pairing process

Return Parameters:

Status: *Size: 1 Octet*

Value	Parameter Description
0x00	User_Confirmation_Request_Reply command succeeded
0x01 - 0xFF	User_Confirmation_Request_Reply command failed. See "Error Codes" on page 335 [Part D] for a list of error codes and descriptions.

BD_ADDR: *Size: 6 Octets*

Value	Parameter Description
0xXXXXXXXXXXXX	BD_ADDR of remote device involved in simple pairing process

Event(s) generated (unless masked away):

When the User_Confirmation_Request_Reply command has completed, a Command Complete event shall be generated.

7.1.31 User Confirmation Request Negative Reply Command

Command	OCF	Command Parameters	Return Parameters
HCI_User_Confirmation_ Request_Negative_Reply	0x002D	BD_ADDR	Status BD_ADDR

Description:

The User_Confirmation_Request_Negative_Reply command is used to reply to a User Confirmation Request event and indicates that the user selected "no". This command shall cause the initiating Link Manager to transmit an LMP_Numeric_Comparison_Failed PDU and terminate Secure Simple Pairing.

Command Parameters:

BD_ADDR: *Size: 6 Octets*

Value	Parameter Description
0xXXXXXXXXXXX X	BD_ADDR of remote device involved in simple pairing process

Return Parameters:

Status: *Size: 1 Octet*

Value	Parameter Description
0x00	User_Confirmation_Request_Negative_Reply command succeeded

Value	Parameter Description
0x01 - 0xFF	User_Confirmation_Request_Negative_Reply command failed. See "Error Codes" on page 335 [Part D] for a list of error codes and descriptions.

BD_ADDR: *Size: 6 Octets*

Value	Parameter Description
0xXXXXXXXXXXXX	BD_ADDR of remote device involved in simple pairing process

Event(s) generated (unless masked away):

When the User_Confirmation_Request_Negative_Reply command has completed, a Command Complete event shall be generated.

7.1.32 User Passkey Request Reply Command

Command	OCF	Command Parameters	Return Parameters
HCI_User_Passkey_Request_Reply	0x002E	BD_ADDR, Numeric_Value	Status, BD_ADDR

Description:

The User_Passkey_Request_Reply command is used to reply to a User Passkey Request event and specifies the Numeric_Value (passkey) entered by the user to be used in the Secure Simple Pairing process.

Command Parameters:

BD_ADDR: *Size: 6 Octets*

Value	Parameter Description
0xXXXXXXXXXXXX	BD_ADDR of remote device involved in simple pairing process

Numeric_Value: *Size: 4 Octets*

Value	Parameter Description
0x00000000 - 0x000F423F	Numeric value (passkey) entered by user. Valid values are decimal 000000 - 999999.

Return Parameters:

Status: *Size: 1 Octet*

Value	Parameter Description
0x00	User_Passkey_Request_Reply command succeeded
0x01 - 0xFF	User_Passkey_Request_Reply command failed. See "Error Codes" on page 335 [Part D] for a list of error codes and descriptions.

BD_ADDR: *Size: 6 Octets*

Value	Parameter Description
0xXXXXXXXXXXX	BD_ADDR of remote device involved in simple pairing process

Event(s) generated (unless masked away):

When the User_Passkey_Request_Reply command has completed, a Command Complete event shall be generated.

7.1.33 User Passkey Request Negative Reply Command

Command	OCF	Command Parameters	Return Parameters
HCI_User_Passkey_Request Negative_Reply	0x002F	BD_ADDR	Status, BD_ADDR

Description:

The User_Passkey_Request_Negative_Reply command is used to reply to a User Passkey Request event and indicates the host could not provide a pass-key. This command shall cause the initiating Link Manager to transmit an LMP_Passkey_Entry_Failed PDU and terminate Simple Pairing.

Command Parameters:

BD_ADDR: *Size: 6 Octets*

Value	Parameter Description
0xXXXXXXXXXXX X	BD_ADDR of remote device involved in simple pairing process

Return Parameters:

Status: *Size: 1 Octet*

Value	Parameter Description
0x00	User_Passkey_Request_Negative_Reply command succeeded
0x01 - 0xFF	User_Passkey_Request_Negative_Reply command failed. See “Error Codes” on page 335 [Part D] for a list of error codes and descriptions.

BD_ADDR: *Size: 6 Octets*

Value	Parameter Description
0xXXXXXXXXXXX X	BD_ADDR of remote device involved in simple pairing process

Event(s) generated (unless masked away):

When the User_Passkey_Negative_Request_Reply command has completed, a Command Complete event shall be generated.

7.1.34 Remote OOB Data Request Reply Command

Command	OCF	Command Parameters	Return Parameters
HCI_Remote_OOB_Data_Request_Reply	0x0030	BD_ADDR, C, R	Status, BD_ADDR

Description:

The Remote_OOB_Data_Request_Reply command is used to reply to a Remote OOB Data Request event with the C and R values received via an OOB transfer from a remote device identified by BD_ADDR. If the R value is not present in the received OOB data from the remote device, the Host shall set R to zeros.

Command Parameters:

BD_ADDR: *Size: 6 Octets*

Value	Parameter Description
0xXXXXXXXXXXXX	BD_ADDR of remote device from which the C and R values were received

C: *Size: 16 Octets*

Value	Parameter Description
0xXXXXXXXXXXXXXXXXXXXXXXXXXXXXXXXX	Simple Pairing Hash C

R: *Size: 16 Octets*

Value	Parameter Description
0xXXXXXXXXXXXXXXXXXXXXXXXXXXXXXXXX	Simple Pairing Randomizer R

Return Parameters:

Status: *Size: 1 Octet*

Value	Parameter Description
0x00	Remote_OOB_Data_Request_Reply command succeeded
0x01 - 0xFF	Remote_OOB_Data_Request_Reply command failed. See “Error Codes” on page 335 [Part D] for a list of error codes and descriptions.

BD_ADDR: *Size: 6 Octets*

Value	Parameter Description
0xXXXXXXXXXXX X	BD_ADDR of remote device involved in simple pairing process

Event(s) generated (unless masked away):

When the Remote_OOB_Data_Request_Reply command has completed, a Command Complete event shall be generated.

7.1.35 Remote OOB Data Request Negative Reply Command

Command	OCF	Command Parameters	Return Parameters
HCI_Remote_OOB_Data_ Request_Negative_Reply	0x0033	BD_ADDR	Status, BD_ADDR

Description:

The Remote_OOB_Data_Request_Negative_Reply command is used to reply to a Remote OOB Data Request event that the Host does not have the C and R values associated with the remote device identified by BD_ADDR.

Command Parameters:

BD_ADDR: *Size: 6 Octets*

Value	Parameter Description
0xXXXXXXXXXXXX	BD_ADDR of remote device

Return Parameters:

Status: *Size: 1 Octet*

Value	Parameter Description
0x00	Remote_OOB_Data_Request_Negative_Reply command succeeded
0x01 - 0xFF	Remote_OOB_Data_Request_Negative_Reply command failed. See “Error Codes” on page 335 [Part D] for a list of error codes and descriptions.

BD_ADDR: *Size: 6 Octets*

Value	Parameter Description
0xXXXXXXXXXXXX	BD_ADDR of remote device involved in simple pairing process

Event(s) generated (unless masked away):

When the Remote_OOB_Data_Request_Negative_Reply command has completed, a Command Complete event shall be generated.

7.1.36 IO Capability Request Negative Reply Command

Command	OCF	Command Parameters	Return Parameters
HCI_IO_Capability Request_Negative_Reply	0x0034	BD_ADDR, Reason	Status, BD_ADDR

Description:

The IO_Capability_Request_Negative_Reply command shall be used to reject a pairing attempt after an HCI IO Capability Request event has been received by the Host. The reason for the rejection is given in the Reason parameter. Error code 0x37 (Simple Pairing not Supported by Host) shall not be used in the Reason parameter.

Command Parameters:

BD_ADDR: *Size: 6 Octets*

Value	Parameter Description
0xXXXXXXXXXXXX	BD_ADDR of remote device involved in the Simple Pairing process

Reason: *Size: 1 Octet*

Value	Parameter Description
0xXX	Reason that Simple Pairing rejected. See “Error Codes” on page 335 [Part D] for a list of error codes and descriptions.

Return Parameters:

Status: *Size: 1 Octet*

Value	Parameter Description
0x00	IO_Capability_Request_Negative_Reply command succeeded.
0x01 - 0xFF	IO_Capability_Request_Negative_Reply command failed. See “Error Codes” on page 335 [Part D] for a list of error codes and descriptions.

BD_ADDR: *Size: 6 Octets*

Value	Parameter Description
0xXXXXXXXXXXXX	BD_ADDR of remote device involved in Simple Pairing process

Event(s) generated (unless masked away):

When the IO_Capability_Request_Negative_Reply command has completed, a Command Complete event shall be generated.

7.1.37 Create Physical Link Command

Command	OCF	Command Parameters	Return Parameters
HCI_Create_Physical_Link	0x0035	Physical_Link_Handle, Dedicated_AMP_Key_Length, Dedicated_AMP_Key_Type, Dedicated_AMP_Key	

Description:

When this command is received by an AMP Controller, the AMP Controller shall initiate a connection to another AMP Controller. The AMP_ASSOC used to create the physical link shall be written to the AMP Controller using the Write Remote AMP_ASSOC command following the Create Physical Link command.

The Dedicated_AMP_Key_Length parameter is used by the Host to indicate the number of valid octets of the Dedicated_AMP_Key. The AMP shall use the supplied key to generate a session key in order to encrypt all data on the indicated physical link. The method by which to do this is AMP type specific. The Dedicated_AMP_Key_Type parameter indicates whether the key is an authenticated combination key, an unauthenticated combination key, or a debug combination key.

Command Parameters:

Figure 7.1: Physical _Link_Handle:Size: 1 Octet

Value	Parameter Description
0xXX	Physical Link Handle identifying the physical link to be created (see Section 5.3.2).
0	Reserved

Dedicated_AMP_Key_Length: *Size: 1 Octet*

Value	Parameter Description
0	Reserved
0xXX	See Assigned Numbers.
33-255	Reserved

Dedicated_AMP_Key_Type: *Size: 1 Octet*

Value	Parameter Description
0x00	Reserved
0x01	Reserved
0x02	Reserved
0x03	Debug combination keys
0x04	Unauthenticated combination key
0x05	Authenticated combination key
0x06	Reserved
0x07-0xFF	Reserved

Dedicated_AMP_Key: *Size: AMP_Key_Length Octets*

Value	Parameter Description
0xXX...XX	Dedicated AMP Key for the assocated AMP. The Dedicated AMP Key is a multi-octet integeer.

Return Parameters:

None

Event(s) generated (unless masked away):

When the AMP Controller receives the Create Physical Link command, the AMP Controller sends the Command Status event to the Host. When the AMP Controller has determined underlying connection details to populate the AMP_ASSOC the AMP Controller shall generate a Channel Selected event to the Host. After the Channel Selected event is received the Host uses the Read Local AMP_ASSOC command to obtain the capabilities and status of the local AMP. The AMP_ASSOC is sent to the remote AMP to be used to perform a matching Accept Physical Link command. When the connection has been completed the AMP Controller on both BR/EDR Controllers that form the connection shall send a Physical Link Complete event to its Host. The Physical Link Complete event indicates to the Host whether the physical link creation was successful. This sequence must be completed before any Logical Links using this Controller can be created.

If the AMP physical link security establishment process fails (for instance, if the two AMP Controllers do not have matching keys) then the physical link shall be disconnected and the Physical Link Complete event shall be sent to the Host with the Authentication Failure error code see [Part D], Error Codes, Section on page 335.

Note: No Command Complete event will be sent by the AMP Controller to indicate that this command has been completed. Instead, the Physical Link Complete event will indicate that this command has been completed.

7.1.38 Accept Physical Link Command

Command	OCF	Command Parameters	Return Parameters
HCI_Accept_Physical_Link	0x0036	Physical_Link_Handle, Dedicated_AMP_Key_Length, Dedicated_AMP_Key_Type, Dedicated_AMP_Key	

Description:

When this command is received by an AMP Controller, the AMP Controller shall attempt to accept a connection request from the initiating BR/EDR Controller's AMP Controller. The AMP_ASSOC used to create the physical link shall be written to the AMP Controller using the Write Remote AMP_ASSOC command after issuing the Accept Physical Link command.

The Dedicated_AMP_Key_Length parameter is used by the Host to indicate the number of valid octets of the Dedicated_AMP_Key. The AMP shall use the Dedicated_AMP_Key for AMP type-specific security functions. The Dedicated_AMP_Key_Type parameter indicates whether the key is an authenticated combination key, an unauthenticated combination key, or a debug combination key.

Command Parameters:

Physical_Link_Handle: *Size: 1 Octet*

Value	Parameter Description
0xXX	Physical Link Handle identifying the physcial link to be created.

Dedicated_AMP_Key_Length: *Size: 1 Octet*

Value	Parameter Description
0x00	Reserved
0xXX	See Assigned Numbers.
33-255	Reserved

Dedicated_AMP_Key_Type *Size: 1 Octet*

Value	Parameter Description
0x00	Reserved

Value	Parameter Description
0x01	Reserved
0x02	Reserved
0x03	Debug combination key
0x04	Authenticated combination key
0x05	Unauthenticated combination key
0x06	Reserved
0x07-0xFF	Reserved

Dedicated_AMP_Key *Size: Dedicated_AMP_Key_Length Octets*

Value	Parameter Description
0xXX..XX	Dedicated AMP Key for the assocated AMP. The Dedicated AMP Key is a mult-octet integeer.

Return Parameters:

None

Event(s) generated (unless masked away):

When the AMP Controller receives the Accept Physical Link command, the AMP Controller sends the Command Status event to the Host. When the connection has been completed, the AMP Controller shall send a Physical Link Complete event to the Host. The Physical Link Complete event indicates to the Host whether the link creation was successful. This sequence must be completed before any Logical Links can be created.

If communication is not established within the Connection Accept Timeout then a Physical Link Complete event shall be returned with a Status value of Connection Accept Timeout Exceeded (0X10).

If the AMP-specific security establishment process fails (for instance, if the two AMP Controllers do not have matching keys) then the physical link shall be deleted and the Physical Link Complete event sent to the Host with the Authentication Failure error code.

No Physical Link Complete event shall be sent before the security is established.

Note: No Command Complete event will be sent by the AMP Controller to indicate that this command has been completed. Instead, the Physical Link Complete event will indicate that this command has been completed.

7.1.39 Disconnect Physical Link Command

Command	OCF	Command Parameters	Return Parameters
HCI_Disconnect_Physical_Link	0x0037	Physical_Link_Handle, Reason	

Description:

When the Disconnect Physical Link command is received by an AMP Controller, the AMP Controller shall terminate the AMP physical link indicated by the Physical Link Handle parameter. The Reason parameter indicates the reason for ending the connection. The remote BR/EDR Controller will receive the Reason parameter in the Disconnection Physical Link Complete event.

All logical links on a physical link should be disconnected before the physical link is disconnected.

The Disconnect Physical Link command may be used to cancel the creation of a physical link, before the Physical Link Complete event for this link has been generated.

Command Parameters:

Physical_Link_Handle: *Size: 1 Octet*

Value	Parameter Description
0xXX	Physical Link Handle identifying the physical link which has been created.

Reason: *Size: 1 Octet*

Value	Parameter Description
0x05, 0x13-0x16, 0x1A	Authentication Failure error code (0x05), Other End Terminated Connection error codes (0x13-0x16), Unsupported Remote Feature error code (0x1A), see “Error Codes” on page 335 [Part D] for a list of error codes and descriptions.

Return Parameters:

None

Event(s) generated (unless masked away):

When the AMP Controller receives the Disconnect Physical Link command, a Command Status event shall be sent to the Host. The Disconnection Physical Link Complete event occurs at both Hosts when the termination of the connection has completed, and indicates that this command has been completed.

The Disconnect Physical Link command may be used to cancel the creation of a physical link. In such a case, the Physical Link Complete event for the corresponding Create Physical Link or Accept Physical Link command shall always be sent. The Physical Link Complete event shall be sent after the Disconnection Physical Link Complete event, in the case the Controller has already issued a Command Status event for the Disconnect Physical Link command, thus treating it as a creation cancel. If the cancellation was successful, the Physical Link Complete event shall be generated with the error code Unknown Connection Identifier (0x02).

Note: No Command Complete event will be sent by the AMP Controller to indicate that this command has been completed. Instead, the Disconnection Physical Link Complete event will indicate that this command has been completed.

7.1.40 Create Logical Link Command

Command	OCF	Command Parameters	Return Parameters
HCI_Create_Logical_Link	0x0038	Physical_Link_Handle, Tx_Flow_Spec, Rx_Flow_Spec	

Description:

When the Create Logical Link Command is received by an AMP Controller, the AMP Controller shall create a logical connection to the remote AMP Controller identified by the physical link handle.

The Flow_Spec structures define the traffic requirements of the link. The Flow Spec ID values in the Tx/Rx parameters identify the logical link.

A logical link can be created between two devices that are already joined by a physical link. In order to create a logical link the Create Logical Link command is called on one device (the initiating device) and the Accept Logical Link command is called on the other device (the responding device). The Flow_Spec information must match for the two calls (see Section 5.6 and Section 9.1 [Vol 3] Part A).

The AMP Controller may refuse to create the logical link if it has insufficient resources. If the AMP Controller is already in the process of creating one or more logical links, it may reject a Create Logical Link command with the error code "Busy" (see [Vol 2 Part D], Section 2.55. When the Host receives this error code, it shall wait until a previous logical link creation completes before requesting another logical link.

The logical link must be completed before the Logical Link Accept Timeout expires on the local AMP.

Command Parameters:

Physical_Link_Handle: *Size: 1 Octet*

Value	Parameter Description
0xXX	Physical Link Handle over which the logical link is to be established.

Tx_Flow_Spec: *Size: 16 Octets*

Parameter Description
Extended Flow Specification value defining transmitted traffic. See Section 5.6[Vol 3] Part A.

Rx_Flow_Spec: *Size: 16 Octets*

Parameter Description
Extended Flow Specification value defining received traffic. (See Section 5.6[Vol 3] Part A).

Return Parameters:

None

Event(s) generated (unless masked away):

When the AMP Controller receives the Create Logical Link command, the AMP Controller sends the Command Status event to the Host. In addition, when the AMP Controller determines the logical link is established, the AMP Controller shall send a Logical Link Complete event to each Host. The Logical Link Complete event contains the Logical Link Handle, Physical Link Handle, and the corresponding flow spec ID if this command is successful.

Note: No Command Complete event will be sent by the AMP Controller to indicate that this command has been completed. Instead, the Logical Link Complete event will indicate that this command has been completed.

7.1.41 Accept Logical Link Command

Command	OCF	Command Parameters	Return Parameters
HCI_Accept_Logical_Link	0x0039	Physical_Link_Handle, Tx_Flow_Spec, Rx_Flow_Spec	

Description:

When the Accept Logical Command is received by an AMP Controller, the AMP Controller shall attempt to accept a logical link with the remote AMP Controller identified by the physical link handle.

The Flow_Spec structures define the traffic requirements of the link. The Flow Spec ID in the Tx/Rx parameter values identify the logical link.

A logical link may be created between two devices which are already joined by a physical link. In order to create a logical link the Create Logical Link command is called on one device (the initiating device) and the Accept Logical Link command is called on the other device (the responding device). The Flow_Spec information must match for the two calls. See Section 5.6and Section 9.1 [Vol 3] Part A for how this is achieved.

The AMP Controller may refuse to create the logical link if it has insufficient resources.

The logical link must be completed before the Logical Link Accept Timeout expires on the local AMP.

Command Parameters:

Physical_Link_Handle: *Size: 1 Octet*

Value	Parameter Description
0xXX	Physical Link Handle over which the logical link is to be established.

Tx_Flow_Spec: *Size: 16 Octets*

Parameter Description
Extended Flow Specification value defining transmitted traffic (see Logical Link Control and Adaptation Protocol Specification Section 5.6[Vol 3] Part A).

Rx_Flow_Spec: *Size: 16 Octets*

Parameter Description
Extended Flow Specification value defining received traffic (see Logical Link Control and Adaptation Protocol SpecificationSection 5.6[Vol 3] Part A).

Return Parameters:

None.

Event(s) generated (unless masked away):

When the AMP Controller receives the Accept Logical Link command, the AMP Controller sends the Command Status event to the Host. In addition, when the AMP Controller determines the logical link is established, it shall send a Logical Link Complete event to each Host. This action shall occur on both controllers that form the connection.The Logical Link Complete event contains the Logical Link Handle if this command is successful.

Note: No Command Complete event will be sent by the AMP Controller to indicate that this command has been completed. Instead, the Logical Link Complete event will indicate that this command has been completed.

7.1.42 Disconnect Logical Link Command

Command	OCF	Command Parameters	Return Parameters
HCI_ Disconnect_Logical_Link	0x003A	Logical_Link_Handle	

Description:

When the Disconnect Logical Link command is received by an AMP Controller it shall terminate the designated logical link on the local Controller. The Logical_Link_Handle command parameter indicates which logical link is to be disconnected.

Command Parameters:

Logical_Link_Handle: *Size: 2 Octets (12 Bits meaningful)*

Value	Parameter Description
0xXXXX	Logical Link Handle for the logical link being disconnected. Range: 0x0000-0x0EFF (0x0F00 - 0x0FFF Reserved for future use)

Return Parameters:

None.

Event(s) generated (unless masked away):

When the AMP Controller receives the Disconnect Logical Link command it sends the Command Status event to the Host. The Disconnection Logical Link Complete event will occur at the Host when the termination of the logical link has completed, and indicates that this command has been completed.

Note: No Command Complete event will be sent by the AMP Controller to indicate that this command has been completed. Instead, the Disconnection Logical Link Complete event will indicate that this command has been completed.

7.1.43 Logical Link Cancel Command

Command	OCF	Command Parameters	Return Parameters
HCI_Logical_Link_Cancel	0x003B	Physical_Link_Handle, Tx_Flow_Spec_ID	Status, Physical_Link_Handle, Tx_Flow_Spec_ID

Description:

When the Logical Link Cancel command is received by an AMP Controller, the Host shall request cancellation of the ongoing logical link creation process identified by the Physical_Link_Handle and the Tx_Flow_Spec_ID.

Command Parameters:

Physical_Link_Handle: *Size: 1 Octet*

Value	Parameter Description
0xXX	Physical Link Handle over which the logical link is to be established.

Tx_Flow_Spec_ID: *Size: 1 Octet*

Value	Parameter Description
0xXX	Flow Spec ID identifying the logical link whose creation is being cancelled. This matches the ID field of the Tx_Flow_Spec in the matching Create or Accept Logical Link command.

Return Parameters:

Status: *Size: 1 Octet*

Value	Parameter Description
0x00	Logical Link Cancel command succeeded
0x01-0xFF	Logical Link Cancel command failed. See “Error Codes” on page 335 [Part D] for list of error codes.

Physical_Link_Handle: *Size: 1 Octet*

Value	Parameter Description
0xXX	Physical Link Handle identifying the logical link creation being cancelled.

Tx_Flow_Spec_ID: *Size: 1 Octet*

Value	Parameter Description
0xXX	Flow Spec ID identifying the logical link creation being cancelled. This matches the ID field of the Tx_Flow_Spec in the matching Create or Accept Logical Link command.

Event(s) generated (unless masked away):

When the Logical Link Cancel command has completed, a Command Complete event shall be generated.

If the logical link is already established by the Controller, but the AMP Controller has not yet sent the Logical Link Complete event, then the local Controller shall detach the logical link and return a Command Complete event with the status "Success".

If the logical link is already established, and the Logical Link Complete event has been sent, then the AMP Controller shall return a Command Complete event with the error code ACL Connection already exists (0x0B).

If the Logical Link Cancel command is sent to the AMP Controller without a preceding Create or Accept Logical Link command to the same device, the Controller shall return a Command Complete event with the error code Unknown Connection Identifier (0x02).

The Logical Link Complete event for the corresponding Create Logical Link Command shall always be sent. The Logical Link Complete event shall be sent after the Command Complete event for the Logical Link Cancel command. If the cancellation was successful, the Logical Link Complete event will be generated with the error code Unknown Connection Identifier (0x02).

7.1.44 Flow Spec Modify Command

Command	OCF	Command Parameters	Return Parameters
HCI_Flow_Spec_Modify	0x003C	Handle, Tx_Flow_Spec, Rx_Flow_Spec	

Description:

When the Flow Spec Modify command is received by an AMP Controller, the AMP Controller shall modify the Flow Spec of the logical connection identified by the Link Handle.

Matching commands will be issued on both devices. This ensures that both Controllers have full knowledge of the traffic requirements on this logical link, in both directions. Each Controller is responsible for meeting its own Tx Flow specification.

The Flow Spec Modify command cannot be used to change the Identifier or the Service Type fields of an existing Handle's Flow Spec.

Command Parameters:

Handle: *Size: 2 Octets (12 Bits meaningful)*

Value	Parameter Description
0xXXXX	Handle if the receiving Controller is a BR/EDR Controller. Logical Link Handle, if the receiving Controller is an AMP Controller, identifying the logical link to be changed. Range: 0x0000-0x0EFF (0x0F00 - 0x0FFF Reserved for future use

Tx_Flow_Spec: *Size: 16 Octets*

Parameter Description
Extended Flow Specification value defining transmitted traffic (see Logical Link Control and Adaptation Protocol Specification Section 5.6[Vol 3] Part A).

Rx_Flow_Spec: *Size: 16 Octets*

Parameter Description
Extended Flow Specification value defining received traffic (see Logical Link Control and Adaptation Protocol SpecificationSection 5.6[Vol 3] Part A).

Return Parameters:

None.

Event(s) generated (unless masked away):

When the AMP Controller receives the Flow Spec Modify command, the AMP Controller sends the Command Status event to the Host. When each AMP Controller has completed the change a Flow Spec Modify Complete event shall be sent to the Host. If the modify fails, the controllers shall revert to previously specified values.

Note: No Command Complete event will be sent by the AMP Controller to indicate that this command has been completed. Instead, the Flow Spec Modify Complete event will indicate that this command has been completed.

7.2 LINK POLICY COMMANDS

The Link Policy Commands provide methods for the Host to affect how the Link Manager manages the piconet. When Link Policy Commands are used, the LM still controls how Bluetooth piconets and scatternets are established and maintained, depending on adjustable policy parameters. These policy commands modify the Link Manager behavior that can result in changes to the link layer connections with Bluetooth remote devices.

Note: only one ACL connection can exist between two BR/EDR Controllers, and therefore there can only be one ACL HCI Connection Handle for each physical

link layer Connection. The BR/EDR Controller provides policy adjustment mechanisms to provide support for a number of different policies. This capability allows one Bluetooth module to be used to support many different usage models, and the same Bluetooth module can be incorporated in many different types of BR/EDR Controllers.

For the Link Policy Commands, the OGF is defined as 0x02.

7.2.1 Hold Mode Command

Command	OCF	Command Parameters	Return Parameters
HCI_Hold_Mode	0x0001	Connection_Handle, Hold_Mode_Max_Interval, Hold_Mode_Min_Interval	

Description:

The Hold_Mode command is used to alter the behavior of the Link Manager, and have it place the ACL baseband connection associated by the specified Connection Handle into the hold mode. The Hold_Mode_Max_Interval and Hold_Mode_Min_Interval command parameters specify the length of time the Host wants to put the connection into the hold mode. The local and remote devices will negotiate the length in the hold mode. The Hold_Mode_Max_Interval parameter is used to specify the maximum length of the Hold interval for which the Host may actually enter into the hold mode after negotiation with the remote device. The Hold interval defines the amount of time between when the Hold Mode begins and when the Hold Mode is completed. The Hold_Mode_Min_Interval parameter is used to specify the minimum length of the Hold interval for which the Host may actually enter into the hold mode after the negotiation with the remote device. Therefore the Hold_Mode_Min_Interval cannot be greater than the Hold_Mode_Max_Interval. The BR/EDR Controller will return the actual Hold interval in the Interval parameter of the Mode Change event, if the command is successful. This command enables the Host to support a low-power policy for itself or several other BR/EDR Controllers, and allows the devices to enter Inquiry Scan, Page Scan, and a number of other possible actions.

Note: the Connection Handle cannot be of the SCO or eSCO link type
If the Host sends data to the BR/EDR Controller with a Connection_Handle corresponding to a connection in hold mode, the BR/EDR Controller will keep the data in its buffers until either the data can be transmitted (the hold mode has ended) or a flush, a flush timeout or a disconnection occurs. This is valid even if the Host has not yet been notified of the hold mode through a Mode Change event when it sends the data.

Note: The above is not valid for an HCI Data Packet sent from the Host to the BR/EDR Controller on the master side where the Connection_Handle is a

Connection_Handle used for broadcast and the Broadcast_Flag is set to Active Broadcast or Piconet Broadcast. The broadcast data will then never be received by slaves in hold mode.

The Hold_Mode_Max_Interval shall be less than the Link Supervision Timeout configuration parameter.

Command Parameters:

Connection_Handle: *Size: 2 Octets (12 Bits meaningful)*

Value	Parameter Description
0xXXXX	Connection Handle to be used to identify a connection. Range: 0x0000-0x0EFF (0x0F00 - 0x0FFF Reserved for future use)

Hold_Mode_Max_Interval: *Size: 2 Octets*

Value	Parameter Description
N = 0xXXXX	Maximum acceptable number of Baseband slots to wait in Hold Mode. Time Length of the Hold = N * 0.625 msec (1 Baseband slot) Range for N: 0x0002-0xFFFE; only even values are valid. Time Range: 1.25ms - 40.9 sec Mandatory Range: 0x0014 to 0x8000

Hold_Mode_Min_Interval: *Size: 2 Octets*

Value	Parameter Description
N = 0xXXXX	Minimum acceptable number of Baseband slots to wait in Hold Mode. Time Length of the Hold = N * 0.625 msec (1 Baseband slot) Range for N: 0x0002-0xFF00; only even values are valid Time Range: 1.25 msec - 40.9 sec Mandatory Range: 0x0014 to 0x8000

Return Parameters:

None.

Event(s) generated (unless masked away):

The BR/EDR Controller sends the Command Status event for this command to the Host when it has received the Hold_Mode command. The Mode Change event will occur when the Hold Mode has started and the Mode Change event will occur again when the Hold Mode has completed for the specified Connection Handle. The Mode Change event signaling the end of the Hold Mode is an estimation of the hold mode ending if the event is for a remote BR/EDR Controller.

Note: no Command Complete event will be sent by the Controller to indicate that this command has been completed. Instead, only the Mode Change event will indicate that this command has been completed. If an error occurs after the Command Status event has occurred, then the status in the Mode Change event will indicate the error.

7.2.2 Sniff Mode Command

Command	OCF	Command Parameters	Return Parameters
HCI_Sniff_Mode	0x0003	Connection_Handle, Sniff_Max_Interval, Sniff_Min_Interval, Sniff_Attempt, Sniff_Timeout	

Description:

The Sniff Mode command is used to alter the behavior of the Link Manager and have it place the ACL baseband connection associated with the specified Connection Handle into the sniff mode. The Connection_Handle command parameter is used to identify which ACL link connection is to be placed in sniff mode. The Sniff_Max_Interval and Sniff_Min_Interval command parameters are used to specify the requested acceptable maximum and minimum periods in the Sniff Mode. The Sniff_Min_Interval shall not be greater than the Sniff_Max_Interval. The sniff interval defines the amount of time between each consecutive sniff period. The BR/EDR Controller will return the actual sniff interval in the Interval parameter of the Mode Change event, if the command is successful. For a description of the meaning of the Sniff_Attempt and Sniff_Timeout parameters, see Baseband Specification, Section 8.7, on page 178. Sniff_Attempt is there called $N_{sniff\ attempt}$ and Sniff_Timeout is called $N_{sniff\ timeout}$. This command enables the Host to support a low-power policy for itself or several other BR/EDR Controllers, and allows the devices to enter Inquiry Scan, Page Scan, and a number of other possible actions.

Note: In addition, the Connection Handle cannot be one of the synchronous link types. If the Host sends data to the BR/EDR Controller with a Connection_Handle corresponding to a connection in sniff mode, the BR/EDR Controller will keep the data in its buffers until either the data can be transmitted or a flush, a flush timeout or a disconnection occurs. This is valid even if the Host has not yet been notified of the sniff mode through a Mode Change event when it sends the data. Note that it is possible for the master to transmit data to a slave without exiting sniff mode (see description in Baseband Specification, Section 8.7, on page 178).

Note: The above is not valid for an HCI Data Packet sent from the Host to the BR/EDR Controller on the master side where the Connection_Handle is a Connection_Handle used for broadcast and the Broadcast_Flag is set to Active Broadcast or Piconet Broadcast. In that case, the broadcast data will only be

received by a slave in sniff mode if that slave happens to listen to the master when the broadcast is made.

The Sniff_Max_Interval shall be less than the Link Supervision Timeout configuration parameter.

Command Parameters:

Connection_Handle: *Size: 2 Octets (12 Bits meaningful)*

Value	Parameter Description
0xXXXX	Connection Handle to be used to identify a connection. Range: 0x0000-0x0EFF (0x0F00 - 0x0FFF Reserved for future use)

Sniff_Max_Interval: *Size: 2 Octets*

Value	Parameter Description
N = 0xXXXX	Range: 0x0002 to 0xFFFE; only even values are valid Mandatory Range: 0x0006 to 0x0540 Time = N * 0.625 msec Time Range: 1.25 msec to 40.9 sec

Sniff_Min_Interval: *Size: 2 Octets*

Value	Parameter Description
N = 0xXXXX	Range: 0x0002 to 0xFFFE; only even values are valid Mandatory Range: 0x0006 to 0x0540 Time = N * 0.625 msec Time Range: 1.25 msec to 40.9 sec

Sniff_Attempt: *Size: 2 Octets*

Value	Parameter Description
N = 0xXXXX	Number of Baseband receive slots for sniff attempt. Length = N* 1.25 msec Range for N: 0x0001 – 0x7FFF Time Range: 1.25msec - 40.9 Seconds Mandatory Range for Controller: 1 to $T_{sniff}/2$

Sniff_Timeout: *Size: 2 Octets*

Value	Parameter Description
N = 0xXXXX	Number of Baseband receive slots for sniff timeout. Length = N * 1.25 msec Range for N: 0x0000 – 0x7FFF Time Range: 0 msec - 40.9 Seconds Mandatory Range for Controller: 0 to 0x0028

Return Parameters:

None.

Event(s) generated (unless masked away):

The BR/EDR Controller sends the Command Status event for this command to the Host when it has received the Sniff_Mode command. The Mode Change event will occur when the Sniff Mode has started for the specified Connection Handle.

Note: No Command Complete event will be sent by the BR/EDR Controller to indicate that this command has been completed. Instead only the Mode Change event will indicate that this command has been completed. If an error occurs after the Command Status event has occurred, then the status in the Mode Change event will indicate the error.

7.2.3 Exit Sniff Mode Command

Command	OCF	Command Parameters	Return Parameters
HCI_Exit_Sniff_Mode	0x0004	Connection_Handle	

Description:

The Exit_Sniff_Mode command is used to end the sniff mode for a Connection Handle, which is currently in sniff mode. The Link Manager will determine and issue the appropriate LMP commands to remove the sniff mode for the associated Connection Handle.

Note: in addition, the Connection Handle cannot be one of the synchronous link types.

Command Parameters:

Connection_Handle: *Size: 2 Octets (12 Bits meaningful)*

Value	Parameter Description
0xXXXX	Connection Handle to be used to identify a connection. Range: 0x0000-0x0EFF (0x0F00 - 0x0FFF Reserved for future use)

Return Parameters:

None.

Event(s) generated (unless masked away):

A Command Status event for this command will occur when BR/EDR Controller has received the Exit_Sniff_Mode command. The Mode Change event will occur when the Sniff Mode has ended for the specified Connection Handle.

Note: No Command Complete event will be sent by the BR/EDR Controller to indicate that this command has been completed. Instead, only the Mode Change event will indicate that this command has been completed.

7.2.4 Park State Command

Command	OCF	Command Parameters	Return Parameters
HCI_Park_State	0x0005	Connection_Handle, Beacon_Max_Interval, Beacon_Min_Interval	

Description:

The Park State command is used to alter the behavior of the Link Manager, and have the LM place the baseband connection associated by the specified Connection Handle into Park state. The Connection_Handle command parameter is used to identify which connection is to be placed in Park state. The Connection_Handle must be a Connection_Handle for an ACL connection. The Beacon Interval command parameters specify the acceptable length of the interval between beacons. However, the remote device may request shorter interval. The Beacon_Max_Interval parameter specifies the acceptable longest length of the interval between beacons. The Beacon_Min_Interval parameter specifies the acceptable shortest length of the interval between beacons. Therefore, the Beacon Min Interval cannot be greater than the Beacon Max Interval. The BR/EDR Controller will return the actual Beacon interval in the Interval parameter of the Mode Change event, if the command is successful. This command enables the Host to support a low-power policy for itself or several other BR/EDR Controllers, allows the devices to enter Inquiry Scan, Page Scan, provides support for large number of BR/EDR Controllers in a single piconet, and a number of other possible activities.

Note: when the Host issues the Park State command, no Connection Handles for synchronous connections are allowed to exist to the remote device that is identified by the Connection_Handle parameter. If one or more Connection Handles for synchronous connections exist to that device, depending on the implementation, a Command Status event or a Mode Change event (following a Command Status event where Status=0x00) will be returned with the error code 0x0C *Command Disallowed*.

If the Host sends data to the BR/EDR Controller with a Connection_Handle corresponding to a parked connection, the BR/EDR Controller will keep the data in its buffers until either the data can be transmitted (after unpark) or a flush, a flush tim-

eout or a disconnection occurs. This is valid even if the Host has not yet been notified of park state through a Mode Change event when it sends the data.

Note: the above is not valid for an HCI Data Packet sent from the Host to the BR/EDR Controller on the master side where the Connection_Handle is a Connection_Handle used for Piconet Broadcast and the Broadcast_Flag is set to Piconet Broadcast. In that case, slaves in park state will also receive the broadcast data. (If the Broadcast_Flag is set to Active Broadcast, the broadcast data will usually not be received by slaves in park state.)
It is possible for the Controller to do an automatic unpark to transmit data and then park the connection again depending on the value of the Link_Policy_Settings parameter (see Write_Link_Policy_Settings) and depending on whether the implementation supports this or not (optional feature). The optional feature of automatic unpark/park can also be used for link supervision. Whether Mode Change events are returned or not at automatic unpark/park if this is implemented, is vendor specific. This could be controlled by a vendor specific HCI command.

Command Parameters:

Connection_Handle: *Size: 2 Octets (12 Bits meaningful)*

Value	Parameter Description
0xXXXX	Connection Handle to be used to identify a connection. Range: 0x0000-0x0EFF (0x0F00 - 0x0FFF Reserved for future use)

Beacon_Max_Interval: *Size: 2 Octets*

Value	Parameter Description
N = 0xXXXX	Range: 0x000E to 0xFFFE; only even values are valid Mandatory Range: 0x000E to 0x1000 Time = N * 0.625 msec Time Range: 8.75 msec to 40.9 sec

Beacon_Min_Interval *Size: 2 Octets*

Value	Parameter Description
N = 0xXXXX	Range: 0x000E to 0xFFFE; only even values are valid Mandatory Range: 0x000E to 0x1000 Time = N * 0.625 msec Time Range: 8.75 msec to 40.9 sec

Return Parameters:

None.

Event(s) generated (unless masked away):

The BR/EDR Controller sends the Command Status event for this command to the Host when it has received the Park State command. The Mode Change event will occur when the Park State has started for the specified Connection Handle.

Note: no Command Complete event will be sent by the BR/EDR Controller to indicate that this command has been completed. Instead, only the Mode Change event will indicate that this command has been completed. If an error occurs after the Command Status event has occurred, then the status in the Mode Change event will indicate the error.

7.2.5 Exit Park State Command

Command	OCF	Command Parameters	Return Parameters
HCI_Exit_Park_State	0x0006	Connection_Handle	

Description:

The Exit_Park_State command is used to switch the BR/EDR Controller from park state back to the active mode. This command may only be issued when the device associated with the specified Connection Handle is in park state. The Connection_Handle must be a Connection_Handle for an ACL connection. This function does not complete immediately.

Command Parameters:

Connection_Handle: *Size: 2 Octets (12 Bits meaningful)*

Value	Parameter Description
0xXXXX	Connection Handle to be used to identify a connection. Range: 0x0000-0x0EFF (0x0F00 - 0x0FFF Reserved for future use)

Return Parameters:

None.

Event(s) generated (unless masked away):

A Command Status event for this command will occur when the BR/EDR Controller has received the Exit_Park_State command. The Mode Change event will occur when park state has ended for the specified Connection Handle.

Note: no Command Complete event will be sent by the BR/EDR Controller to indicate that this command has been completed. Instead, only the Mode Change event will indicate that this command has been completed.

7.2.6 QoS Setup Command

Command	OCF	Command Parameters	Return Parameters
HCI_QoS_Setup	0x0007	Connection_Handle, Flags, Service_Type, Token_Rate, Peak_Bandwidth, Latency, Delay_Variation	

Description:

The QoS_Setup command is used to specify Quality of Service parameters for a Connection Handle. The Connection_Handle must be a Connection_Handle for an ACL connection. These QoS parameter are the same parameters as L2CAP QoS. For more detail see "Logical Link Control and Adaptation Protocol Specification" on page 19[vol. 3]. This allows the Link Manager to have all of the information about what the Host is requesting for each connection. The LM will determine if the QoS parameters can be met. BR/EDR Controllers that are both slaves and masters can use this command. When a device is a slave, this command will trigger an LMP request to the master to provide the slave with the specified QoS as determined by the LM. When a device is a master, this command is used to request a slave device to accept the specified QoS as determined by the LM of the master. The Connection_Handle command parameter is used to identify for which connection the QoS request is requested.

Command Parameters:

Connection_Handle: *Size: 2 Octets (12 Bits meaningful)*

Value	Parameter Description
0xXXXX	Connection Handle to be used to identify which connection for the QoS Setup. Range: 0x0000-0x0EFF (0x0F00 - 0x0FFF Reserved for future use)

Flags: *Size: 1 Octet*

Value	Parameter Description
0x00 – 0xFF	Reserved for Future Use.

Service_Type: *Size: 1 Octet*

Value	Parameter Description
0x00	No Traffic.
0x01	Best Effort.
0x02	Guaranteed.
0x03-0xFF	Reserved for Future Use.

Token_Rate: *Size: 4 Octets*

Value	Parameter Description
0xXXXXXXXX	Token Rate in octets per second.

Peak_Bandwidth: *Size: 4 Octets*

Value	Parameter Description
0xXXXXXXXX	Peak Bandwidth in octets per second.

Latency: *Size: 4 Octets*

Value	Parameter Description
0xXXXXXXXX	Latency in microseconds.

Delay_Variation: *Size: 4 Octets*

Value	Parameter Description
0xXXXXXXXX	Delay Variation in microseconds.

Return Parameters:

None.

Event(s) generated (unless masked away):

When the BR/EDR Controller receives the QoS_Setup command, the BR/EDR Controller sends the Command Status event to the Host. When the Link Manager has completed the LMP messages to establish the requested QoS parameters, the BR/EDR Controller will send a QoS Setup Complete event to the Host, and the event may also be generated on the remote side if there was LMP negotiation. The values of the parameters of the QoS Setup Complete event may, however, be different on the initiating and the remote side. The QoS Setup Complete event returned by the BR/EDR Controller on the local side contains the status of this command, and returned QoS parameters describing the supported QoS for the connection.

Note: No Command Complete event will be sent by the BR/EDR Controller to indicate that this command has been completed. Instead, the QoS Setup Complete event will indicate that this command has been completed.

7.2.7 Role Discovery Command

Command	OCF	Command Parameters	Return Parameters
HCI_Role_Discovery	0x0009	Connection_Handle	Status, Connection_Handle, Current_Role

Description:

The Role_Discovery command is used for a Host to determine which role the device is performing for a particular Connection Handle. The Connection_Handle must be a Connection_Handle for an ACL connection.

Command Parameters:

Connection_Handle: *Size: 2 Octets (12 Bits meaningful)*

Value	Parameter Description
0xXXXX	Connection Handle to be used to identify a connection. Range: 0x0000-0x0EFF (0x0F00 - 0x0FFF Reserved for future use)

Return Parameters:

Status: *Size: 1 Octet*

Value	Parameter Description
0x00	Role_Discovery command succeeded
0x01-0xFF	Role_Discovery command failed. See “Error Codes” on page 335 [Part D] for a list of error codes and descriptions.

Connection_Handle: *Size: 2 Octets (12 Bits meaningful)*

Value	Parameter Description
0xXXXX	Connection Handle to be used to identify which connection the Role_Discovery command was issued on. Range: 0x0000-0x0EFF (0x0F00 - 0x0FFF Reserved for future use)

Current_Role: *Size: 1 Octet*

Value	Parameter Description
0x00	Current Role is Master for this Connection Handle.
0x01	Current Role is Slave for this Connection Handle.

Event(s) generated (unless masked away):

When the Role_Discovery command has completed, a Command Complete event will be generated.

7.2.8 Switch Role Command

Command	OCF	Command Parameters	Return Parameters
HCI_Switch_Role	0x000B	BD_ADDR, Role	

Description:

The Switch_Role command is used to switch the current BR/EDR role the device is performing for a particular connection with another specified BR/EDR Controller. The BD_ADDR command parameter indicates for which connection the role switch is to be performed. The Role parameter indicates the requested new role that the local device performs.

Note: the BD_ADDR command parameter must specify a BR/EDR Controller for which a connection already exists.

Note: If there is an SCO connection between the local device and the device identified by the BD_ADDR parameter, an attempt to perform a role switch shall be rejected by the local device.

Note: If the connection between the local device and the device identified by the BD_ADDR parameter is placed in Sniff Mode, an attempt to perform a role switch will be rejected by the local device.

Command Parameters:

BD_ADDR: *Size: 6 Octets*

Value	Parameter Description
0xXXXXXXXXXXXX	BD_ADDR for the connected device with which a role switch is to be performed.

Role: *Size: 1 Octet*

Value	Parameter Description
0x00	Change own Role to Master for this BD_ADDR.
0x01	Change own Role to Slave for this BD_ADDR.

Return Parameters:

None.

Event(s) generated (unless masked away):

A Command Status event for this command will occur when the BR/EDR Controller has received the Switch_Role command. When the role switch is performed, a Role Change event will occur to indicate that the roles have been changed, and will be communicated to both Hosts.

Note: no Command Complete event will be sent by the BR/EDR Controller to indicate that this command has been completed. Instead, only the Role Change event will indicate that this command has been completed.

7.2.9 Read Link Policy Settings Command

Command	OCF	Command Parameters	Return Parameters
HCI_Read_Link_Policy_Settings	0x000C	Connection_Handle	Status, Connection_Handle, Link_Policy_Settings

Description:

This command will read the Link Policy setting for the specified Connection Handle. The Connection_Handle must be a Connection_Handle for an ACL connection. Section 6.17 on page 426.

Command Parameters:

Connection_Handle: *Size: 2 Octets (12 Bits meaningful)*

Value	Parameter Description
0xXXXX	Connection Handle to be used to identify a connection. Range: 0x0000-0x0EFF (0x0F00 - 0x0FFF Reserved for future use)

Return Parameters:

Status: *Size: 1 Octet*

Value	Parameter Description
0x00	Read_Link_Policy_Settings command succeeded.
0x01-0xFF	Read_Link_Policy_Settings command failed. See "Error Codes" on page 335 [Part D] for a list of error codes and descriptions.

Connection_Handle: *Size: 2 Octets (12 Bits meaningful)*

Value	Parameter Description
0xXXXX	Connection Handle to be used to identify a connection. Range: 0x0000-0x0EFF (0x0F00 - 0x0FFF Reserved for future use)

Link_Policy_Settings *Size: 2 Octets*

Value	Parameter Description
0x0000	Disable All LM Modes Default.
0x0001	Enable Role Switch.
0x0002	Enable Hold Mode.
0x0004	Enable Sniff Mode.
0x0008	Enable Park State.
0x00010 – 0x8000	Reserved for Future Use.

Event(s) generated (unless masked away):

When the Read_Link_Policy_Settings command has completed, a Command Complete event will be generated.

7.2.10 Write Link Policy Settings Command

Command	OCF	Command Parameters	Return Parameters
HCI_Write_Link_Policy_Settings	0x000D	Connection_Handle, Link_Policy_Settings	Status, Connection_Handle

Description:

This command will write the Link Policy setting for the specified Connection Handle. The Connection_Handle must be a Connection_Handle for an ACL connection. See Section 6.17 on page 426.

The default value is the value set by the Write Default Link Policy Settings Command.

Command Parameters:

Connection_Handle: *Size: 2 Octets (12 Bits meaningful)*

Value	Parameter Description
0xXXXX	Connection Handle to be used to identify a connection. Range: 0x0000-0x0EFF (0x0F00 - 0x0FFF Reserved for future use)

Link_Policy_Settings *Size: 2 Octets*

Value	Parameter Description
0x0000	Disable All LM Modes.

0x0001	Enable Role Switch.
0x0002	Enable Hold Mode.
0x0004	Enable Sniff Mode.
0x0008	Enable Park State.
0x0010 – 0x8000	Reserved for Future Use.

Return Parameters:

Status: *Size: 1 Octet*

Value	Parameter Description
0x00	Write_Link_Policy_Settings command succeeded.
0x01-0xFF	Write_Link_Policy_Settings command failed. See "Error Codes" on page 335 [Part D] for error codes and descriptions.

Connection_Handle: *Size: 2 Octets (12 Bits meaningful)*

Value	Parameter Description
0xXXXX	Connection Handle to be used to identify a connection. Range: 0x0000-0x0EFF (0x0F00 - 0x0FFF Reserved for future use)

Event(s) generated (unless masked away):

When the Write_Link_Policy_Settings command has completed, a Command Complete event will be generated.

7.2.11 Read Default Link Policy Settings Command

Command	OCF	Command Parameters	Return Parameters
HCI_Read_Default_Link_Policy_Settings	0x000E		Status, Default_Link_Policy_Settings

Description:

This command will read the Default Link Policy setting for all new BR/EDR connections.

Note: Please refer to the Link Policy Settings configuration parameter for more information. See Section 6.17 on page 426.

Command Parameters:

None

Return Parameters:

Status: *Size: 1 Octet*

Value	Parameter Description
0x00	Read_Link_Policy_Settings command succeeded
0x01-0xFF	Read_Link_Policy_Settings command failed. See "Error Codes" on page 335 [Part D] for a list of error codes and descriptions.

Default_Link_Policy_Settings *Size: 2 Octets*

Value	Parameter Description
0x0000	Disable All LM Modes Default
0x0001	Enable Role Switch
0x0002	Enable Hold Mode
0x0004	Enable Sniff Mode
0x0008	Enable Park State
0x0010 – 0x8000	Reserved for Future Use.

Event(s) generated (unless masked away):

When the Read_Default_Link_Policy_Settings command has completed, a Command Complete event will be generated.

7.2.12 Write Default Link Policy Settings Command

Command	OCF	Command Parameters	Return Parameters
HCI_Write_Default_Link_Policy_Settings	0x000F	Default_Link_Policy_Settings	Status

Description:

This command will write the Default Link Policy configuration value. The Default_Link_Policy_Settings parameter determines the initial value of the Link_Policy_Settings for all new BR/EDR connections.

Note: Please refer to the Link Policy Settings configuration parameter for more information. See Section 6.17 on page 426.

Command Parameters:

Default_Link_Policy_Settings *Size: 2 Octets*

Value	Parameter Description
0x0000	Disable All LM Modes Default
0x0001	Enable Role Switch
0x0002	Enable Hold Mode
0x0004	Enable Sniff Mode
0x0008	Enable Park State
0x0010 – 0x8000	Reserved for Future Use.

Return Parameters:

Status: *Size: 1 Octet*

Value	Parameter Description
0x00	Write_Link_Policy_Settings command succeeded
0x01-0xFF	Write_Link_Policy_Settings command failed. See "Error Codes" on page 335 [Part D] for a list of error codes and descriptions.

Event(s) generated (unless masked away):

When the Write_Default_Link_Policy_Settings command has completed, a Command Complete event will be generated.

7.2.13 Flow Specification Command

Command	OCF	Command Parameters	Return Parameters
HCI_Flow_Specification	0x0010	Connection_Handle, Flags, Flow_direction, Service_Type, Token_Rate, Token_Bucket_Size, Peak_Bandwidth, Access Latency	

Description:

The Flow_Specification command is used to specify the flow parameters for the traffic carried over the ACL connection identified by the Connection_Handle. The Connection_Handle must be a Connection_Handle for an ACL connection. The Connection_Handle command parameter is used to identify for which connection the Flow Specification is requested. The flow parameters refer to the outgoing or incoming traffic of the ACL link, as indicated by the Flow_direction field. The Flow Specification command allows the Link Manager to have the parameters of the outgoing as well as the incoming flow for the ACL connection. The flow parameters are defined in the L2CAP specification “Quality of Service (QoS) Option” on page 75[vol. 3]. The Link Manager will determine if the flow parameters can be supported. BR/EDR Controllers that are both master and slave can use this command.

Command Parameters:

Connection_Handle: *Size: 2 Octets (12 Bits meaningful)*

Value	Parameter Description
0xXXXX	Connection Handle used to identify for which ACL connection the Flow is specified. Range: 0x0000 - 0x0EFF (0x0F00 – 0x0FFF Reserved for future use)

Flags: *Size: 1 Octet*

Value	Parameter Description
0x00 – 0xFF	Reserved for Future Use.

Flow_direction: *Size: 1 Octet*

Value	Parameter Description
0x00	Outgoing Flow i.e. traffic send over the ACL connection
0x01	Incoming Flow i.e. traffic received over the ACL connection
0x02 – 0xFF	Reserved for Future Use.

Service_Type: *Size: 1 Octet*

Value	Parameter Description
0x00	No Traffic
0x01	Best Effort
0x02	Guaranteed
0x03 – 0xFF	Reserved for Future Use

Token Rate: *Size: 4 Octets*

Value	Parameter Description
0xXXXXXXXX	Token Rate in octets per second

Token Bucket Size: *Size: 4 Octets*

Value	Parameter Description
0xXXXXXXXX	Token Bucket Size in octets

Peak_Bandwidth: *Size: 4 Octets*

Value	Parameter Description
0xXXXXXXXX	Peak Bandwidth in octets per second

Access Latency: *Size: 4 Octets*

Value	Parameter Description
0xXXXXXXXX	Latency in microseconds

Return Parameters:

None.

Event(s) generated (unless masked away):

When the Controller receives the Flow Specification command, the BR/EDR Controller sends the Command Status event to the Host. When the Link Manager has determined if the Flow specification can be supported, the BR/EDR Controller on the local BR/EDR Controller sends a Flow Specification Complete event to the Host. The Flow Specification Complete event returned by the Controller on the local side contains the status of this command, and returned Flow parameters describing the supported QoS for the ACL connection.

Note: No Command Complete event will be sent by the BR/EDR Controller to indicate that this command has been completed. Instead, the Flow Specification Complete event will indicate that this command has been completed.

7.2.14 Sniff Subrating Command

Command	OCF	Command Parameters	Return Parameters
HCI_Sniff_ Subrating	0x0011	Connection Handle, Maximum_Latency, Minimum_Remote_Timeout, Minimum_Local_Timeout	Status, Connection_Handle

Description:

The Sniff_Subrating command shall specify the parameters for sniff subrating for a given link. The interval shall be determined from the sniff interval and the maximum subrate latency parameters from the command. The link may have smaller subrates and therefore lower latencies and longer timeouts than those specified. When the sniff subrate has been exchanged a Sniff Subrating event shall be generated. If this command is used on a link in sniff mode this shall cause sniff subrating to be negotiated at the Link Manager, otherwise sniff subrating shall be negotiated only after the device has entered the sniff mode.

The Connection Handle shall be the primary Connection Handle between the two devices.

The Maximum Latency parameter shall define the maximum allowed sniff subrate of the remote device.

Note: If the Host does not write the sniff subrating parameters prior to sniff subrating being initiated by the Link Manager the default values shall be used.

Note: Setting both subrate values to zero is equivalent to sniff mode without subrating enabled.

Command Parameters:

Connection_Handle: *Size: 2 Octets (12 bits meaningful)*

Value	Parameter Description
0xXXXX	Connection Handle to be used to identify a connection. Range: 0x0000 – 0x0EFF (0x0F00 – 0x0FFF Reserved for future use)

Maximum_Latency: *Size: 2 Octets*

Value	Parameter Description
N = 0xXXXX	The Maximum Latency parameter shall be used to calculate the maximum_sniff subrate that the remote device may use. Default: 0x0000 Latency = N * 0.625 msec (1 Baseband slot) Range for N: 0x0000 – 0xFFFE Time Range: 0 sec – 40.9 sec

Minimum_Remote_Timeout: *Size: 2 Octets*

Value	Parameter Description
N = 0xXXXX	Minimum base sniff subrate timeout that the remote device may use Default: 0x0000 Latency = N * 0.625 msec (1 Baseband slot) Range for N: 0x0000 – 0xFFFE Time Range: 0 sec - 40.9 sec

Minimum_Local_Timeout: *Size: 2 Octets*

Value	Parameter Description
N = 0xXXXX	Minimum base sniff subrate timeout that the local device may use. Default: 0x0000 Latency = N * 0.625 msec (1 Baseband slot) Range for N: 0x0000 – 0xFFFE Time Range: 0 sec - 40.9 sec

Return Parameters:

Status: *Size: 1 Octet*

Value	Parameter Description
0x00	The Sniff Subrating command succeeded.
0x01 - 0xFF	Sniff Subrating command failed. See “Error Codes” on page 335 [Part D] for a list of error codes and descriptions.

Connection_Handle: *Size: 2 Octets (12 bits meaningful)*

Value	Parameter Description
0xXXXX	Connection Handle to be used to identify a connection. Range: 0x0000 - 0x0EFF (0x0F00 - 0x0FFF Reserved for future use)

Event(s) generated (unless masked away)

The controller sends the Command Complete event for this command to the Host when it has received the Sniff_Subrating command.

Furthermore, an _Sniff_Subrating_event shall occur when the sniff subrating has been negotiated for the specified Connection Handle.

7.3 CONTROLLER & BASEBAND COMMANDS

The Controller & Baseband Commands provide access and control to various capabilities of the Bluetooth hardware. These parameters provide control of BR/EDR Controllers and of the capabilities of the , Link Manager and Baseband

in the BR/EDR Controller and the PAL in an AMP Controller. The host device can use these commands to modify the behavior of the local Controller.

For the HCI Control and Baseband Commands, the OGF is defined as 0x03.

7.3.1 Set Event Mask Command

Command	OCF	Command Parameters	Return Parameters
HCI_Set_Event_Mask	0x0001	Event_Mask	Status

Description:

The Set_Event_Mask command is used to control which events are generated by the HCI for the Host. If the bit in the Event_Mask is set to a one, then the event associated with that bit will be enabled. The Host has to deal with each event that occurs by the BR/EDR Controllers. The event mask allows the Host to control how much it is interrupted.

Command Parameters:

Event_Mask: *Size: 8 Octets*

Value	Parameter Description
0x0000000000000000	No events specified
0x0000000000000001	Inquiry Complete Event
0x0000000000000002	Inquiry Result Event
0x0000000000000004	Connection Complete Event
0x0000000000000008	Connection Request Event
0x0000000000000010	Disconnection Complete Event
0x0000000000000020	Authentication Complete Event
0x0000000000000040	Remote Name Request Complete Event
0x0000000000000080	Encryption Change Event
0x0000000000000100	Change Connection Link Key Complete Event
0x0000000000000200	Master Link Key Complete Event
0x0000000000000400	Read Remote Supported Features Complete Event
0x0000000000000800	Read Remote Version Information Complete Event
0x0000000000001000	QoS Setup Complete Event
0x0000000000002000	Reserved
0x0000000000004000	Reserved
0x0000000000008000	Hardware Error Event

Value	Parameter Description
0x0000000000010000	Flush Occurred Event
0x0000000000020000	Role Change Event
0x0000000000040000	Reserved
0x0000000000080000	Mode Change Event
0x0000000000100000	Return Link Keys Event
0x0000000000200000	PIN Code Request Event
0x0000000000400000	Link Key Request Event
0x0000000000800000	Link Key Notification Event
0x0000000001000000	Loopback Command Event
0x0000000002000000	Data Buffer Overflow Event
0x0000000004000000	Max Slots Change Event
0x0000000008000000	Read Clock Offset Complete Event
0x0000000010000000	Connection Packet Type Changed Event
0x0000000020000000	QoS Violation Event
0x0000000040000000	Page Scan Mode Change Event [deprecated]
0x0000000080000000	Page Scan Repetition Mode Change Event
0x0000000100000000	Flow Specification Complete Event
0x0000000200000000	Inquiry Result with RSSI Event
0x0000000400000000	Read Remote Extended Features Complete Event
0x0000000800000000	Reserved
0x0000001000000000	Reserved
0x0000002000000000	Reserved
0x0000004000000000	Reserved
0x0000008000000000	Reserved
0x0000010000000000	Reserved
0x0000020000000000	Reserved
0x0000040000000000	Reserved
0x0000080000000000	Synchronous Connection Complete Event
0x0000100000000000	Synchronous Connection Changed Event
0x0000200000000000	Sniff Subrating Event
0x0000400000000000	Extended Inquiry Result Event
0x0000800000000000	Encryption Key Refresh Complete Event

Value	Parameter Description
0x0001000000000000	IO Capability Request Event
0x0002000000000000	IO Capability Request Reply Event
0x0004000000000000	User Confirmation Request Event
0x0008000000000000	User Passkey Request Event
0x0010000000000000	Remote OOB Data Request Event
0x0020000000000000	Simple Pairing Complete Event
0x0040000000000000	Reserved
0x0080000000000000	Link Supervision Timeout Changed Event
0x0100000000000000	Enhanced Flush Complete Event
0x0200000000000000	Reserved
0x0400000000000000	User Passkey Notification Event
0x0800000000000000	Keypress Notification Event
0x1000000000000000	Remote Host Supported Features Notification Event
0xE000000000000000	Reserved for future use
0x00 00 1F FF FF FF FF FF	**Default**

Return Parameters:

Status: *Size: 1 Octet*

Value	Parameter Description
0x00	Set_Event_Mask command succeeded.
0x01-0xFF	Set_Event_Mask command failed. See “Error Codes” on page 335 [Part D] for error codes and descriptions.

Event(s) generated (unless masked away):

When the Set_Event_Mask command has completed, a Command Complete event will be generated.

7.3.2 Reset Command

Command	OCF	Command Parameters	Return Parameters
HCI_Reset	0x0003		Status

Description:

The Reset command will reset the Controller and the Link Manager on the BR/EDR Controller or the PAL on an AMP Controller. The reset command shall not affect the used HCI transport layer since the HCI transport layers may have reset mechanisms of their own. After the reset is completed, the current operational state will be lost, the Controller will enter standby mode and the Controller will automatically revert to the default values for the parameters for which default values are defined in the specification.

Note: The Reset HCI command will not necessarily perform a hardware reset. This is implementation defined. On an AMP Controller, the HCI Reset command shall reset the service provided at the logical HCI to its initial state , but beyond this the exact effect on the Controller device is implementation defined and should not interrupt the service provided to other protocol stacks.

Note: The Host is not allowed to send additional HCI commands before the Command Complete event related to the Reset command has been received.

Command Parameters:

None.

Return Parameters:

Status: *Size: 1 Octet*

Value	Parameter Description
0x00	Reset command succeeded, was received and will be executed.
0x01-0xFF	Reset command failed. See “Error Codes” on page 335 [Part D] for a list of error codes and descriptions.

Event(s) generated (unless masked away):

When the reset has been performed, a Command Complete event will be generated.

7.3.3 Set Event Filter Command

Command	OCF	Command Parameters	Return Parameters
HCI_Set_Event_Filter	0x0005	Filter_Type, Filter_Condition_Type, Condition	Status

Description:

The Set_Event_Filter command is used by the Host to specify different event filters. The Host may issue this command multiple times to request various conditions for the same type of event filter and for different types of event filters. The event filters are used by the Host to specify items of interest, which allow the BR/EDR Controller to send only events which interest the Host. Only some of the events have event filters. By default (before this command has been issued after power-on or Reset) no filters are set, and the Auto_Accept_Flag is off (incoming connections are not automatically accepted). An event filter is added each time this command is sent from the Host and the Filter_Condition_Type is not equal to 0x00. (The old event filters will not be overwritten). To clear all event filters, the Filter_Type = 0x00 is used. The Auto_Accept_Flag will then be set to off. To clear event filters for only a certain Filter_Type, the Filter_Condition_Type = 0x00 is used.

The Inquiry Result filter allows the BR/EDR Controller to filter out Inquiry Result events. The Inquiry Result filter allows the Host to specify that the BR/EDR Controller only sends Inquiry Results to the Host if the Inquiry Result event meets one of the specified conditions set by the Host. For the Inquiry Result filter, the Host can specify one or more of the following Filter Condition Types:

1. Return responses from all devices during the Inquiry process
2. A device with a specific Class of Device responded to the Inquiry process
3. A device with a specific BD_ADDR responded to the Inquiry process

The Inquiry Result filter is used in conjunction with the Inquiry and Periodic Inquiry command.

The Connection Setup filter allows the Host to specify that the Controller only sends a Connection Complete or Connection Request event to the Host if the event meets one of the specified conditions set by the Host. For the Connection Setup filter, the Host can specify one or more of the following Filter Condition Types:

1. Allow Connections from all devices
2. Allow Connections from a device with a specific Class of Device
3. Allow Connections from a device with a specific BD_ADDR

For each of these conditions, an Auto_Accept_Flag parameter allows the Host to specify what action should be done when the condition is met. The Auto_Accept_Flag allows the Host to specify if the incoming connection should be auto accepted (in which case the BR/EDR Controller will send the Connection Complete event to the Host when the connection is completed) or if the Host should make the decision (in which case the BR/EDR Controller will send the Connection Request event to the Host, to elicit a decision on the connection).

The Connection Setup filter is used in conjunction with the Read/Write_Scan_Enable commands. If the local device is in the process of a page scan, and is paged by another device which meets one on the conditions set by the Host, and the Auto_Accept_Flag is off for this device, then a Connection Request event will be sent to the Host by the BR/EDR Controller. A Connection Complete event will be sent later on after the Host has responded to the incoming connection attempt. In this same example, if the Auto_Accept_Flag is on, then a Connection Complete event will be sent to the Host by the Controller. (No Connection Request event will be sent in that case.)

The BR/EDR Controller will store these filters in volatile memory until the Host clears the event filters using the Set_Event_Filter command or until the Reset command is issued. The number of event filters the BR/EDR Controller can store is implementation dependent. If the Host tries to set more filters than the BR/EDR Controller can store, the BR/EDR Controller will return the *Memory Full* error code and the filter will not be installed.

Note: the Clear All Filters has no Filter Condition Types or Conditions.

Note: In the condition that a connection is auto accepted, a Link Key Request event and possibly also a PIN Code Request event and a Link Key Notification event could be sent to the Host by the Controller before the Connection Complete event is sent.

If there is a contradiction between event filters, the latest set event filter will override older ones. An example is an incoming connection attempt where more than one Connection Setup filter matches the incoming connection attempt, but the Auto-Accept_Flag has different values in the different filters.

Command Parameters:

Filter_Type: *Size: 1 Octet*

Value	Parameter Description
0x00	Clear All Filters (Note: In this case, the Filter_Condition_type and Condition parameters should not be given, they should have a length of 0 octets. Filter_Type should be the only parameter.)
0x01	Inquiry Result.
0x02	Connection Setup.
0x03-0xFF	Reserved for Future Use.

Filter Condition Types: For each Filter Type one or more Filter Condition types exists.

Inquiry_Result_Filter_Condition_Type: *Size: 1 Octet*

Value	Parameter Description
0x00	Return responses from all devices during the Inquiry process. (Note: A device may be reported to the Host in an Inquiry Result event more than once during an inquiry or inquiry period depending on the implementation, see description in Section 7.1.1 on page 439 and Section 7.1.3 on page 441)
0x01	A device with a specific Class of Device responded to the Inquiry process.
0x02	A device with a specific BD_ADDR responded to the Inquiry process.
0x03-0xFF	Reserved for Future Use

Connection_Setup_Filter_Condition_Type: *Size: 1 Octet*

Value	Parameter Description
0x00	Allow Connections from all devices.
0x01	Allow Connections from a device with a specific Class of Device.
0x02	Allow Connections from a device with a specific BD_ADDR.
0x03-0xFF	Reserved for Future Use.

Condition: For each Filter Condition Type defined for the Inquiry Result Filter and the Connection Setup Filter, zero or more Condition parameters are required – depending on the filter condition type and filter type.

Condition for Inquiry_Result_Filter_Condition_Type = 0x00

Condition: *Size: 0 Octet*

Value	Parameter Description
	The Condition parameter is not used.

Condition for Inquiry_Result_Filter_Condition_Type = 0x01

Condition:

Size: 6 Octets

Class_of_Device: *Size: 3 Octets*

Value	Parameter Description
0x000000	Default, Return All Devices.
0xXXXXXX	*Class of Device* of Interest.

Class_of_Device_Mask: *Size: 3 Octets*

Value	Parameter Description
0xXXXXXX	Bit Mask used to determine which bits of the Class of Device parameter are 'don't care'. Zero-value bits in the mask indicate the 'don't care' bits of the Class of Device.

Condition for Inquiry_Result_Filter_Condition_Type = 0x02

Condition:

Size: 6 Octets

BD_ADDR: *Size: 6 Octets*

Value	Parameter Description
0xXXXXXXXXXXXX	BD_ADDR of the Device of Interest

Condition for Connection_Setup_Filter_Condition_Type = 0x00

Condition:

Size: 1 Octet

Auto_Accept_Flag: *Size:1 Octet*

Value	Parameter Description
0x01	Do NOT Auto accept the connection. (Auto accept is off)
0x02	Do Auto accept the connection with role switch disabled. (Auto accept is on).
0x03	Do Auto accept the connection with role switch enabled. (Auto accept is on). Note: When auto accepting an incoming synchronous connection, no role switch will be performed. The value 0x03 of the Auto_Accept_Flag will then get the same effect as if the value had been 0x02.
0x04 – 0xFF	Reserved for future use.

Condition for Connection_Setup_Filter_Condition_Type = 0x01

Condition:

Size: 7 Octets

Class_of_Device: *Size: 3 Octets*

Value	Parameter Description
0x000000	Default, Return All Devices.

0xXXXXXX	*Class of Device* of Interest.

Class_of_Device_Mask: *Size: 3 Octets*

Value	Parameter Description
0xXXXXXX	Bit Mask used to determine which bits of the Class of Device parameter are 'don't care'. Zero-value bits in the mask indicate the 'don't care' bits of the Class of Device. Note: For an incoming SCO connection, if the class of device is unknown then the connection will be accepted.

Auto_Accept_Flag: *Size: 1 Octet*

Value	Parameter Description
0x01	Do NOT Auto accept the connection. (Auto accept is off)
0x02	Do Auto accept the connection with role switch disabled. (Auto accept is on).
0x03	Do Auto accept the connection with role switch enabled. (Auto accept is on). Note: When auto accepting an incoming synchronous connection, no role switch will be performed. The value 0x03 of the Auto_Accept_Flag will then get the same effect as if the value had been 0x02.
0x04 – 0xFF	Reserved for future use.

Condition for Connection_Setup_Filter_Condition_Type = 0x02

Condition:

Size: 7 Octets

BD_ADDR: *Size: 6 Octets*

Value	Parameter Description
0xXXXXXXXXXXXX	BD_ADDR of the Device of Interest.

Auto_Accept_Flag: *Size: 1 Octet*

Value	Parameter Description
0x01	Do NOT Auto accept the connection. (Auto accept is off)
0x02	Do Auto accept the connection with role switch disabled. (Auto accept is on).
0x03	Do Auto accept the connection with role switch enabled. (Auto accept is on). Note: When auto accepting an incoming synchronous connection, no role switch will be performed. The value 0x03 of the Auto_Accept_Flag will then get the same effect as if the value had been 0x02.

0x04 – 0xFF	Reserved for future use.

Return Parameters:

Status: *Size: 1 Octet*

Value	Parameter Description
0x00	Set_Event_Filter command succeeded.
0x01-0xFF	Set_Event_Filter command failed. See "Error Codes" on page 335 [Part D] for a list of error codes and descriptions.

Event(s) generated (unless masked away):

A Command Complete event for this command will occur when the BR/EDR Controller has enabled the filtering of events. When one of the conditions are met, a specific event will occur.

7.3.4 Flush Command

Command	OCF	Command Parameters	Return Parameters
HCI_Flush	0x0008	Connection_Handle	Status, Connection_Handle

Description:

The Flush command is used to discard all data that is currently pending for transmission in the Controller for the specified Connection Handle, even if there currently are chunks of data that belong to more than one L2CAP packet in the Controller. Both automatically-flushable and non-automatically-flushable packets shall be discarded (see Section 5.4.2 on page 414). After this, all data that is sent to the Controller for the same Connection Handle will be discarded by the Controller until an HCI Data Packet with one of the start Packet_Boundary_Flag values (0x00 or 0x02) is received. When this happens, a new transmission attempt can be made. This command will allow higher-level software to control how long the baseband should try to retransmit a baseband packet for a Connection Handle before all data that is currently pending for transmission in the Controller should be flushed. Note that the Flush command is used for ACL connections ONLY. In addition to the Flush command, the automatic flush timers (see Section 7.3.29 on page 563) can be used to automatically flush an automatically-flushable L2CAP packet that is currently being transmitted after the specified flush timer has expired.

Command Parameters:

Connection_Handle: *Size: 2 Octets (12 Bits meaningful)*

Value	Parameter Description
0xXXXX	Connection Handle to be used to identify which connection to flush. Range: 0x0000-0x0EFF (0x0F00 - 0x0FFF Reserved for future use)

Return Parameters:

Status: *Size: 1 Octet*

Value	Parameter Description
0x00	Flush command succeeded.
0x01-0xFF	Flush command failed. See "Error Codes" on page 335 [Part D] for a list of error codes and descriptions.

Connection_Handle: *Size: 2 Octets (12 Bits meaningful)*

Value	Parameter Description
0xXXXX	Connection Handle to be used to identify which connection the flush command was issued on. Range: 0x0000-0x0EFF (0x0F00 - 0x0FFF Reserved for future use)

Event(s) generated (unless masked away):

The Flush Occurred event will occur once the flush is completed. A Flush Occurred event could be from an automatic Flush or could be caused by the Host issuing the Flush command. When the Flush command has completed, a Command Complete event will be generated, to indicate that the Host caused the Flush.

7.3.5 Read PIN Type Command

Command	OCF	Command Parameters	Return Parameters
HCI_Read_PIN_Type	0x0009		Status, PIN_Type

Description:

The Read PIN Type command is used to read the PIN_Type configuration parameter. See Section 6.13 on page 424.

Command Parameters:

None.

Return Parameters:

Status: *Size: 1 Octet*

Value	Parameter Description
0x00	Read_PIN_Type command succeeded.
0x01-0xFF	Read_PIN_Type command failed. See "Error Codes" on page 335 [Part D] for a list of error codes and descriptions.

PIN_Type: *Size: 1 Octet*

Value	Parameter Description
0x00	Variable PIN.
0x01	Fixed PIN.

Event(s) generated (unless masked away):

When the Read_PIN_Type command has completed, a Command Complete event will be generated.

7.3.6 Write PIN Type Command

Command	OCF	Command Parameters	Return Parameters
HCI_Write_PIN_Type	0x000A	PIN_Type	Status

Description:

The Write_PIN_Type command is used to write the PIN Type configuration parameter. See Section 6.13 on page 424.

Command Parameters:

PIN_Type: *Size: 1 Octet*

Value	Parameter Description
0x00	Variable PIN.
0x01	Fixed PIN.

Return Parameters:

Status: *Size: 1 Octet*

Value	Parameter Description
0x00	Write PIN Type command succeeded.
0x01-0xFF	Write PIN Type command failed. See "Error Codes" on page 335 [Part D] for a list of error codes and descriptions.

Event(s) generated (unless masked away):

When the Write_PIN_Type command has completed, a Command Complete event will be generated.

7.3.7 Create New Unit Key Command

Command	OCF	Command Parameters	Return Parameters
HCI_Create_New_Unit_Key	0x000B		Status

Description:

The Create_New_Unit_Key command is used to create a new unit key. The Bluetooth hardware will generate a random seed that will be used to generate the new unit key. All new connection will use the new unit key, but the old unit key will still be used for all current connections.

Note: this command will not have any effect for a device which doesn't use unit keys (i.e. a device which uses only combination keys).

Command Parameters:

None.

Return Parameters:

Status: *Size: 1 Octet*

Value	Parameter Description
0x00	Create New Unit Key command succeeded.
0x01-0xFF	Create New Unit Key command failed. See "Error Codes" on page 335 [Part D] for a list of error codes and descriptions.

Event(s) generated (unless masked away):

When the Create_New_Unit_Key command has completed, a Command Complete event will be generated.

7.3.8 Read Stored Link Key Command

Command	OCF	Command Parameters	Return Parameters
HCI_Read_Stored_ Link_Key	0x000D	BD_ADDR, Read_All_Flag	Status, Max_Num_Keys, Num_Keys_Read

Description:

The Read_Stored_Link_Key command provides the ability to read whether one or more link keys are stored in the BR/EDR Controller. The BR/EDR Controller can store a limited number of link keys for other BR/EDR Controllers. Link keys are shared between two BR/EDR Controllers, and are used for all security transactions between the two devices. The read link key command shall not return the link keys value. A Host device may have additional storage capabilities, which can be used to save additional link keys to be reloaded to the BR/EDR Controller when needed. The Read_All_Flag parameter is used to indicate if all of the stored Link Keys should be returned. If Read_All_Flag indicates that all Link Keys are to be returned, then the BD_ADDR command parameter must be ignored. The BD_ADDR command parameter is used to identify which link key to read. The stored Link Keys are returned by one or more Return Link Keys events. See Section 6.14 on page 424.

Command Parameters:

BD_ADDR: *Size: 6 Octets*

Value	Parameter Description
0xXXXXXXXXXXXX	BD_ADDR for the stored link key to be read.

Read_All_Flag: *Size: 1 Octet*

Value	Parameter Description
0x00	Return Link Key for specified BD_ADDR.
0x01	Return all stored Link Keys.
0x02-0xFF	Reserved for future use.

Return Parameters:

Status: *Size: 1 Octet*

Value	Parameter Description
0x00	Read_Stored_Link_Key command succeeded.
0x01-0xFF	Read_Stored_Link_Key command failed. See "Error Codes" on page 335 [Part D] for error codes and descriptions.

Max_Num_Keys: *Size: 2 Octets*

Value	Parameter Description
0xXXXX	Total Number of Link Keys that the Controller can store. Range: 0x0000 – 0xFFFF

Num_Keys_Read: *Size: 2 Octets*

Value	Parameter Description
0xXXXX	Number of Link Keys Read. Range: 0x0000 – 0xFFFF

Event(s) generated (unless masked away):

Zero or more instances of the Return Link Keys event will occur after the command is issued. When there are no link keys stored, no Return Link Keys events will be returned. When there are link keys stored, the number of link keys returned in each Return Link Keys event is implementation specific. When the Read Stored Link Key command has completed a Command Complete event will be generated.

7.3.9 Write Stored Link Key Command

Command	OCF	Command Parameters	Return Parameters
HCI_Write_Stored_Link_Key	0x0011	Num_Keys_To_Write, BD_ADDR[i], Link_Key[i]	Status, Num_Keys_Written

Description:

The Write_Stored_Link_Key command provides the ability to write one or more link keys to be stored in the BR/EDR Controller. The BR/EDR Controller can store a limited number of link keys for other BR/EDR Controllers. If no additional space is available in the BR/EDR Controller then no additional link keys will be stored. If space is limited and if all the link keys to be stored will not fit in the limited space, then the order of the list of link keys without any error will determine which link keys are stored. Link keys at the beginning of the list will be stored first. The Num_Keys_Written parameter will return the number of link keys that were successfully stored. If no additional space is available, then the Host must delete one or more stored link keys before any additional link keys are stored. The link key replacement algorithm is implemented by the Host and not the BR/EDR Controller. Link keys are shared between two BR/EDR Controllers and are used for all security transactions between the two devices. A Host device may have additional storage capabilities, which can be used to save additional link keys to be reloaded to the BR/EDR Controller when needed. See Section 6.14 on page 424.

Note: Link Keys are only stored by issuing this command.

Command Parameters:

Num_Keys_To_Write: *Size: 1 Octet*

Value	Parameter Description
0xXX	Number of Link Keys to Write. Range: 0x01 - 0x0B

BD_ADDR [i]: *Size: 6 Octets * Num_Keys_To_Write*

Value	Parameter Description
0xXXXXXXXXXXXX	BD_ADDR for the associated Link Key.

Link_Key[i]: *Size: 16 Octets* Num_Keys_To_Write*

Value	Parameter Description
0xXXXXXXXXXX XXXXXXXXXX XXXXXXXXXX	Link Key for an associated BD_ADDR.

Return Parameters:

Status: *Size: 1 Octet*

Value	Parameter Description
0x00	Write_Stored_Link_Key command succeeded.
0x01-0xFF	Write_Stored_Link_Key command failed. See "Error Codes" on page 335 [Part D] for a list of error codes and descriptions.

Num_Keys_Written: *Size: 1 Octet*

Value	Parameter Description
0xXX	Number of Link Keys successfully written. Range: 0x00 – 0x0B

Event(s) generated (unless masked away):

When the Write_Stored_Link_Key command has completed, a Command Complete event will be generated.

7.3.10 Delete Stored Link Key Command

Command	OCF	Command Parameters	Return Parameters
HCI_Delete_Stored_ Link_Key	0x0012	BD_ADDR, Delete_All_Flag	Status, Num_Keys_Deleted

Description:

The Delete_Stored_Link_Key command provides the ability to remove one or more of the link keys stored in the BR/EDR Controller. The BR/EDR Controller can store a limited number of link keys for other BR/EDR devices. Link keys are shared between two BR/EDR devices and are used for all security transactions between the two devices. The Delete_All_Flag parameter is used to indicate if all of the stored Link Keys should be deleted. If the Delete_All_Flag indicates that all Link Keys are to be deleted, then the BD_ADDR command parameter must be ignored This command provides the ability to negate all security agreements between two devices. The BD_ADDR command parameter is used to identify which link key to delete. If a link key is currently in use for a connection, then the link key will be deleted when all of the connections are disconnected. See Section 6.14 on page 424.

Command Parameters:

BD_ADDR: *Size: 6 Octets*

Value	Parameter Description
0xXXXXXXXXXXXX	BD_ADDR for the link key to be deleted.

Delete_All_Flag: *Size: 1 Octet*

Value	Parameter Description
0x00	Delete only the Link Key for specified BD_ADDR.
0x01	Delete all stored Link Keys.
0x02-0xFF	Reserved for future use.

Return Parameters:

Status: *Size: 1 Octet*

Value	Parameter Description
0x00	Delete_Stored_Link_Key command succeeded.
0x01-0xFF	Delete_Stored_Link_Key command failed. See “Error Codes” on page 335 [Part D] for error codes and descriptions.

Num_Keys_Deleted: *Size: 2 Octets*

Value	Parameter Description
0xXXXX	Number of Link Keys Deleted

Event(s) generated (unless masked away):

When the Delete_Stored_Link_Key command has completed, a Command Complete event will be generated.

7.3.11 Write Local Name Command

Command	OCF	Command Parameters	Return Parameters
HCI_Write_Local_Name	0x0013	Local Name	Status

Description:

The Write_Local_Name command provides the ability to modify the user-friendly name for the BR/EDR Controller. See Section 6.22 on page 429.

Command Parameters:

Local Name: *Size: 248 Octets*

Value	Parameter Description
	A UTF-8 encoded User-Friendly Descriptive Name for the device. If the name contained in the parameter is shorter than 248 octets, the end of the name is indicated by a NULL octet (0x00), and the following octets (to fill up 248 octets, which is the length of the parameter) do not have valid values.
	Null terminated Zero length String. **Default.**

Return Parameters:

Status: *Size: 1 Octet*

Value	Parameter Description
0x00	Write_Local_Name command succeeded.
0x01-0xFF	Write_Local_Name command failed. See "Error Codes" on page 335 [Part D] for a list of error codes and descriptions.

Event(s) generated (unless masked away):

When the Write_Local_Name command has completed, a Command Complete event will be generated.

7.3.12 Read Local Name Command

Command	OCF	Command Parameters	Return Parameters
HCI_Read_Local_Name	0x0014		Status, Local_Name

Description:

The Read_Local_Name command provides the ability to read the stored user-friendly name for the BR/EDR Controller. See Section 6.22 on page 429.

Command Parameters:

None.

Return Parameters:

Status: *Size: 1 Octet*

Value	Parameter Description
0x00	Read_Local_Name command succeeded
0x01-0xFF	Read_Local_Name command failed (see "Error Codes" on page 335 [Part D] for list of Error Codes).

Local_Name: *Size: 248 Octets*

Value	Parameter Description
	A UTF-8 encoded User Friendly Descriptive Name for the device. If the name contained in the parameter is shorter than 248 octets, the end of the name is indicated by a NULL octet (0x00), and the following octets (to fill up 248 octets, which is the length of the parameter) do not have valid values.

Event(s) generated (unless masked away):

When the Read_Local_Name command has completed a Command Complete event will be generated.

7.3.13 Read Connection Accept Timeout Command

Command	OCF	Command Parameters	Return Parameters
HCI_Read_Connection_Accept_Timeout	0x0015		Status, Conn_Accept_Timeout

Description:

This command will read the value for the Connection_Accept_Timeout configuration parameter. See Section 6.7 on page 421.

Command Parameters:

None.

Return Parameters:

Status: *Size: 1 Octet*

Value	Parameter Description
0x00	Read_Connection_Accept_Timeout command succeeded.
0x01-0xFF	Read_Connection_Accept_Timeout command failed. See "Error Codes" on page 335 [Part D] for a list of error codes and descriptions.

Conn_Accept_Timeout: *Size: 2 Octets*

Value	Parameter Description
N = 0xXXXX	Connection Accept Timeout measured in Number of BR/EDR Baseband slots. Interval Length = N * 0.625 msec (1 Baseband slot) Range for N: 0x0001 – 0xB540 Time Range: 0.625 msec -29 seconds

Event(s) generated (unless masked away):

When the Read_Connection_Timeout command has completed, a Command Complete event will be generated.

7.3.14 Write Connection Accept Timeout Command

Command	OCF	Command Parameters	Return Parameters
HCI_Write_Connection_Accept_Timeout	0x0016	Conn_Accept_Timeout	Status

Description:

This command will write the value for the Connection_Accept_Timeout configuration parameter. See Section 6.7 on page 421.

Command Parameters:

Conn_Accept_Timeout: *Size: 2 Octets*

Value	Parameter Description
N = 0xXXXX	Connection Accept Timeout measured in Number of BR/EDR Baseband slots. Interval Length = N * 0.625 msec (1 Baseband slot) Range for N: 0x0001 – 0xB540 Time Range: 0.625 msec - 29 seconds Default: N = 0x1FA0 Time = 5.06 Sec Mandatory Range for Controller: 0x00A0 to 0xB540

Return Parameters:

Status: *Size: 1 Octet*

Value	Parameter Description
0x00	Write_Connection_Accept_Timeout command succeeded.
0x01-0xFF	Write_Connection_Accept_Timeout command failed. See "Error Codes" on page 335 [Part D] for a list of error codes and descriptions.

Event(s) generated (unless masked away):

When the Write_Connection_Accept_Timeout command has completed, a Command Complete event will be generated.

7.3.15 Read Page Timeout Command

Command	OCF	Command Parameters	Return Parameters
HCI_Read_Page_Timeout	0x0017		Status, Page_Timeout

Description:

This command will read the value for the Page_Timeout configuration parameter. See Section 6.6 on page 421.

Command Parameters:

None.

Return Parameters:

Status: *Size: 1 Octet*

Value	Parameter Description
0x00	Read_Page_Timeout command succeeded.
0x01-0xFF	Read_Page_Timeout command failed. See "Error Codes" on page 335 [Part D] for a list of error codes and descriptions.

Page_Timeout: *Size: 2 Octets*

Value	Parameter Description
N = 0xXXXX	Page Timeout measured in Number of Baseband slots. Interval Length = N * 0.625 msec (1 Baseband slot) Range for N: 0x0001 – 0xFFFF Time Range: 0.625 msec -40.9 Seconds

Event(s) generated (unless masked away):

When the Read_Page_Timeout command has completed, a Command Complete event will be generated.

7.3.16 Write Page Timeout Command

Command	OCF	Command Parameters	Return Parameters
HCI_Write_Page_Timeout	0x0018	Page_Timeout	Status

Description:

This command will write the value for the Page_Timeout configuration parameter. The Page_Timeout configuration parameter defines the maximum time the local Link Manager will wait for a baseband page response from the remote device at a locally initiated connection attempt. If this time expires and the remote device has not responded to the page at baseband level, the connection attempt will be considered to have failed.

Command Parameters:

Page_Timeout: *Size: 2 Octets*

Value	Parameter Description
0	Illegal Page Timeout. Must be larger than 0.
N = 0xXXXX	Page Timeout measured in Number of Baseband slots. Interval Length = N * 0.625 msec (1 Baseband slot) Range for N: 0x0001 – 0xFFFF Time Range: 0.625 msec -40.9 Seconds **Default: N = 0x2000 Time = 5.12 Sec** Mandatory Range for Controller: 0x0016 to 0xFFFF

Return Parameters:

Status: *Size: 1 Octet*

Value	Parameter Description
0x00	Write_Page_Timeout command succeeded.
0x01-0xFF	Write_Page_Timeout command failed. See “Error Codes” on page 335 [Part D] for a list of error codes and descriptions.

Event(s) generated (unless masked away):

When the Write_Page_Timeout command has completed, a Command Complete event will be generated.

7.3.17 Read Scan Enable Command

Command	OCF	Command Parameters	Return Parameters
HCI_Read_Scan_Enable	0x0019		Status, Scan_Enable

Description:

This command will read the value for the Scan_Enable parameter configuration parameter. See Section 6.1 on page 419.

Command Parameters:

None.

Return Parameters:

Status: *Size: 1 Octet*

Value	Parameter Description
0x00	Read_Scan_Enable command succeeded.
0x01-0xFF	Read_Scan_Enable command failed. See "Error Codes" on page 335 [Part D] for a list of error codes and descriptions.

Scan_Enable: *Size: 1 Octet*

Value	Parameter Description
0x00	No Scans enabled.
0x01	Inquiry Scan enabled. Page Scan disabled.
0x02	Inquiry Scan disabled. Page Scan enabled.
0x03	Inquiry Scan enabled. Page Scan enabled.
0x04-0xFF	Reserved

Event(s) generated (unless masked away):

When the Read_Scan_Enable command has completed, a Command Complete event will be generated.

7.3.18 Write Scan Enable Command

Command	OCF	Command Parameters	Return Parameters
HCI_Write_Scan_Enable	0x001A	Scan_Enable	Status

Description:

This command will write the value for the Scan_Enable configuration parameter. See Section 6.1 on page 419.

Command Parameters:

Scan_Enable: *Size: 1 Octet*

Value	Parameter Description
0x00	No Scans enabled. **Default.**
0x01	Inquiry Scan enabled. Page Scan disabled.
0x02	Inquiry Scan disabled. Page Scan enabled.
0x03	Inquiry Scan enabled. Page Scan enabled.
0x04-0xFF	Reserved

Return Parameters:

Status: *Size: 1 Octet*

Value	Parameter Description
0x00	Write_Scan_Enable command succeeded.
0x01-0xFF	Write_Scan_Enable command failed. See "Error Codes" on page 335 [Part D] for a list of error codes and descriptions.

Event(s) generated (unless masked away):

When the Write_Scan_Enable command has completed, a Command Complete event will be generated.

7.3.19 Read Page Scan Activity Command

Command	OCF	Command Parameters	Return Parameters
HCI_Read_Page_Scan_Activity	0x001B		Status, Page_Scan_Interval, Page_Scan_Window

Description:

This command will read the value for Page_Scan_Interval and Page_Scan_Window configuration parameters. See Section 6.8 on page 422 and Section 6.9 on page 422.

Note: Page Scan is only performed when Page_Scan is enabled (see 6.1, 7.3.17 and 7.3.18).

A changed Page_Scan_Interval could change the local Page_Scan_Repetition_Mode (see "Baseband Specification" on page 57 [Part B]).

Command Parameters:

None.

Return Parameters:

Status: *Size: 1 Octet*

Value	Parameter Description
0x00	Read_Page_Scan_Activity command succeeded.
0x01-0xFF	Read_Page_Scan_Activity command failed. See "Error Codes" on page 335 [Part D] for a list of error codes and descriptions.

Page_Scan_Interval: *Size: 2 Octets*

Value	Parameter Description
N = 0xXXXX	Size: 2 Octets Range: 0x0012 – 0x1000 Time = N * 0.625 msec Range: 11.25 msec - 2560 msec; only even values are valid

Page_Scan_Window: *Size: 2 Octets*

Value	Parameter Description
N = 0xXXXX	Size: 2 Octets Range: 0x0011 - 0x1000 Time = N * 0.625 msec Range: 10.625 msec - 2560 msec

Event(s) generated (unless masked away):

When the Read_Page_Scan_Activity command has completed, a Command Complete event will be generated.

7.3.20 Write Page Scan Activity Command

Command	OCF	Command Parameters	Return Parameters
HCI_Write_Page_Scan_Activity	0x001C	Page_Scan_Interval, Page_Scan_Window	Status

Description:

This command will write the values for the Page_Scan_Interval and Page_Scan_Window configuration parameters. The Page_Scan_Window shall be less than or equal to the Page_Scan_Interval. See Section 6.8 on page 422 and Section 6.9 on page 422.

Note: Page Scan is only performed when Page_Scan is enabled (see 6.1, 7.3.17 and 7.3.18). A changed Page_Scan_Interval could change the local Page_Scan_Repetition_Mode (see Baseband Specification, Section 8.3.1, on page 149).

Command Parameters:

Page_Scan_Interval: *Size: 2 Octets*

Value	Parameter Description
See Section 6.8 on page 422	

Page_Scan_Window: *Size: 2 Octets*

Value	Parameter Description
See Section 6.9 on page 422	

Return Parameters:

Status: *Size: 1 Octet*

Value	Parameter Description
0x00	Write_Page_Scan_Activity command succeeded.
0x01-0xFF	Write_Page_Scan_Activity command failed. See "Error Codes" on page 335 [Part D] for a list of error codes and descriptions.

Event(s) generated (unless masked away):

When the Write_Page_Scan_Activity command has completed, a Command Complete event will be generated.

7.3.21 Read Inquiry Scan Activity Command

Command	OCF	Command Parameters	Return Parameters
HCI_Read_ Inquiry_Scan_Activity	0x001D		Status, Inquiry_Scan_Interval, Inquiry_Scan_Window

Description:

This command will read the value for Inquiry_Scan_Interval and Inquiry_Scan_Window configuration parameter. See Section 6.2 on page 419 and Section 6.3 on page 420.

Note: Inquiry Scan is only performed when Inquiry_Scan is enabled see 6.1, 7.3.17 and 7.3.18).

Command Parameters:

None.

Return Parameters:

Status: *Size: 1 Octet*

Value	Parameter Description
0x00	Read_Inquiry_Scan_Activity command succeeded.
0x01-0xFF	Read_Inquiry_Scan_Activity command failed. See "Error Codes" on page 335 [Part D] for a list of error codes and descriptions.

Inquiry_Scan_Interval: *Size: 2 Octets*

Value	Parameter Description
N = 0xXXXX	Size: 2 Octets Range: 0x0012 – 0x1000 Time = N * 0.625 msec Range: 11.25 - 2560 msec; only even values are valid

Inquiry_Scan_Window: *Size: 2 Octets*

Value	Parameter Description
N = 0xXXXX	Size: 2 Octets Range: 0x0011 - 0x1000 Time = N * 0.625 msec Range: 10.625 msec - 2560 msec

Event(s) generated (unless masked away):

When the Read_Inquiry_Scan_Activity command has completed, a Command Complete event will be generated.

7.3.22 Write Inquiry Scan Activity Command

Command	OCF	Command Parameters	Return Parameters
HCI_Write_Inquiry_Scan_Activity	0x001E	Inquiry_Scan_Interval, Inquiry_Scan_Window	Status

Description:

This command will write the values for the Inquiry_Scan_Interval and Inquiry_Scan_Window configuration parameters. The Inquiry_Scan_Window shall be less than or equal to the Inquiry_Scan_Interval. See Section 6.2 on page 419 and Section 6.3 on page 420.

Note: Inquiry Scan is only performed when Inquiry_Scan is enabled (see 6.1, 7.3.17 and 7.3.18).

Command Parameters:

Inquiry_Scan_Interval: *Size: 2 Octets*

Value	Parameter Description
See Section 6.2 on page 419.	

Inquiry_Scan_Window: *Size: 2 Octets*

Value	Parameter Description
See Section 6.3 on page 420.	

Return Parameters:

Status: *Size: 1 Octet*

Value	Parameter Description
0x00	Write_Inquiry_Scan_Activity command succeeded.
0x01-0xFF	Write_Inquiry_Scan_Activity command failed. See "Error Codes" on page 335 [Part D] for a list of error codes and descriptions.

Event(s) generated (unless masked away):

When the Write_Inquiry_Scan_Activity command has completed, a Command Complete event will be generated.

7.3.23 Read Authentication Enable Command

Command	OCF	Command Parameters	Return Parameters
HCI_Read_ Authentication_Enable	0x001F		Status, Authentication_Enable

Description:

This command will read the value for the Authentication_Enable configuration parameter. See Section 10.10.1 on page 733.

Command Parameters:

None.

Return Parameters:

Status: *Size: 1 Octet*

Value	Parameter Description
0x00	Read_Authentication_Enable command succeeded.
0x01-0xFF	Read_Authentication_Enable command failed. See "Error Codes" on page 335 [Part D] for a list of error codes and descriptions.

Authentication_Enable: *Size: 1 Octet*

Value	Parameter Description
0x00	Authentication not required.
0x01	Authentication required for all connections.
0x02-0xFF	Reserved

Event(s) generated (unless masked away):

When the Read_Authentication_Enable command has completed, a Command Complete event will be generated.

7.3.24 Write Authentication Enable Command

Command	OCF	Command Parameters	Return Parameters
HCI_Write_ Authentication_Enable	0x0020	Authentication_Enable	Status

Description:

This command will write the value for the Authentication_Enable configuration parameter. See Authentication Enable on page 733.

The Authentication_Enable configuration parameter shall only apply to connections (e.g. send an LMP_in_rand or LMP_au_rand) when the remote device's Host or BR/EDR Controller does not support Secure Simple Pairing or when the local Host does not support Secure Simple Pairing.

Note: Requires LM to read host features during connection setup.

Command Parameters:

Authentication_Enable: *Size: 1 Octet*

Value	Parameter Description
0x00	Authentication not required. **Default.**
0x01	Authentication required for all connections.
0x02-0xFF	Reserved

Return Parameters:

Status: *Size: 1 Octet*

Value	Parameter Description
0x00	Write Authentication_Enable command succeeded.
0x01-0xFF	Write Authentication_Enable command failed. See "Error Codes" on page 335 [Part D] for a list of error codes and descriptions.

Event(s) generated (unless masked away):

When the Write_Authentication_Enable command has completed, a Command Complete event will be generated.

7.3.25 Read Class of Device Command

Command	OCF	Command Parameters	Return Parameters
HCI_Read_Class_of_Device	0x0023		Status, Class_of_Device

Description:

This command will read the value for the Class_of_Device parameter. See Section 6.25 on page 430.

Command Parameters:

None.

Return Parameters:

Status: *Size: 1 Octet*

Value	Parameter Description
0x00	Read_Class_of_Device command succeeded.
0x01-0xFF	Read_Class_of_Device command failed. See "Error Codes" on page 335 [Part D] for a list of error codes and descriptions.

Class_of_Device: *Size: 3 Octets*

Value	Parameter Description
0xXXXXXX	Class of Device for the device.

Event(s) generated (unless masked away):

When the Read_Class_of_Device command has completed, a Command Complete event will be generated.

7.3.26 Write Class of Device Command

Command	OCF	Command Parameters	Return Parameters
HCI_Write_Class_of_Device	0x0024	Class_of_Device	Status

Description:

This command will write the value for the Class_of_Device parameter. See Section 6.25 on page 430.

Command Parameters:

Class_of_Device: *Size: 3 Octets*

Value	Parameter Description
0xXXXXXX	Class of Device for the device.

Return Parameters:

Status: *Size: 1 Octet*

Value	Parameter Description
0x00	Write_Class_of_Device command succeeded.
0x01-0xFF	Write_Class_of_Device command failed. See "Error Codes" on page 335 [Part D] for a list of error codes and descriptions.

Event(s) generated (unless masked away):

When the Write_Class_of_Device command has completed, a Command Complete event will be generated.

7.3.27 Read Voice Setting Command

Command	OCF	Command Parameters	Return Parameters
HCI_Read_Voice_Setting	0x0025		Status, Voice_Setting

Description:

This command will read the values for the Voice_Setting configuration parameter. See Section 6.12 on page 423.

Command Parameters:

None.

Return Parameters:

Status: *Size: 1 Octet*

Value	Parameter Description
0x00	Read_Voice_Setting command succeeded.
0x01-0xFF	Read_Voice_Setting command failed. See "Error Codes" on page 335 [Part D] for a list of error codes and descriptions.

Voice_Setting: *Size: 2 Octets (10 Bits meaningful)*

Value	Parameter Description
See Section 6.12 on page 423.	

Event(s) generated (unless masked away):

When the Read_Voice_Setting command has completed, a Command Complete event will be generated.

7.3.28 Write Voice Setting Command

Command	OCF	Command Parameters	Return Parameters
HCI_Write_Voice_Setting	0x0026	Voice_Setting	Status

Description:

This command will write the values for the Voice_Setting configuration parameter. See Section 6.12 on page 423.

Command Parameters:

Voice_Setting: *Size: 2 Octets (10 Bits meaningful)*

Value	Parameter Description
See Section 6.12 on page 423.	

Return Parameters:

Status: *Size: 1 Octet*

Value	Parameter Description
0x00	Write_Voice_Setting command succeeded.
0x01-0xFF	Write_Voice_Setting command failed. See "Error Codes" on page 335 [Part D] for a list of error codes and descriptions.

Event(s) generated (unless masked away):

When the Write_Voice_Setting command has completed, a Command Complete event will be generated.

7.3.29 Read Automatic Flush Timeout Command

Command	OCF	Command Parameters	Return Parameters
HCI_Read_Automatic_Flush_Timeout	0x0027	Connection_Handle	Status, Connection_Handle, Flush_Timeout

Description:

This command will read the value for the Flush_Timeout parameter for the specified Connection Handle. See Section 6.18 on page 427.

Command Parameters:

Connection_Handle: *Size: 2 Octets (12 Bits meaningful)*

Value	Parameter Description
0xXXXX	Specifies which Connection Handle's Flush Timeout to read. Range: 0x0000-0x0EFF (0x0F00 - 0x0FFF Reserved for future use)

Return Parameters:

Status: *Size: 1 Octet*

Value	Parameter Description
0x00	Read_Automatic_Flush_Timeout command succeeded.
0x01-0xFF	Read_Automatic_Flush_Timeout command failed. See "Error Codes" on page 335 [Part D] for a list of error codes and descriptions.

Connection_Handle: *Size: 2 Octets (12 Bits meaningful)*

Value	Parameter Description
0xXXXX	Specifies which Connection Handle's Flush Timeout has been read. Range: 0x0000-0x0EFF (0x0F00 - 0x0FFF Reserved for future use)

Flush_Timeout: *Size: 2 Octets*

Value	Parameter Description
0	Timeout = ∞; No Automatic Flush
N = 0xXXXX	Flush Timeout = N * 0.625 msec Size: 11 bits Range: 0x0001 – 0x07FF

Event(s) generated (unless masked away):

When the Read_Automatic_Flush_Timeout command has completed, a Command Complete event will be generated.

7.3.30 Write Automatic Flush Timeout Command

Command	OCF	Command Parameters	Return Parameters
HCI_Write_Automatic_Flush_Timeout	0x0028	Connection_Handle, Flush_Timeout	Status, Connection_Handle

Description:

This command will write the value for the Flush_Timeout parameter for the specified Connection Handle. See Section 6.18 on page 427.

Command Parameters:

Connection_Handle: *Size: 2 Octets (12 Bits meaningful)*

Value	Parameter Description
0xXXXX	Specifies which Connection Handle's Flush Timeout to write to. Range: 0x0000-0x0EFF (0x0F00 - 0x0FFF Reserved for future use)

Flush_Timeout: *Size: 2 Octets*

Value	Parameter Description
0	Timeout = ∞; No Automatic Flush. **Default.**
N = 0xXXXX	Flush Timeout = N * 0.625 msec Size: 11 bits Range: 0x0001 – 0x07FF Mandatory Range for Controller: 0x0002 to 0x07FF

Return Parameters:

Status: *Size: 1 Octet*

Value	Parameter Description
0x00	Write_Automatic_Flush_Timeout command succeeded.
0x01-0xFF	Write_Automatic_Flush_Timeout command failed. See "Error Codes" on page 335 [Part D] for a list of error codes and descriptions.

Connection_Handle: *Size: 2 Octets (12 Bits meaningful)*

Value	Parameter Description
0xXXXX	Specifies which Connection Handle's Flush Timeout has been written. Range: 0x0000-0x0EFF (0x0F00 - 0x0FFF Reserved for future use)

Event(s) generated (unless masked away):

When the Write_Automatic_Flush_Timeout command has completed, a Command Complete event will be generated.

7.3.31 Read Num Broadcast Retransmissions Command

Command	OCF	Command Parameters	Return Parameters
HCI_Read_Num_Broadcast_ Retransmissions	0x0029		Status, Num_Broadcast_Retransmissions

Description:

This command will read the device's parameter value for the Number of Broadcast Retransmissions. See Section 6.19 on page 427

Command Parameters:

None.

Return Parameters:

Status: *Size: 1 Octet*

Value	Parameter Description
0x00	Read_Num_Broadcast_Retransmissions command succeeded.
0x01-0xFF	Read_Num_Broadcast_Retransmissions command failed. See "Error Codes" on page 335 [Part D] for a list of error codes and descriptions.

Num_Broadcast_Retransmissions: *Size: 1 Octet*

Value	Parameter Description
See Section 6.19 on page 427.	

Event(s) generated (unless masked away):

When the Read_Num_Broadcast_Retransmission command has completed, a Command Complete event will be generated.

7.3.32 Write Num Broadcast Retransmissions Command

Command	OCF	Command Parameters	Return Parameters
HCI_Write_Num_Broadcast_ Retransmissions	0x002A	Num_Broadcast_ Retransmissions	Status

Description:

This command will write the device's parameter value for the Number of Broadcast Retransmissions. See Section 6.19 on page 427.

Command Parameters:

Num_Broadcast_Retransmissions: *Size: 1 Octet*

Value	Parameter Description
See Section 6.19 on page 427.	

Return Parameters:

Status: *Size: 1 Octet*

Value	Parameter Description
0x00	Write_Num_Broadcast_Retransmissions command succeeded.
0x01-0xFF	Write_Num_Broadcast_Retransmissions command failed. See "Error Codes" on page 335 [Part D] for a list of error codes and descriptions.

Event(s) generated (unless masked away):

When the Write_Num_Broadcast_Retransmissions command has completed, a Command Complete event will be generated.

7.3.33 Read Hold Mode Activity Command

Command	OCF	Command Parameters	Return Parameters
HCI_Read_Hold_Mode_Activity	0x002B		Status, Hold_Mode_Activity

Description:

This command will read the value for the Hold_Mode_Activity parameter. See Section 6.16 on page 425.

Command Parameters:

None.

Return Parameters:

Status: *Size: 1 Octet*

Value	Parameter Description
0x00	Read_Hold_Mode_Activity command succeeded.
0x01-0xFF	Read_Hold_Mode_Activity command failed. See "Error Codes" on page 335 [Part D] for a list of error codes and descriptions.

Hold_Mode_Activity: *Size: 1 Octet*

Value	Parameter Description
0x00	Maintain current Power State.
0x01	Suspend Page Scan.
0x02	Suspend Inquiry Scan.
0x04	Suspend Periodic Inquiries.
0x08-0xFF	Reserved for Future Use.

Event(s) generated (unless masked away):

When the Read_Hold_Mode_Activity command has completed, a Command Complete event will be generated.

7.3.34 Write Hold Mode Activity Command

Command	OCF	Command Parameters	Return Parameters
HCI_Write_Hold_Mode_Activity	0x002C	Hold_Mode_Activity	Status

Description:

This command will write the value for the Hold_Mode_Activity parameter. See Section 6.16 on page 425.

Command Parameters:

Hold_Mode_Activity: *Size: 1 Octet*

Value	Parameter Description
0x00	Maintain current Power State. **Default.**
0x01	Suspend Page Scan.
0x02	Suspend Inquiry Scan.
0x04	Suspend Periodic Inquiries.
0x08-0xFF	Reserved for Future Use.

Return Parameters:

Status: *Size: 1 Octet*

Value	Parameter Description
0x00	Write_Hold_Mode_Activity command succeeded.
0x01-0xFF	Write_Hold_Mode_Activity command failed. See "Error Codes" on page 335 [Part D] for a list of error codes and descriptions.

Event(s) generated (unless masked away):

When the Write_Hold_Mode_Activity command has completed, a Command Complete event will be generated.

7.3.35 Read Transmit Power Level Command

Command	OCF	Command Parameters	Return Parameters
HCI_Read_Transmit_ Power_Level	0x002D	Connection_Handle, Type	Status, Connection_Handle, Transmit_Power_Level

Description:

This command will read the values for the Transmit_Power_Level parameter for the specified Connection Handle. The Connection_Handle must be a Connection_Handle for an ACL connection.

Command Parameters:

Connection_Handle: *Size: 2 Octets (12 Bits meaningful)*

Value	Parameter Description
0xXXXX	Specifies which Connection Handle's Transmit Power Level setting to read. Range: 0x0000-0x0EFF (0x0F00 - 0x0FFF Reserved for future use)

Type: *Size: 1 Octet*

Value	Parameter Description
0x00	Read Current Transmit Power Level.
0x01	Read Maximum Transmit Power Level.
0x02-0xFF	Reserved

Return Parameters:

Status: *Size: 1 Octet*

Value	Parameter Description
0x00	Read_Transmit_Power_Level command succeeded.
0x01-0xFF	Read_Transmit_Power_Level command failed. See "Error Codes" on page 335 [Part D] for a list of error codes and descriptions.

Connection_Handle: *Size: 2 Octets (12 Bits meaningful)*

Value	Parameter Description
0xXXXX	Specifies which Connection Handle's Transmit Power Level setting is returned. Range: 0x0000-0x0EFF (0x0F00 - 0x0FFF Reserved for future use)

Transmit_Power_Level: *Size: 1 Octet*

Value	Parameter Description
N = 0xXX	Size: 1 Octet (signed integer) Range: -30 ≤ N ≤ 20 Units: dBm

Event(s) generated (unless masked away):

When the Read_Transmit_Power_Level command has completed, a Command Complete event will be generated.

7.3.36 Read Synchronous Flow Control Enable Command

Command	OCF	Command Parameters	Return Parameters
HCI_Read_ Synchronous_Flow_ Control_Enable	0x002E		Status, Synchronous_Flow_ Control_Enable

Description:

The Read_Synchronous_Flow_Control_Enable command provides the ability to read the Synchronous_Flow_Control_Enable setting. See Section 6.21 on page 428.

Note: the Synchronous_Flow_Control_Enable setting can only be changed if no connections exist.

Command Parameters:

None.

Return Parameters:

Status: *Size: 1 Octet*

Value	Parameter Description
0x00	Read_Synchronous_Flow_Control_Enable command succeeded
0x01-0xFF	Read_Synchronous_Flow_Control_Enable command failed (see "Error Codes" on page 335 [Part D] for list of Error Codes).

Synchronous_Flow_Control_Enable: *Size: 1 Octet*

Value	Parameter Description
0x00	Synchronous Flow Control is disabled. No Number of Completed Packets events will be sent from the Controller for Synchronous Connection Handles.

0x01	Synchronous Flow Control is enabled. Number of Completed Packets events will be sent from the Controller for Synchronous Connection Handles.

Event(s) generated (unless masked away):

When the Read_Synchronous_Flow_Control_Enable command has completed a Command Complete event will be generated.

7.3.37 Write Synchronous Flow Control Enable Command

Command	OCF	Command Parameters	Return Parameters
HCI_Write_Synchronous_Flow_Control_Enable	0x002F	Synchronous_Flow_Control_Enable	Status

Description:

The Write_Synchronous_Flow_Control_Enable command provides the ability to write the Synchronous_Flow_Control_Enable setting. See Section 6.21 on page 428.

Note: the Synchronous_Flow_Control_Enable setting can only be changed if no connections exist.

Command Parameters:

Synchronous_Flow_Control_Enable: *Size: 1 Octet*

Value	Parameter Description
0x00	Synchronous Flow Control is disabled. No Number of Completed Packets events will be sent from the Controller for synchronous Connection Handles. **Default**
0x01	Synchronous Flow Control is enabled. Number of Completed Packets events will be sent from the Controller for synchronous Connection Handles.

Return Parameters:

Status: *Size: 1 Octet*

Value	Parameter Description
0x00	Write_Synchronous_Flow_Control_Enable command succeeded
0x01-0xFF	Write_Synchronous_Flow_Control_Enable command failed (see "Error Codes" on page 335 [Part D] for list of Error Codes.)

Event(s) generated (unless masked away):

When the Write_Synchronous_Flow_Control_Enable command has completed a Command Complete event will be generated.

7.3.38 Set Controller To Host Flow Control Command

Command	OCF	Command Parameters	Return Parameters
HCI_Set_Controller_To_ Host_Flow_Control	0x0031	Flow_Control_Enable	Status

Description:

This command is used by the Host to turn flow control on or off for data and/or voice sent in the direction from the Controller to the Host. If flow control is turned off, the Host should not send the Host_Number_Of_Completed_Packets command. That command will be ignored by the Controller if it is sent by the Host and flow control is off. If flow control is turned on for HCI ACL Data Packets and off for HCI synchronous Data Packets, Host_Number_Of_Completed_Packets commands sent by the Host should only contain Connection Handles for ACL connections. If flow control is turned off for HCI ACL Data Packets and on for HCI synchronous Data Packets, Host_Number_Of_Completed_Packets commands sent by the Host should only contain Connection Handles for synchronous connections. If flow control is turned on for HCI ACL Data Packets and HCI synchronous Data Packets, the Host will send Host_Number_Of_Completed_Packets commands both for ACL connections and synchronous connections.

The Flow_Control_Enable setting shall only be changed if no connections exist.

Command Parameters:

Flow_Control_Enable: *Size: 1 Octet*

Value	Parameter Description
0x00	Flow control **off** in direction from Controller to Host. **Default.**
0x01	Flow control **on** for HCI ACL Data Packets and **off** for HCI synchronous Data Packets in direction from Controller to Host.
0x02	Flow control **off** for HCI ACL Data Packets and **on** for HCI synchronous Data Packets in direction from Controller to Host.
0x03	Flow control **on** both for HCI ACL Data Packets and HCI synchronous Data Packets in direction from Controller to Host.
0x04-0xFF	Reserved

Return Parameters:

Status: *Size: 1 Octet*

Value	Parameter Description
0x00	Set_Controller_To_Host_Flow_Control command succeeded.
0x01-0xFF	Set_Controller_To_Host_Flow_Control command failed. See "Error Codes" on page 335 [Part D] for a list of error codes and descriptions.

Event(s) generated (unless masked away):

When the Set_Controller_To_Host_Flow_Control command has completed, a Command Complete event will be generated.

7.3.39 Host Buffer Size Command

Command	OCF	Command Parameters	Return Parameters
HCI_Host_Buffer_Size	0x0033	Host_ACL_Data_Packet_Length, Host_Synchronous_Data_Packet_Length, Host_Total_Num_ACL_Data_Packets, Host_Total_Num_Synchronous_Data_Packets	Status

Description:

The Host_Buffer_Size command is used by the Host to notify the Controller about the maximum size of the data portion of HCI ACL and synchronous Data Packets sent from the Controller to the Host. The Controller will segment the data to be transmitted from the Controller to the Host according to these sizes, so that the HCI Data Packets will contain data with up to these sizes. The Host_Buffer_Size command also notifies the Controller about the total number of HCI ACL and synchronous Data Packets that can be stored in the data buffers of the Host. If flow control from the Controller to the Host is turned off, and the Host_Buffer_Size command has not been issued by the Host, this means that the Controller will send HCI Data Packets to the Host with any lengths the Controller wants to use, and it is assumed that the data buffer sizes of the Host are unlimited. If flow control from the Controller to the Host is turned on, the Host_Buffer_Size command must after a power-on or a reset always be sent by the Host before the first Host_Number_Of_Completed_Packets command is sent.

(The Set Controller To Host Flow Control Command is used to turn flow control on or off.) The Host_ACL_Data_Packet_Length command parameter will be used to determine the size of the L2CAP segments contained in ACL Data Packets, which are transferred from the Controller to the Host. The Host_Synchronous_Data_Packet_Length command parameter is used to

determine the maximum size of HCI synchronous Data Packets. Both the Host and the Controller must support command and event packets, where the data portion (excluding header) contained in the packets is 255 octets in size.

The Host_Total_Num_ACL_Data_Packets command parameter contains the total number of HCI ACL Data Packets that can be stored in the data buffers of the Host. The Controller will determine how the buffers are to be divided between different Connection Handles. The Host_Total_Num_Synchronous_ Data_Packets command parameter gives the same information for HCI synchronous Data Packets.

Note: the Host_ACL_Data_Packet_Length and Host_Synchronous_Data_ Packet_Length command parameters do not include the length of the HCI Data Packet header.

Command Parameters:

Host_ACL_Data_Packet_Length: *Size: 2 Octets*

Value	Parameter Description
0xXXXX	Maximum length (in octets) of the data portion of each HCI ACL Data Packet that the Host is able to accept.

Host_Synchronous_Data_Packet_Length: *Size: 1 Octet*

Value	Parameter Description
0xXX	Maximum length (in octets) of the data portion of each HCI synchronous Data Packet that the Host is able to accept.

Host_Total_Num_ACL_Data_Packets: *Size: 2 Octets*

Value	Parameter Description
0xXXXX	Total number of HCI ACL Data Packets that can be stored in the data buffers of the Host.

Host_Total_Num_Synchronous_Data_Packets: *Size: 2 Octets*

Value	Parameter Description
0xXXXX	Total number of HCI synchronous Data Packets that can be stored in the data buffers of the Host.

Return Parameters:

Status: *Size: 1 Octet*

Value	Parameter Description
0x00	Host_Buffer_Size command succeeded.

0x01-0xFF	Host_Buffer_Size command failed. See "Error Codes" on page 335 [Part D] for a list of error codes and descriptions.

Event(s) generated (unless masked away):

When the Host_Buffer_Size command has completed, a Command Complete event will be generated.

7.3.40 Host Number Of Completed Packets Command

Command	OCF	Command Parameters	Return Parameters
HCI_Host_Number_Of_Completed_Packets	0x0035	Number_Of_Handles, Connection_Handle[i], Host_Num_Of_Completed_Packets [i]	

Description:

The Host_Number_Of_Completed_Packets command is used by the Host to indicate to the Controller the number of HCI Data Packets that have been completed for each Connection Handle since the previous Host_Number_Of_Completed_Packetscommand was sent to the Controller. This means that the corresponding buffer space has been freed in the Host. Based on this information, and the Host_Total_Num_ACL_Data_Packets and Host_Total_Num_Synchronous_Data_Packets command parameters of the Host_Buffer_Size command, the Controller can determine for which Connection Handles the following HCI Data Packets should be sent to the Host. The command should only be issued by the Host if flow control in the direction from the Controller to the Host is on and there is at least one connection, or if the Controller is in local loopback mode. Otherwise, the command will be ignored by the Controller. When the Host has completed one or more HCI Data Packet(s) it shall send a Host_Number_Of_Completed_Packets command to the Controller, until it finally reports that all pending HCI Data Packets have been completed. The frequency at which this command is sent is manufacturer specific.

(The Set Controller To Host Flow Control Command is used to turn flow control on or off.) If flow control from the Controller to the Host is turned on, the Host_Buffer_Size command must after a power-on or a reset always be sent by the Host before the first Host_Number_Of_Completed_Packets command is sent.

Note: The Host_Number_Of_Completed_Packets command is a special command in the sense that no event is normally generated after the command has completed. The command may be sent at any time by the Host when there is at least one connection, or if the Controller is in local loopback mode independent of other commands. The normal flow control for commands is not used for the Host_Number_Of_Completed_Packets command.

Command Parameters:

Number_Of_Handles: *Size: 1 Octet*

Value	Parameter Description
0xXX	The number of Connection Handles and Host_Num_Of_Completed_Packets parameters pairs contained in this command. Range: 0-255

*Connection_Handle[i]: Size: Number_Of_Handles*2 Octets (12 Bits meaningful)*

Value	Parameter Description
0xXXXX	Connection Handle Range: 0x0000-0x0EFF (0x0F00 - 0x0FFF Reserved for future use)

*Host_Num_Of_Completed_Packets [i]: Size: Number_Of_Handles * 2 Octets*

Value	Parameter Description
N = 0xXXXX	The number of HCI Data Packets that have been completed for the associated Connection Handle since the previous time the event was returned. Range for N: 0x0000-0xFFFF

Return Parameters:

None.

Event(s) generated (unless masked away):

Normally, no event is generated after the Host_Number_Of_Completed_Packets command has completed. However, if the Host_Number_Of_Completed_Packets command contains one or more invalid parameters, the Controller will return a Command Complete event with a failure status indicating the *Invalid HCI Command Parameters error code*. The Host may send the Host_Number_Of_Completed_Packets command at any time when there is at least one connection, or if the Controller is in local loopback mode. The normal flow control for commands is not used for this command.

7.3.41 Read Link Supervision Timeout Command

Command	OCF	Command Parameters	Return Parameters
HCI_Read_Link_Supervision_Timeout	0x0036	Handle	Status, Handle, Link_Supervision_Timeout

Description:

This command will read the value for the Link_Supervision_Timeout parameter for the Controller.

Note: the Handle used for this command must be the ACL connection to the appropriate device. See Section 6.20 on page 428.

Command Parameters:

Connection_Handle: *Size: 2 Octets (12 Bits meaningful)*

Value	Parameter Description
0xXXXX	Specifies which Connection Handle's Link Supervision Timeout value is to be read. On an AMP, a Physical Link Handle is used as the lower 8 bits of the Handle. The upper 4 bits are reserved and shall be set to 0. Range: 0x0000-0x0EFF (0x0F00 - 0x0FFF Reserved for future use)

Return Parameters:

Status: *Size: 1 Octet*

Value	Parameter Description
0x00	Read_Link_Supervision_Timeout command succeeded.
0x01-0xFF	Read_Link_Supervision_Timeout command failed. See "Error Codes" on page 335 [Part D] for a list of error codes and descriptions.

Handle: *Size: 2 Octets (12 Bits meaningful)*

Value	Parameter Description
0xXXXX	Specifies which Connection Handle's Link Supervision Timeout value was read. The Handle is a Connection Handle for a BR/EDR Controller. On an AMP a Physical Link Handle is used as the lower 8 bits of the Handle. The upper 4 bits are reserved and shall be set to 0. Range: 0x0000-0x0EFF (0x0F00 - 0x0FFF Reserved for future use)

Link_Supervision_Timeout: *Size: 2 Octets*

Value	Parameter Description
0x0000	No Link_Supervision_Timeout.
N = 0xXXXX	Measured in Number of BR/EDR Baseband slots Link_Supervision_Timeout = N * 0.625 msec (1 Baseband slot) Range for N: 0x0001 – 0xFFFF Time Range: 0.625ms - 40.9 sec

Event(s) generated (unless masked away):

When the Read_Link_Supervision_Timeout command has completed, a Command Complete event will be generated.

7.3.42 Write Link Supervision Timeout Command

Command	OCF	Command Parameters	Return Parameters
HCI_Write_Link_Supervision_Timeout	0x0037	Handle, Link_Supervision_Timeout	Status, Handle

Description:

This command will write the value for the Link_Supervision_Timeout parameter for a BR/EDR or AMP Controller. For BR/EDR Controllers, this command shall only be issued on the master for the given Connection Handle. If this command is issued on a slave, the command shall be rejected by the BR/EDR controller with the error code Command Disallowed. The command may be issued to any AMP Controller without restriction to role.

Note: the Handle used for this command must be the ACL connection to the appropriate device. This command will set the Link_Supervision_Timeout values for other Synchronous Handles to that device.
See Section 6.20 on page 428.

Command Parameters:

Handle: *Size: 2 Octets (12 Bits meaningful)*

Value	Parameter Description
0xXXXX	Specifies which Handle's Link Supervision Timeout value is to be written. The Handle is a Connection Handle for a BR/EDR Controller. On an AMP a Physical Link Handle is used as the lower 8 bits of the Handle. The upper 4 bits are reserved and shall be set to 0. Range: 0x0000-0x0EFF (0x0F00 - 0x0FFF Reserved for future use)

Link_Supervision_Timeout: *Size: 2 Octets*

Value	Parameter Description
0x0000	No Link_Supervision_Timeout.
N = 0xXXXX	Measured in Number of BR/EDR Baseband slots Link_Supervision_Timeout = N*0.625 msec (1 Baseband slot) Range for N: 0x0001 – 0xFFFF Time Range: 0.625ms – 40.9 sec **Default**: N = 0x7D00 Link_Supervision_Timeout = 20 sec Mandatory Range for Controller: 0x0190 to 0xFFFF; plus 0 for infinite timeout

Return Parameters:

Status: *Size: 1 Octet*

Value	Parameter Description
0x00	Write_Link_Supervision_Timeout command succeeded.
0x01-0xFF	Write_Link_Supervision_Timeout command failed. See "Error Codes" on page 335 [Part D] for a list of error codes and descriptions.

Handle: *Size: 2 Octets (12 Bits meaningful)*

Value	Parameter Description
0xXXXX	Specifies which Handle's Link Supervision Timeout value was written. The Handle is a Connection Handle for a BR/EDR Controller. On an AMP a Physical Link Handle is used as the lower 8 bits of the Handle. The upper 4 bits (of the 12 meaningful bits) are reserved and shall be set to 0. Range: 0x0000-0x0EFF (0x0F00 - 0x0FFF Reserved for future use)

Event(s) generated (unless masked away):

When the Write_Link_Supervision_Timeout command has completed, a Command Complete event will be generated.

7.3.43 Read Number Of Supported IAC Command

Command	OCF	Command Parameters	Return Parameters
HCI_Read_Number_Of_Supported_IAC	0x0038		Status, Num_Support_IAC

Description:

This command will read the value for the number of Inquiry Access Codes (IAC) that the local BR/EDR Controller can simultaneous listen for during an Inquiry Scan. All Bluetooth Controllers are required to support at least one IAC, the General Inquiry Access Code (the GIAC). Some Bluetooth Controllers support additional IACs.

Command Parameters:

None

Return Parameters:

Status: *Size: 1 Octet*

Value	Parameter Description
0x00	Read_Number_Of_Supported_IAC command succeeded.
0x01-0xFF	Read_Number_Of_Supported_IAC command failed. See "Error Codes" on page 335 [Part D] for a list of error codes and descriptions.

Num_Support_IAC *Size: 1 Octet*

Value	Parameter Description
0xXX	Specifies the number of Supported IAC that the local BR/EDR Controller can simultaneous listen for during an Inquiry Scan. Range: 0x01-0x40

Event(s) generated (unless masked away):

When the Read_Number_Of_Supported_IAC command has completed, a Command Complete event will be generated.

7.3.44 Read Current IAC LAP Command

Command	OCF	Command Parameters	Return Parameters
HCI_Read_Current_IAC_LAP	0x0039		Status, Num_Current_IAC, IAC_LAP[i]

Description:

This command reads the LAP(s) used to create the Inquiry Access Codes (IAC) that the local BR/EDR Controller is simultaneously scanning for during Inquiry Scans. All BR/EDR Controllers are required to support at least one IAC, the General Inquiry Access Code (the GIAC). Some BR/EDR Controllers support additional IACs.

Command Parameters:

None

Return Parameters:

Status: *Size: 1 Octet*

Value	Parameter Description
0x00	Read_Current_IAC_LAP command succeeded.
0x01-0xFF	Read_Current_IAC_LAP command failed. See "Error Codes" on page 335 [Part D] for a list of error codes and descriptions.

Num_Current_IAC *Size: 1 Octet*

Value	Parameter Description
0xXX	Specifies the number of IACs which are currently in use by the local BR/EDR Controller to simultaneously listen for during an Inquiry Scan. Range: 0x01-0x40

IAC_LAP[i] *Size: 3 Octets * Num_Current_IAC*

Value	Parameter Description
0xXXXXXX	LAPs used to create the IAC which is currently in use by the local BR/EDR Controller to simultaneously listen for during an Inquiry Scan. Range: 0x9E8B00-0x9E8B3F

Event(s) generated (unless masked away):

When the Read_Current_IAC_LAP command has completed, a Command Complete event will be generated.

7.3.45 Write Current IAC LAP Command

Command	OCF	Command Parameters	Return Parameters
HCI_Write_Current_IAC_LAP	0x003A	Num_Current_IAC, IAC_LAP[i]	Status

Description:

This command writes the LAP(s) used to create the Inquiry Access Codes (IAC) that the local BR/EDR Controller is simultaneously scanning for during Inquiry Scans. All BR/EDR Controller are required to support at least one IAC, the General Inquiry Access Code (the GIAC). Some BR/EDR Controllers support additional IACs.

This command shall clear any existing IACs and stores Num_Current_IAC and the IAC_LAPs in to the controller. If Num_Current_IAC is greater than Num_Support_IAC then only the first Num_Support_IACs shall be stored in the controller, and a Command Complete event with error code *Success (0x00)* shall be generated.

Command Parameters:

Num_Current_IAC *Size: 1 Octet*

Value	Parameter Description
0xXX	Specifies the number of IACs which are currently in use by the local BR/EDR Controller to simultaneously listen for during an Inquiry Scan. Range: 0x01-0x40

IAC_LAP[i] *Size: 3 Octets * Num_Current_IAC*

Value	Parameter Description
0xXXXXXX	LAP(s) used to create IAC which is currently in use by the local BR/EDR Controller to simultaneously listen for during an Inquiry Scan. Range: 0x9E8B00-0x9E8B3F. The GIAC is the default IAC to be used. If additional IACs are supported, additional default IAC will be determined by the manufacturer.

Return Parameters:

Status: *Size: 1 Octet*

Value	Parameter Description
0x00	Write_Current_IAC_LAP command succeeded.
0x01-0xFF	Write_Current_IAC_LAP command failed. See "Error Codes" on page 335 [Part D] for a list of error codes and descriptions.

Event(s) generated (unless masked away):

When the Write_Current_IAC_LAP command has completed, a Command Complete event will be generated.

7.3.46 Set AFH Host Channel Classification Command

Command	OCF	Command Parameters	Return Parameters
Set_AFH_Host_Channel_ Classification	0x003F	AFH_Host_Channel_ Classification	Status

Description:

The Set_AFH_Host_Channel_Classification command allows the Host to specify a channel classification based on its “local information”. This classification persists until overwritten with a subsequent HCI Set_AFH_Host_Channel_Classification command or until the BR/EDR Controller is reset.

This command shall be supported by a device that declares support for any of the AFH_capable_master, AFH_classification_slave or AFH_classification_master features.

If this command is used, then updates should be sent within 10 seconds, of the host knowing that the channel classification has changed. The interval between two successive commands sent shall be at least 1 second.

Command Parameters:

AFH_Host_Channel_Classification: *Size: 10 Octets (79 Bits meaningful)*

Value	Parameter Description
0xXXXXXXXX XXXXXXXXXX XX	This parameter contains 79 1-bit field. The nth such field (in the range 0 to 78) contains the value for channel *n*: Channel *n* is bad = 0 Channel *n* is unknown = 1 The most significant bit is reserved and shall be set to 0 At least N_{min} channels shall be marked as unknown. (See Baseband Specification, Section 2.3.1, on page 74)

Return Parameters:

Status: *Size: 1 Octet*

Value	Parameter Description
0x00	Set_AFH_Host_Channel_Classification command succeeded.

Value	Parameter Description
0x01-0xFF	Set_AFH_Host_Channel_Classification command failed. "Error Codes" on page 335 [Part D] for a list of error codes and descriptions.

Event(s) generated (unless masked away):

When the Set_AFH_Host_Channel_Classification command has completed, a Command Complete event will be generated.

7.3.47 Read Inquiry Scan Type Command

Command	OCF	Command Parameters	Return Parameters
HCI_Read_Inquiry_Scan_Type	0x0042		Status, Inquiry_Scan_Type

Description:

This command is used to read the Inquiry_Scan_Type configuration parameter of the local BR/EDR Controller. See Section 6.4 on page 420.
For details, see the Baseband Specification, "Inquiry scan substate" on page 159 [Part B].

Command Parameters:

None

Return Parameters:

Status: *Size: 1 Octet*

Value	Parameter Description
0x00	Read_Inquiry_Scan_Type command succeeded
0x01-0xFF	Read_Inquiry_Scan_Type command failed. See "Error Codes" on page 335 [Part D] for a list of error codes and descriptions.

Inquiry_Scan_Type: *Size: 1 Octet*

Value	Parameter Description
0x00	Mandatory: Standard Scan (default)
0x01	Optional: Interlaced Scan
0x02-0xFF	Reserved

Event(s) generated (unless masked away):

When the Read_Inquiry_Scan_Type command has completed, a Command Complete event will be generated.

7.3.48 Write Inquiry Scan Type Command

Command	OCF	Command Parameters	Return Parameters
HCI_Write_Inquiry_Scan_Type	0x0043	Scan_Type	Status

Description:

This command is used to write the Inquiry Scan Type configuration parameter of the local BR/EDR Controller. See Section 6.4 on page 420. For details, see the Baseband Specification, "Inquiry scan substate" on page 159 [Part B].

Command Parameters:

Scan_Type: *Size: 1 Octet*

Value	Parameter Description
0x00	Mandatory: Standard Scan (default)
0x01	Optional: Interlaced Scan
0x02-0xFF	Reserved

Return Parameters:

Status: *Size: 1 Octet*

Value	Parameter Description
0x00	Write_Inquiry_Scan_Type command succeeded
0x01-0xFF	Write_Inquiry_Scan_Type command failed. See "Error Codes" on page 335 [Part D] for a list of error codes and descriptions.

Event(s) generated (unless masked away):

When the Write_Inquiry_Scan_Type command has completed, a Command Complete event will be generated.

7.3.49 Read Inquiry Mode Command

Command	OCF	Command Parameters	Return Parameters
HCI_Read_Inquiry_Mode	0x0044		Status, Inquiry_Mode

Description:

This command is used to read the Inquiry_Mode configuration parameter of the local BR/EDR Controller. See Section 6.5 on page 420.

Return Parameters:

Status: *Size: 1 Octet*

Value	Parameter Description
0x00	Read_Inquiry_Mode command succeeded.
0x01-0xFF	Read_Inquiry_Mode command failed. See "Error Codes" on page 335 [Part D] for list of Error Codes.

Inquiry_Mode: *Size: 1 Octet*

Value	Parameter Description
0x00	Standard Inquiry Result event format
0x01	Inquiry Result format with RSSI
0x02	Inquiry Result with RSSI format or Extended Inquiry Result format
0x03-0xFF	Reserved

Event(s) generated (unless masked away):

When the Read_Inquiry_Mode command has completed, a Command Complete event will be generated.

7.3.50 Write Inquiry Mode Command

Command	OCF	Command Parameters	Return Parameters
HCI_Write_Inquiry_Mode	0x0045	Inquiry_Mode	Status

Description:

This command is used to write the Inquiry_Mode configuration parameter of the local BR/EDR Controller. See Section 6.5 on page 420.

Command Parameters:

Inquiry_Mode: *Size: 1 Octet*

Value	Parameter Description
0x00	Standard Inquiry Result event format (default)
0x01	Inquiry Result format with RSSI
[0x02	Inquiry Result with RSSI format or Extended Inquiry Result format
0x03-0xFF	Reserved

Return Parameters:

Status: *Size: 1 Octet*

Value	Parameter Description
0x00	Write_Inquiry_Mode command succeeded.
0x01-0xFF	Write_Inquiry_Mode command failed. See "Error Codes" on page 335 [Part D] for a list of error codes and descriptions.

Event(s) generated (unless masked away):

When the Write_Inquiry_Mode command has completed, a Command Complete event will be generated.

7.3.51 Read Page Scan Type Command

Command	OCF	Command Parameters	Return Parameters
HCI_Read_Page_Scan_Type	0x0046		Status, Page_Scan_Type

Description:

This command is used to read the Page Scan Type configuration parameter of the local BR/EDR Controller. See Section 6.11 on page 423. For details, see the Baseband Specification, "Page Scan Substate" on page 149 [Part B].

Return Parameters:

Status: *Size: 1 Octet*

Value	Parameter Description
0x00	Read_Page_Scan_Type command succeeded.
0x01-0xFF	Read_Page_Scan_Type command failed. See "Error Codes" on page 335 [Part D] for a list of error codes and descriptions.

Page_Scan_Type: *Size: 1 Octet*

Value	Parameter Description
0x00	Mandatory: Standard Scan (default)
0x01	Optional: Interlaced Scan
0x02-0xFF	Reserved

Event(s) generated (unless masked away):

When the Read_Page_Scan_Type command has completed, a Command Complete event will be generated.

7.3.52 Write Page Scan Type Command

Command	OCF	Command Parameters	Return Parameters
HCI_Write_Page_Scan_Type	0x0047	Page_Scan_Type	Status

Description:

This command is used to write the Page Scan Type configuration parameter of the local BR/EDR Controller. See Section 6.11 on page 423. For details, see the Baseband Specification, "Page Scan Substate" on page 149 [Part B].

Command Parameters:

Page_Scan_Type: *Size: 1 Octet*

Value	Parameter Description
0x00	Mandatory: Standard Scan (default)
0x01	Optional: Interlaced Scan
0x02-0xFF	Reserved

Return Parameters:

Status: *Size: 1 Octet*

Value	Parameter Description
0x00	Write_Page_Scan_Type command succeeded.
0x01-0xFF	Write_Page_Scan_Type command failed. See "Error Codes" on page 335 [Part D] for a list of error codes and descriptions.

Event(s) generated (unless masked away):

When the Write_Page_Scan_Type command has completed, a Command Complete event will be generated.

7.3.53 Read AFH Channel Assessment Mode Command

Command	OCF	Command Parameters	Return Parameters
Read_AFH_Channel_Assessment_Mode	0x0048		Status, AFH_Channel_Assessment_Mode

Description:

The Read_AFH_Channel_Assessment_Mode command reads the value for the AFH_Channel_Assessment_Mode parameter. The AFH_Channel_Assessment_Mode parameter controls whether the controller's channel assessment scheme is enabled or disabled.

This command shall be supported by a device that declares support for any of the AFH_capable_master, AFH_classification_slave or AFH_classification_master features.

Return Parameters:

Status: *Size: 1 Octet*

Value	Parameter Description
0x00	Read_AFH_Channel_Assessment_Mode command succeeded.
0x01-0xFF	Read_AFH_Channel_Assessment_Mode command failed. See "Error Codes" on page 335 [Part D] for a list of error codes and descriptions.

AFH_Channel_Assessment_Mode: *Size: 1 Octet*

Value	Parameter Description
0x00	Controller channel assessment disabled.
0x01	Controller channel assessment enabled.
0x02-0xFF	Reserved for future use.

Event(s) generated (unless masked away):

When the Read_AFH_Channel_Assessment_Mode command has completed, a Command Complete event will be generated.

7.3.54 Write AFH Channel Assessment Mode Command

Command	OCF	Command Parameters	Return Parameters
Write_AFH_Channel _Assessment_Mode	0x0049	AFH_Channel _Assessment_Mode	Status

Description:

The Write_AFH_Channel_Assessment_Mode command writes the value for the AFH_Channel_Assessment_Mode parameter. The AFH_Channel_Assessment_Mode parameter controls whether the Controller's channel assessment scheme is enabled or disabled.

Disabling channel assessment forces all channels to be unknown in the local classification, but does not affect the AFH_reporting_mode or support for the Set_AFH_Host_Channel_Classification command. A slave in the AFH_reporting_enabled state shall continue to send LMP channel classification messages for any changes to the channel classification caused by either this command (altering the AFH_Channel_Assessment_Mode) or HCI Set_AFH_Host_Channel_Classification command (providing a new channel classification from the Host).

This command shall be supported by a device that declares support for any of the AFH_capable_master, AFH_classification_slave or AFH_classification_master features.

If the AFH_Channel_Assessment_Mode parameter is enabled and the BR/EDR Controller does not support a channel assessment scheme, other than via the Set_AFH_Host_Channel_Classification command, then a Status parameter of 'Channel Assessment Not Supported' should be returned. See "Error Codes" on page 335 [Part D] for a list of error codes and descriptions.

If the BR/EDR Controller supports a channel assessment scheme then the default AFH_Channel_Assessment_Mode is enabled, otherwise the default is disabled.

Command Parameters:

AFH_Channel_Assessment_Mode: *Size: 1 Octet*

Value	Parameter Description
0x00	Controller channel assessment disabled.
0x01	Controller channel assessment enabled.
0x02-0xFF	Reserved for future use.

Return Parameters:

Status: *Size: 1 Octet*

Value	Parameter Description
0x00	Write_AFH_Channel_Assessment_Mode command succeeded.
0x01-0xFF	Write_AFH_Channel_Assessment_Mode command failed. See "Error Codes" on page 335 [Part D] for a list of error codes and descriptions.

Event(s) generated (unless masked away):

When the Write_AFH_Channel_Assessment_Mode command has completed, a Command Complete event will be generated.

7.3.55 Read Extended Inquiry Response Command

Command	OCF	Command Parameters	Return Parameters
HCI_Read_Extended_Inquiry_Response	0x0051		Status, FEC_Required, Extended_Inquiry_Response

Description:

The Read_Extended_Inquiry_Response command will read the extended inquiry response to be sent during the extended inquiry response procedure. The FEC_Required parameter states if FEC encoding is required.

Command Parameters:

None.

Return Parameters:

Status: *Size: 1 Octet*

Value	Parameter Description
0x00	Read_Extended_Inquiry_Response command succeeded.
0x01 - 0xFF	Read_Extended_Inquiry_Response command failed. See "Error Codes" on page 335 [Part D] for a list of error codes and descriptions.

FEC_Required: *Size: 1 Octet*

Value	Parameter Description
0x00	FEC is not required
0x01	FEC is required

Value	Parameter Description
0x02-0xFF	Reserved

Extended_Inquiry_Response: *Size: 240 Octets*

Value	Parameter Description
	Extended inquiry response data as defined in [Vol 3 Part C], Section 8.

Event(s) generated (unless masked away):

When the Read_Extended_Inquiry_Response command has completed, a Command Complete event will be generated.

7.3.56 Write Extended Inquiry Response Command

Command	OCF	Command Parameters	Return Parameters
HCI_Write_Extended_Inquiry_Response	0x0052	FEC_Required, Extended_Inquiry_Response	Status

Description:

The Write_Extended_Inquiry_Response command will write the extended inquiry response to be sent during the extended inquiry response procedure. The FEC_Required command parameter states if FEC encoding is required. The extended inquiry response data is not preserved over a reset. The initial value of the inquiry response data is all zero octets. The controller shall not interpret the extended inquiry response data.

Command Parameters:

FEC_Required: *Size: 1 Octet*

Value	Parameter Description
0x00	FEC is not required
0x01	FEC is required
0x02-0xFF	Reserved

Extended Inquiry Response: *Size: 240 Octets*

Value	Parameter Description
	Extended inquiry response data as defined in [Vol 3 Part C], Section 8.
	All octets zero. **Default**

Return Parameters:

Status: *Size: 1 Octet*

Value	Parameter Description
0x00	Write_Extended_Inquiry_Response command succeeded
0x01-0xFF	Write_Extended_Inquiry_Response command failed. See "Error Codes" on page 335 [Part D] for a list of error codes and descriptions.

Event(s) generated (unless masked away):

When the Write_Extended_Inquiry_Response command has completed, a Command Complete event will be generated.

7.3.57 Refresh Encryption Key Command

Command	OCF	Command Parameters	Return Parameters
HCI_Refresh_Encryption_Key	0x0053	Connection_Handle	Status

Description:

This command is used by the Host to cause the BR/EDR Controller to refresh the encryption key by pausing and resuming encryption.

Command Parameters:

Connection_Handle: *Size: 2 Octets (12 bits meaningful)*

Value	Parameter Description
0xXXXX	Connection Handle for the ACL connection to have the encryption key refreshed on.

Range: 0x0000-0x0EFF (0x0F00 - 0x0FFF Reserved for future use)

Return Parameters:

Status: *Size: 1 Octet*

Value	Parameter Description
0x00	Refresh_Encryption_Key command succeeded
0x01 - 0xFF	Refresh_Encryption_Key command failed. See "Error Codes" on page 335 [Part D] for a list of error codes and descriptions.

Event(s) generated (unless masked away):

A Command_Status event is sent from the BR/EDR Controller to the Host when the Controller has started the Refresh Encryption Key procedure. An

Encryption Key Refresh Complete event is generated when the Refresh Encryption Key procedure has completed.

7.3.58 Read Simple Pairing Mode Command

Command	OCF	Command Parameters	Return Parameters
HCI_Read_Simple_Pairing_mode	0x0055		Status, Simple_Pairing_Mode

Description:

This command reads the Simple Pairing mode setting in the BR/EDR Controller.

Command Parameters:

None

Return Parameters:

Status: *Size: 1 Octet*

Value	Parameter Description
0x00	Read_Simple_Pairing_Mode command succeeded.
0x01 - 0xFF	Read_Simple_Pairing_Mode command failed. See “Error Codes” on page 335 [Part D] for a list of error codes and descriptions.

Simple_Pairing_Mode *Size: 1Octet*

Value	Parameter Description
0x00	Simple Pairing not set (default)
0x01	Simple pairing enabled
0x02 - 0xFF	Reserved for future use

Event(s) generated (unless masked away):

When the Read_Simple_Pairing_Mode command has completed, a Command Complete event shall be generated.

7.3.59 Write Simple Pairing Mode Command

Command	OCF	Command Parameters	Return Parameters
HCI_Write_Simple_Pairing_mode	0x0056	Simple_Pairing_Mode	Status

Description:

This command enables Simple Pairing mode in the BR/EDR Controller. When Simple Pairing Mode is set to 'enabled' the Link Manager will respond to an LMP_io_capability_req PDU with an LMP_io_capability_res PDU and continue with the subsequent pairing procedure. When Simple Pairing mode is set to 'disabled', the Link Manager will reject an IO capability request. A Host shall not set the Simple Pairing Mode to ‘disabled.’

Until Write_Simple_Pairing_mode is received by the BR/EDR Controller, it shall not support any Simple Pairing sequences, and shall respond with the error code Simple Pairing not Supported by Host. This command shall be written before initiating page scan or paging procedures.

The Link Manager Secure Simple Pairing (Host Support) feature bit shall be set to the Simple Pairing Mode parameter. The default value for Simple_Pairing_Mode shall be 'disabled.' When Simple Pairing Mode is set to 'enabled,' the bit in the LMP features mask indicating support for Secure Simple Pairing (Host Support) shall be set to enabled in subsequent responses to an LMP_feature_req from a remote device.

Command Parameters:

Simple_Pairing_Mode: *Size: 1 Octet*

Value	Parameter Description
0x00	Simple Pairing disabled (default)
0x01	Simple pairing enabled
0x02 - 0xFF	Reserved for future use

Return Parameters:

Status: *Size: 1 Octet*

Value	Parameter Description
0x00	Write_Simple_Pairing_Mode command succeeded.
0x01 - 0xFF	Write_Simple_Pairing_Mode command failed. See “Error Codes” on page 335 [Part D] for a list of error codes and descriptions.

Event(s) generated (unless masked away):

When the Write_Simple_Pairing_Mode command has completed, a Command Complete event shall be generated.

7.3.60 Read Local OOB Data Command

Command	OCF	Command Parameters	Return Parameters
HCI_Read_Local_OOB_Data	0x0057		Status, C, R

Description:

This command is used to obtain a Simple Pairing Hash C and Simple Pairing Randomizer R which are intended to be transferred to a remote device using an OOB mechanism. The BR/EDR Controller shall create new values for C and R for each invocation of this command.

Note: Each OOB transfer will have unique C and R values so after each OOB transfer this command shall be used to obtain a new set of values for the next OOB transfer.

Note: The controller keeps information used to generate these values for later use in the simple pairing process. If the BR/EDR Controller is powered off or reset then this information is lost and the values obtained before the power off or reset are invalid.

Command Parameters:

None

Return Parameters:

Status: *Size: 1 Octet*

Value	Parameter Description
0x00	Read_Local_OOB_Data command succeeded.
0x01 - 0xFF	Read_Local_OOB_Data command failed. See “Error Codes” on page 335 [Part D] for a list of error codes and descriptions.

C: *Size: 16 Octets*

Value	Parameter Description
0xXXXXXXXXXX XXXXXXXXXXX XXXXXXXXXX	Simple Pairing Hash C

R: *Size: 16 Octets*

Value	Parameter Description
0xXXXXXXXXXX XXXXXXXXXXX XXXXXXXXXX	Simple Pairing Randomizer R

Event(s) generated (unless masked away):

When the Read_Local_OOB_Data command has completed, a Command Complete event shall be generated.

7.3.61 Read Inquiry Response Transmit Power Level Command

Command	OCF	Command Parameters	Return Parameters
HCI_Read_Inquiry _Response_Transmit _Power_Level	0x0058		Status, TX_Power

Description:

This command will read the inquiry Transmit Power level used to transmit the FHS and EIR data packets. This can be used directly in the Tx Power Level EIR data type.

Command Parameters:

None

Return Parameters:

Status: *Size: 1 Octet*

Value	Parameter Description
0x00	Read_Inquiry_Response_Transmit_Power_Level command succeeded.
0x01 - 0xFF	Read_Inquiry_Response_Transmit_Power_Level command failed. See “Error Codes” on page 335 [Part D] for a list of error codes and descriptions.

TX Power: *Size: 1 Octet*

Value	Parameter Description
0xXX	Size: 1 Octet (signed integer) Range: $-70 \leq N \leq 20$ Units: dBm

Event(s) generated (unless masked away):

When the Read_Inquiry_Response_Transmit_Power_Level command has completed, a Command Complete event shall be generated.

7.3.62 Write Inquiry Transmit Power Level Command

Command	OCF	Command Parameters	Return Parameters
HCI_Write_Inquiry_Transmit_Power_Level	0x0059	TX_Power	Status

Description:

This command is used to write the inquiry transmit power level used to transmit the inquiry (ID) data packets. The Controller should use the supported TX power level closest to the Tx_Power parameter.

Command Parameters:

None

TX Power: *Size: 1 Octet*

Value	Parameter Description
0xXX	Size: 1 Octet (signed integer) Range: $-70 \leq N \leq 20$ Units: dBm

When the Write_Inquiry_Transmit_Power_Level command has completed, a Command Complete event shall be generated.

Return Parameters:

Status: *Size: 1 Octet*

Value	Parameter Description
0x00	Write_Inquiry_Transmit_Power_Level command succeeded
0x01 - 0xFF	Write_Inquiry_Transmit_Power_Level command failed. See “Error Codes” on page 335 [Part D] for a list of error codes and descriptions.

Event(s) generated (unless masked away):

When the Write_Inquiry_Transmit_Power_Level command has completed, a Command Complete event shall be generated.

7.3.63 Send Keypress Notification Command

Command	OCF	Command Parameters	Return Parameters
HCI_Send_Keypress_Notification	0x0060	BD_ADDR, Notification_Type	Status, BD_ADDR

Description:

This command is used during the Passkey Entry protocol by a device with KeyboardOnly IO capabilities. It is used by a Host to inform the remote device when keys have been entered or erased.

Command Parameters:

(BD_ADDR: *Size: 6 Octets*

Value	Parameter Description
0xXXXXXXXXXXXX	BD_ADDR of remote device involved in simple pairing process

Notification_Type: *Size: 1 Octet*

Value	Parameter Description
0	Passkey entry started
1	Passkey digit entered
2	Passkey digit erased
3	Passkey cleared
4	Passkey entry completed
5-255	Reserved for future use

Return Parameters:

Status: *Size: 1 Octet*

Value	Parameter Description
0x00	Send_Keypress_Notification command succeeded
0x01 - 0xFF	Send_Keypress_Notification command failed

(BD_ADDR: *Size: 6 Octets*

Value	Parameter Description
0xXXXXXXXXXXXX	BD_ADDR of remote device involved in simple pairing process

Event(s) generated (unless masked away):

When the Send_Keypress_Notification command has completed, a Command Complete event shall be generated.

7.3.64 Read Default Erroneous Data Reporting

Command	OCF	Command Parameters	Return Parameters
HCI_Read_Default_ Erroneous_Data_Reporting	0x005A		Status, Erroneous_Data_Reporting

Description:

This command reads the Erroneous_Data_Reporting parameter.

Command Parameters:

None.

Return Parameters:

Status: *Size: 1 Octet*

Value	Parameter Description
0x00	Read_Default_Erroneous_Data_Reporting command succeeded.
0x01 - 0xFF	Read_Default_Erroneous_Data_Reporting command failed. See “Error Codes” on page 335 [Part D] for a list of error codes and descriptions.

Erroneous_Data_Reporting: *Size: 1 Octet*

Value	Parameter Description
0x00	Erroneous data reporting disabled.
0x01	Erroneous data reporting enabled.
0x02 - 0xFF	Reserved.

Event(s) generated (unless masked away):

When the Write_Default_Erroneous_Data_Reporting command has completed, a Command Complete event shall be generated.

7.3.65 Write Default Erroneous Data Reporting

Command	OCF	Command Parameters	Return Parameters
HCI_Write_Default_ Erroneous_Data_Reporting	0x005B	Erroneous_Data_Reporting	Status

Description:

This command writes the Erroneous_Data_Reporting parameter. The BR/EDR Controller shall set the Packet_Status_Flag as defined in Section 5.4.3, “HCI Synchronous Data Packets,” on page 416, depending on the value of this parameter. The new value for the Erroneous_Data_Reporting parameter shall not apply to existing synchronous connections.

Command Parameters:

Erroneous_Data_Reporting: *Size: 1 Octet*

Value	Parameter Description
0x00	Erroneous Data reporting disabled. **Default.**
0x01	Erroneous data reporting enabled.
0x02 - 0xFF	Reserved.

Return Parameters:

Status: *Size: 1 Octet*

Value	Parameter Description
0x00	Write_Default_Erroneous_Data_Reporting command succeeded.
0x01 - 0xFF	Write_Default_Erroneous_Data_Reporting command failed. See “Error Codes” on page 335 [Part D] for a list of error codes and descriptions.

Event(s) generated (unless masked away):

When the Write_Default_Erroneous_Data_Reporting command has completed, a Command Complete event shall be generated.

7.3.66 Enhanced Flush Command

Command	OCF	Command Parameters	Return Parameters
HCI_Enhanced_Flush	0x005F	Handle, Packet_Type	

Description:

The Enhanced_Flush command is used to discard all L2CAP packets identified by Packet_Type that are currently pending for transmission in the Controller for the specified Handle, even if there currently are chunks of data that belong to more than one L2CAP packet of the same type in the Controller. The only packet type defined is automatically-flushable. Packets not identified by Packet_Type will not be flushed and will be processed normally by the Controller.

After flushing the packets, all data that is sent to the BR/EDR Controller for the same Handle and packet type will be discarded by the Controller until an HCI Data Packet with the start Packet_Boundary_Flag (0x00 or 0x02) is received. This command will allow higher-level software to control how long the baseband should try to retransmit a baseband packet of a specific type for a Handle before all data of that type currently pending for transmission in the Controller should be flushed. Note that the Enhanced Flush command is used for ACL-U connections ONLY. On the BR/EDR Controller the Flush command can be used to flush all packets (see Section 7.3.4 on page 534). In addition to the Enhanced Flush and Flush commands, the automatic flush timers (see Section 7.3.29 on page 563) can be used to automatically flush an automatically-flushable L2CAP packet that is currently being transmitted after the specified flush timer has expired.

This command shall be supported by a device that declares support for the Non-Flushable Packet Boundary Flag feature.

On an AMP Controller, in addition to the Enhanced_Flush command, the automatic flush timer specified in the Flow Specification for this logical link may be used to automatically flush packets on this logical link.

Command Parameters:

Handle: *Size: 2 Octets (12 bits meaningful)*

Value	Parameter Description
0xXXXX	Handle to be used to identify a connection. The Handle is a Connection Handle for a BR/EDR Controller and a Logical Link Handle for an AMP Controller. Range: 0x0000 - 0x0EFF (0x0F00 - 0x0FFF Reserved for future use)

Packet_Type: *Size: 1 Octet*

Value	Parameter Description
0x00	Automatically flushable only.
0x01 - 0xFF	Reserved for future use.

Return Parameters:

None

Event(s) generated (unless masked away):

When the Controller receives the Enhanced_Flush command, the Controller shall send the Command Status event to the host. In addition, when all the packets identified by Packet_Type have been flushed for the specified Handle, the controller shall send an Enhanced Flush Complete event to the host. The controller may send the Enhanced Flush Complete event immediately after flushing all the packets of type Packet_Type for the specified Handle, or it may wait until all packets for the specified Handle, independent of Packet_Type, buffered in the controller at the time of the receipt of the Enhanced Flush Command, have been either flushed or transmitted.

Note: No Command Complete event will be sent by the Controller to indicate that this command has been completed. Instead, the Enhanced Flush Complete event will indicate that this command has been completed.

7.3.67 Read Logical Link Accept Timeout Command

Command	OCF	Command Parameters	Return Parameters
HCI_ Read_Logical_Link_Accept_Timeout	0x0061		Status, Logical_Link_Accept_Timeout

Description:

This command will read the value for the Logical_Link_Accept_Timeout configuration parameter. See Logical Link Accept Timeout.

Command Parameters:

None

Return Parameters:

Status: *Size: 1 Octet*

Value	Parameter Description
0x00	Read_Logical_Link_Accept_Timeout command succeeded.

Value	Parameter Description
0x01-0xFF	Read_Logical_Link_Accept_Timeout command failed. See "Error Codes" on page 335 [Part D] for a list of error codes and descriptions.

Logical_Link_Accept_Timeout: *Size: 2 Octets*

Value	Parameter Description
N = 0xXXXX	Logical_Link Accept Timeout measured in Number of BR/EDR Baseband slots. Interval Length = N * 0.625 msec (1 BR/EDR Baseband slot) Range for N: 0x0001 - 0xB540 Time Range: 0.625 msec -29 seconds

Event(s) generated (unless masked away):

When the Read Logical Link Timeout command has completed, a Command Complete event will be generated.

7.3.68 Write Logical Link Accept Timeout Command

Command	OCF	Command Parameters	Return Parameters
HCI_Write_ Logical_Link _Accept_Timeout	0x0062	Logical_Link_Accept_ Timeout	Status

Description:

This command will write the value for the Logical_Link_Accept_Timeout configuration parameter. See Logical Link Accept Timeout.

Command Parameters:

Logical_Link_Accept_Timeout: *Size: 2 Octets*

Value	Parameter Description
N = 0xXXXX	Logical_Link Accept Timeout measured in Number of BR/EDR Baseband slots. Interval Length = N * 0.625 msec (1 BR/EDR Baseband slot) Range for N: 0x0001 - 0xB540 Time Range: 0.625 msec - 29 seconds Default: N = 0x1FA0 Time = 5.06 Sec Mandatory Range for Controller: 0x00A0 to 0xB540

Return Parameters:

Status: *Size: 1 Octet*

Value	Parameter Description
0x00	Write_Logical_Link_Accept_Timeout command succeeded.
0x01-0xFF	Write_Logical_Link_Accept_Timeout command failed. See "Error Codes" on page 335 [Part D]or a list of error codes and descriptions.

Event(s) generated (unless masked away):

When the Write_Logical_Link _Accept_Timeout command has completed, a Command Complete event will be generated.

7.3.69 Set Event Mask Page 2 Command

Command	OCF	Command Parameters	Return Parameters
HCI_ Set_Event_Mask_Page_2	0x0063	Event_Mask_Page_2	Status

Description:

The Set_Event_Mask_Page_2 command is used to control which events are generated by the HCI for the Host. The Event_Mask_Page_2 is a logical extension to the Event_Mask parameter of the Set_Event_Mask command. If the bit in the Event_Mask_Page_2 is set to a one, then the event associated with that bit shall be enabled. The Host has to deal with each event that occurs by the Controllers. The event mask allows the Host to control how much it is interrupted.

Command Parameters:

Event_Mask_Page_2: *Size: 8 Octets*

Value	Parameter Description
0x0000000000000000	No events specified (**default**)
0x0000000000000001	Physical Link Complete Event
0x0000000000000002	Channel Selected Event
0x0000000000000004	Disconnection Physical Link Event
0x0000000000000008	Physical Link Loss Early Warning Event
0x0000000000000010	Physical Link Recovery Event
0x0000000000000020	Logical Link Complete Event
0x0000000000000040	Disconnection Logical Link Complete Event
0x0000000000000080	Flow Spec Modify Complete Event
0x0000000000000100	Number of Completed Data Blocks Event
0x0000000000000200	AMP Start Test Event

Value	Parameter Description
0x0000000000000400	AMP Test End Event
0x0000000000000800	AMP Receiver Report Event
0x0000000000001000	Short Range Mode Change Complete Event
0x0000000000002000	AMP Status Change Event
0xFFFFFFFFFFFFC000	Reserved for future use

Return Parameters:

Status: *Size: 1 Octet*

Value	Parameter Description
0x00	Set_Event_Mask_Page_2 command succeeded.
0x01-0xFF	Set_Event_Mask_Page_2 command failed. See "Error Codes" on page 335 [Part D]for error codes and descriptions.

Event(s) generated (unless masked away):

When the Set_Event_Mask_Page_2 command has completed, a Command Complete event shall be generated.

7.3.70 Read Location Data Command

Command	OCF	Command Parameters	Return Parameters
HCI_ Read_Location_Data	0x0064		Status, Location_Domain_Aware, Location_Domain, Location_Domain Options, Location_Options

Description:

The Read_Location_Data command provides the ability to read any stored knowledge of environment or regulations or currently in use in the AMP Controller. See Section 6.28 to Section 6.31 on page 437.

Command Parameters:

None.

Return Parameters:

Status: *Size: 1 Octet*

Value	Parameter Description
0x00	Read_Location_Data command succeeded.
0x01-0xFF	Read_Location_Data command failed. See " “Error Codes” on page 335 [Part D] for error codes and descriptions.

See Section 6.28 to Section 6.31 for Location_Domain_Aware, Location_Domain, Location_Domain_Options and Location_Options respectively.

Event(s) generated (unless masked away):

When the Read_Location_Data command has completed, a Command Complete event shall be generated.

7.3.71 Write Location Data Command

Command	OCF	Command Parameters	Return Parameters
HCI_ Write_Location_Data	0x0065	Location_Domain_Aware, Location_Domain, Location_Domain_Options, Location_Options	Status

Description:

The Write_Location_Data command is used to write information about the environment or regulations currently in force, which may affect the operation of the Controller. The Controller may use this information to optimize its operation and to ensure its conformance to currently applicable regulations. The exact way in which this affects AMP operation is AMP type specific.

Command Parameters:

See Section 6.28 to Section 6.31 for Location_Domain_Aware, Location_Domain, Location_Domain_Options, Location_Options.

Return Parameters:

Status: *Size: 1 Octet*

Value	Parameter Description
0x00	Write_Location_Data command succeeded.
0x01-0xFF	Write_Location_Data command failed. See “Error Codes” on page 335 [Part D] for error codes and descriptions.

Event(s) generated (unless masked away):

When the Write_Location_Data command has completed, a Command Complete event shall be generated.

7.3.72 Read Flow Control Mode Command

Command	OCF	Command Parameters	Return Parameters
HCI_ Read_Flow_Control_Mode	0x0066		Status, Flow_Control_Mode

Description:

This command will read the value for the Flow_Control_Mode configuration parameter. See Section 6.32 on page 438.

Command Parameters:

None

Return Parameters:

Status: *Size: 1 Octet*

Value	Parameter Description
0x00	Read_Flow_Control_Mode command succeeded.
0x01-0xFF	Read_Flow_Control_Scheme command failed. See "Error Codes" on page 335 [Part D] for a list of error codes and descriptions.

Event(s) generated (unless masked away):

When the Read_Flow_Control_Mode command has completed, a Command Complete event shall be generated.

7.3.73 Write Flow Control Mode Command

Command	OCF	Command Parameters	Return Parameters
HCI_Write_Flow_Control_Mode	0x0067	Flow_Control_Mode	Status

Description:

This command will write the value for the Flow_Control_Mode configuration parameter. See Section 6.32 on page 438.

Command Parameters:

Flow_Control_Mode: *Size: 1 Octet*

Value	Parameter Description
0x00	Packet based data flow control mode (**default for a BR/EDR Controller**)
0x01	Data block based data flow control mode (**default for an AMP Controller**)
0x02-0xFF	Reserved for future use

Return Parameters:

Status: *Size: 1 Octet*

Value	Parameter Description
0x00	Write_Flow_Control_Mode command succeeded.
0x01-0xFF	Write_Flow_Control_Scheme command failed. See "Error Codes" on page 335 [Part D]for a list of error codes and descriptions.

Event(s) generated (unless masked away):

When the Write_Flow_Control_Mode command has completed, a Command Complete event shall be generated. If the set fails then the Controller continues using its current mode.

7.3.74 Read Enhanced Transmit Power Level Command

Command	OCF	Command Parameters	Return Parameters
HCI_Read_Enhance_Transmit_Power_Level	0x0068	Connection Handle, Type	Status, Connection_Handle, Transmit_Power_Level_GFSK, Transmit_Power_Level_DQPSK, Transmit_Power_Level_8DPSK

Description:

This command will read the values for the Enhanced_Transmit_Power_Level parameters for the specified Connection Handle. The Connection_Handle must be a Connection_Handle for an ACL connection.

Command Parameters:

Connection_Handle: *Size: 2 Octets (12 bits meaningful)*

Type: *Size: 1 Octet*

Value	Parameter Description
0xXXXX	Connection Handle to be used to identify a connection. Range: 0x0000 - 0x0EFF (0x0F00 - 0x0FFF Reserved for future use).

Value	Parameter Description
0x00	Read Current Transmit Power Level
0x01	Read Maximum Transmit Power Level
0x01-0xFF	Reserved.

Return Parameters:

Status: *Size: 1 Octet*

Value	Parameter Description
0x00	Read_Enhanced_Transmit_Power_Level command succeeded.
0x01-0xFF	Read_Enhanced_Transmit_Power_Level command failed. See "Error Codes" on page 335 [Part D] for a list of error codes and descriptions.

Connection_Handle: *Size: 2 Octets (12 bits meaningful)*

Value	Parameter Description
0xXXXX	Connection Handle to be used to identify a connection. Range: 0x0000 - 0x0EFF (0x0F00 - 0x0FFF Reserved for future use)

Transmit_Power_Level_GFSK: *Size: 1 Octet*

Value	Parameter Description
0xXX	Size: 1 Octet (signed integer) Range: -100 ≤ N ≤ 20 Units: dBm

Transmit_Power_Level_DQPSK: *Size: 1 Octet*

Value	Parameter Description
0xXX	Size: 1 Octet (signed integer) Range: -100 ≤ N ≤ 20 Units: dBm

Transmit_Power_Level_8DPSK: *Size: 1 Octet*

Value	Parameter Description
0x00	Size: 1 Octet (signed integer) Range: -100 ≤ N ≤ 20 Units: dBm

Event(s) generated (unless masked away):

The controller sends the Command Complete event for this command to the Host when it has received the HCI_Read_Enhanced_Transmit_Power_Level command.

7.3.75 Read Best Effort Flush Timeout Command

Command	OCF	Command Parameters	Return Parameters
HCI_ Read_Best_Effort_ Flush_Timeout	0x0069	Logical_Link_Handle	Status, Best_Effort_Flush_Timeout

Description:

This command will read the value of the Best Effort Flush Timeout from the AMP Controller.

Command Parameters:

Logical_Link_Handle: *Size: 2 Octets (12 Bits meaningful)*

Value	Parameter Description
0xXXXX	Logical_Link_Handle to which the Write_Best_Effort_Flush_Timeout command applies. Range: 0x0000-0xEFF (0x0F00 - 0x0FF Reserved for future use)

Return Parameters:

Status: *Size: 1 Octet*

Value	Parameter Description
0x00	Read_Best_Effort_Flush_Timeout command succeeded.
0x01-0xFF	Read_Best_Effort_Flush_Timeout command failed. See “Error Codes” on page 335 [Part D] for a list of error codes and descriptions.

Best_Effort_Flush_Timeout: *Size: 4 Octets*

Value	Parameter Description
0xXXXXXXXX	0x00000000 - 0xFFFFFFFE: Best Effort Flush Timeout value in microseconds 0xFFFFFFFF: No Best Effort Flush Timeout used (default)

Event(s) generated (unless masked away):

When the Read_Best_Effort_Flush_Timeout command has completed, a Command Complete event shall be generated.

7.3.76 Write Best Effort Flush Timeout Command

Command	OCF	Command Parameters	Return Parameters
HCI_ Write_Best_Effort_Flush_ Timeout	0x006A	Logical_Link_Handle, Best_Effort_Flush_Timeout	Status

Description:

This command will write the value of the Best_Effort_Flush_Timeout into the AMP Controller. The Best_Effort_Flush_Timeout shall be associated with the given logical link, and that Logical Link Handle must specify a Best Effort logical link.

Command Parameters:

Logical_Link_Handle: *Size: 2 Octets (12 bits meaningful)*

Value	Parameter Description
0xXXXX	Logical Link Handle to which the Write_Best_Effort_Flush_Timeout command applies. Range: 0x0000-0xEFF (0x0F00 - 0x0FF Reserved for future use)

Best_Effort_Flush_Timeout: *Size: 4 Octets*

Value	Parameter Description
0xXXXXXXXX	0x00000000 - 0xFFFFFFFE: Best_Effort_Flush_Timeout value in microseconds 0xFFFFFFFF: No Best Effort Flush Timeout used (default)

Return Parameters:

Status: *Size: 1 Octet*

Value	Parameter Description
0x00	Write_Best_Effort_Flush_Timeout command succeeded.

Value	Parameter Description
0x01-0xFF	Write_Best_Effort_Flush_Timeout command failed. See " "Error Codes" on page 335 [Part D] for a list of error codes and descriptions.

Event(s) generated (unless masked away):

When the Write_Best_Effort_Flush_Timeout command has completed, a Command Complete event shall be generated.

7.3.77 Short Range Mode Command

Command	OCF	Command Parameters	Return Parameters
HCI_ Short_Range_Mode	0x006B	Physical_Link_Handle, Short_Range_Mode	Status

Description:

This command will configure the value of Short Range Mode into the AMP Controller and is AMP type specific (see Volume 5).

Command Parameters:

Physical_Link_Handle: *Size: 1 Octet*

Value	Parameter Description
0xXX	Physical Link Handle to which the Short Range Mode command applies.

Short_Range_Mode: *Size: 1 Octet*

Value	Parameter Description
0xXX	Configuration setting of Short Range Mode 0x00 - Short Range Mode disabled (default) 0x01 - Short Range Mode enabled 0x02 - 0xFF - Reserved

Return Parameters:

Status: *Size: 1 Octet*

Value	Parameter Description
0x00	Short Range Mode command succeeded.
0x01-0xFF	Short Range Mode command failed. See "Error Codes" on page 335 [Part D] for a list of error codes and descriptions.

Event(s) generated (unless masked away):

When the Short_Range_Mode command has completed, a Short_Range_Mode_Change_Complete event will be generated.

7.4 INFORMATIONAL PARAMETERS

The Informational Parameters are fixed by the manufacturer of the Bluetooth hardware. These parameters provide information about the BR/EDR Controller and the capabilities of the Link Manager and Baseband in the BR/EDR Controller and PAL in the AMP Controller. The host device cannot modify any of these parameters.

For Informational Parameters Commands, the OGF is defined as 0x04.

7.4.1 Read Local Version Information Command

Command	OCF	Command Parameters	Return Parameters
HCI_Read_Local_Version_ Information	0x0001		Status, HCI Version, HCI Revision, LMP Version, Manufacturer_Name, LMP Subversion

Description:

This command will read the values for the version information for the local Controller.

The HCI Version information defines the version information of the HCI layer. The LMP/PAL Version information defines the version of the LMP or PAL. The Manufacturer_Name information indicates the manufacturer of the local device.

The HCI Revision and LMP/PAL Subversion are implementation dependent.

Command Parameters:

None.

Return Parameters:

Status: *Size: 1 Octet*

Value	Parameter Description
0x00	Read_Local_Version_Information command succeeded.

0x01-0xFF	Read_Local_Version_Information command failed. See "Error Codes" on page 335 [Part D] for a list of error codes and descriptions.

HCI_Version: *Size: 1 Octet*

Value	Parameter Description
See Bluetooth Assigned Numbers	

HCI_Revision: *Size: 2 Octets*

Value	Parameter Description
0xXXXX	Revision of the Current HCI in the BR/EDR Controller.

LMP/PAL_Version: *Size: 1 Octet*

Value	Parameter Description
0xXX	Version of the Current LMP or PAL in the Controller. See Bluetooth Assigned Numbers

Manufacturer_Name: *Size: 2 Octets*

Value	Parameter Description
0xXXXX	Manufacturer Name of the BR/EDR Controller. See Bluetooth Assigned Numbers

LMP/PAL_Subversion: *Size: 2 Octets*

Value	Parameter Description
0xXXXX	Subversion of the Current LMP or PAL in the Controller. This value is implementation dependent.

Event(s) generated (unless masked away):

When the Read_Local_Version_Information command has completed, a Command Complete event will be generated.

7.4.2 Read Local Supported Commands Command

Command	OCF	Command Parameters	Return Parameters
HCI_ Read_Local_Supported_Commands	0x0002		Status, Supported Commands

Description:

This command reads the list of HCI commands supported for the local Controller.

This command will return the Supported Commands configuration parameter. It is implied that if a command is listed as supported, the feature underlying that command is also supported.

See Section 6.26 on page 430 for more information.

Command Parameters:

None.

Return Parameters:

Status: *Size: 1 Octet*

Value	Parameter Description
0	Read Local Supported Commands command succeeded
0x01-0xff	Read Local Supported Commands command failed. See "Error Codes" on page 335 [Part D] for a list of error codes and descriptions.

Supported Commands: *Size: 64 Octets*

Value	Parameter Description
	Bit mask for each HCI Command. If a bit is 1, the Controller supports the corresponding command and the features required for the command. Unsupported or undefined commands shall be set to 0. See section 6.26, "Supported Commands," on page 430.

Event(s) generated (unless masked away):

When the Read Local Supported Commands command has completed a Command Complete event will be generated.

7.4.3 Read Local Supported Features Command

Command	OCF	Command Parameters	Return Parameters
HCI_Read_Local_Supported_Features	0x0003		Status, LMP_Features

Description:

This command requests a list of the supported features for the local BR/EDR Controller. This command will return a list of the LMP features. For details see "Link Manager Protocol Specification" on page 205 [Part C].

Command Parameters:

None.

Return Parameters:

Status: *Size: 1 Octet*

Value	Parameter Description
0x00	Read_Local_Supported_Features command succeeded.
0x01-0xFF	Read_Local_Supported_Features command failed. See "Error Codes" on page 335 [Part D].

LMP_Features: *Size: 8 Octets*

Value	Parameter Description
0xXXXXXXXX XXXXXXXX	Bit Mask List of LMP features. For details see "Link Manager Protocol Specification" on page 205 [Part C].

Event(s) generated (unless masked away):

When the Read_Local_Supported_Features command has completed, a Command Complete event will be generated.

7.4.4 Read Local Extended Features Command

Command	OCF	Command Parameters	Return Parameters
HCI_Read_Local_ Extended_Features	0x0004	Page number	Status, Page number, Maximum Page Number, Extended_LMP_Features

Description:

The HCI_Read_Local_Extended_Features command returns the requested page of the extended LMP features.

Command Parameters:

Page Number: *Size: 1 Octet*

Value	Parameter Description
0x00	Requests the normal LMP features as returned by HCI_Read_Local_Supported_Features.
0x01-0xFF	Return the corresponding page of features.

Return Parameters:

Status: *Size: 1 Octet*

Value	Parameter Description
0x00	HCI_Read_Local_Extended_Features command succeeded
0x01-0xFF	HCI_Read_Local_Extended_Features command failed. See “Error Codes” on page 335 [Part D] for list of error codes.

Page Number: *Size: 1 Octet*

Value	Parameter Description
0x00	The normal LMP features as returned by HCI_Read_Local_Supported_Features.
0x01-0xFF	The page number of the features returned.

Maximum Page Number: *Size: 1 Octet*

Value	Parameter Description
0x00-0xFF	The highest features page number which contains non-zero bits for the local device.

Extended_LMP_Features: *Size: 8 Octets*

Value	Parameter Description

0xFFFFFFFFFFFFFFFF	Bit map of requested page of LMP features. See LMP specification for details.

Event(s) generated (unless masked away):

When the BR/EDR Controller receives the HCI_Read_Local_Extended_Features command the BR/EDR Controller sends the Command Complete event to the Host containing the requested information.

7.4.5 Read Buffer Size Command

Command	OCF	Command Parameters	Return Parameters
HCI_Read_Buffer_Size	0x0005		Status, HC_ACL_Data_Packet_Length, HC_Synchronous_Data_Packet_Length, HC_Total_Num_ACL_Data_Packets, HC_Total_Num_Synchronous_Data_Packets

Description:

The Read_Buffer_Size command is used to read the maximum size of the data portion of HCI ACL and synchronous Data Packets sent from the Host to the Controller. The Host will segment the data to be transmitted from the Host to the Controller according to these sizes, so that the HCI Data Packets will contain data with up to these sizes. The Read_Buffer_Size command also returns the total number of HCI ACL and synchronous Data Packets that can be stored in the data buffers of the Controller. The Read_Buffer_Size command must be issued by the Host before it sends any data to the Controller.

The HC_ACL_Data_Packet_Length return parameter will be used to determine the size of the L2CAP segments contained in ACL Data Packets, which are transferred from the Host to the Controller to be broken up into baseband packets by the Link Manager. The HC_Synchronous_Data_Packet_Length return parameter is used to determine the maximum size of HCI synchronous Data Packets. Both the Host and the Controller must support command and event packets, where the data portion (excluding header) contained in the packets is 255 octets in size. The HC_Total_Num_ACL_Data_Packets return parameter contains the total number of HCI ACL Data Packets that can be stored in the data buffers of the Controller. The Host will determine how the buffers are to be divided between different Connection Handles. The HC_Total_Num_Synchronous_Data_Packets return parameter gives the same information but for HCI synchronous Data Packets.

Note: The HC_ACL_Data_Packet_Length and HC_Synchronous_Data_Packet_Length return parameters do not include the length of the HCI Data Packet header.

Command Parameters:

None.

Return Parameters:

Status: *Size: 1 Octet*

Value	Parameter Description
0x00	Read_Buffer_Size command succeeded.
0x01-0xFF	Read_Buffer_Size command failed. See "Error Codes" on page 335 [Part D] for a list of error codes and descriptions.

HC_ACL_Data_Packet_Length: *Size: 2 Octets*

Value	Parameter Description
0xXXXX	Maximum length (in octets) of the data portion of each HCI ACL Data Packet that the Controller is able to accept.

HC_Synchronous_Data_Packet_Length: *Size: 1 Octet*

Value	Parameter Description
0xXX	Maximum length (in octets) of the data portion of each HCI Synchronous Data Packet that the Controller is able to accept.

HC_Total_Num_ACL_Data_Packets: *Size: 2 Octets*

Value	Parameter Description
0xXXXX	Total number of HCI ACL Data Packets that can be stored in the data buffers of the Controller.

HC_Total_Num_Synchronous_Data_Packets: *Size: 2 Octets*

Value	Parameter Description
0xXXXX	Total number of HCI Synchronous Data Packets that can be stored in the data buffers of the Controller.

Event(s) generated (unless masked away):

When the Read_Buffer_Size command has completed, a Command Complete event will be generated.

7.4.6 Read BD_ADDR Command

Command	OCF	Command Parameters	Return Parameters
HCI_Read_BD_ADDR	0x0009		Status, BD_ADDR

Description:

This command shall read the BR/EDR Controller address (BD_ADDR). See the “Baseband Specification” on page 57 [Part B] for details of how BD_ADDR is used.

Command Parameters:

None.

Return Parameters:

Status: *Size: 1 Octet*

Value	Parameter Description
0x00	Read_BD_ADDR command succeeded.
0x01-0xFF	Read_BD_ADDR command failed. See “Error Codes” on page 335 [Part D] for a list of error codes and descriptions.

BD_ADDR: *Size: 6 Octets*

Value	Parameter Description
0xXXXXXXXXXXXX	BD_ADDR of the Device

Event(s) generated (unless masked away):

When the Read_BD_ADDR command has completed, a Command Complete event will be generated.

7.4.7 Read Data Block Size Command

Command	OCF	Command Parameters	Return Parameters
HCI_ Read_Data_ Block_Size	0x000A		Status, Max_ACL_Data_Packet_Length, Data_Block_Length, Total_Num_Data_Blocks

Description:

The Read Data Block Size command is used to read values regarding the maximum permitted data transfers over the Controller and the data buffering available in the Controller.

The Host uses this information when fragmenting data for transmission, and when performing block-based flow control, based on the Number Of Completed Data Blocks event. The Read Data Block Size command shall be issued by the Host before it sends any data to the Controller.

Command Parameters:

None.

Return Parameters:

Status: *Size: 1 Octet*

Value	Parameter Description
0x00	Read_Data_Block_Size command succeeded.
0x01-0xFF	Read_Data_Block_Size command failed. See "Error Codes" on page 335 [Part D] for a list of error codes and descriptions.

Max_ACL_Data_Packet_Length: *Size: 2 Octets*

Value	Parameter Description
0xXXXX	Maximum length (in octets) of the data portion of an HCI ACL Data Packet that the Controller is able to accept for transmission. For AMP Controllers this always equals to Max_PDU_Size.

Data_Block_Length: *Size: 2 Octets*

Value	Parameter Description
0xXXXX	Maximum length (in octets) of the data portion of each HCI ACL Data Packet that the Controller is able to hold in each of its data block buffers.

Total_Num_Data_Blocks: *Size: 2 Octets*

Value	Parameter Description
0xXXXX	Total number of data block buffers available in the Controller for the storage of data packets scheduled for transmission.

Event(s) generated (unless masked away):

When the Read_Data_Block_Size command has completed, a Command Complete event shall be generated.

7.5 STATUS PARAMETERS

The Controller modifies all status parameters. These parameters provide information about the current state of the Link Manager and Baseband in the BR/EDR Controller and the PAL in an AMP Controller. The host device cannot modify any of these parameters other than to reset certain specific parameters.

For the Status Parameters Commands, the OGF is defined as 0x05.

7.5.1 Read Failed Contact Counter Command

Command	OCF	Command Parameters	Return Parameters
HCI_Read_Failed_ Contact_Counter	0x0001	Handle	Status, Handle, Failed_Contact_Counter

Description:

This command will read the value for the Failed_Contact_Counter parameter for a particular connection to another device. The Handle must be a Connection_Handle for an ACL connection. See Section 6.15 on page 424.

Command Parameters:

Handle: *Size: 2 Octets (12 Bits meaningful)*

Value	Parameter Description
0xXXXX	The Handle for the Connection for which the Failed Contact Counter should be read. The Handle is a Connection Handle for a BR/EDR Controller and a Logical Link Handle for an AMP Controller. Range: 0x0000-0x0EFF (0x0F00 - 0x0FFF Reserved for future use)

Return Parameters:

Status: *Size: 1 Octet*

Value	Parameter Description
0x00	Read_Failed_Contact_Counter command succeeded.
0x01-0xFF	Read_Failed_Contact_Counter command failed. See "Error Codes" on page 335 [Part D] for a list of error codes and descriptions.

Handle: *Size: 2 Octets (12 Bits meaningful)*

Value	Parameter Description
0xXXXX	The Handle for the Connection for which the Failed Contact Counter has been read. The Handle is a Connection Handle for a BR/EDR Controller and a Logical Link Handle for an AMP Controller. Range: 0x0000-0x0EFF (0x0F00 - 0x0FFF Reserved for future use)

Failed_Contact_Counter: *Size: 2 Octets*

Value	Parameter Description
0xXXXX	Number of consecutive failed contacts for a connection corresponding to the Handle.

Event(s) generated (unless masked away):

When the Read_Failed_Contact_Counter command has completed, a Command Complete event will be generated.

7.5.2 Reset Failed Contact Counter Command

Command	OCF	Command Parameters	Return Parameters
HCI_Reset_Failed_ Contact_Counter	0x0002	Handle	Status, Handle

Description:

This command will reset the value for the Failed_Contact_Counter parameter for a particular connection to another device. The Handle must be a Connection_Handle for an ACL connection. See Section 6.15 on page 424.

Command Parameters:

Handle: *Size: 2 Octets (12 Bits meaningful)*

Value	Parameter Description
0xXXXX	The Connection Handle for the Connection for which the Failed Contact Counter should be reset. The Handle is a Connection Handle for a BR/EDR Controller and a Logical Link Handle for an AMP Controller. Range: 0x0000-0x0EFF (0x0F00 - 0x0FFF Reserved for future use)

Return Parameters:

Status: *Size: 1 Octet*

Value	Parameter Description
0x00	Reset_Failed_Contact_Counter command succeeded.
0x01-0xFF	Reset_Failed_Contact_Counter command failed. See "Error Codes" on page 335 [Part D] for a list of error codes and descriptions.

Handle: *Size: 2 Octets (12 Bits meaningful)*

Value	Parameter Description
0xXXXX	The Handle for the Connection for which the Failed Contact Counter has been reset. The Handle is a Connection Handle for a BR/EDR Controller and a Logical Link Handle for an AMP Controller. Range: 0x0000-0x0EFF (0x0F00 - 0x0FFF Reserved for future use)

Event(s) generated (unless masked away):

When the Reset_Failed_Contact_Counter command has completed, a Command Complete event will be generated.

7.5.3 Read Link Quality Command

Command	OCF	Command Parameters	Return Parameters
HCI_Read_Link_Quality	0x0003	Handle	Status, Handle, Link_Quality

Description:

This command will return the value for the Link_Quality for the specified Handle. The Handle must be a Handle for an ACL connection. This command will return a Link_Quality value from 0-255, which represents the quality of the link

between two BR/EDR Controllers. The higher the value, the better the link quality is. Each Bluetooth module vendor will determine how to measure the link quality.

The Read Link Quality command is provided by AMPs. The meaning of the link quality metric is AMP type specific and defined in the AMP PALs (see Volume 5).

Command Parameters:

Handle: *Size: 2 Octets (12 Bits meaningful)*

Value	Parameter Description
0xXXXX	The Handle for the connection for which link quality parameters are to be read. The Handle is for a BR/EDR Controller and a Physical Link Handle for an AMP Controller. Range: 0x0000-0x0EFF (0x0F00 - 0x0FFF Reserved for future use)

Return Parameters:

Status: *Size: 1 Octet*

Value	Parameter Description
0x00	Read_Link_Quality command succeeded.
0x01-0xFF	Read_Link_Quality command failed. See "Error Codes" on page 335 [Part D] for a list of error codes and descriptions.

Handle: *Size: 2 Octets (12 Bits meaningful)*

Value	Parameter Description
0xXXXX	The Handle for the connection for which the link quality parameter has been read. The Handle is a Connection_Handle for a BR/EDR Controller and a Physical_Link_Handle for an AMP Controller. Range: 0x0000-0x0EFF (0x0F00 - 0x0FFF Reserved for future use)

Link_Quality: *Size: 1 Octet*

Value	Parameter Description
0xXX	The current quality of the Link connection between the local device and the remote device specified by the Connection Handle. Range: 0x00 – 0xFF The higher the value, the better the link quality is.

Event(s) generated (unless masked away):

When the Read_Link_Quality command has completed, a Command Complete event will be generated.

7.5.4 Read RSSI Command

Command	OCF	Command Parameters	Return Parameters
HCI_Read_RSSI	0x0005	Handle	Status, Handle, RSSI

Description:

This command will read the Received Signal Strength Indication (RSSI) value from a Controller.

For a BR/EDR Controller, a Connection_Handle is used as the Handle command parameter and return parameter. The RSSI parameter returns the difference between the measured Received Signal Strength Indication (RSSI) and the limits of the Golden Receive Power Range for a Connection Handle to another BR/EDR Controller. The Connection_Handle must be a Connection_Handle for an ACL connection. Any positive RSSI value returned by the Controller indicates how many dB the RSSI is above the upper limit, any negative value indicates how many dB the RSSI is below the lower limit. The value zero indicates that the RSSI is inside the Golden Receive Power Range.

Note: how accurate the dB values will be depends on the Bluetooth hardware. The only requirements for the hardware are that the BR/EDR Controller is able to tell whether the RSSI is inside, above or below the Golden Device Power Range.

The RSSI measurement compares the received signal power with two threshold levels, which define the Golden Receive Power Range. The lower threshold level corresponds to a received power between -56 dBm and 6 dB above the actual sensitivity of the receiver. The upper threshold level is 20 dB above the lower threshold level to an accuracy of +/- 6 dB.

For an AMP Controller, a Physical Link Handle is used for the Handle command parameter and return parameter. The meaning of the RSSI metric is AMP type specific and defined in the AMP PALs (see Volume 5).

Command Parameters:

Handle: *Size: 2 Octets (12 Bits meaningful)*

Value	Parameter Description

0xXXXX	The Handle for the Connection for which the RSSI is to be read. The Handle is a Connection Handle for a BR/EDR Controller and a Physical Link Handle for an AMP Controller. Range: 0x0000-0x0EFF (0x0F00 - 0x0FFF Reserved for future use)

Return Parameters:

Status: *Size: 1 Octet*

Value	Parameter Description
0x00	Read_RSSI command succeeded.
0x01-0xFF	Read_RSSI command failed. See "Error Codes" on page 335 [Part D] for a list of error codes and descriptions.

Handle: *Size: 2 Octets (12 Bits meaningful)*

Value	Parameter Description
0xXXXX	The Handle for the Connection for which the RSSI has been read. The Handle is a Connection Handle for a BR/EDR Controller and a Physical Link Handle for an AMP Controller. Range: 0x0000-0x0EFF (0x0F00 - 0x0FFF Reserved for future use)

RSSI: *Size: 1 Octet*

Value	Parameter Description
	BR/EDR Range: -128 ≤ N ≤ 127 (signed integer) Units: dB AMP: Range: AMP type specific (signed integer) Units: dBm

Event(s) generated (unless masked away):

When the Read_RSSI command has completed, a Command Complete event will be generated.

7.5.5 Read AFH Channel Map Command

Command	OCF	Command Parameters	Return Parameters
Read_AFH _Channel_Map	0x0006	Connection_Handle	Status, Connection_Handle, AFH_Mode, AFH_Channel_Map

Description:

This command will return the values for the AFH_Mode and AFH_Channel_Map for the specified Connection Handle. The Connection_Handle must be a Connection_Handle for an ACL connection.

The returned values indicate the state of the hop sequence specified by the most recent LMP_Set_AFH message for the specified Connection_Handle, regardless of whether the master has received the baseband ACK or whether the AFH_Instant has passed.

This command shall be supported by a device that declares support for either the AFH_capable_slave or AFH_capable_master feature.

Command Parameters:

Connection_Handle: *Size: 2 Octets (12 Bits meaningful)*

Value	Parameter Description
0xXXXX	The Connection Handle for the Connection for which the Channel Map is to be read. Range: 0x0000-0x0EFF (0x0F00-0x0FFF Reserved for future use)

Return Parameters:

Status: *Size: 1 Octet*

Value	Parameter Description
0x00	Read_AFH_Channel_Map command succeeded.
0x01-0xFF	Read_AFH_Channel_Map command failed. See "Error Codes" on page 335 [Part D] for a list of error codes and descriptions.

Connection_Handle: *Size: 2 Octets (12 Bits meaningful)*

Value	Parameter Description
0xXXXX	The Connection Handle for the Connection for which the Channel Map is to be read. Range: 0x0000-0x0EFF (0x0F00-0x0FFF Reserved for future use)

AFH_Mode: *Size: 1 Octet*

Value	Parameter Description
0x00	AFH disabled.
0x01	AFH enabled.
0x02-0xFF	Reserved for future use.

AFH_Channel_Map: *Size: 10 Octets (79 Bits meaningful)*

Value	Parameter Description
0xXXXXXXXX XXXXXXXX XXX	If AFH_Mode is AFH enabled then this parameter contains 79 1-bit fields, otherwise the contents are reserved. The nth such field (in the range 0 to 78) contains the value for channel *n*: Channel *n* is unused = 0 Channel *n* is used = 1 Range: 0x00000000000000000000-0x7FFFFFFFFFFFFFFFFFFF (0x80000000000000000000-0xFFFFFFFFFFFFFFFFFFFF Reserved for future use)

Event(s) generated (unless masked away):

When the Read_AFH_Channel_Map command has completed, a Command Complete event will be generated.

7.5.6 Read Clock Command

Command	OCF	Command Parameters	Return Parameters
HCI_Read_Clock	0x0007	Connection_Handle Which_Clock	Status, Connection_Handle, Clock, Accuracy

Description:

This command will read the estimate of the value of the Bluetooth Clock from the BR/EDR Controller.

If the Which_Clock value is 0, then the Connection_Handle shall be ignored, and the local Bluetooth Clock value shall be returned, and the accuracy parameter shall be set to 0.

If the Which_Clock value is 1, then the Connection_Handle must be a valid ACL Connection Handle. If the current role of this ACL connection is Master, then the Bluetooth Clock of this device shall be returned. If the current role is Slave, then an estimate of the Bluetooth Clock of the remote master and the accuracy of this value shall be returned.

The accuracy reflects the clock drift that might have occurred since the slave last received a valid transmission from the master.

Note: The Bluetooth Clock has a minimum accuracy of 250ppm, or about 22 seconds drift in one day.

Note: See Baseband Specification, Section 1.1, on page 64 for more information about the Bluetooth Clock.

Command Parameters:

Connection_Handle: *Size: 2 Octets (12 Bits meaningful)*

Value	Parameter Description
0xXXXX	Connection Handle to be used to identify which connection to be used for reading the masters Bluetooth Clock. Range: 0x0000-0x0EFF (0x0F00 – 0x0FFF Reserved for future use)

Which_Clock: *Size 1 Octet)*

Value	Parameter Description
0xXX	0x00 = Local Clock (Connection Handle does not have to be a valid handle) 0x01 = Piconet Clock (Connection Handle shall be a valid ACL Handle) 0x02 to 0xFF = Reserved

Return Parameters:

Status: *Size: 1 Octet*

Value	Parameter Description
0x00	Read_BD_CLOCK command succeeded.
0x01 – 0xFF	Read_BD_CLOCK command failed. See "Error Codes" on page 335 [Part D] for a list of error codes and descriptions.

Connection_Handle: *Size: 2 Octets (12 Bits meaningful)*

Value	Parameter Description
0xXXXX	The Connection Handle for the Connection for which the master clock has been read. If the Which_Clock was 0, then the Connection_Handle shall be set to 0 and ignored upon receipt. Range: 0x0000-0x0EFF (0x0F00 – 0x0FFF Reserved for future use)

Clock: *Size: 4 Octets (28 bits meaningful)*

Value	Parameter Description
0xXXXXXXXX	Bluetooth Clock of the device requested.

Accuracy: *Size: 2 Octets*

Value	Parameter Description
0xXXXX	+/- maximum Bluetooth Clock error. Value of 0xFFFF means Unknown. Accuracy = +/- N * 0.3125 msec (1 Bluetooth Clock) Range for N: 0x0000 - 0xFFFE Time Range for N: 0 - 20479.375 msec

Event(s) generated (unless masked away):

When the Read_Clock command has completed, a Command Complete event will be generated.

7.5.7 Read Encryption Key Size Command

Command	OCF	Command Parameters	Return Parameters
HCI_ Read_Encryption_ Key_Size	0x0008	Connection_Handle	Status, Connection_Handle, Key_Size

Description:

This command will read the current encryption key size associated with the Connection_Handle. The Connection_Handle shall be a connection handle for an active ACL connection.

Command Parameters:

Connection_Handle: *Size: 2 Octets (12 bits meaningful)*

Value	Parameter Description
0xXXXX	Connection Handle for the encryption key size to be read from. Range: 0x0000-0x0EFF (0x0F00 - 0x0FFF Reserved for future use).

Return Parameters:

Status: *Size: 1 Octet*

Value	Parameter Description
0x00	Read Encryption Key Size succeeded
0x01 - 0xFF	Read Encryption Key Size failed. See "Error Codes" on page 335 [Part D] for a list of error codes and descriptions.

Connection_Handle: *Size: 2 Octets (12 bits meaningful)*

Value	Parameter Description
0xXXXX	Connection Handle for the encryption key size. Range: 0x0000-0x0EFF (0x0F00 - 0x0FFF Reserved for future use).

Key_Size: *Size: 1 Octet*

Value	Parameter Description
0xXX	Encryption key size. See [Vol 2 Part C], Section 5.2.

Event(s) generated (unless masked away):

When the Read_Encryption_Key_Size command has completed, a Command_Complete event shall be generated.

If the ACL connection associated with the Connection_Handle is not encrypted, the Controller shall return a Command_Complete event with the error code Insufficient Security (0x2F).

7.5.8 Read Local AMP Info Command

Command	OCF	Command Parameters	Return Parameters
HCI_Read_Local_AMP_Info	0x0009		Status, AMP_Status, Total_Bandwidth, Max_Guaranteed_Bandwidth, Min_Latency, Max_PDU_Size, Controller_Type, PAL_Capabilities, Max_AMP_ASSOC_Length, Max_Flush_Timeout, Best_Effort_Flush_Timeout

Description:

This command returns information about the AMP Controller.

Command Parameters:

None.

Return Parameters:

Status: *Size: 1 Octet*

Value	Parameter Description
0x00	Read_Local_AMP_Info command succeeded
0x01-0xFF	Read_Local_AMP_Info command failed. See “Error Codes” on page 335 [Part D] for list of Error Codes.

AMP_Status: *Size: 1 Octet*

Value	Parameter Description
0x00	The Controller is available but is currently physically powered down. This value shall be used if the AMP Controller is present and can be powered up by the AMP Manager. This value indicates that there may be a cost of time and power to use this AMP Controller (i.e., the time taken and power required to power up the AMP Controller). These costs are AMP type and AMP implementation dependent.

Value	Parameter Description
0x01	This value indicates that the AMP Controller is only used by Bluetooth technology and will not be shared with other non-Bluetooth technologies. This value shall only be used if the AMP Controller is powered up. This value does not indicate how much bandwidth is currently free on the AMP Controller.
0x02	The AMP Controller has no capacity available for Bluetooth operation This value indicates that all of the AMP Controller's bandwidth is currently allocated to servicing a non Bluetooth technology. A device is permitted to create a Physical Link to an AMP Controller that has this status. This value shall only be used if the AMP Controller is powered up.
0x03	The AMP Controller has low capacity available for Bluetooth operation. This value indicates that the majority of the AMP Controller's bandwidth is currently allocated to servicing a non Bluetooth technology. An AMP Controller with capacity in the approximate range of 0% to 30% should indicate this value. This value does not indicate how much of the capacity available for Bluetooth operation is currently available. This value shall only be used if the AMP Controller is powered up.
0x04	The AMP Controller has medium capacity available for Bluetooth operation. An AMP Controller with capacity in the approximate range of 30% to 70% should indicate this value. This value does not indicate how much of the capacity available for Bluetooth operation is currently available. This value shall only be used if the AMP Controller is powered up.
0x05	The AMP Controller has high capacity available for Bluetooth operation. This value indicates that the majority of the AMP Controller's bandwidth is currently allocated to servicing the Bluetooth technology. An AMP Controller with capacity in the approximate range of 70% to 100% should indicate this value. This value does not indicate how much of the capacity available for Bluetooth operation is currently available. This value shall only be used if the AMP Controller is powered up.

Value	Parameter Description
0x06	The AMP Controller has full capacity available for Bluetooth operation. This value indicates that while currently the AMP is only being used by Bluetooth the device allows a different technology to share the radio. This value shall be used by devices that are not capable of determining the current available capacity of an AMP that is shared by a different technology. This value does not indicate how much of the capacity available for Bluetooth operation is currently available. This value shall only be used if the AMP Controller is powered up.
0x07 - 0xFF	Reserved

The AMP Controller to generate AMP_Status_Change event if this parameter changes after initial Read_Local_AMP_Info request. See AMP Manager Protocol Specification, Part E Section 3.4.

Total_Bandwidth: *Size: 4 Octets*

Value	Parameter Description
	An upper bound on the total data rate that can be achieved by the AMP over HCI. It accounts for the total bandwidth provided by the HCI transport. No sustained combination of transmit and receive operations shall exceed this value. This can be used to help in AMP selection and admission control. Expressed in kbps.

Max_Guaranteed_Bandwidth: *Size: 4 Octets*

Value	Parameter Description
	An upper bound on the maximum data the AMP can guarantee for a single logical link over HCI. Any request made by an application above this threshold would be rejected. It accounts for any bandwidth limitations of the HCI transport. No sustained combination of transmit and receive operations shall exceed this value. This can be used to help in AMP selection and admission control. Expressed in kbps.

Min_Latency: *Size: 4 Octets*

Value	Parameter Description
	A lower bound on the latency in microseconds that the AMP can guarantee for a logical channel. It accounts for the minimum latency of the HCI transport. This can be used to help in AMP selection and admission control.

Max_PDU_Size: *Size: 4 Octets*

Value	Parameter Description
	An upper bound on the size of L2CAP PDU which may be provided for transmission or reception on this AMP. The Host shall not require the AMP to transport L2CAP PDUs larger than this value. Expressed in octets.The Maximum PDU Size parameter described in Section 5.4 [Vol 3] Part A for any connection over this AMP should not exceed this value.

Controller_Type: *Size: 1 Octet*

Value	Parameter Description
See Bluetooth Assigned Numbers.	

PAL_Capabilities: *Size: 2 Octets*

Value	Parameter Description
0xXXXX	Bit 0: "Service Type = Guaranteed" is supported by PAL = 1 Bits 15-1: Reserved (shall be set to 0) (See Logical Link Control and Adaptation Protocol Specification, Section 5.6 on page 85 [Vol 3] Part A.)

Max_AMP_ASSOC_Length: *Size: 2 Octets*

Value	Parameter Description
0xXXXX	AMP_ASSOC maximum length for this local AMP Controller. For use with Read and Write AMP_ASSOC commands [Section 7.5.8 and Section 7.5.9]. This value is sent to the remote AMP Manager in the AMP Get Info Response (see "[Vol. 3], Part E, Section 3.8 on page 380).

Max_Flush_Timeout: *Size: 4 Octets*

Value	Parameter Description
0xXXXXXXXX	Maximum time period, in microseconds, which the AMP device uses to attempt to transmit a frame on a Guaranteed Logical Link. If the Controller is configured to retry frames for an unbounded time (i.e. there is no flushing at all), then it shall set this value to 0xFFFFFFFF.

Best_Effort_Flush_Timeout *Size: 4 Octets*

Event(s) generated (unless masked away):

When the Read Local AMP Info command has completed, a Command Complete event will be generated.

Value	Parameter Description
0xXXXXXXXX	The typical time period, in microseconds, which the AMP device may use to attempt to transmit a frame on a Best Effort Logical Link. The value shall not exceed the value given in Max_Flush_Timeout. If the Controller is configured to retry frames for an unbounded time (i.e. there is no flushing at all), then it shall set this value to 0xFFFFFFFF.

7.5.9 Read Local AMP ASSOC Command

Command	OCF	Command Parameters	Return Parameters
HCI_ Read_Local_AMP_ASSOC	0x000A	Physical_Link_Handle, Length_So_Far, Max_Remote_ AMP_ASSOC_Length	Status, Physical_Link_Handle, AMP_ASSOC_ Remaining_Length, AMP_ASSOC_fragment

Description:

This command will return a fragment of the AMP_ASSOC structure. The AMP_ASSOC contains information in an AMP type specific format and is defined in the AMP PALs (see Volume 5). This may include a combination of address, capabilities and status information. This command can be used when creating an AMP physical link as given by the Physical Link Handle parameter, see the Create Physical Link command for more details. If the command is being executed outside of the context of any physical link creation, then the Physical Link Handle shall be 0x00.

The Controller shall limit the returned AMP_ASSOC to Max_AMP_ASSOC_Length octets. The Host shall set this parameter to the "AMP_ASSOC_Size" value returned from the remote device in the AMP Get Info Response (see AMP Manager Protocol Specification, [Vol 3 Part E], Section 3.8).

The AMP_ASSOC length may be larger that can fit in a single HCI event. Each time the Read Local AMP_ASSOC command is called, the remaining length of the AMP_ASSOC (including the data returned in the complete event) is included in the AMP_ASSOC_Remaining_Length parameter and data from the AMP_ASSOC is contained in the AMP_ASSOC_fragment parameter. In order to obtain the entire AMP_ASSOC, a Host shall continue calling Read Local AMP_ASSOC until the AMP_ASSOC_Remaining_Length parameter returned is equal to the size of the AMP_ASSOC_fragment in that event.

The Length_So_Far parameter shall be set to 0 to obtain the first AMP_ASSOC_fragment. Subsequent fragments are obtained by incrementing the Length_So_Far parameter by the length of the previous fragment.

Once the Host begins reading an AMP_ASSOC, all fragments returned in a sequence of HCI_Read_Local_AMP_ASSOC commands shall be from one, static AMP_ASSOC.

Command Parameters:

Physical_Link_Handle: *Size: 1 Octet*

Value	Parameter Description
0x00	Used to indicate invalid Physical_Link_Handle
0xXX	Physical Link Handle which describes the link to which the AMP_ASSOC belongs.

Length_So_Far: *Size: 2 Octets*

Value
Set Length_So_Far to 0 for the first fragment. Increment parameter by the length of the previous fragment, for each subsequent call

AMP_ASSOC_Length : *Size: 2 Octets*

Value	Parameter Description
0xXXXX	The maximum length, in octets, allowed by the Host for the AMP_ASSOC maximum length for the remote returned by the AMP Controller. For use with Read command to prevent interoperability issues.

Return Parameters:

Status: *Size: 1 Octet*

Value	Parameter Description
0x00	Read_Local_AMP_ASSOC command succeeded
0x01-0xFF	Read_Local_AMP_ASSOC command failed. See "Error Codes" on page 335 [Part D] for list of Error Codes.

Physical_Link_Handle: *Size: 1 Octet*

Value	Parameter Description
0xXX	Physical Link Handle identifying the physical link to be created with the associated AMP_ASSOC.

AMP_ASSOC_Remaining_Length: *Size: 2 Octets*

Value	Parameter Description
1-size of variable	Length, in octets, of the remainder of the AMP_ASSOC including this fragment.
0	Reserved

AMP_ASSOC_fragment: *Size: 1 to 248 Octets*

Value
A fragment of the local AMP_ASSOC structure created by a remote AMP of the same Controller type. A fragment, other than the final one, may not be less than 248 bytes in length.

Event(s) generated (unless masked away):

When the Read Local AMP ASSOC command has completed, a Command Complete event will be generated.

7.5.10 Write Remote AMP ASSOC Command

Command	OCF	Command Parameters	Return Parameters
HCI_Write_Remote_AMP_ASSOC	0x000B	Physical_Link_Handle, Length_So_Far, AMP_ASSOC_Remaining_Length, AMP_ASSOC_fragment	Status, Physical_Link_Handle

Description:

This command will write an AMP_ASSOC fragment to the AMP Controller. The AMP_ASSOC contains information in an AMP type specific format and is defined in the AMP PALs (see Volume 5). This may include a combination of

address, capabilities and status information. This command may be used when creating an AMP physical link. See the Create Physical Link command for more details.

The AMP_ASSOC length may be larger that can fit in a single HCI command. Each time the Write Remote AMP_ASSOC command is called, the remaining length of the AMP_ASSOC (including the data provided in the command) is included in the AMP_ASSOC_Remaining_Length parameter and data from the AMP_ASSOC is contained in the AMP_ASSOC_fragment parameter. In order to write the entire AMP_ASSOC to the Controller, a Host shall continue calling Write Remote AMP_ASSOC until the AMP_ASSOC_Remaining_Length parameter returned is equal to the size of the AMP_ASSOC_fragment in that command.

The Write Local AMP_ASSOC command shall be called immediately after the Command Status (with result of success) for either the Create Physical Link or Accept Physical Link commands.

The Length_So_Far parameter shall be set to 0 to write the first AMP_ASSOC_fragment. Subsequent fragments are written by incrementing the Length_So_Far parameter by the length of the previous fragment.

Command Parameters:

Physical_Link_Handle: *Size: 1 Octet*

Value	Parameter Description
0xXX	Physical Link Handle identifying the physical link to be created with the associated AMP_ASSOC.

Length_So_Far: *Size: 2 Octets*

Value
Set Length_So_Far to 0 for the first fragment. Increment it by the length of the previous fragment, for each subsequent call.

AMP_ASSOC_Remaining_Length: *Size: 2 Octets*

Value	Parameter Description
0x0001-Max_AMP_ASSOC_Length	Length, in octets, of the remainder of the AMP_ASSOC, including this fragment. Max_AMP_ASSOC_Length as reported in Read_Local_AMP_Info command.
0x0000	Reserved

AMP_ASSOC_fragment: *Size: 1 to 248 Octets*

Value
A fragment of the AMP_ASSOC structure created by a remote AMP of the same Controller type.
The fragment length shall be 248 bytes for all but the last fragment.

Return Parameters:

Status: *Size: 1 Octet*

Value	Parameter Description
0x00	Write_Remote_AMP_ASSOC command succeeded
0x01-0xFF	Write_Remote_AMP_ASSOC command failed. See ""Error Codes" on page 335 [Part D] for list of Error Codes.

Physical_Link_Handle: *Size: 1 Octet*

Value	Parameter Description
0xXX	Physical Link Handle identifying the physical link to be created with the associated AMP_ASSOC.

Event(s) generated (unless masked away):

When the Write Remote AMP ASSOC command has completed, a Command Complete event shall be generated.

7.6 TESTING COMMANDS

The Testing commands are used to provide the ability to test various functional capabilities of the Bluetooth hardware. These commands provide the ability to arrange various conditions for testing.

For the Testing Commands, the OGF is defined as 0x06.

7.6.1 Read Loopback Mode Command

Command	OCF	Command Parameters	Return Parameters
HCI_Read_Loopback_Mode	0x0001		Status, Loopback_Mode

Description:

This command will read the value for the setting of the Controller's Loopback Mode. The setting of the Loopback Mode will determine the path of information. In Non-testing Mode operation, the Loopback Mode is set to Non-testing Mode and the path of the information is as specified by the Bluetooth specifications. In Local Loopback Mode, every Data Packet (ACL, SCO and eSCO) and Command Packet that is sent from the Host to the Controller is sent back with no modifications by the Controller, as shown in Figure 7.1 on page 647. For details of loopback modes see Section 7.6.2 on page 645.

Command Parameters:

None.

Return Parameters:

Status: *Size: 1 Octet*

Value	Parameter Description
0x00	Read_Loopback_Mode command succeeded.
0x01-0xFF	Read_Loopback_Mode command failed. See "Error Codes" on page 335 [Part D] for a list of error codes and descriptions.

Loopback_Mode: *Size: 1 Octet*

Value	Parameter Description
0x00	No Loopback mode enabled. **Default.**
0x01	Enable Local Loopback.
0x02	Enable Remote Loopback. (Not supported by AMPs)
0x03-0xFF	Reserved for Future Use.

Event(s) generated (unless masked away):

When the Read_Loopback_Mode command has completed, a Command Complete event will be generated.

7.6.2 Write Loopback Mode Command

Command	OCF	Command Parameters	Return Parameters
HCI_Write_Loopback_Mode	0x0002	Loopback_Mode	Status

Description:

This command will write the value for the setting of the BR/EDR Controller's Loopback Mode. The setting of the Loopback Mode will determine the path of information. In Non-testing Mode operation, the Loopback Mode is set to Non-testing Mode and the path of the information as specified by the Bluetooth specifications. In Local Loopback Mode, every Data Packet (ACL, SCO and eSCO) and Command Packet that is sent from the Host to the BR/EDR Controller is sent back with no modifications by the BR/EDR Controller, as shown in Figure 7.1 on page 647.

When the BR/EDR Controller enters Local Loopback Mode, it shall respond with one to four Connection Handles, one for an ACL connection and zero to three for synchronous connections. The Host should use these Connection Handles when sending data in Local Loopback Mode. The number of Connection Handles returned for synchronous connections (between zero and three) is implementation specific. When in Local Loopback Mode, the BR/EDR Controller loops back commands and data to the Host. The Loopback Command event is used to loop back commands that the Host sends to the Controller.

When an AMP enters Local Loopback Mode, all data transmission will be looped back with the received Logical Link Handle value, without checking the validity of the Logical Link Handle. This allows local loopback of data without any link creation, and without any data transmission over the air.

‘There are some commands that are not looped back in Local Loopback Mode: Reset, Set_Controller_To_Host_Flow_Control, Host_Buffer_Size, Host_Number_Of_Completed_Packets, Read_Buffer_Size, Read_Loopback_Mode and Write_Loopback_Mode. These commands should be executed in the way they are normally executed. The commands Reset and Write_Loopback_Mode can be used to exit local loopback mode.

If Write_Loopback_Mode is used to exit Local Loopback Mode on a BR/EDR Controller, Disconnection Complete events corresponding to the Connection Complete events that were sent when entering Local Loopback Mode should be sent to the Host. Furthermore, no connections are allowed in Local Loopback mode. If there is a connection, and there is an attempt to set the device to Local Loopback Mode, the attempt will be refused. When the device is in Local Loopback Mode, the Controller will refuse incoming connection attempts. This allows the Host BR/EDR Controller Transport Layer to be tested without any other variables.

If a BR/EDR Controller is set to Remote Loopback Mode, it will send back all data (ACL, SCO and eSCO) that comes over the air. It will only allow a maximum of one ACL connection and three synchronous connections, and these shall all be to the same remote device. If there are existing connections to a remote device and there is an attempt to set the local device to Remote Loopback Mode, the attempt shall be refused.

If a Host sets Loopback Mode to “Remote Loopback” on an AMP controller, the Controller shall reject the command with the error code Invalid HCI command parameter (0x12).

See Figure 7.2 on page 647, where the rightmost device is set to Remote Loopback Mode and the leftmost device is set to Non-testing Mode. This allows the BR/EDR Air link to be tested without any other variables.

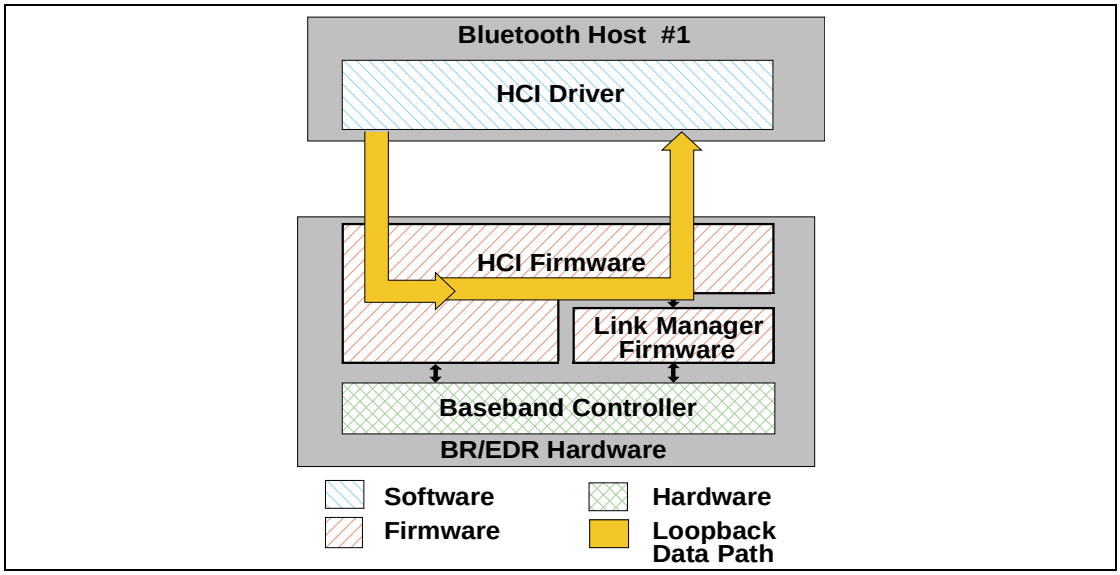

Figure 7.2: Local Loopback Mode

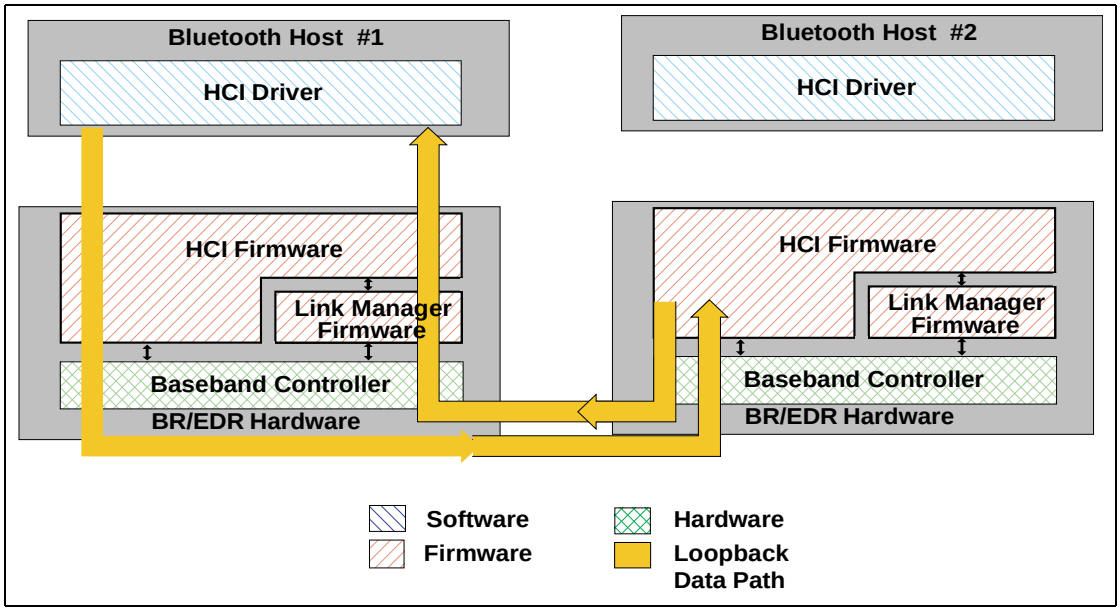

Figure 7.3: Remote Loopback Mode

Command Parameters:

Loopback_Mode: *Size: 1 Octet*

Value	Parameter Description
0x00	No Loopback mode enabled. **Default.**
0x01	Enable Local Loopback.
0x02	Enable Remote Loopback. (Not Supported by AMPs)
0x03-0xFF	Reserved for Future Use.

Return Parameters:

Status: *Size: 1 Octet*

Value	Parameter Description
0x00	Write_Loopback_Mode command succeeded.
0x01-0xFF	Write_Loopback_Mode command failed. See "Error Codes" on page 335 [Part D] for a list of error codes and descriptions.

Event(s) generated (unless masked away):

When the Write_Loopback_Mode command has completed, a Command Complete event will be generated.

7.6.3 Enable Device Under Test Mode Command

Command	OCF	Command Parameters	Return Parameters
HCI_Enable_Device_Under_ Test_Mode	0x0003		Status

Description:

The Enable_Device_Under_Test_Mode command will allow the local BR/EDR Controller to enter test mode via LMP test commands for BR/EDR Controllers or via the AMP Test Command for AMP Controllers. For details see "Link Manager Protocol Specification" on page 205 [Part C] for BR/EDR controllers or Section 7.6.7 for AMP controllers. The Host issues this command when it wants the local device to be the DUT for the Testing scenarios as described in the "Test Methodology" on page 335[vol. 3]. When the BR/EDR Controller receives this command, it will complete the command with a Command Complete event. The BR/EDR Controller functions as normal until the remote tester issues the LMP test command or for AMPs the AMP Test Command to place the local device into Device Under Test mode. To disable and exit the Device Under Test Mode, the Host can issue the HCI_Reset command. This command prevents remote BR/EDR Controllers from causing the local BR/EDR Controller to enter test mode without first issuing this command.

Command Parameters:

None.

Return Parameters:

Status: *Size: 1 Octet*

Value	Parameter Description
0x00	Enter_Device_Under_Test_Mode command succeeded.
0x01-0xFF	Enter_Device_Under_Test_Mode command failed. See "Error Codes" on page 335 [Part D] for a list of error codes and descriptions.

Event(s) generated (unless masked away):

When the Enter_Device_Under_Test_Mode command has completed, a Command Complete event will be generated.

7.6.4 Write Simple Pairing Debug Mode Command

Description:

Command	OCF	Command Parameters	Return Parameters
HCI_Write_Simple_Pairing_Debug_mode	0x0004	Simple_Pairing_Debug_Mode	Status

This command configures the BR/EDR Controller to use a predefined Diffie Hellman private key for Simple Pairing to enable debug equipment to monitor the encrypted connection.

Note: only one side (initiator or responder) needs to set simple pairing debug mode in order for debug equipment to be able to determine the link key and, therefore, be able to monitor the encrypted connection.

When the Simple_Pairing_Debug_Mode parameter is set to enabled the BR/EDR Controller shall use the predefined Diffie Hellman private key. The BR/EDR Controller shall also set the resulting Link_Key type to "Debug Combination Key."

When in Simple Pairing debug mode, the Link Manager shall use the following Diffie Hellman private / public key pair:

- Private key: 07915f86918ddc27005df1d6cf0c142b625ed2eff4a518ff
- Public key (X): 15207009984421a6586f9fc3fe7e4329d2809ea51125f8ed
- Public key (Y): b09d42b81bc5bd009f79e4b59dbbaa857fca856fb9f7ea25

Command Parameters:

Simple_Pairing_Debug_Mode: *Size: 1 Octet*

Value	Parameter Description
0x00	Simple Pairing debug mode disabled (default)
0x01	Simple pairing debug mode enabled
0x02 - 0xFF	Reserved for future use

Return Parameters:

Status: *Size: 1 Octet*

Value	Parameter Description
0x00	Write_Simple_Pairing_Mode command succeeded.
0x01 - 0xFF	Write_Simple_Pairing_Mode command failed. See “Error Codes” on page 335 [Part D] for a list of error codes and descriptions.

Event(s) generated (unless masked away):

When the Write_Simple_Pairing_Debug_Mode command has completed, a Command Complete event shall be generated.

7.6.5 Enable AMP Receiver Reports Command

Command	OCF	Command Parameters	Return Parameters
HCI_Enable_AMP_Receiver_Reports	0x0007	Enable, Interval	Status

Description:

This command is used to enable and disable the reporting of frames received. This command shall only be valid in AMP Test Mode. After multiples of the specified Interval, a report of frames that have been received/not received by the DUT shall be sent to the tester. Optionally the sums of bits in error are also reported. The values returned are the cumulative totals since the mode was last initiated or reset. The totals are reset by sending the HCI_Enable_AMP_Receiver_Reports, the HCI_AMP_Test command or the HCI_AMP_Test_End command. This event is also generated after an HCI_AMP_Test_End event.

Command Parameters:

Enable: *Size: 1 Octet*

Value	Parameter Description
0x00	Disable
0x01	Enable
0x02-0xFF	Reserved

Interval: *Size: 1 Octet*

Value	Parameter Description
0x00	Reserved
0x01-0xFF	Number of seconds between event reporting

Return Parameters:

Status: *Size: 1 Octet*

Value	Parameter Description
0x00	Enable Reports command succeeded

0x01-0xFF	Enable Reports command failed. “Error Codes” on page 335 [Part D] for a list of error codes and descriptions.

Event(s) Generated (unless masked away):

When the HCI_Enable_AMP_Receiver_Reports command has completed, a Command Complete Event shall be generated.

7.6.6 AMP Test End Command

Command	OCF	Command Parameters	Return Parameters
HCI_AMP_Test_End	0x0008		Status

Description:

This command is used to stop any test scenario which is in progress. This command shall only be used in AMP Test Mode when a test is in progress. This command shall not exit from AMP Test mode.

Command Parameters:

None.

Return Parameters:

Status: *Size: 1 Octet*

Value	Parameter Description
0x00	Test End command succeeded
0x01-0xFF	Test End command failed. “Error Codes” on page 335 [Part D] for a list of error codes and descriptions.

Event(s) Generated (unless masked away):

When the Test End command has completed a HCI_AMP_Test_End_Event shall be generated and the HCI_AMP_Receiver_Report Event shall be generated if the AMP receiver reports are enabled.

7.6.7 AMP Test Command

Command	OCF	Command Parameters	Return Parameters
HCI_AMP_Test_Command	0x0009	Test Parameters	Status

Description:

This command is used to configure and start a test. This command shall be only valid in AMP Test Mode.

When a test scenario has completed or on receiving a HCI_AMP Test_End command the AMP shall send a HCI_AMP_Test_End Event and the AMP returns to an idle state with the RX and TX off.

The details of the Test parameters for each Controller Type are detailed in the AMP PAL specification.

Command Parameters:

Controller Type	Parameter Description
0xXX	See Assigned Numbers

Return Parameters:

Status: *Size: 1 Octet*

Value	Parameter Description
0x00	AMP Test command succeeded
0x01-0xFF	Test command failed. See “Error Codes” on page 335 [Part D]

Event(s) Generated (unless masked away):

When the AMP receives the HCI_AMP_Test_Command, the AMP shall send the Command_Status event to the AMP Test Manager which shall be routed to the tester.

The HCI_AMP_Start Test Event shall be generated when the HCI_AMP_Test_Command has completed and the first data is ready to be sent or received.

Command_Complete_Event shall not be sent by the AMP to indicate that this command has been completed. Instead the HCI_AMP_Start_Test Event shall indicate that this command has been completed.

When in a transmitter test scenario and the frames/bursts count have been transmitted the HCI_AMP_Test_End event shall be sent.

7.7 EVENTS

7.7.1 Inquiry Complete Event

Event	Event Code	Event Parameters
Inquiry Complete	0x01	Status

Description:

The Inquiry Complete event indicates that the Inquiry is finished. This event contains a status parameter, which is used to indicate if the Inquiry completed successfully or if the Inquiry was not completed.

Event Parameters:

Status: *Size: 1 Octet*

Value	Parameter Description
0x00	Inquiry command completed successfully.
0x01-0xFF	Inquiry command failed. See "Error Codes" on page 335 [Part D] for a list of error codes and descriptions.

7.7.2 Inquiry Result Event

Event	Event Code	Event Parameters
Inquiry Result	0x02	Num_Responses, BD_ADDR[i], Page_Scan_Repetition_Mode[i], Reserved[i], Reserved[i], Class_of_Device[i] Clock_Offset[i]

Description:

The Inquiry Result event indicates that a BR/EDR Controller or multiple BR/EDR Controllers have responded so far during the current Inquiry process. This event will be sent from the BR/EDR Controller to the Host as soon as an Inquiry Response from a remote device is received if the remote device supports only mandatory paging scheme. The BR/EDR Controller may queue these Inquiry Responses and send multiple BR/EDR Controllers information in one Inquiry Result event. The event can be used to return one or more Inquiry responses in one event.

Event Parameters:

Num_Responses: *Size: 1 Octet*

Value	Parameter Description
0xXX	Number of responses from the Inquiry.

BD_ADDR[i]: *Size: 6 Octets * Num_Responses*

Value	Parameter Description
0xXXXXXXXXXXXX	BD_ADDR for each device which responded.

Page_Scan_Repetition_Mode[i]: *Size: 1 Octet * Num_Responses*

Value	Parameter Description
0x00	R0
0x01	R1
0x02	R2
0x03 – 0xFF	Reserved

Reserved[i]: [1] *Size: 1 Octet * Num_Responses*

Value	Parameter Description
0xXX	Reserved.

Reserved[i]: [2] *Size: 1 Octet * Num_Responses*

Value	Parameter Description
0xXX	Reserved, must be set to 0x00.

Class_of_Device[i]: *Size: 3 Octets * Num_Responses*

Value	Parameter Description
0xXXXXXX	Class of Device for the device

Clock_Offset[i]: *Size: 2 Octets * Num_Responses*

Bit format	Parameter Description
Bit 14-0	Bit 16-2 of CLKslave-CLKmaster.

1. This was the Page_Scan_Period_Mode parameter in the v1.1 specification. This parameter has no meaning in v1.2 or later and no default value.
2. This was the Page_Scan_Mode parameter in the v1.1 specification.

Bit 15	Reserved

7.7.3 Connection Complete Event

Event	Event Code	Event Parameters
Connection Complete	0x03	Status, Connection_Handle, BD_ADDR, Link_Type, Encryption_Enabled

Description:

The Connection Complete event indicates to both of the Hosts forming the connection that a new connection has been established. This event also indicates to the Host, which issued the Create Connection, or Accept_Connection_Request or Reject_Connection_Request command and then received a Command Status event, if the issued command failed or was successful.

Event Parameters:

Status: *Size: 1 Octet*

Value	Parameter Description
0x00	Connection successfully completed.
0x01-0xFF	Connection failed to Complete. See “Error Codes” on page 335 [Part D] for a list of error codes and descriptions.

Connection_Handle: *Size: 2 Octets (12 Bits meaningful)*

Value	Parameter Description
0xXXXX	Connection Handle to be used to identify a connection between two BR/EDR Controllers. The Connection Handle is used as an identifier for transmitting and receiving voice or data. Range: 0x0000-0x0EFF (0x0F00 - 0x0FFF Reserved for future use)

BD_ADDR: *Size: 6 Octets*

Value	Parameter Description
0xXXXXXXXXXXXX	BD_ADDR of the other connected Device forming the connection.

Link_Type: *Size: 1 Octet*

Value	Parameter Description
0x00	SCO connection.
0x01	ACL connection (Data Channels).
0x02-0xFF	Reserved for future use.

Encryption_Enabled: *Size: 1 Octet*

Value	Parameter Description
0x00	Link level encryption disabled.
0x01	Link level encryption enabled.
0x02-0xFF	Reserved for future use.

7.7.4 Connection Request Event

Event	Event Code	Event Parameters
Connection Request	0x04	BD_ADDR, Class_of_Device, Link_Type

Description:

The Connection Request event is used to indicate that a new incoming connection is trying to be established. The connection may either be accepted or rejected. If this event is masked away and there is an incoming connection attempt and the BR/EDR Controller is not set to auto-accept this connection attempt, the BR/EDR Controller will automatically refuse the connection attempt. When the Host receives this event and the link type parameter is ACL, it should respond with either an Accept_Connection_Request or Reject_Connection_Request command before the timer Conn_Accept_Timeout expires. If the link type is SCO or eSCO, the Host should reply with the Accept_Synchronous_Connection_ Request or the Reject_Synchronous_Connection_Request Command. If the link type is SCO, the host may respond with Accept_Connection_Request. If the Event is responded to with Accept_Connection_Request, then the default parameter settings of the Accept_Synchronous_Connection_Request (see Section 7.1.27 on page 477) should be used by the local LM when negotiating the SCO link parameters. In that case, the Connection_Complete Event and not the Synchronous_Connection_Complete Event, shall be returned on completion of the connection.

Event Parameters:

BD_ADDR: *Size: 6 Octets*

Value	Parameter Description
0xXXXXXXXXXXXX	BD_ADDR of the device that requests the connection.

Class_of_Device: *Size: 3 Octets*

Value	Parameter Description

0xXXXXXX	Class of Device for the device, which requests the connection.
0x000000	Unknown Class of Device

Link_Type: *Size: 1 Octet*

Value	Parameter Description
0x00	SCO Connection requested
0x01	ACL Connection requested
0x02	eSCO Connection requested
0x03-0xFF	Reserved for Future Use.

7.7.5 Disconnection Complete Event

Event	Event Code	Event Parameters
Disconnection Complete	0x05	Status, Connection_Handle, Reason

Description:

The Disconnection Complete event occurs when a connection is terminated. The status parameter indicates if the disconnection was successful or not. The reason parameter indicates the reason for the disconnection if the disconnection was successful. If the disconnection was not successful, the value of the reason parameter can be ignored by the Host. For example, this can be the case if the Host has issued the Disconnect command and there was a parameter error, or the command was not presently allowed, or a Connection Handle that didn't correspond to a connection was given.

Note: When a physical link fails, one Disconnection Complete event will be returned for each logical channel on the physical link with the corresponding Connection handle as a parameter.

Event Parameters:

Status: *Size: 1 Octet*

Value	Parameter Description
0x00	Disconnection has occurred.
0x01-0xFF	Disconnection failed to complete. See "Error Codes" on page 335 [Part D] for a list of error codes and descriptions.

Connection_Handle: *Size: 2 Octets (12 Bits meaningful)*

Value	Parameter Description

0xXXXX	Connection Handle which was disconnected. Range: 0x0000-0x0EFF (0x0F00 - 0x0FFF Reserved for future use)

Reason: *Size: 1 Octet*

Value	Parameter Description
0xXX	Reason for disconnection. See “Error Codes” on page 335 [Part D] for error codes and descriptions.

7.7.6 Authentication Complete Event

Event	Event Code	Event Parameters
Authentication Complete	0x06	Status, Connection_Handle

Description:

The Authentication Complete event occurs when authentication has been completed for the specified connection. The Connection_Handle must be a Connection_Handle for an ACL connection.

Event Parameters:

Status: *Size: 1 Octet*

Value	Parameter Description
0x00	Authentication Request successfully completed.
0x01-0xFF	Authentication Request failed to complete. See “Error Codes” on page 335 [Part D] for a list of error codes and descriptions.

Connection_Handle: *Size: 2 Octets (12 Bits meaningful)*

Value	Parameter Description
0xXXXX	Connection Handle for which Authentication has been performed. Range: 0x0000-0x0EFF (0x0F00 - 0x0FFF Reserved for future use)

7.7.7 Remote Name Request Complete Event

Event	Event Code	Event Parameters
Remote Name Request Complete	0x07	Status, BD_ADDR, Remote_Name

Description:

The Remote Name Request Complete event is used to indicate that a remote name request has been completed. The Remote_Name event parameter is a UTF-8 encoded string with up to 248 octets in length. The Remote_Name event parameter will be null-terminated (0x00) if the UTF-8 encoded string is less than 248 octets. The BD_ADDR event parameter is used to identify which device the user-friendly name was obtained from.

Note: The Remote_Name Parameter is a string parameter. Endian-ness does therefore not apply to the Remote_Name Parameter. The first octet of the name is received first.

Event Parameters:

Status: *Size: 1 Octet*

Value	Parameter Description
0x00	Remote_Name_Request command succeeded.
0x01-0xFF	Remote_Name_Request command failed. See “Error Codes” on page 335 [Part D] for a list of error codes and descriptions.

BD_ADDR: *Size: 6 Octets*

Value	Parameter Description
0xXXXXXXXXXXXX	BD_ADDR for the device whose name was requested.

Remote_Name: *Size: 248 Octets*

Value	Parameter Description
Name[248]	A UTF-8 encoded user-friendly descriptive name for the remote device. If the name contained in the parameter is shorter than 248 octets, the end of the name is indicated by a NULL octet (0x00), and the following octets (to fill up 248 octets, which is the length of the parameter) do not have valid values.

7.7.8 Encryption Change Event

Event	Event Code	Event Parameters
Encryption Change	0x08	Status, Connection_Handle, Encryption_Enabled

Description:

The Encryption Change event is used to indicate that the change of the encryption mode has been completed. The Connection_Handle will be a Connection_Handle for an ACL connection. The Encryption_Enable event parameter specifies the new Encryption Enabled for the Connection Handle specified by the Connection_Handle event parameter. This event will occur on both devices to notify the Hosts when Encryption has changed for the specified Connection Handle between two devices. Note that this event shall not be generated if encryption is paused or resumed; during a role switch, for example.

Event Parameters:

Status: *Size: 1 Octet*

Value	Parameter Description
0x00	Encryption Change has occurred.
0x01-0xFF	Encryption Change failed. See “Error Codes” on page 335 [Part D] for a list of error codes and descriptions.

Connection_Handle: *Size: 2 Octets (12 Bits meaningful)*

Value	Parameter Description
0xXXXX	Connection Handle for which the link layer encryption has been enabled/disabled for all Connection Handles with the same BR/EDR Controller endpoint as the specified Connection Handle. Range: 0x0000-0x0EFF (0x0F00 - 0x0FFF Reserved for future use)

Encryption_Enabled: *Size: 1 Octet*

Value	Parameter Description
0x00	Link Level Encryption is OFF.
0x01	Link Level Encryption is ON.
0x02-0xFF	Reserved.

7.7.9 Change Connection Link Key Complete Event

Event	Event Code	Event Parameters
Change Connection Link Key Complete	0x09	Status, Connection_Handle

Description:

The Change Connection Link Key Complete event is used to indicate that the change in the Link Key for the Connection Handle specified by the Connection_Handle event parameter has been completed.
The Connection_Handle will be a Connection_Handle for an ACL connection.
The Change Connection Link Key Complete event is sent only to the Host which issued the Change_Connection_Link_Key command.

Event Parameters:

Status: *Size: 1 Octet*

Value	Parameter Description
0x00	Change_Connection_Link_Key command succeeded.
0x01-0xFF	Change_Connection_Link_Key command failed. See "Error Codes" on page 335 [Part D] for a list of error codes and descriptions.

Connection_Handle: *Size: 2 Octets (12 Bits meaningful)*

Value	Parameter Description
0xXXXX	Connection Handle which the Link Key has been change for all Connection Handles with the same BR/EDR Controller end point as the specified Connection Handle. Range: 0x0000-0x0EFF (0x0F00 - 0x0FFF Reserved for future use)

7.7.10 Master Link Key Complete Event

Event	Event Code	Event Parameters
Master Link Key Complete	0x0A	Status, Connection_Handle, Key_Flag

Description:

The Master Link Key Complete event is used to indicate that the Link Key managed by the master of the piconet has been changed. The Connection_Handle will be a Connection_Handle for an ACL connection. The link key used for the connection will be the temporary link key of the master device or the semi-permanent link key indicated by the Key_Flag. The Key_Flag event parameter

is used to indicate which Link Key (temporary link key of the Master, or the semi-permanent link keys) is now being used in the piconet.

Note: for a master, the change from a semi-permanent Link Key to temporary Link Key will affect all Connection Handles related to the piconet. For a slave, this change affects only this particular Connection Handle. A temporary link key must be used when both broadcast and point-to-point traffic shall be encrypted.

Event Parameters:

Status: *Size: 1 Octet*

Value	Parameter Description
0x00	Master_Link_Key command succeeded.
0x01-0xFF	Master_Link_Key command failed. See “Error Codes” on page 335 [Part D] for a list of error codes and descriptions.

Connection_Handle: *Size: 2 Octets (12 Bits meaningful)*

Value	Parameter Description
0xXXXX	Connection Handle for which the Link Key has been changed for all devices in the same piconet. Range: 0x0000-0x0EFF (0x0F00 - 0x0FFF Reserved for future use)

Key_Flag: *Size: 1 Octet*

Value	Parameter Description
0x00	Using Semi-permanent Link Key.
0x01	Using Temporary Link Key.

7.7.11 Read Remote Supported Features Complete Event

Event	Event Code	Event Parameters
Read Remote Supported Features Complete	0x0B	Status, Connection_Handle, LMP_Features

Description:

The Read Remote Supported Features Complete event is used to indicate the completion of the process of the Link Manager obtaining the supported features of the remote BR/EDR Controller specified by the Connection_Handle event parameter. The Connection_Handle will be a Connection_Handle for an ACL connection. The event parameters include a list of LMP features. For details see “Link Manager Protocol Specification” on page 205[vol. 2].

Event Parameters:

Status: *Size: 1 Octet*

Value	Parameter Description
0x00	Read_Remote_Supported_Features command succeeded.
0x01-0xFF	Read_Remote_Supported_Features command failed. See "Error Codes" on page 335 [Part D] for a list of error codes and descriptions.

Connection_Handle: *Size: 2 Octets (12 Bits meaningful)*

Value	Parameter Description
0xXXXX	Connection Handle which is used for the Read_Remote_Supported_Features command. Range: 0x0000-0x0EFF (0x0F00 - 0x0FFF Reserved for future use)

LMP_Features: *Size: 8 Octets*

Value	Parameter Description
0xXXXXXXXX XXXXXXXX	Bit Mask List of LMP features. See "Link Manager Protocol Specification" on page 205 [Part C].

7.7.12 Read Remote Version Information Complete Event

Event	Event Code	Event Parameters
Read Remote Version Information Complete	0x0C	Status, Connection_Handle, LMP_Version, Manufacturer_Name, LMP_Subversion

Description:

The Read Remote Version Information Complete event is used to indicate the completion of the process of the Link Manager obtaining the version information of the remote BR/EDR Controller specified by the Connection_Handle event parameter. The Connection_Handle is for an ACL connection. The LMP_Version event parameter defines the specification version of the BR/EDR Controller. The Manufacturer_Name event parameter indicates the manufacturer of the remote BR/EDR Controller. The LMP_Subversion event parameter is controlled by the manufacturer and is implementation dependant. The LMP_Subversion event parameter defines the various revisions that each version of the Bluetooth hardware will go through as design processes change and errors are fixed. This allows the software to determine what Bluetooth hardware is being used and, if necessary, to work around various bugs in the hardware.

Event Parameters:

Status: *Size: 1 Octet*

Value	Parameter Description
0x00	Read_Remote_Version_Information command succeeded.
0x01-0xFF	Read_Remote_Version_Information command failed. See "Error Codes" on page 335 [Part D] for a list of error codes and descriptions.

Connection_Handle: *Size: 2 Octets (12 Bits meaningful)*

Value	Parameter Description
0xXXXX	Connection Handle which is used for the Read_Remote_Version_Information command. Range: 0x0000-0x0EFF (0x0F00 - 0x0FFF Reserved for future use)

LMP_Version: *Size: 1 Octet*

Value	Parameter Description
0xXX	Version of the Current LMP in the remote BR/EDR Controller. For LMP_Version information, see Bluetooth Assigned Numbers.

Manufacturer_Name: *Size: 2 Octets*

Value	Parameter Description
0xXXXX	Manufacturer Name of the remote BR/EDR Controller, see Table 5.2 on page 317 in the Link Manager Protocol for assigned values (CompId).

LMP_Subversion: *Size: 2 Octets*

Value	Parameter Description
0xXXXX	Subversion of the Current LMP in the remote BR/EDR Controller, see Table 5.2 on page 317 in the Link Manager Protocol for assigned values (SubVersNr).

7.7.13 QoS Setup Complete Event

Event	Event Code	Event Parameters

QoS Setup Complete	0x0D	Status, Connection_Handle, Flags, Service_Type, Token_Rate, Peak_Bandwidth, Latency, Delay_Variation

Description:

The QoS Setup Complete event is used to indicate the completion of the process of the Link Manager setting up QoS with the remote BR/EDR Controller specified by the Connection_Handle event parameter. The Connection_Handle will be a Connection_Handle for an ACL connection. For more detail see
“Logical Link Control and Adaptation Protocol Specification” on page 19[vol. 3].

Event Parameters:

Status: *Size: 1 Octet*

Value	Parameter Description
0x00	QoS_Setup command succeeded.
0x01-0xFF	QoS_Setup command failed. See “Error Codes” on page 335 [Part D] for a list of error codes and descriptions.

Connection_Handle: *Size: 2 Octets (12 Bits meaningful)*

Value	Parameter Description
0xXXXX	Connection Handle which is used for the QoS_Setup command. Range: 0x0000-0x0EFF (0x0F00 - 0x0FFF Reserved for future use)

Flags: *Size: 1 Octet*

Value	Parameter Description
0x00 – 0xFF	Reserved for Future Use.

Service_Type: *Size: 1 Octet*

Value	Parameter Description
0x00	No Traffic Available.
0x01	Best Effort Available.
0x02	Guaranteed Available.
0x03-0xFF	Reserved for Future Use.

Token_Rate: *Size: 4 Octets*

Value	Parameter Description
0xXXXXXXXX	Available Token Rate, in octets per second.

Peak_Bandwidth: *Size: 4 Octets*

Value	Parameter Description
0xXXXXXXXX	Available Peak Bandwidth, in octets per second.

Latency: *Size: 4 Octets*

Value	Parameter Description
0xXXXXXXXX	Available Latency, in microseconds.

Delay_Variation: *Size: 4 Octets*

Value	Parameter Description
0xXXXXXXXX	Available Delay Variation, in microseconds.

7.7.14 Command Complete Event

Event	Event Code	Event Parameters
Command Complete	0x0E	Num_HCI_Command_Packets, Command_Opcode, Return_Parameters

Description:

The Command Complete event is used by the Controller for most commands to transmit return status of a command and the other event parameters that are specified for the issued HCI command.

The Num_HCI_Command_Packets event parameter allows the Controller to indicate the number of HCI command packets the Host can send to the Controller. If the Controller requires the Host to stop sending commands, the Num_HCI_Command_Packets event parameter will be set to zero. To indicate to the Host that the Controller is ready to receive HCI command packets, the Controller generates a Command Complete event with the Command_Opcode 0x0000, and the Num_HCI_Command_Packets event parameter is set to 1 or more. Command_Opcode, 0x0000 is a NOP (No OPeration), and can be used to change the number of outstanding HCI command packets that the Host can send before waiting. See each command for the parameters that are returned by this event.

Event Parameters:

Num_HCI_Command_Packets: *Size: 1 Octet*

Value	Parameter Description
N = 0xXX	The Number of HCI command packets which are allowed to be sent to the Controller from the Host. Range for N: 0 – 255

Command_Opcode: *Size: 2 Octets*

Value	Parameter Description
0xXXXX	Opcode of the command which caused this event.

Return_Parameter(s): *Size: Depends on Command*

Value	Parameter Description
0xXX	This is the return parameter(s) for the command specified in the Command_Opcode event parameter. See each command's definition for the list of return parameters associated with that command.

7.7.15 Command Status Event

Event	Event Code	Event Parameters
Command Status	0x0F	Status, Num_HCI_Command_Packets, Command_Opcode

Description:

The Command Status event is used to indicate that the command described by the Command_Opcode parameter has been received, and that the Controller is currently performing the task for this command. This event is needed to provide mechanisms for asynchronous operation, which makes it possible to prevent the Host from waiting for a command to finish. If the command can not begin to execute (a parameter error may have occurred, or the command may currently not be allowed), the Status event parameter will contain the corresponding error code, and no complete event will follow since the command was not started. The Num_HCI_Command_Packets event parameter allows the Controller to indicate the number of HCI command packets the Host can send to the Controller. If the Controller requires the Host to stop sending commands, the Num_HCI_Command_Packets event parameter will be set to zero. To indicate to the Host that the Controller is ready to receive HCI command packets, the Controller generates a Command Status event with Status 0x00 and Command_Opcode 0x0000, and the Num_HCI_Command_Packets event parameter is set to 1 or more. Command_Opcode, 0x0000 is a NOP (No OPeration) and can be used to change the number of outstanding HCI command packets that the Host can send before waiting.

Event Parameters:

Status: *Size: 1 Octet*

Value	Parameter Description
0x00	Command currently in pending.
0x01-0xFF	Command failed. See “Error Codes” on page 335 [Part D] for a list of error codes and descriptions.

Num_HCI_Command_Packets: *Size: 1 Octet*

Value	Parameter Description
N = 0xXX	The Number of HCI command packets which are allowed to be sent to the Controller from the Host. Range for N: 0 – 255

Command_Opcode: *Size: 2 Octets*

Value	Parameter Description

0xXXXX	Opcode of the command which caused this event and is pending completion.

7.7.16 Hardware Error Event

Event	Event Code	Event Parameters
Hardware Error	0x10	Hardware_Code

Description:

The Hardware Error event is used to indicate some type of hardware failure for the BR/EDR Controller. This event is used to notify the Host that a hardware failure has occurred in the Controller.

Event Parameters:

Hardware_Code: *Size: 1 Octet*

Value	Parameter Description
0x00-0xFF	These Hardware_Codes will be implementation-specific, and can be assigned to indicate various hardware problems.

7.7.17 Flush Occurred Event

Event	Event Code	Event Parameters
Flush Occurred	0x11	Handle

Description:

The Flush Occurred event is used to indicate that, for the specified Handle, the current user data to be transmitted has been removed. The Handle will be a Connection_Handle for a ER/BDR ACL connection and a Logical_Link_Handle for an AMP ACL connection. This could result from the flush command, or be due to the automatic flush. Multiple blocks of an L2CAP packet could have been pending in the Controller. If one baseband packet part of an L2CAP PDU is flushed, then the rest of the HCI data packets for the L2CAP PDU must also be flushed.

Event Parameters:

Handle: *Size: 2 Octets (12 Bits meaningful)*

Value	Parameter Description
0xXXXX	Handle that was flushed. The Handle is a Connection Handle for a BR/EDR Controller and a Logical Link Handle for an AMP Controller. Range: 0x0000-0x0EFF (0x0F00 - 0x0FFF Reserved for future use)

7.7.18 Role Change Event

Event	Event Code	Event Parameters
Role Change	0x12	Status, BD_ADDR, New_Role

Description:

The Role Change event is used to indicate that the current role of the BR/EDR Controller related to the particular connection has changed. This event only occurs when both the remote and local BR/EDR Controllers have completed their role change for the BR/EDR Controller associated with the BD_ADDR event parameter. This event allows both affected Hosts to be notified when the Role has been changed.

Event Parameters:

Status: *Size: 1 Octet*

Value	Parameter Description
0x00	Role change has occurred.
0x01-0xFF	Role change failed. See "Error Codes" on page 335 [Part D] for a list of error codes and descriptions.

BD_ADDR: *Size: 6 Octets*

Value	Parameter Description
0xXXXXXXXXXXXX	BD_ADDR of the Device for which a role change has completed.

New_Role: *Size: 1 Octet*

Value	Parameter Description
0x00	Currently the Master for specified BD_ADDR.
0x01	Currently the Slave for specified BD_ADDR.

7.7.19 Number Of Completed Packets Event

Event	Event Code	Event Parameters
Number Of Completed Packets	0x13	Number_of_Handles, Connection_Handle[i], HC_Num_Of_Completed_Packets[i]

Description:

The Number Of Completed Packets event is used by the Controller to indicate to the Host how many HCI Data Packets have been completed (transmitted or flushed) for each Connection Handle since the previous Number Of Completed Packets event was sent to the Host. This means that the corresponding buffer space has been freed in the Controller. Based on this information, and the HC_Total_Num_ACL_Data_Packets and HC_Total_Num_Synchronous_Data_Packets return parameter of the Read_Buffer_Size command, the Host can determine for which Connection Handles the following HCI Data Packets should be sent to the Controller. The Number Of Completed Packets event must not be sent before the corresponding Connection Complete event. While the Controller has HCI data packets in its buffer, it must keep sending the Number Of Completed Packets event to the Host at least periodically, until it finally reports that all the pending ACL Data Packets have been transmitted or flushed. The rate with which this event is sent is manufacturer specific.
Note that Number Of Completed Packets events will not report on synchronous Connection Handles if synchronous Flow Control is disabled. (See Read/Write_Synchronous_Flow_Control_Enable on page 570 and page 571.)

Event Parameters:

Number_of_Handles: *Size: 1 Octet*

Value	Parameter Description
0xXX	The number of Connection Handles and Num_HCI_Data_Packets parameters pairs contained in this event. Range: 0-255

*Connection_Handle[i]: Size: Number_of_Handles * 2 Octets(12 Bits meaningful)*

Value	Parameter Description
0xXXXX	Connection Handle. Range: 0x0000-0x0EFF (0x0F00 - 0x0FFF Reserved for future use)

*HC_Num_Of_Completed_Packets [i]: Size: Number_of_Handles * 2 Octets*

Value	Parameter Description
N = 0xXXXX	The number of HCI Data Packets that have been completed (transmitted or flushed) for the associated Connection Handle since the previous time the event was returned. Range for N: 0x0000-0xFFFF

7.7.20 Mode Change Event

Event	Event Code	Event Parameters
Mode Change	0x14	Status, Connection_Handle, Current_Mode, Interval

Description:

The Mode Change event is used to indicate when the device associated with the Connection Handle changes between Active mode, Hold mode, and Sniff mode, and Park state. The Connection_Handle will be a Connection_Handle for an ACL connection. The Connection_Handle event parameter is used to indicate which connection the Mode Change event is for. The Current_Mode event parameter is used to indicate which state the connection is currently in. The Interval parameter is used to specify a time amount specific to each state. Each Controller that is associated with the Connection Handle which has changed Modes will send the Mode Change event to its Host.

Event Parameters:

Status: *Size: 1 Octet*

Value	Parameter Description
0x00	A Mode Change has occurred.
0x01-0xFF	Hold_Mode, Sniff_Mode, Exit_Sniff_Mode, Park_State, or Exit_Park_State command failed. See “Error Codes” on page 335 [Part D] for a list of error codes and descriptions.

Connection_Handle: *Size: 2 Octets(12 Bits meaningful)*

Value	Parameter Description
0xXXXX	Connection Handle. Range: 0x0000-0x0EFF (0x0F00 - 0x0FFF Reserved for future use)

Current_Mode: *Size: 1 Octet*

Value	Parameter Description
0x00	Active Mode.
0x01	Hold Mode.
0x02	Sniff Mode.
0x03	Park State.
0x04-0xFF	Reserved for future use.

Interval: *Size: 2 Octets*

Value	Parameter Description
N = 0xXXXX	Hold: Number of Baseband slots to wait in Hold Mode. Hold Interval = N * 0.625 msec (1 Baseband slot) Range for N: 0x0002-0xFFFE Time Range: 1.25 msec-40.9 sec Sniff: Number of Baseband slots between sniff intervals. Time between sniff intervals = 0.625 msec (1 Baseband slot) Range for N: 0x0002-0xFFFE Time Range: 1.25 msec-40.9 sec Park: Number of Baseband slots between consecutive beacons. Interval Length = N * 0.625 msec (1 Baseband slot) Range for N: 0x0002-0xFFFE Time Range: 1.25 msec-40.9 Seconds

7.7.21 Return Link Keys Event

Event	Event Code	Event Parameters
Return Link Keys	0x15	Num_Keys, BD_ADDR [i], Link_Key[i]

Description:

The Return Link Keys event is used by the BR/EDR Controller to send the Host one or more stored Link Keys. Zero or more instances of this event will occur after the Read_Stored_Link_Key command. When there are no link keys stored, no Return Link Keys events will be returned. When there are link keys stored, the number of link keys returned in each Return Link Keys event is implementation specific. This event shall never return the value of the link keys. The link keys value parameter shall always contain the value of zero.

Event Parameters:

Num_Keys: *Size: 1 Octet*

Value	Parameter Description
0xXX	Number of Link Keys contained in this event. Range: 0x01 – 0x0B

BD_ADDR [i]: *Size: 6 Octets * Num_Keys*

Value	Parameter Description
0xXXXXXXXXXXXX	BD_ADDR for the associated Link Key.

Link_Key[i]: *Size:16 Octets * Num_Keys*

Value	Parameter Description
0xXXXXXXXXXX XXXXXXXXXX XXXXXXXXXX	Link Key for the associated BD_ADDR.

7.7.22 PIN Code Request Event

Event	Event Code	Event Parameters
PIN Code Request	0x16	BD_ADDR

Description:

The PIN Code Request event is used to indicate that a PIN code is required to create a new link key. The Host must respond using either the PIN Code Request Reply or the PIN Code Request Negative Reply command, depending on whether the Host can provide the Controller with a PIN code or not.

Note: If the PIN Code Request event is masked away, then the BR/EDR Controller will assume that the Host has no PIN Code.

When the BR/EDR Controller generates a PIN Code Request event in order for the local Link Manager to respond to the request from the remote Link Manager (as a result of a Create_Connection or Authentication_Requested command from the remote Host), the local Host must respond with either a PIN_Code_Request_Reply or PIN_Code_Request_Negative_Reply command before the remote Link Manager detects LMP response timeout. (See “Link Manager Protocol Specification” on page 205 [Part C].)

Event Parameters:

BD_ADDR: *Size: 6 Octets*

Value	Parameter Description
0xXXXXXXXXXXXX	BD_ADDR of the Device which a new link key is being created for.

7.7.23 Link Key Request Event

Event	Event Code	Event Parameters
Link Key Request	0x17	BD_ADDR

Description:

The Link Key Request event is used to indicate that a Link Key is required for the connection with the device specified in BD_ADDR. If the Host has the requested stored Link Key, then the Host will pass the requested Key to the Controller using the Link_Key_Request_Reply Command. If the Host does not have the requested stored Link Key, or the stored Link Key does not meet the security requirements for the requested service, then the Host will use the Link_Key_Request_Negative_Reply Command to indicate to the Controller that the Host does not have the requested key.

Note: If the Link Key Request event is masked away, then the BR/EDR Controller will assume that the Host has no additional link keys.

If the Host uses the Link_Key_Request_Negative_Reply Command when the requested service requires an authenticated Link Key and the current Link Key is unauthenticated, the Host should set the Authentication_Requirements parameter one of the to MITM Protection Required options.

When the Controller generates a Link Key Request event in order for the local Link Manager to respond to the request from the remote Link Manager (as a result of a Create_Connection or Authentication_Requested command from the remote Host), the local Host must respond with either a Link_Key_Request_Reply or Link_Key_Request_Negative_Reply command before the remote Link Manager detects LMP response timeout. (See “Link Manager Protocol Specification” on page 205 [Part C].)

Event Parameters:

BD_ADDR: *Size: 6 Octets*

Value	Parameter Description
0xXXXXXXXXXXXX	BD_ADDR of the Device which a stored link key is being requested.

7.7.24 Link Key Notification Event

Event	Event Code	Event Parameters
Link Key Notification	0x18	BD_ADDR, Link_Key, Key_Type

Description:

The Link Key Notification event is used to indicate to the Host that a new Link Key has been created for the connection with the device specified in BD_ADDR. The Host can save this new Link Key in its own storage for future use. Also, the Host can decided to store the Link Key in the BR/EDR Controller's Link Key Storage by using the Write_Stored_Link_Key command. The Key_Type event parameter informs the Host about which key type (combination key, local unit key, or remote unit key, debug combination key, unauthenticated combination key, authenticated combination key or changed combination key) that was used during pairing. If pairing with unit key is not supported, the Host can for instance discard the key or disconnect the link.

The combination key Key_Type is used when standard pairing was used. The debug combination key Key_Type is used when Simple Pairing was used and the debug public key is sent or received. The unauthenticated combination key Key_Type is used when the Just Works Simple Pairing association model was used. The authenticated combination key Key_Type is used when Simple Pairing was used and the Just Works association mode was not used. The changed combination key Key_Type is used when the link key has been changed using the Change Connection Link Key procedure and Simple Pairing Mode is set to enabled. Note: it is the responsibility of the Host to remember whether the combination key was a debug, unauthenticated or authenticated Key_Type prior to changing the link key.

Event Parameters:

BD_ADDR: *Size: 6 Octets*

Value	Parameter Description
0xXXXXXXXXXXXX	BD_ADDR of the Device for which the new link key has been generated.

Link_Key: *Size: 16 Octets*

Value	Parameter Description
0xXXXXXXXXXXXXXXXXXXXXXXXXXXXX	Link Key for the associated BD_ADDR.

Key_Type: *Size: 1 Octet*

Value	Parameter Description
0x00	Combination Key
0x01	Local Unit Key
0x02	Remote Unit Key
0x03	Debug Combination Key
0x04	Unauthenticated Combination Key
0x05	Authenticated Combination Key
0x06	Changed Combination Key
0x07-0xFF	Reserved

7.7.25 Loopback Command Event

Event	Event Code	Event Parameters
Loopback Command	0x19	HCI_Command_Packet

Description:

When in Local Loopback mode, the BR/EDR Controller loops back commands and data to the Host. The Loopback Command event is used to loop back all commands that the Host sends to the Controller with some exceptions. See section 7.6.1, “Read Loopback Mode Command,” on page 644 for a description of which commands that are not looped back. The HCI_Command_Packet event parameter contains the entire HCI Command Packet including the header.

Note: the event packet is limited to a maximum of 255 octets in the payload; since an HCI Command Packet has 3 octets of header data, only the first 252 octets of the command parameters will be returned.

Event Parameters:

HCI_Command_Packet: *Size: Depends on Command*

Value	Parameter Description
0xXXXXXX	HCI Command Packet, including header.

7.7.26 Data Buffer Overflow Event

Event	Event Code	Event Parameters
Data Buffer Overflow	0x1A	Link_Type

Description:

This event is used to indicate that the Controller's data buffers have been overflowed. This can occur if the Host has sent more packets than allowed. The Link_Type parameter is used to indicate that the overflow was caused by ACL or synchronous data.

Event Parameters:

Link_Type: *Size: 1 Octet*

Value	Parameter Description
0x00	Synchronous Buffer Overflow (Voice Channels).
0x01	ACL Buffer Overflow (Data Channels).
0x02-0xFF	Reserved for Future Use.

7.7.27 Max Slots Change Event

Event	Event Code	Event Parameters
Max Slots Change	0x1B	Connection_Handle, LMP_Max_Slots

Description:

This event is used to notify the Host about the LMP_Max_Slots parameter when the value of this parameter changes. It will be sent each time the maximum allowed length, in number of slots, for baseband packets transmitted by the local device, changes. The Connection_Handle will be a Connection_Handle for an ACL connection.

Event Parameters:

Connection_Handle: *Size: 2 Octets (12 Bits meaningful)*

Value	Parameter Description
0xXXXX	Connection Handle. Range: 0x0000-0x0EFF (0x0F00 - 0x0FFF Reserved for future use)

LMP_Max_Slots: *Size: 1 octet*

Value	Parameter Description
0x01, 0x03, 0x05	Maximum number of slots allowed to use for baseband packets, see Section 4.1.10 on page 241 and Section 5.2 on page 317 in "Link Manager Protocol Specification" on page 205 [Part C].

7.7.28 Read Clock Offset Complete Event

Event	Event Code	Event Parameters
Read Clock Offset Complete	0x1C	Status, Connection_Handle, Clock_Offset

Description:

The Read Clock Offset Complete event is used to indicate the completion of the process of the Link Manager obtaining the Clock Offset information of the BR/EDR Controller specified by the Connection_Handle event parameter. The Connection_Handle will be a Connection_Handle for an ACL connection.

Event Parameters:

Status: *Size: 1 Octet*

Value	Parameter Description
0x00	Read_Clock_Offset command succeeded.
0x01-0xFF	Read_Clock_Offset command failed. See "Error Codes" on page 335 [Part D] for a list of error codes and descriptions.

Connection_Handle: *Size: 2 Octets (12 bits meaningful)*

Value	Parameter Description
0xXXXX	Specifies which Connection Handle's Clock Offset parameter is returned. Range: 0x0000-0x0EFF (0x0F00 - 0x0FFF Reserved for future use)

Clock_Offset: *Size: 2 Octets*

Bit format	Parameter Description
Bit 14-0	Bit 16-2 of CLKslave-CLKmaster.
Bit 15	Reserved.

7.7.29 Connection Packet Type Changed Event

Event	Event Code	Event Parameters
Connection Packet Type Changed	0x1D	Status, Connection_Handle, Packet_Type

Description:

The Connection Packet Type Changed event is used to indicate that the process has completed of the Link Manager changing which packet types can be used for the connection. This allows current connections to be dynamically modified to support different types of user data. The Packet_Type event parameter specifies which packet types the Link Manager can use for the connection identified by the Connection_Handle event parameter for sending L2CAP data or voice. The Packet_Type event parameter does not decide which packet types the LM is allowed to use for sending LMP PDUs.

Event Parameters:

Status: *Size: 1 Octet*

Value	Parameter Description
0x00	Connection Packet Type changed successfully.
0x01-0xFF	Connection Packet Type Changed failed. See "Error Codes" on page 335 [Part D] for a list of error codes and descriptions.

Connection_Handle: *Size: 2 Octets (12 Bits meaningful)*

Value	Parameter Description
0xXXXX	Connection Handle. Range: 0x0000-0x0EFF (0x0F00 - 0x0FFF Reserved for future use)

Packet_Type: *Size: 2 Octets*

For ACL_Link_Type

Value	Parameter Description
0x0001	Reserved for future use.
0x0002	2-DH1 may not be used.
0x0004	3-DH1 may not be used.
0x0008[1]	DM1 may be used.
0x0010	DH1 may be used.
0x0020	Reserved for future use.
0x0040	Reserved for future use.
0x0080	Reserved for future use.

0x0100	2-DH3 may not be used.
0x0200	3-DH3 may not be used.
0x0400	DM3 may be used.
0x0800	DH3 may be used.
0x1000	2-DH5 may not be used.
0x2000	3-DH5 may not be used.
0x4000	DM5 may be used.
0x8000	DH5 may be used.

1. This bit will be interpreted as set to 1 by Bluetooth V1.2 or later controllers.

For SCO_Link_Type

Value	Parameter Description
0x0001	Reserved for future use.
0x0002	Reserved for future use.
0x0004	Reserved for future use.
0x0008	Reserved for future use.
0x0010	Reserved for future use.
0x0020	HV1
0x0040	HV2
0x0080	HV3
0x0100	Reserved for future use.
0x0200	Reserved for future use.
0x0400	Reserved for future use.
0x0800	Reserved for future use.
0x1000	Reserved for future use.
0x2000	Reserved for future use.
0x4000	Reserved for future use.
0x8000	Reserved for future use.

7.7.30 QoS Violation Event

Event	Event Code	Event Parameters
QoS Violation	0x1E	Handle

Description:

The QoS Violation event is used to indicate the Controller is unable to provide the current QoS requirement for the Connection or Logical Link Handle. This event indicates that the Controller is unable to provide one or more of the agreed QoS parameters.

The Host chooses what action should be done. With a BR/EDR Controller the Host can reissue the QoS_Setup command to renegotiate the QoS setting for Connection Handle. With an AMP Controller the Host can reissue the Flow_Spec_Modify command.

Event Parameters:

Handle: *Size: 2 Octets (12 Bits meaningful)*

Value	Parameter Description
0xXXXX	Handle for the link that the Controller cannot provide the current QoS requested. The Handle is a Connection Handle for a BR/EDR Controller and a Logical Link Handle for an AMP Controller. Range: 0x0000-0x0EFF (0x0F00 - 0x0FFF Reserved for future use)

7.7.31 Page Scan Repetition Mode Change Event

Event	Event Code	Event Parameters
Page Scan Repetition Mode Change	0x20	BD_ADDR, Page_Scan_Repetition_Mode

Description:

The Page Scan Repetition Mode Change event indicates that the remote BR/EDR Controller with the specified BD_ADDR has successfully changed the Page_Scan_Repetition_Mode (SR).

Event Parameters:

BD_ADDR: *Size: 6 Octets*

Value	Parameter Description
0xXXXXXXXXXXXX	BD_ADDR of the remote device.

Page_Scan_Repetition_Mode: *Size: 1 Octet*

Value	Parameter Description
0x00	R0
0x01	R1
0x02	R2
0x03 – 0xFF	Reserved.

7.7.32 Flow Specification Complete Event

Event	Event Code	Event Parameters
HCI Flow Specification Complete	0x21	Status, Connection_Handle, Flags, Flow_direction, Service_Type, Token_Rate, Token_Bucket_Size, Peak_Bandwidth, Access Latency

Description:

The Flow Specification Complete event is used to inform the Host about the Quality of Service for the ACL connection the Controller is able to support. The Connection_Handle will be a Connection_Handle for an ACL connection. The flow parameters refer to the outgoing or incoming traffic of the ACL link, as indicated by the Flow_direction field. The flow parameters are defined in the L2CAP specification “Quality of Service (QoS) Option” on page 75[vol. 3]. When the Status parameter indicates a successful completion, the flow parameters specify the agreed values by the Controller. When the Status parameter indicates a failed completion with the Error Code *QoS Unacceptable Parameters* (0x2C), the flow parameters specify the acceptable values of the Controller. This enables the Host to continue the 'QoS negotiation' with a new HCI Flow_Specification command with flow parameter values that are acceptable for the Controller. When the Status parameter indicates a failed completion with the Error Code *QoS Rejected* (0x2D), this indicates a request of the Controller to discontinue the 'QoS negotiation'. When the Status parameter indicates a failed completion, the flow parameter values of the most recently successful completion must be assumed (or the default values when there was no success completion).

Event Parameters:

Status: *Size: 1 Octet*

Value	Parameter Description
0x00	Flow Specification command succeeded
0x01 – 0xFF	Flow Specification command failed. See “Error Codes” on page 335 [Part D] for list of Error Codes

Connection_Handle: *Size: 2 Octets (12 Bits meaningful)*

Value	Parameter Description
0xXXXX	Connection Handle used to identify for which ACL connection the Flow is specified. Range: 0x0000 - 0x0EFF (0x0F00 – 0x0FFF Reserved for future use)

Flags: *Size: 1 Octet)*

Value	Parameter Description
0x00 – 0xFF	Reserved for Future Use.

Flow_direction: *Size: 1 Octet*

Value	Parameter Description
0x00	Outgoing Flow i.e. traffic send over the ACL connection
0x01	Incoming Flow i.e. traffic received over the ACL connection
0x02 – 0xFF	Reserved for Future Use.

Service_Type: *Size: 1 Octet*

Value	Parameter Description
0x00	No Traffic
0x01	Best Effort
0x02	Guaranteed
0x03 – 0xFF	Reserved for Future Use

Token Rate: *Size: 4 Octets*

Value	Parameter Description
0xXXXXXXXX	Token Rate in octets per second

Token Bucket Size 4 Octets

Value	Parameter Description
0xXXXXXXXX	Token Bucket Size in octets

Peak_Bandwidth: *Size: 4 Octets*

Value	Parameter Description
0xXXXXXXXX	Peak Bandwidth in octets per second

Access Latency: *Size: 4 Octets*

Value	Parameter Description
0xXXXXXXXX	Access Latency in microseconds

7.7.33 Inquiry Result with RSSI Event

Event	Event Code	Event Parameters
Inquiry Result with RSSI	0x22	Num_responses, BD_ADDR[i], Page_Scan_Repetition_Mode[i], Reserved[i], Class_of_Device[i], Clock_Offset[i], RSSI[i]

Description:

The Inquiry Result with RSSI event indicates that a BR/EDR Controller or multiple BR/EDR Controllers have responded so far during the current Inquiry process. This event will be sent from the BR/EDR Controller to the Host as soon as an Inquiry Response from a remote device is received if the remote device supports only mandatory paging scheme. This BR/EDR Controller may queue these Inquiry Responses and send multiple BR/EDR Controllers information in one Inquiry Result event. The event can be used to return one or more Inquiry responses in one event. The RSSI parameter is measured during the FHS packet returned by each responding slave.

This event shall only be generated if the Inquiry Mode parameter of the last Write_Inquiry_Mode command was set to 0x01 (Inquiry Result format with RSSI).

Event Parameters:

Num_Responses: *Size: 1 Octet*

Value	Parameter Description
0xXX	Number of responses from the Inquiry.

BD_ADDR[i]: *Size: 6 Octets * Num_Responses*

Value	Parameter Description
0xXXXXXXXXXXXX	BD_ADDR for each device which responded.

Page_Scan_Repetition_Mode[i]: *Size: 1 Octet* Num_Responses*

Value	Parameter Description
0x00	R0
0x01	R1
0x02	R2

0x03 – 0xFF	Reserved

Reserved[i]:[1] *Size: 1 Octet* Num_Responses*

Value	Parameter Description
0xXX	Reserved.

Class_of_Device[i]: *Size: 3 Octets * Num_Responses*

Value	Parameter Description
0xXXXXXX	Class of Device for the device

Clock_Offset[i]: *Size: 2 Octets * Num_Responses*

Bit format	Parameter Description
Bit 14-0	Bit 16-2 of CLKslave-CLKmaster.
Bit 15	Reserved

RSSI[i]: *Size: 1 Octet * Num_Responses*

Value	Parameter Description
0xXX	Range: -127 to +20 Units: dBm

1. This was the Page_Scan_Period_Mode parameter in the v1.1 specification. This parameter has no meaning in v1.2 or later and no default value.

7.7.34 Read Remote Extended Features Complete Event

Event	Event Code	Event Parameters
Read Remote Extended Features Complete	0x23	Status, Connection_Handle, Page_Number, Maximum page number, Extended_LMP_Features

Description:

The Read Remote Extended Features Complete event is used to indicate the completion of the process of the Link Manager obtaining the remote extended LMP features of the remote device specified by the Connection Handle event parameter. The Connection Handle will be a Connection Handle for an ACL connection. The event parameters include a page of the remote devices extended LMP features. For details see "Link Manager Protocol Specification" on page 205 [Part C].

Event Parameters:

Status: *Size: 1 Octet*

Value	Parameter Description
0x00	Request for remote extended features succeeded
0x01-0xFF	Request for remote extended features failed – standard HCI error value

Connection_Handle: *Size: 2 Octets (12 Bits meaningful)*

Value	Parameter Description
0xXXXX	The Connection Handle identifying the device to which the remote features apply. Range: 0x0000-0x0EFF (0x0F00-0x0FFF Reserved for future use)

Page Number: *Size: 1Octet*

Value	Parameter Description
0x00	The normal LMP features as returned by HCI_Read_Remote_Supported_Features
0x01-0xFF	The page number of the features returned

Maximum Page Number: *Size: 1Octet*

Value	Parameter Description
0x00-0xFF	The highest features page number which contains non-zero bits for the local device

Extended_LMP_Features: *Size: 8 Octets*

Value	Parameter Description
0xFFFFFFFFFFFFFFFF	Bit map of requested page of LMP features. See LMP specification for details

7.7.35 Synchronous Connection Complete Event

Event	Event Code	Event Parameters
Synchronous Connection Complete	0x2C	Status, Connection_Handle, BD_ADDR, Link Type, Transmission_Interval, Retransmission Window, Rx_Packet_Length, Tx_Packet_Length Air Mode

Description:

The Synchronous Connection Complete event indicates to both the Hosts that a new Synchronous connection has been established. This event also indicates to the Host, which issued the Setup_Synchronous_Connection, or Accept_Synchronous_Connection_Request or Reject_Synchronous_Connection_Request command and then received a Command Status event, if the issued command failed or was successful.

Event Parameters:

Status: *Size: 1 Octet*

Value	Parameter Description
0x00	Connection successfully completed.
0x01 –0xFF	Connection failed to complete. See “Error Codes” on page 335 [Part D] for error codes and descriptions.

Connection_Handle: *Size: 2 Octets (12 Bits meaningful)*

Value	Parameter Description
0xXXXX	Connection Handle to be used to identify a connection between two BR/EDR Controllers. Range: 0x0000-0x0EFF (0x0F00 – 0x0FFF Reserved for future use)

BD_ADDR: *Size: 6 Octets*

Value	Parameter Description
0xXXXXXXXXXXXX	BD_ADDR of the other connected device forming the connection.

Link_Type: *Size: 1 Octet*

Value	Parameter Description
0x00	SCO Connection
0x01	Reserved
0x02	eSCO Connection
0x03 – 0xFF	Reserved

Transmission_Interval: *Size: 1 Octet*

Value	Parameter Description
0xXX	Time between two consecutive eSCO instants measured in slots. Must be zero for SCO links.

Retransmission window: *Size: 1 Octet*

Value	Parameter Description
0xXX	The size of the retransmission window measured in slots. Must be zero for SCO links.

Rx_Packet_Length: *Size: 2 Octets*

Value	Parameter Description
0xXXXX	Length in bytes of the eSCO payload in the receive direction. Must be zero for SCO links.

Tx_Packet_Length: *Size: 2 Octets*

Value	Parameter Description
0xXXXX	Length in bytes of the eSCO payload in the transmit direction. Must be zero for SCO links.

Air Mode: *Size: 1 Octet*

Value	Parameter Description
0x00	μ-law log
0x01	A-law log
0x02	CVSD
0x03	Transparent Data
0x04 – 0xFF	Reserved

7.7.36 Synchronous Connection Changed Event

Event	Event Code	Event Parameters
Synchronous Connection Changed	0x2D	Status, Connection_Handle, Transmission_Interval, Retransmission Window, Rx_Packet_Length, Tx_Packet_Length

Description:

The Synchronous Connection Changed event indicates to the Host that an existing Synchronous connection has been reconfigured. This event also indicates to the initiating Host (if the change was host initiated) if the issued command failed or was successful.

Command Parameters:

Status: *Size: 1 Octet*

Value	Parameter Description
0x00	Connection successfully reconfigured.
0x01 –0xFF	Reconfiguration failed to complete. See “Error Codes” on page 335 [Part D] for error codes and descriptions.

Connection_Handle: *Size: 2 Octets (12 Bits meaningful)*

Value	Parameter Description
0xXXXX	Connection Handle to be used to identify a connection between two BR/EDR Controllers. Range: 0x0000-0x0EFF (0x0F00 – 0x0FFF Reserved for future use)

Transmission_Interval: *Size: 1 Octet*

Value	Parameter Description
0xXX	Time between two consecutive SCO/eSCO instants measured in slots.

Retransmission window: *Size: 1 Octet*

Value	Parameter Description
0xXX	The size of the retransmission window measured in slots. Must be zero for SCO links.

Rx_Packet_Length: *Size: 2 Octets*

Value	Parameter Description
0xXXXX	Length in bytes of the SCO/eSCO payload in the receive direction.

Tx_Packet_Length: *Size: 2 Octets*

Value	Parameter Description
0xXXXX	Length in bytes of the SCO/eSCO payload in the transmit direction.

7.7.37 Sniff Subrating Event

Event	Event Code	Event Parameters
HCI Sniff Subrating	0x2E	Status Connection_Handle Maximum_Transmit_Latency Maximum_Receive_Latency Minimum_Remote_Timeout Minimum_Local_Timeout

Description:

The Sniff Subrating event indicates that the device associated with the Connection Handle has either enabled sniff subrating or the sniff subrating parameters have been renegotiated by the link manager. The Connection Handle will be a Connection Handle for an ACL connection. The Connection Handle event parameter indicates which connection the Sniff Subrating event is for.

Each BR/EDR Controller that is associated with the Connection Handle that has changed its subrating parameters will send the Sniff Subrating event to its host.

Event Parameters:

Status: *Size: 1 Octet*

Value	Parameter Description
0xXXXX	Connection Handle. Range: 0x0000 – 0x0EFF (0x0F00 – 0x0FFF Reserved for future use)

Connection_Handle: *Size: 2 Octets (12 bits meaningful)*

Value	Parameter Description
0xXXXX	Connection Handle. Range: 0x0000 – 0x0EFF (0x0F00 – 0x0FFF Reserved for future use)

Maximum_Transmit_Latency: *Size: 2 Octet*

Value	Parameter Description

N = 0xXXXX	Maximum latency for data being transmitted from the local device to the remote device. Latency = N * 0.625 msec (1 Baseband slot) Range for N: 0x0000 – 0xFFFE Time Range: 0 sec - 40.9 sec

Maximum_Receive_Latency: *Size: 2 Octet*

Value	Parameter Description
N = 0xXXXX	Maximum latency for data being received by the local device from the remote device. Latency = N * 0.625 msec (1 Baseband slot) Range for N: 0x0000 – 0xFFFE Time Range: 0 sec - 40.9 sec

Minimum_Remote_Timeout: *Size: 2 Octets*

Value	Parameter Description
N = 0xXXXX	The base sniff subrate timeout in baseband slots that the remote device shall use. Timeout = N * 0.625 msec (1 Baseband slot) Range for N: 0x0000 – 0x8000 Time Range: 0 sec – 40.9 sec

Minimum_Local_Timeout: *Size: 2 Octets*

Value	Parameter Description
N = 0xXXXX	The base sniff subrate timeout in baseband slots that the local device will use. Timeout = N * 0.625 msec (1 Baseband slot) Range for N: 0x0000 – 0x8000 Time Range: 0 sec – 40.9 sec

7.7.38 Extended Inquiry Result Event

Description:

The Extended Inquiry Result event indicates that a BR/EDR Controller has responded during the current inquiry process with extended inquiry response data. This event will be sent from the BR/EDR Controller to the Host upon

Event	Event Code	Event Parameters
Extended Inquiry Result	0x2F	Num_Responses, BD_ADDR, Page_Scan_Repetition_Mode, Reserved, Class_of_Device, Clock_Offset, RSSI, Extended_Inquiry_Response

reception of an Extended Inquiry Response from a remote device. One single Extended Inquiry Response is returned per event. This event contains RSSI and inquiry response data for the BR/EDR Controller that responded to the latest inquiry. The RSSI parameter is measured during the FHS packet returned by each responding slave. The Num_Responses parameter shall be set to one.

This event is only generated if the Inquiry_Mode parameter of the last Write_Inquiry_Mode command was set to 0x02 (Inquiry Result with RSSI format or Extended Inquiry Result format).

Note: This ensures that an old host will never receive the Extended Inquiry Result event.

If an inquiry response packet with the EIR field set to zero is received, the Inquiry Result with RSSI event format is used. If the EIR bit is set to one the Extended Inquiry Result event format is used. If the EIR bit is set to one but the controller failed to receive the extended inquiry response packet, the Extended_Inquiry_Response parameter is set to zeros. If an extended inquiry response packet from the same device is correctly received in a later response, another event shall be generated.

Note: The only difference between the Extended Inquiry Result event and the Inquiry Result with RSSI event is the additional Extended_Inquiry_Response parameter.

Note: The Extended_Inquiry_Response parameter is not interpreted by the controller. The tagged data set by the other host should be passed unaltered if it has been correctly received.

Event Parameters:

Num_Responses: *Size: 1 Octet*

Value	Parameter Description
0x01	Number of responses from the inquiry. The Extended Inquiry Result event always contains a single response.

BD_ADDR: *Size: 6 Octets*

Value	Parameter Description
0xXXXXXXXXXXXX	BD_ADDR for the device that responded.

Page_Scan_Repetition_Mode: *Size: 1 Octet*

Value	Parameter Description
0x00	R0
0x01	R1
0x02	R2
0x03 - 0xFF	Reserved

Reserved: *Size: 1 Octet*

Value	Parameter Description
0xXX	Reserved.

Class_of_Device: *Size: 3 Octets*

Value	Parameter Description
0xXXXXXX	Class of Device for the device that responded.

Clock_Offset *Size: 2 Octets*

Value	Parameter Description
Bit 14-0	Bit 16-2 of CLKslave-CLKmaster.
Bit 15	Reserved.

RSSI: *Size: 1 Octet*

Value	Parameter Description
0xXX	Range: -127 to +20
Units: dBm	

Extended_Inquiry_Response: *Size: 240 Octets*

Value	Parameter Description
	Extended inquiry response data as defined in [Vol 3 Part C], Section 8

7.7.39 Encryption Key Refresh Complete

Command	Event Code	Event Parameters
Encryption Key Refresh Complete	0x30	Status Connection_Handle

Description:

The Encryption Key Refresh Complete event is used to indicate to the Host that the encryption key was refreshed on the given Connection_Handle any time encryption is paused and then resumed. The BR/EDR Controller shall send this event when the encryption key has been refreshed due to encryption being started or resumed.

If the Encryption Key Refresh Complete event was generated due to an encryption pause and resume operation embedded within a change connection link key procedure, the Encryption Key Refresh Complete event shall be sent prior to the Change Connection Link Key Complete event.

If the Encryption Key Refresh Complete event was generated due to an encryption pause and resume operation embedded within a role switch procedure, the Encryption Key Refresh Complete event shall be sent prior to the Role Change event.

Event parameters:

Status: *Size: 1 Octet*

Value	Parameter Description
0x00	Encryption Key Refresh completed successfully
0x01 - 0xFF	Encryption Key Refresh failed. See “Error Codes” on page 335 [Part D] for list of Error Codes

Connection_Handle: *Size: 2 Octets (12 bits meaningful)*

Value	Parameter Description
0xXXXX	Connection Handle for the ACL connection to have the encryption key refreshed on. Range: 0x0000-0x0EFF (0x0F00 - 0x0FFF Reserved for future use).

7.7.40 IO Capability Request Event

Event	Event Code	Event Parameters
IO Capability Request	0x31	BD_ADDR

Description:

The IO Capability Request event is used to indicate that the IO capabilities of the host are required for a simple pairing process. The host shall respond with an HCI_IO_Capability_Reqeust_Reply command. This event will only be generated if simple pairing has been enabled with the HCI_Write_Simple_Pairing_Mode command.

Event Parameters:

BD_ADDR: *Size: 6 Octets*

Value	Parameter Description
0xXXXXXXXXXXXX	BD_ADDR of remote device involved in simple pairing process

7.7.41 IO Capability Response Event

Event	Event Code	Event Parameters
IO Capability Response	0x32	BD_ADDR, IO_Capability, OOB_Data_Present, Authentication_Requirements

Description:

The IO Capability Response event is used to indicate to the host that IO capabilities from a remote device specified by BD_ADDR have been received during a simple pairing process. This event will only be generated if simple pairing has been enabled with the HCI_Write_Simple_Pairing_Mode command.

Event Parameters:

BD_ADDR: *Size: 6 Octets*

Value	Parameter Description
0xXXXXXXXXXXXX	BD_ADDR identifying the device to which the IO capabilities apply.

IO_Capability: *Size: 1 Octet*

Value	Parameter Description
0x00	DisplayOnly
0x01	DisplayYesNo
0x02	KeyboardOnly
0x03	NoInputNoOutput
0x04 – 0xFF	Reserved for future use

OOB_Data_Present: *Size: 1 Octet*

Value	Parameter Description
0x00	OOB authentication data not present
0x01	OOB authentication data from remote device present
0x02 – 0xFF	Reserved for future use

Authentication_Requirements: *Size: 1 Octet*

Value	Parameter Description
0x00	MITM Protection Not Required –No Bonding. Numeric comparison with automatic accept allowed.

0x01	MITM Protection Required – No Bonding. Use IO Capabilities to determine authentication procedure
0x02	MITM Protection Not Required – Dedicated Bonding. Numeric comparison with automatic accept allowed.
0x03	MITM Protection Required – Dedicated Bonding. Use IO Capabilities to determine authentication procedure
0x04	MITM Protection Not Required – General Bonding. Numeric Comparison with automatic accept allowed.
0x05	MITM Protection Required – General Bonding. Use IO capabilities to determine authentication procedure.
0x06 - 0xFF	Reserved for future use

7.7.42 User Confirmation Request Event

Event	Event Code	Event Parameters
User Confirmation Request	0x33	BD_ADDR, Numeric_Value

Description:

The User Confirmation Request event is used to indicate that user confirmation of a numeric value is required. The host shall reply with either the User Confirmation Request Reply or the User Confirmation Request Negative Reply command. If the host has output capability it shall display the Numeric_Value until the Simple Pairing Complete event is received. It shall reply based on the yes/no response from the user. If the host has no input and no output it shall reply with the User Confirmation Request Reply command.

Event Parameters:

BD_ADDR: *Size: 6 Octets*

Value	Parameter Description
0xXXXXXXXXXXXX	BD_ADDR of device involved in Simple Pairing process.

Numeric_Value: *Size: 4 Octets*

Value	Parameter Description
0x00000000 – 0x000F423F	Numeric value to be displayed. Valid values are decimal 000000 – 999999.

7.7.43 User Passkey Request Event

Event	Event Code	Event Parameters
User Passkey Request	0x34	BD_ADDR

Description:

The User Passkey Request event is used to indicate that a passkey is required as part of a Simple Pairing process. The Host shall respond with either a User_Passkey_Request_Reply or User_Passkey_Request_Negative_Reply command. This event will only be generated if simple pairing has been enabled with the HCI_Write_Simple_Pairing_Mode command.

Event Parameters:

BD_ADDR: *Size: 6 Octets*

Value	Parameter Description
0xXXXXXXXXXXXX	BD_ADDR of the device involved in simple pairing process.

7.7.44 Remote OOB Data Request Event

Event	Event Code	Event Parameters
Remote OOB Data Request	0x35	BD_ADDR

Description:

The Remote OOB Data Request event is used to indicate that the Simple Pairing Hash C and the Simple Pairing Randomizer R is required for the Secure Simple Pairing process involving the device identified by BD_ADDR. The C and R values were transferred to the host from the remote device via an OOB mechanism. This event is sent by the controller because the host previously set the OOB Data Present parameter to "OOB authentication data from remote device present" in an IO Capability Request Reply command. The Host shall respond with the Remote OOB Data Request Reply command.

Event Parameters:

BD_ADDR: *Size: 6 Octets*

Value	Parameter Description
0xXXXXXXXXXXXX	BD_ADDR of the device from which the C and R values were received.

7.7.45 Simple Pairing Complete Event

Event	Event Code	Event Parameters
Simple Pairing Complete	0x36	Status, BD_ADDR

Description:

The Simple Pairing Complete event is used to indicate that the simple pairing process has completed. A host that is displaying a numeric value can use this event to change its UI.

When the LMP simple pairing sequences fail for any reason, the Simple Pairing Complete event shall be sent to the Host. When Simple Pairing Complete event is sent in response to the IO capability exchange failing, the Status parameter shall be set to the error code received from the remote device. Otherwise, the Status shall be set to the error code “Authentication Failure.”

Event Parameters:

Status: *Size: 1 Octet*

Value	Parameter Description
0x00	Simple Pairing succeeded
0x01 - 0xFF	Simple Pairing failed. See “Error Codes” on page 335 [Part D] for a list of Error Codes.

BD_ADDR: *Size: 6 Octets*

Value	Parameter Description
0xXXXXXXXXXXXX	BD_ADDR of the device involved in simple pairing process.

7.7.46 Link Supervision Timeout Changed Event

Event	Event Code	Event Parameters
Link Supervision Timeout Changed	0x38	Connection_Handle, Link_Supervision_Timeout

Description:

The Link_Supervision_Timeout_Changed event is used to notify the slave's Host when the Link_Supervision_Timeout parameter is changed in the slave Controller. This event shall only be sent to the Host by the slave controller upon receiving an LMP_supervision_timeout PDU from the master.

Note: the Connection_Handle used for this command shall be the ACL connection of the appropriate device.

Event Parameters:

Connection_Handle: *Size: 2 Octets (12 bits meaningful)*

Value	Parameter Description
0xXXXX	Connection Handle Range: 0x0000-0x0EFF (0x0F00 - 0x0FFF Reserved for future use)

Link_Supervision_Timeout: *Size: 2 Octets*

Value	Parameter Description
N = 0xXXXX	Measured in Number of Baseband slots Link_Supervision_Timeout = N*0.625 msec (1 Baseband slot) Range for N: 0x0001 - 0xFFFF Time Range: 0.625ms - 40.9 sec (0 means infinite timeout)

7.7.47 Enhanced Flush Complete Event

Event	Event Code	Event parameter
Enhanced Flush Complete	0x39	Handle

Description:

The Enhanced Flush Complete event is used to indicate that an Enhanced Flush is complete for the specified Handle.

Event Parameters:

Handle: *Size: 2 Octets (12 bits meaningful)*

Value	Parameter Description
0xXXXX	Handle of the link for which Controller cannot provide the requested QoS. The Handle is a Connection Handle for a BR/EDR Controller and a Logical Link Handle for an AMP Controller. Range: 0x0000 - 0x0EFF (0x0F00 - 0x0FFF Reserved for future use)

7.7.48 User Passkey Notification Event

Event	Event Code	Event Parameters
User Passkey Notification	0x3B	BD_ADDR, Passkey

Description:

The User Passkey Notification event is used to provide a passkey for the Host to display to the user as required as part of a Simple Pairing process. The Passkey parameter shall be a randomly generated number (see [Part H], Security Specification, Section 2 on page 923) generated by the Controller modulo 1,000,000.

This event will be generated if the IO capabilities of the local device are DisplayOnly or DisplayYesNo and the IO capabilities of the remote device are KeyboardOnly.

This event will only be generated if simple pairing has been enabled with the HCI_Write_Simple_Pairing_Mode command.

Event Parameters:

BD_ADDR: *Size: 6 Octets*

Value	Parameter Description
0xXXXXXXXXXXXX	BD_ADDR of the device involved in simple pairing process.

Passkey: *Size: 4 Octets*

Value	Parameter Description
0x00000000 - 0x000F423F	Passkey to be displayed. Valid values are decimal 000000 - 999999.

7.7.49 Keypress Notification Event

Command	Event Code	Event Parameters
Keypress Notification	0x3C	BD_ADDR, Notification_Type

Description:

The Keypress Notification event is sent to the Host after a passkey notification has been received by the Link Manager on the given BD_ADDR. The Notification_Type parameter may be used by the Host's user interface.

Event parameters:

BD_ADDR: *Size: 6 Octets*

Value	Parameter Description
0xXXXXXXXXXXXX	BD_ADDR of remote device involved in simple pairing process

Notification_Type: *Size: 1 Octet*

Value	Parameter Description
0	Passkey entry started
1	Passkey digit entered
2	Passkey digit erased
3	Passkey cleared
4	Passkey entry completed
5-255	Reserved for future use

7.7.50 Remote Host Supported Features Notification Event

Command	Event Code	Event Parameters
Remote Host Supported Features Notification	0x3D	BD_ADDR Host_Supported_Features

Description:

The Remote Host Supported Features Notification event is used to return the LMP extended features page containing the Host features. The BD_ADDR is the address of the remote device.

This event shall only be generated after the LMP extended features are read from the remote device during a connection initiated by a Remote Name Request command.

Note: this event is not generated during a connection initiated by the Create Connection command.

Event parameters:

BD_ADDR: *Size: 6 Octets*

Value	Parameter Description
0xXXXXXXXXXXXX	BD_ADDR of remote device.

Host_Supported_Features: *Size: 8 Octets*

Value	Parameter Description
0xFFFFFFFFFFFFFFFF	Bit map of Host Supported Features page of LMP extended features. For more information, see Link Manager Protocol Specification on page 205.

7.7.51 Physical Link Complete Event

Event	Event Code	Event Parameters
Physical Link Complete	0x40	Status, Physical_Link_Handle

Description:

The Physical Link Complete event indicates to the Host that a new AMP physical link has been established. This event is used as a response for either Create Physical Link or Accept Physical Link commands and is preceded by a Command Status event.

Event Parameters:

Status: *Size: 1 Octet*

Value	Parameter Description
0x00	Connection successfully completed.
0x01-0xFF	Connection failed to Complete. See “Error Codes” on page 335 [Part D]for a list of error codes and descriptions.

Physical_Link_Handle: *Size: 1 Octet*

Value	Parameter Description
0xXX	Physical Link Handle identifying the physical link which has been created.

7.7.52 Channel Selected Event

Event	Event Code	Event Parameters
Channel Selected	0x41	Physical_Link_Handle

Description:

The Channel Selected event indicates to the Host originating the physical link that the link information data is available to be read using the Read Local AMP Assoc command. This allows the originating device to determine link implementation parameters such as an underlying physical channel choice. This structure shall be sent in the AMP Create Physical Link Request (see [Vol 3 Part E], Section 3.11]) and be used at the remote end in the Accept Physical Link command.

Event Parameters:

Physical_Link_Handle: *Size: 1 Octet*

Value	Parameter Description
0xXX	Physical Link Handle to the established physical link.

7.7.53 Disconnection Physical Link Complete Event

Event	Event Code	Event Parameters
Disconnection Physical Link Complete	0x42	Status, Physical_Link_Handle, Reason

Description:

The Disconnection Physical Link Complete event occurs when a physical link is terminated. The status parameter indicates if the disconnection was successful or not.

When a physical link fails, one Disconnection Logical Link Complete event will be returned for each logical channel on the physical link with the corresponding Logical Link Handle as a parameter.

Event Parameters:

Status: *Size: 1 Octet*

Value	Parameter Description
0x00	Disconnection has occurred.
0x01-0xFF	Disconnection failed to complete. See “Error Codes” on page 335 [Part D] for a list of error codes and descriptions.

Physical_Link_Handle: *Size: 1 Octet*

Value	Parameter Description
0xXX	Physical Link Handle which was disconnected.

Reason: *Size: 1 Octet*

Value	Parameter Description
0xXX	Reason for disconnection. See “Error Codes” on page 335 [Part D] for error codes and descriptions.

7.7.54 Physical Link Loss Early Warning Event

Event	Event Code	Event Parameters
Physical Link Loss Early Warning	0x43	Physical_Link_Handle, Link_Loss_Reason

Description:

The Physical Link Loss Early Warning event occurs when a physical link has early indication that the link may be disrupted. Data transmission and reception may suffer impairment on this link. The Host may use this to indicate to the user that traffic may be disrupted.

The exact low level meaning is dependent on the AMP type. Some AMP types may never generate this event.

Event Parameters:

Physical_Link_Handle: *Size: 1 Octet*

Value	Parameter Description
0xXX	Physical Link Handle to which the warning refers.

Link_Loss_Reason: *Size: 1 Octet*

Value	Parameter Description
0	Unknown
1	Range related
2	Bandwidth related

Value	Parameter Description
3	Resolving conflict
4	Interference
5-255	Reserved

7.7.55 Physical Link Recovery Event

Event	Event Code	Event Parameters
Physical Link Recovery	0x44	Physical_Link_Handle

Description:

The Physical Link Recovery event indicates that whatever interruption caused an earlier Physical Link Loss Early Warning event has now been cleared. The normal data transmission and reception service can be expected. The exact low level meaning is dependent on the AMP type. The Host may use this event to cancel any indication to the user caused by the Physical Link Loss Early Warning event.

Event Parameters:

Physical_Link_Handle: *Size: 1 Octet*

Value	Parameter Description
0xXX	Physical Link Handle to which the warning referred.

7.7.56 Logical Link Complete Event

Event	Event Code	Event Parameters
Logical Link Complete	0x45	Status, Logical_Link_Handle, Physical_Link_Handle, TX_Flow_Spec_ID

Description:

The Logical Link Complete event indicates to both of the Hosts forming the connection whether a new connection has been established successfully.

Event Parameters:

Status: *Size: 1 Octet*

Value	Parameter Description
0x00	Connection successfully completed.

Value	Parameter Description
0x01-0xFF	Connection failed to Complete. See “Error Codes” on page 335 [Part D]for a list of error codes and descriptions.

Logical_Link_Handle: *Size: 2 Octets (12 Bits meaningful)*

Value	Parameter Description
0xXXXX	Logical Link Handle to be used to identify a connection between two BR/EDR Controllers with communicating AMPs. The Logical Link Handle is used as an identifier for transmitting and receiving data. Range: 0x0000-0x0EFF (0x0F00 - 0x0FFF Reserved for future use)

Physical_Link_Handle: *Size: 1 Octet*

Value	Parameter Description
0xXX	Physical Link identifying the physical link over which the logical link has been created.

TX_Flow_Spec_ID: *Size: 1 Octet*

Value	Parameter Description
0xXX	Flow Spec ID identifying the logical link creation that completed. This matches the ID field of the TX_Flow_Spec

7.7.57 Disconnection Logical Link Complete Event

Event	Event Code	Event Parameters
Disconnection Logical Link Complete	0x46	Status, Logical_Link_Handle, Reason

Description:

The Disconnection Logical Link Complete event occurs when a logical link is terminated on the local Controller. The status parameter indicates if the disconnection was successful or not.

Note: When the local Controller disconnects a logical link, the remote Controller will not be notified.

Note: When a physical link fails, one Disconnection Logical Link Complete event will be returned for each logical channel on the physical link with the corresponding Logical Link Handle as a parameter.

Event Parameters:

Status: *Size: 1 Octet*

Value	Parameter Description
0x00	Disconnection has occurred.
0x01-0xFF	Disconnection failed to complete. See "Error Codes" on page 335 [Part D] for a list of error codes and descriptions.

Logical_Link_Handle: *Size: 2 Octets (12 Bits meaningful)*

Value	Parameter Description
0xXXXX	Logical Link Handle which was disconnected. Range: 0x0000-0x0EFF (0x0F00 - 0x0FFF Reserved for future use)

Reason: *Size: 1 Octet*

Value	Parameter Description
0xXX	Reason for disconnection. See "Error Codes" on page 335 [Part D] for error codes and descriptions.

7.7.58 Flow Spec Modify Complete Event

Event	Event Code	Event Parameters
Flow Spec Modify Complete	0x47	Status, Handle

Description:

The Flow Spec Modify Complete event indicates to the Host that a Flow Spec Modify command has been completed. This event also indicates to the Host which issued the Flow Spec Modify command and then received a Command Status event if the issued command failed or was successful.

Event Parameters:

Status: *Size: 1 Octet*

Value	Parameter Description
0x00	Flow Spec modification successfully completed.
0x01-0xFF	Operation failed to Complete. See "Error Codes" on page 335 [Part D] for a list of error codes and descriptions.

Handle: *Size: 2 Octets (12 Bits meaningful)*

Value	Parameter Description
0xXXXX	Connection Handle if the receiving Controller is a BR/EDR Controller. Logical Link Handle, if the receiving Controller is an AMP Controller, identifying the logical link to be changed. Logical Link Handle to be used to identify a connection between two BR/EDR Controllers with communicating AMPs. Range: 0x0000-0x0EFF (0x0F00 - 0x0FFF Reserved for future use)

7.7.59 Number Of Completed Data Blocks Event

Event	Event Code	Event Parameters
Number Of Completed Data Blocks	0x48	Total_Num_Data_Blocks, Number_of_Handles, Handle[i], Num_Of_Completed_Packets[i], Num_Of_Completed_Blocks[i]

Description:

The Number Of Completed Data Blocks event is used by the Controller to indicate to the Host how many HCI ACL Data Packets have been completed (transmitted or flushed), and how many data block buffers have been freed, for each Handle (a Connection_Handle if the Controller is a BR/EDR Controller or a Logical_Link_Handle if the Controller is an AMP Controller) since the previous Number Of Completed Data Blocks event was sent to the Host. This means that the corresponding buffer space has been freed in the Controller. Based on this information, and the Total_Num_Data_Blocks parameter, the Host can determine for which Handles the following HCI ACL Data Packets should be sent to the Controller.

The host should determine the number of blocks occupied by each ACL data packet by dividing the ACL data packet size by the Data_Block_Length parameter of the Read Data Block Size command.

The Total_Num_Data_Blocks parameter indicates the total number of buffer blocks available in the Controller. Before any Number of Complete Data Blocks event is received, the value of Total_Num_Data_Blocks from the Read_Data_Block_Size command is used. This allows the value to be updated at any time, which provides the Controller with some flexibility on its buffer allocation.

If the Controller were permitted to reduce its buffer pool in an arbitrary way then there is a potential race condition, in the case where the Host has just started to transmit a new packet. In order to prevent this race condition, the Total_Num_Data_Blocks parameter shall not indicate a reduction in the pool of blocks greater than the sum of the Num_Of_Completed_Blocks values in this

event. If a greater reduction in the block pool is required then the value 0 shall be indicated here. The value 0 has a special meaning and indicates that the Host shall re-issue the Read Data Block Size command in order to find the new buffer pool size. The Host shall wait for any outstanding TX to complete and shall defer further TX until the Read Data Block Size command has been issued and completed. The Controller shall reduce its allocation only after the Read Data Block Size command has been issued and completed. This ensures that the race condition described above is avoided.

Event Parameters:

Total_Num_Data_Blocks: *Size: 2 Octets*

Value	Parameter Description
0x0000	The size of the buffer pool may have changed. The Host is requested to issue a Read Data Block Size command in order to determine the new value of Total_Num_Data_Blocks.
0xXXXX	Total number of data block buffers available in the Controller for the storage of data packets scheduled for transmission. This indicates the existing value is unchanged, or increased, or reduced by up to the sum of the Num_Of_Completed_Blocks values in this command.

Number_of_Handles: *Size: 1 Octet*

Value	Parameter Description
0xXX	The number of Handles and Num_Of_Completed_Packets and Num_Of_Completed_Blocks parameter triples contained in this event.
Range: 0-255	

Handle[i]: *Size: Number_of_Handles * 2 Octets(12 Bits meaningful)*

Value	Parameter Description
0xXXXX	Handle (Connection_Handle for a BR/EDR Controller or a Logical_Link_Handle for an AMP Controller). Range: 0x0000-0x0EFF (0x0F00 - 0x0FFF Reserved for future use)

Num_Of_Completed_Packets [i]: *Size: Number_of_Handles * 2 Octets*

Value	Parameter Description
N = 0xXXXX	The number of HCI ACL Data Packets that have been completed (transmitted or flushed) for the associated Handle since the previous time that a Number Of Completed Data Blocks event provided information about this Handle. Range for N: 0x0000-0xFFFF

Num_Of_Completed_Blocks [i]: *Size: Number_of_Handles * 2 Octets*

Value	Parameter Description
N = 0xXXXX	The number of data blocks that have been freed for the associated Handle since the previous time that a Number Of Completed Data Blocks event provided information about this Handle. Range for N: 0x0000-0xFFFF

7.7.60 Short Range Mode Change Complete Event

Event	Event Code	Event Parameters
HCI_Short_Range_Mode_Change_Complete	0x4C	Status, Physical_Link_Handle, Short_Range_State

Description:

The Short_Range_Mode_Change_Complete event occurs after the AMP Controller has been notified to enable or disable Short Range Mode for a given physical link. The status parameter indicates if the configuration change was successful or not.

Event Parameters:

Status: *Size: 1 Octet*

Value	Parameter Description
0x00	Short Range Mode configuration has occurred.
0x01-0xFF	Short Range Mode configuration failed to complete. See “Error Codes” on page 335 [Part D] for a list of error codes and descriptions.

Physical_Link_Handle: *Size: 1 Octet*

Value	Parameter Description
0xXX	Physical Link Handle to which the configuration applies.

Short_Range_Mode_State: *Size: 1 Octet*

Value	Parameter Description
0xXX	State of Short Range Mode in controller. 0 - Short Range Mode disabled 1 - Short Range Mode enabled 0x02 - 0xFF - reserved

7.7.61 AMP Status Change Event

Event	Event Code	Event Parameters
HCI_AMP_Status_Change	0x4D	Status, AMP_Status

Description:

The AMP_Status_Change event can occur at any time, after initial Read Local AMP_Info request, and when the AMP Controller detects a change has occurred regarding status and is based on availability thresholds.

Event Parameters:

Status: *Size: 1 Octet*

Value	Parameter Description
0x00	AMP_Status_Change has occurred.
0x01-0xFF	AMP_ configuration failed to complete. See “Error Codes” on page 335 [Part D]for a list of error codes and descriptions.

AMP_Status: *Size: 1 Octet*

Value	Parameter Description
0x00	The Controller radio is available but is currently physically powered down. This value should be used if the AMP Controller is present and can be powered up by the AMP Manager. This value indicates that there may be a cost of time and power to use this AMP Controller (i.e., the time taken and power required to power up the AMP Controller). These costs are AMP type and AMP implementation dependant.
0x01	This value indicates that the AMP Controller is only used by Bluetooth technology and will not be shared with other non-Bluetooth technologies. This value shall only be used if the AMP Controller is powered up. This value does not indicate how much bandwidth is currently free on the AMP Controller.
0x02	The AMP Controller has no capacity available for Bluetooth operation This value indicates that all of the AMP Controllers bandwidth is currently allocated to servicing a non Bluetooth technology. A device is permitted to create a Physical Link to an AMP Controller that has this status. This value shall only be used if the AMP Controller is powered up.

Value	Parameter Description
0x03	The AMP Controller has low capacity available for Bluetooth operation This value indicates that the majority of the AMP Controllers bandwidth is currently allocated to servicing a non Bluetooth technology. An AMP Controller that with capacity in the approximate range of 0 < capacity < 30% should indicate this value. This value does not indicate how much of the capacity available for Bluetooth operation is currently available. This value shall only be used if the AMP Controller is powered up.
0x04	The AMP Controller has medium capacity available for Bluetooth operation An AMP Controller that with capacity in the approximate range of 30% < capacity < 70% should indicate this value. This value does not indicate how much of the capacity available for Bluetooth operation is currently available. This value shall only be used if the AMP Controller is powered up
0x05	The AMP Controller has high capacity available for Bluetooth operation. This value indicates that the majority of the AMP Controllers bandwidth is currently allocated to servicing the Bluetooth technology. An AMP Controller that with capacity in the approximate range of 70% < capacity < 100% should indicate this value. This value does not indicate how much of the capacity available for Bluetooth operation is currently available. This value shall only be used if the AMP Controller is powered up
0x06	The AMP Controller has full capacity available for Bluetooth operation. This value indicates that while currently the AMP is only being used by Bluetooth the device allows a different technology to share the radio. This value shall be used by devices that are not capable of determining the current available capacity of an AMP that is shared by a different technology. This value does not indicate how much of the capacity available for Bluetooth operation is currently available. This value shall only be used if the AMP Controller is powered up.
0x07 - 0xFF	Reserved

7.7.62 AMP Start Test Event

Event	Event Code	Event Parameters
HCI_AMP_Start_Test	0x49	Status, Test Scenario

Description:

The HCI_AMP_Start_Test event shall be generated when the HCI_AMP_Test_Command has completed and the first data is ready to be sent or received

Event Parameters:

Status: *Size: 1 Octet*

Value	Parameter Description
0x00	Test command succeeded
0x01-0xFF	Test command failed. See "Error Codes" on page 335 [Part D]

Test Scenario: *Size: 1 Octet*

Value	Parameter Description
0xXX	See the Test Commands section of the Protocol Adaptation Layer Functional Specification for the Controller type

7.7.63 AMP Test End Event

Event	Event Code	Event Parameters
HCI_AMP Test End	0x4A	Status, Test Scenario

Description:

The HCI_AMP_Test_End_Event shall be generated to indicate that the AMP has transmitted or received the number of frames/bursts configured.

If the Receiver reports are enabled an HCI_AMP Receiver Report Event shall be generated.

Event Parameters:

Status: *Size: 1 Octet*

Value	Parameter Description
0x00	AMP Test command succeeded
0x01-0xFF	Test command failed. See "Error Codes" on page 335 [Part D]

Test Scenario: *Size: 1 Octet*

Test Scenario for which the test end event has been generated.

Value	Parameter Description
0xXX	See the Test Commands section of the Protocol Adaptation Layer Functional Specification for the Controller type

7.7.64 AMP Receiver Report Event

The HCI_AMP_Receiver_Report Event shall be sent from the AMP to the tester via the AMP_Test_Manager at the interval configured by the HCI_Enable_AMP_Receiver_Reports command.

Event	Event Code	Event Parameters
HCI_AMP_Receiver_Report	0x4B	Controller_Type, Reason, Event_type, Number_Of_Frames, Number_Of_Error_Frames, Number_Of_Bits, Number_Of_Error_Bits

Description:

The HCI_AMP_Receiver_Report Event is generated to indicate the number of frames received and optionally the number of bits in error detected.

Event Parameters:

Controller_Type: *Size: 1 Octet*

Value	Parameter Description
0xXX	See Bluetooth Assigned Numbers

Reason: *Size: 1 Octet*

Value	Parameter Description
0xXX	0x00 Configured Interval report 0x01 Test Ended report 0x02 – 0xFF Reserved

Event_type: *Size: 4 Bytes*

Value	Parameter Description

0xXX	0x00 Frames received report 0x01 Frames received and bits in error report (optional) 0x02 to 0xFF Reserved

Number_Of_Frames: *Size: 2 Bytes*

Value	Parameter Description
0xXXXX	Number of frames received so far

Number_Of_Error_Frames: *Size: 2 Bytes*

Value	Parameter Description
0xXXXX	Number of frames with errors received so far

Number_Of_Bits: *Size: 4 Bytes*

Value	Parameter Description
0xXXXXXXXX	Number of bits received so far. Shall be set to 0x00000000 if the Event_type is not equal to 0x01.

Number_Of_Error_Bits: *Size: 4 Bytes*

Value	Parameter Description
0xXXXXXXXX	Number of bit errors received so far. Shall be set to 0x00000000 if the Event_type is not equal to 0x01.

8 LIST OF FIGURES

Figure 1.1: Overview of the Lower Software Layers 362
Figure 1.2: End to End Overview of Lower Software Layers to Transfer Data 363
Figure 5.1: HCI Command Packet 413
Figure 5.2: HCI ACL Data Packet 414
Figure 5.3: HCI Synchronous Data Packet 416
Figure 5.4: HCI Event Packet 418
Figure 7.1: Local Loopback Mode 647
Figure 7.2: Remote Loopback Mode 647

9 LIST OF TABLES

Table 3.1: Overview of commands and events....365
Table 3.2: Generic events....366
Table 3.3: Controller flow control....367
Table 3.4: Controller information....368
Table 3.5: Controller configuration....369
Table 3.6: Device discovery....372
Table 3.7: Connection setup....374
Table 3.8: Remote information....379
Table 3.9: Synchronous connections....380
Table 3.10: Connection state....381
Table 3.11: Piconet structure....383
Table 3.12: Quality of service....384
Table 3.13: Physical links....386
Table 3.14: Controller flow control.....388
Table 3.15: Link information....389
Table 3.16: Authentication and encryption....390
Table 3.17: Testing....395
Table 3.18: Alphabetical list of commands and events....397

10 APPENDIX A: DEPRECATED COMMANDS, EVENTS AND CONFIGURATION PARAMETERS

Commands, events and configuration parameters in this section were in prior versions of the specification, but have been determined not to be required.

They may be implemented by a controller to allow for backwards compatibility with a host utilizing a prior version of the specification.

A host should not use these commands.

10.1 Read Page Scan Mode Command 724
10.2 Write Page Scan Mode Command 725
10.3 Read Page Scan Period Mode Command 726
10.4 Write Page Scan Period Mode Command 727
10.5 Add SCO Connection Command 728
10.6 Page Scan Mode Change Event 730
10.7 Read Country Code Command 731
10.8 Read Encryption Mode Command 732
10.9 Write Encryption Mode Command 732
10.10 Deprecated Parameters 733
10.10.1 Authentication Enable 733
10.10.2 Encryption Mode 733
10.10.3 Page Scan Mode 734

10.1 READ PAGE SCAN MODE COMMAND

Command	OGF	OCF	Command Parameters	Return Parameters
HCI_Read_Page_Scan_Mode	0x03	0x003D		Status, Page_Scan_Mode

Description:

This command is used to read the default Page Scan Mode configuration parameter of the local BR/EDR Controller. See “Page Scan Mode” on page 734.

Command Parameters:

None

Return Parameters:

Status: *Size: 1 Octet*

Value	Parameter Description
0x00	Read_Page_Scan_Mode command succeeded.
0x01-0xFF	Read_Page_Scan_Mode command failed. See “Error Codes” on page 335 [Part D] for a list of error codes and descriptions.

Page_Scan_Mode: *Size: 1 Octet*

Value	Parameter Description
See Appendix A, “Page Scan Mode” on page 734.	

Event(s) generated (unless masked away):

When the Read_Page_Scan_Mode command has completed, a Command Complete event will be generated.

10.2 WRITE PAGE SCAN MODE COMMAND

OGF: 0x03 (Controller and baseband commands)

Command	OGF	OCF	Command Parameters	Return Parameters
HCI_Write_Page_Scan_Mode	0x03	0x003E	Page_Scan_Mode	Status

Description:

This command is used to write the default Page Scan Mode configuration parameter of the local BR/EDR Controller. See “Page Scan Mode” on page 734.

Command Parameters:

Page_Scan_Mode: *Size: 1 Octet*

Value	Parameter Description
See Appendix A, See “Page Scan Mode” on page 734..	

Return Parameters:

Status: *Size: 1 Octet*

Value	Parameter Description
0x00	Write_Page_Scan_Mode command succeeded.
0x01-0xFF	Write_Page_Scan_Mode command failed. See “Error Codes” on page 335 [Part D] for a list of error codes and descriptions.

Event(s) generated (unless masked away):

When the Write_Page_Scan_Mode command has completed, a Command Complete event will be generated.

10.3 READ PAGE SCAN PERIOD MODE COMMAND

Command	OCF	Command Parameters	Return Parameters
HCI_Read_Page_Scan_Period_Mode	0x003B		Status, Page_Scan_Period_Mode

Description:

This command is used to read the mandatory Page_Scan_Period_Mode configuration parameter of the local BR/EDR Controller. See Section 6.10 on page 422.

Command Parameters:

None

Return Parameters:

Status: *Size: 1 Octet*

Value	Parameter Description
0x00	Read_Page_Scan_Period_Mode command succeeded.
0x01-0xFF	Read_Page_Scan_Period_Mode command failed. See "Error Codes" on page 335 [Part D] for a list of error codes and descriptions.

Page_Scan_Period_Mode: *Size: 1 Octet*

Value	Parameter Description
0x00	P0
0x01	P1
0x02	P2
0x03-0xFF	Reserved.

Event(s) generated (unless masked away):

When the Read_Page_Scan_Period_Mode command has completed, a Command Complete event will be generated.

10.4 WRITE PAGE SCAN PERIOD MODE COMMAND

Command	OCF	Command Parameters	Return Parameters
HCI_Write_Page_Scan_Period_Mode	0x003C	Page_Scan_Period_Mode	Status

Description:

This command is used to write the mandatory Page_Scan_Period_Mode configuration parameter of the local BR/EDR Controller. See Section 6.10 on page 422.

Command Parameters:

Page_Scan_Period_Mode: *Size: 1 Octet*

Value	Parameter Description
0x00	P0
0x01	P1
0x02	P2. **Default.**
0x03-0xFF	Reserved.

Return Parameters:

Status: *Size: 1 Octet*

Value	Parameter Description
0x00	Write_Page_Scan_Period_Mode command succeeded.
0x01-0xFF	Write_Page_Scan_Period_Mode command failed. See "Error Codes" on page 335 [Part D] for a list of error codes and descriptions.

Event(s) generated (unless masked away):

When the Write_Page_Scan_Period_Mode command has completed, a Command Complete event will be generated.

10.5 ADD SCO CONNECTION COMMAND

Command	OGF	OCF	Command Parameters	Return Parameters
HCI_Add_SCO_Connection	0x01	0x0007	Connection_Handle, Packet_Type	

Description:

This command will cause the Link Manager to create a SCO connection using the ACL connection specified by the Connection_Handle command parameter. This command causes the local BR/EDR Controller to create a SCO connection. The Link Manager will determine how the new connection is established. This connection is determined by the current state of the device, its piconet, and the state of the device to be connected. The Packet_Type command parameter specifies which packet types the Link Manager should use for the connection. The Link Manager must only use the packet type(s) specified by the Packet_Type command parameter for sending HCI SCO Data Packets. Multiple packet types may be specified for the Packet_Type command parameter by performing a bitwise OR operation of the different packet types. The Link Manager may choose which packet type is to be used from the list of acceptable packet types. A Connection Handle for this connection is returned in the Connection Complete event (see below).

Note: An SCO connection can only be created when an ACL connection already exists and when it is not put in park. For a definition of the different packet types, see the “Baseband Specification” on page 57 [Part B].

Note: At least one packet type must be specified. The Host should enable as many packet types as possible for the Link Manager to perform efficiently. However, the Host must not enable packet types that the local device does not support.

Command Parameters:

Connection_Handle *Size 2 Octets (12 Bits meaningful)*

Value	Parameter Description
0xXXXX	Connection Handle for the ACL connection being used to create an SCO connection. Range: 0x0000-0x0EFF (0x0F00 - 0x0FFF Reserved for future use)

Packet_Type: *Size: 2 Octets*

Value	Parameter Description
0x0001	Reserved for future use.

0x0002	Reserved for future use.
0x0004	Reserved for future use.
0x0008	Reserved for future use.
0x0010	Reserved for future use.
0x0020	HV1
0x0040	HV2
0x0080	HV3
0x0100	Reserved for future use.
0x0200	Reserved for future use.
0x0400	Reserved for future use.
0x0800	Reserved for future use.
0x1000	Reserved for future use.
0x2000	Reserved for future use.
0x4000	Reserved for future use.
0x8000	Reserved for future use.

Return Parameters:

None.

Event(s) generated (unless masked away):

When the Controller receives the Add_SCO_Connection command, it sends the Command Status event to the Host. In addition, when the LM determines the connection is established, the local Controller will send a Connection Complete event to its Host, and the remote Controller will send a Connection Complete event or a Synchronous Connection Complete event to the Host. The Connection Complete event contains the Connection Handle if this command is successful.

Note: no Command Complete event will be sent by the Controller to indicate that this command has been completed. Instead, the Connection Complete event will indicate that this command has been completed.

10.6 PAGE SCAN MODE CHANGE EVENT

Event	Event Code	Event Parameters
Page Scan Mode Change	0x1F	BD_ADDR, Page_Scan_Mode

Description:

The Page Scan Mode Change event indicates that the connected remote BR/EDR Controller with the specified BD_ADDR has successfully changed the Page_Scan_Mode.

Event Parameters:

BD_ADDR: *Size: 6 Octets*

Value	Parameter Description
0xXXXXXXXXXXXX	BD_ADDR of the remote device.

Page_Scan_Mode: *Size: 1 Octet*

Value	Parameter Description
0x00	Mandatory Page Scan Mode.
0x01	Optional Page Scan Mode I.
0x02	Optional Page Scan Mode II.
0x03	Optional Page Scan Mode III.
0x04 – 0xFF	Reserved.

10.7 READ COUNTRY CODE COMMAND

Command	OGF	OCF	Command Parameters	Return Parameters
HCI_Read_Country_Code	0x04	0x0007		Status, Country_Code

Description:

This command will read the value for the Country_Code return parameter. The Country_Code defines which range of frequency band of the ISM 2.4 GHz band will be used by the device. Each country has local regulatory bodies regulating which ISM 2.4 GHz frequency ranges can be used.

Command Parameters:

None.

Return Parameters:

Status: *Size: 1 Octet*

Value	Parameter Description
0x00	Read_Country_Code command succeeded.
0x01-0xFF	Read_Country_Code command failed. See “Error Codes” on page 335 [Part D] for error codes and descriptions.

Country_Code: *Size: 1 Octet*

Value	Parameter Description
0x00	North America & Europe* and Japan
0x01	France
0x04-FF	Reserved for Future Use.

*. Except France

Event(s) generated (unless masked away):

When the Read_Country_Code command has completed, a Command Complete event will be generated.

10.8 READ ENCRYPTION MODE COMMAND

Command	OCF	Command Parameters	Return Parameters
HCI_Read_Encryption_Mode	0x0021		Status, Encryption_Mode

Description:

This command will read the value for the Encryption_Mode configuration parameter. See Section 10.10.2 on page 733.

Command Parameters:

None.

Return Parameters:

Status: *Size: 1 Octet*

Value	Parameter Description
0x00	Read_Encryption_Mode command succeeded.
0x01-0xFF	Read_Encryption_Mode command failed. See "Error Codes" on page 335 [Part D] for a list of error codes and descriptions.

Encryption_Mode: *Size: 1 Octet*

Value	Parameter Description
See Section 10.10.2 on page 733	

Event(s) generated (unless masked away):

When the Read_Encryption_Mode command has completed, a Command Complete event will be generated.

10.9 WRITE ENCRYPTION MODE COMMAND

Command	OCF	Command Parameters	Return Parameters
HCI_Write_Encryption_Mode	0x0022	Encryption_Mode	Status

Description:

This command will write the value for the Encryption_Mode configuration parameter. See Section 10.10.2 on page 733.

Command Parameters:

Encryption_Mode: *Size: 1 Octet*

Value	Parameter Description
See Section 10.10.2 on page 733.	

Return Parameters:

Status: *Size: 1 Octet*

Value	Parameter Description
0x00	Write_Encryption_Mode command succeeded.
0x01-0xFF	Write_Encryption_Mode command failed. See "Error Codes" on page 335 [Part D] for a list of error codes and descriptions.

Event(s) generated (unless masked away):

When the Write_Encryption_Mode command has completed, a Command Complete event will be generated.

10.10 DEPRECATED PARAMETERS

10.10.1 Authentication Enable

The Authentication_Enable parameter controls if the local device requires to authenticate the remote device at connection setup (between the Create_Connection command or acceptance of an incoming ACL connection and the corresponding Connection Complete event). At connection setup, only the device(s) with the Authentication_Enable parameter enabled will try to authenticate the other device.

Note: Changing this parameter does not affect existing connections.

Value	Parameter Description
0x00	Authentication not required.
0x01	Authentication required for all connections.
0x02-0xFF	Reserved

10.10.2 Encryption Mode

The Encryption_Mode parameter controls if the local device requires encryption to the remote device at connection setup (between the Create_Connection command or acceptance of an incoming ACL connection and the corresponding Connection Complete event). At connection setup, only devices with the Authentication_Enabled configuration parameter set to required and the

Encryption_Mode configuration parameter set to required will try to encrypt the physical link to the other device.

Note: Changing this parameter does not affect existing connections.

A temporary link key is used when both broadcast and point-to-point traffic are encrypted.

The Host must not specify the Encryption_Mode parameter with more encryption capability than its local device currently supports, although the parameter is used to request the encryption capability to the remote device. Note that the Host must not request the command with the Encryption_Mode parameter set to 0x01, when the local device does not support encryption.

Note: for encryption to be used, both devices must support and enable encryption.

Value	Parameter Description
0x00	Encryption not required.
0x01	Encryption required for all connections.
0x02-0xFF	Reserved.

Note: in the Connection Complete event the Encryption_Mode parameter will show whether encryption was successfully turned on. The remote device may not support encryption or may have set Encryption_Mode to 0x01 when the local device has not, so the encryption mode returned in the Connection Complete event may not equal the encryption mode set in the HCI_Write_Encryption_Mode Command.

10.10.3 Page Scan Mode

The Page_Scan_Mode parameter indicates the page scan mode that is used for default page scan. Currently one mandatory page scan mode and three optional page scan modes are defined. Following an inquiry response, if the Baseband timer T_mandatory_pscan has not expired, the mandatory page scan mode must be applied. For details see the “Baseband Specification” on page 57 [Part B] (Keyword: Page-Scan-Mode, FHS-Packet, T_mandatory_pscan)

Value	Parameter Description
0x00	Mandatory Page Scan Mode
0x01	Optional Page Scan Mode I
0x02	Optional Page Scan Mode II
0x03	Optional Page Scan Mode III
0x04-0xFF	Reserved

MESSAGE SEQUENCE CHARTS

Examples of interactions between Host Controller Interface Commands and Events and Link Manager Protocol Data Units are represented in the form of message sequence charts. The message sequence charts also present interaction examples of HCI with AMP (Alternate MAC and PHY) Controllers. These charts show typical interactions and do not indicate all possible protocol behavior.

CONTENTS

1 Introduction 739
1.1 Notation 739
1.2 Flow of Control 740
1.3 Example MSC 740
2 Services Without Connection Request 741
2.1 Remote Name Request 741
2.2 One-time Inquiry 743
2.3 Periodic Inquiry 745
3 ACL Connection Establishment and Detachment 747
3.1 Connection Setup 748
4 Optional Activities After ACL Connection Establishment 755
4.1 Authentication Requested 755
4.2 Simple Pairing Message Sequence Charts 756
4.2.1 Optional OOB Information Collection 756
4.2.2 Enable Simple Pairing 757
4.2.3 Connection Establishment 757
4.2.4 L2CAP Connection Request for a Secure Service 757
4.2.5 Optional OOB Information Transfer 758
4.2.6 Start Simple Pairing 758
4.2.7 IO Capability Exchange 759
4.2.8 Public Key Exchange 759
4.2.9 Authentication 760
4.2.10 Numeric Comparison 760
4.2.11 Numeric Comparison Failure on Initiating Side 761
4.2.12 Numeric Comparison Failure on Responding Side 762
4.2.13 Passkey Entry 763
4.2.14 Passkey Entry Failure on Responding Side 764
4.2.15 Passkey Entry Failure on Initiator Side 765
4.2.16 Out of Band 765
4.2.17 OOB Failure on Initiator Side 766
4.2.18 DHKey Checks 767
4.2.19 Calculate Link Key 767
4.2.20 Enable Encryption 768
4.2.21 L2CAP Connection Response 769
4.3 Link Supervision Timeout Changed Event 769
4.4 Set Connection Encryption 770

4.5 Change Connection Link Key 771
4.6 Change Connection Link Key with Encryption Pause and Resume 771
4.7 Master Link Key 773
4.8 Read Remote Supported Features 775
4.9 Read Remote Extended Features 775
4.10 Read Clock Offset 776
4.11 Role Switch on an Encrypted Link using Encryption Pause and Resume 776
4.12 Refreshing Encryption Keys 777
4.13 Read Remote Version Information 778
4.14 QOS Setup 778
4.15 Switch Role 779
4.16 AMP Physical Link Creation and Disconnect 780
4.16.1 Physical Link Establishment 781
4.16.2 Logical Link Creation 784
4.17 AMP Test Mode Sequence Charts 787
4.17.1 Discover the AMP Present and Running Transmitter and Receiver Tests 787

5 Synchronous Connection Establishment and Detachment 791
5.1 Synchronous Connection Setup 791

6 Sniff, Hold and Park 796
6.1 Sniff Mode 796
6.2 Hold Mode 797
6.3 Park State 799

7 Buffer Management, Flow Control 802

8 Loopback Mode 804
8.1 Local Loopback Mode 804
8.2 Remote Loopback Mode 806

9 List of Figures 808

1 INTRODUCTION

This section shows typical interactions between Host Controller Interface (HCI) Commands and Events and Link Manager (LM) Protocol Data Units (PDU) on the BR/EDR Controller. It focuses on the message sequence charts (MSCs) for the procedures specified in [3] " Host Controller Interface Functional Specification" with regard to LM Procedures from [2] "Link Manager Protocol" and PALs found in Volume 5.

This section illustrates only the most useful scenarios, it does not cover all possible alternatives. Furthermore, the message sequence charts do not consider errors over the air interface or host interface. In all message sequence charts it is assumed that all events are not masked, so the Host Controller will not filter out any events.

The sequence of messages in these message sequence charts is for illustrative purposes. The messages may be sent in a different order where allowed by the Link Manager, PAL, or HCI sections. If any of these charts differ with text in the Baseband, Link Manager, PAL, or HCI sections, the text in those sections shall be considered normative. This section is informative.

1.1 NOTATION

The notation used in the message sequence charts (MSCs) consists of ovals, elongated hexagons, boxes, lines, and arrows. The vertical lines terminated on the top by a shadow box and at the bottom by solid oval indicate a protocol entity that resides in a device. MSCs describe interactions between these entities and states those entities may be in.

The following symbols represent interactions and states:

Oval	Defines the context for the message sequence chart.
Hexagon	Indicates a condition needed to start the transactions below this hexagon. The location and width of the Hexagon indicates which entity or entities make this decision.
Box	Replaces a group of transactions. May indicate a user action, or a procedure in the baseband.
Dashed Box	Optional group of transactions.
Solid Arrow	Represents a message, signal or transaction. Can be used to show LMP and HCI traffic. Some baseband packet traffic is also shown. These are prefixed by BB followed by either the type of packet, or an indication that there is an ACK signal in a packet.
Dashed Arrow	Represents a optional message, signal or transaction. Can be used to show LMP and HCI traffic.

1.2 FLOW OF CONTROL

Some message sequences are split into several charts. These charts are marked in sequence with different step numbers with multiple paths through with optional letters after the step numbers. Numbers indicate normal or required ordering. The letters represent alternative paths. For example, Step 4 is after Step 3, and Step 5a could be executed instead of Step 5b.

1.3 EXAMPLE MSC

The protocol entities represented in the example shown in Figure 1.1 on page 740 illustrate the interactions of two devices named A and B. Note that each device includes a Host and a LM entity in this example. Other MSCs in this section may show the interactions of more than two devices.

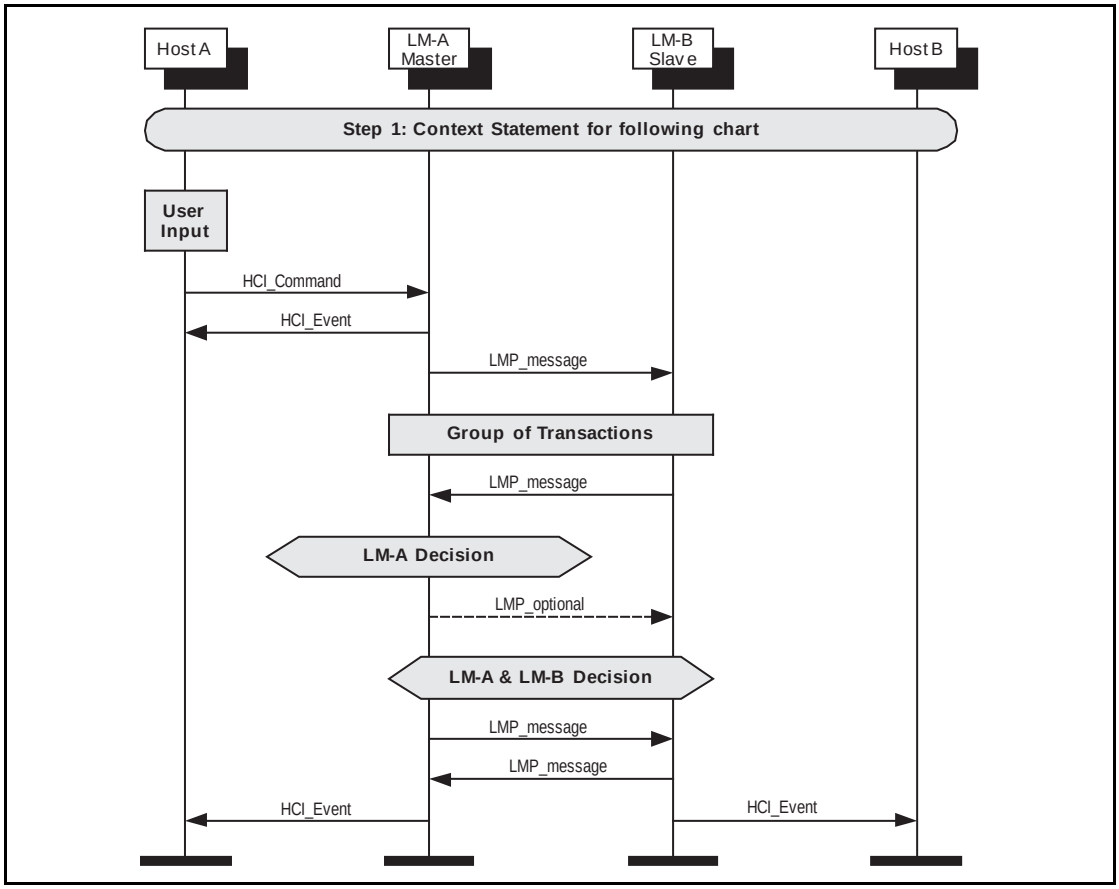

Figure 1.1: Example MSC.

2 SERVICES WITHOUT CONNECTION REQUEST

2.1 REMOTE NAME REQUEST

The service Remote Name Request is used to find out the name of the remote device without requiring an explicit ACL Connection.

Step 1: The host sends an HCI_Set_Event_Mask with the bit of Remote Host Supported Features Notification Event (0x1000000000000000) set and an HCI_Remote_Name_Request command expecting that its local device will automatically try to connect to the remote device. (See Figure 2.1 on page 741.)

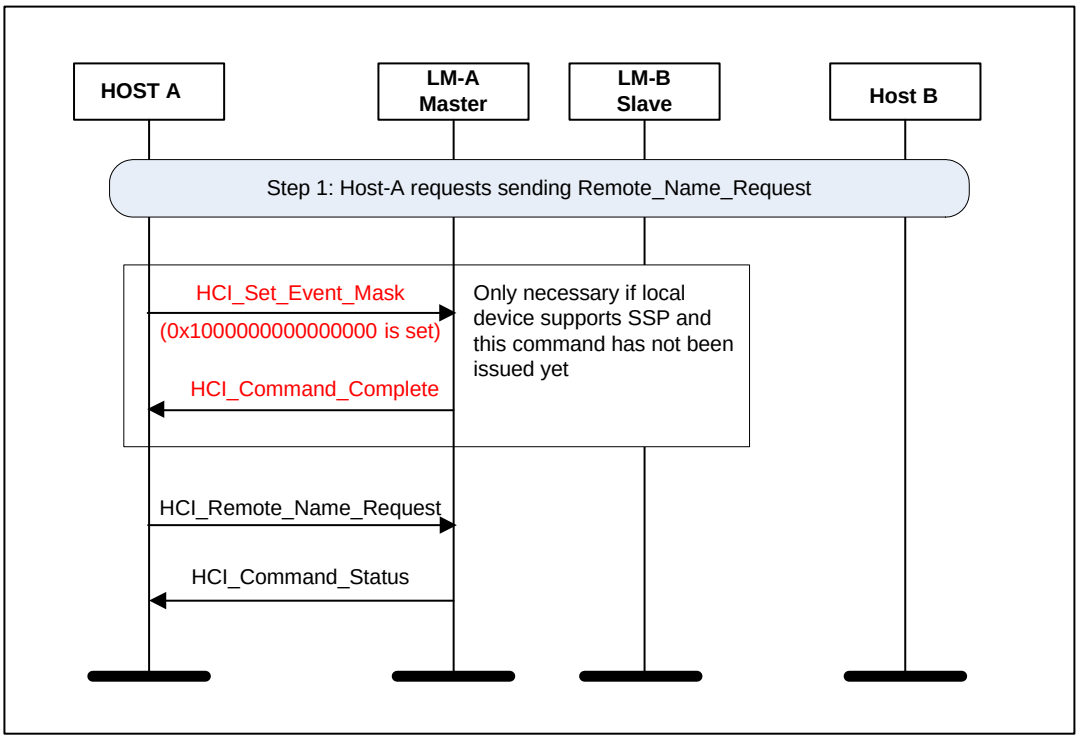

Figure 2.1: Remote name request.

Step 2a: If an ACL Connection does not exist device A pages device B. After the Baseband paging procedure, the local device attempts to get the remote device's extended features, send an HCI_Remote_Device_Supported_Features_Notification event, get the remote name, disconnect, and return the name of the remote device to the Host.(See Figure 2.2 on page 742.)

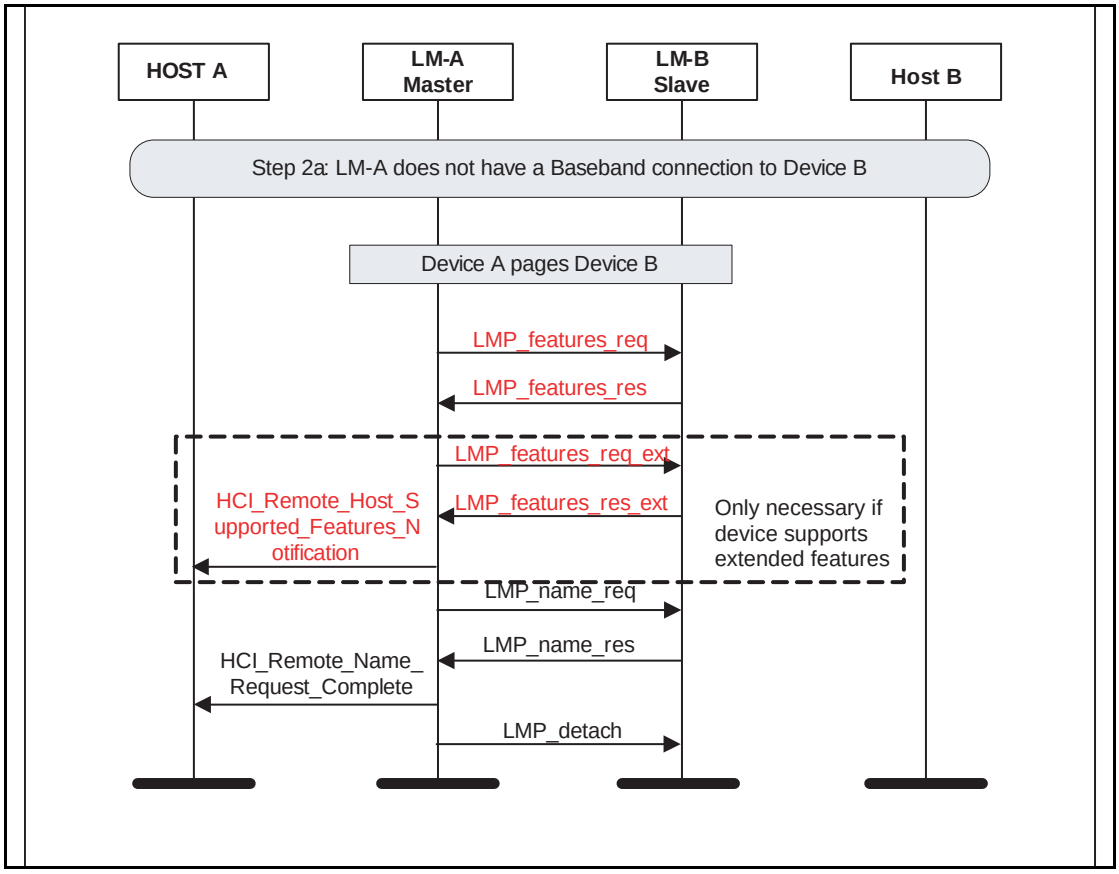

Figure 2.2: Remote name request if no current baseband connection.

Step 2b: If an ACL Connection exists when the request is made, then the Remote Name Request procedure will be executed like an optional service. No Paging and no ACL disconnect is done. (See Figure 2.3 on page 743.)

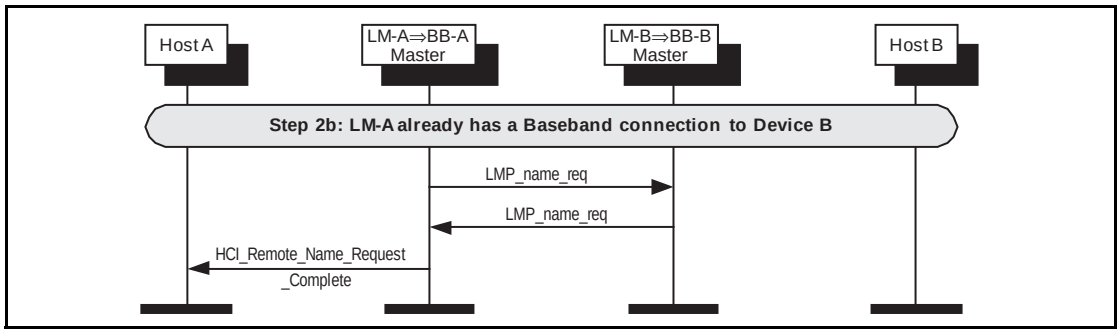

Figure 2.3: Remote name request with baseband connection.

2.2 ONE-TIME INQUIRY

Inquiry is used to detect and collect nearby devices.

Step 1: The host sends an HCI_Inquiry command. (See Figure 2.4 on page 743.)

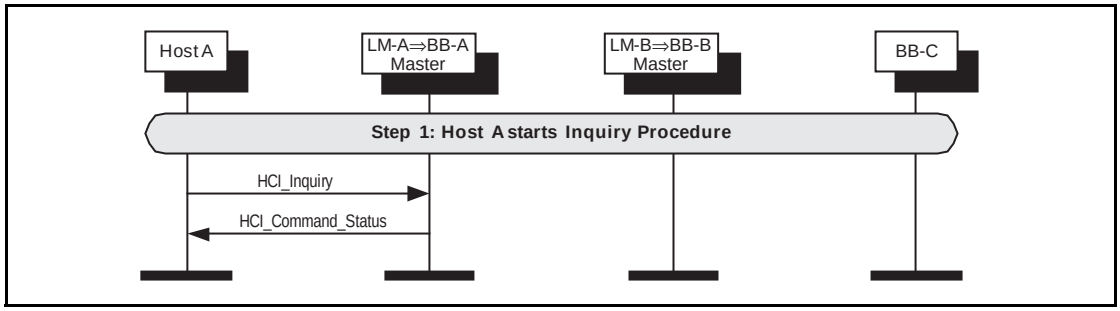

Figure 2.4: Host A starts inquiry procedure.

Step 2: The Controller will start the Baseband inquiry procedure with the specified Inquiry Access Code and Inquiry Length. When Inquiry Responses are received, the Controller extracts the required information and returns the information related to the found devices using one or more Inquiry Result events to the Host. (See Figure 2.5 on page 744.)

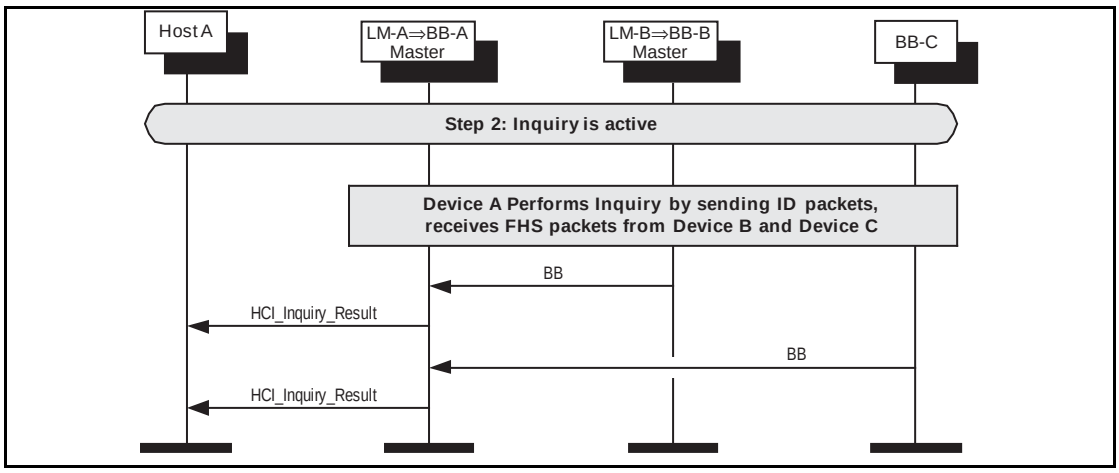

Figure 2.5: LM-A performs inquiry and reports result.

Step 3a: If the host wishes to terminate an Inquiry, the HCI_Inquiry_Cancel command is used to immediately stop the inquiry procedure.
(See Figure 2.6 on page 744.)

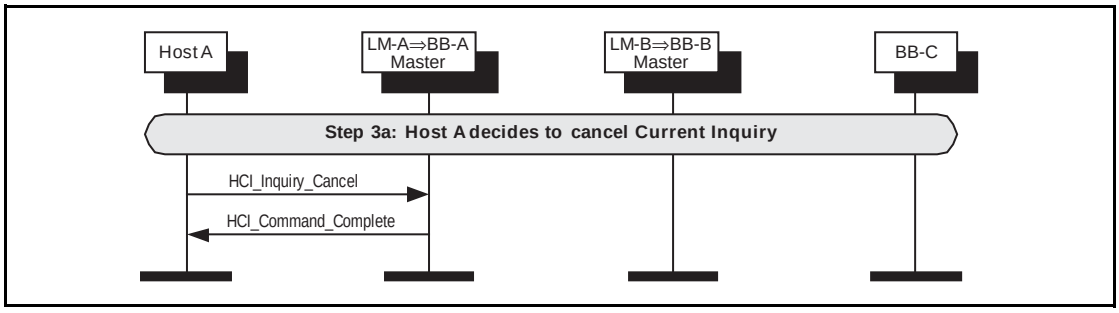

Figure 2.6: Host A cancels inquiry.

Step 3b: If the Inquiry procedure is completed due to the number of results obtained, or the Inquiry Length has expired, an Inquiry Complete event is returned to the Host. (See Figure 2.7 on page 745.)

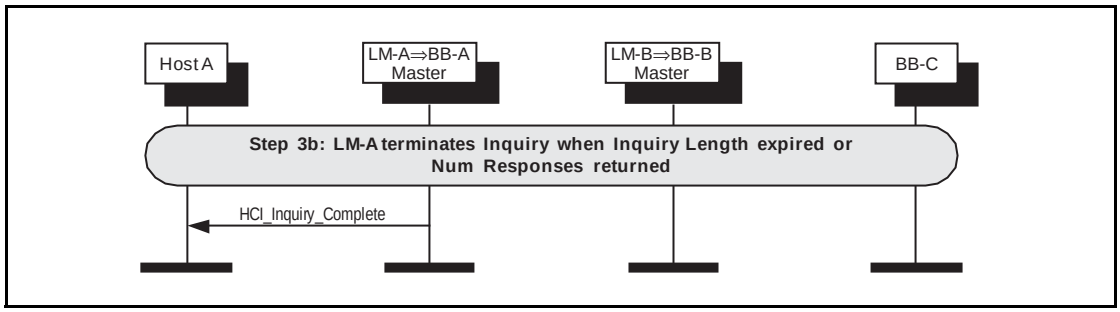

Figure 2.7: LM-A terminates current inquiry.

2.3 PERIODIC INQUIRY

Periodic inquiry is used when the inquiry procedure is to be repeated periodically.

Step 1: The hosts sends an HCI_Periodic_Inquiry_Mode command. (See Figure 2.8 on page 745.)

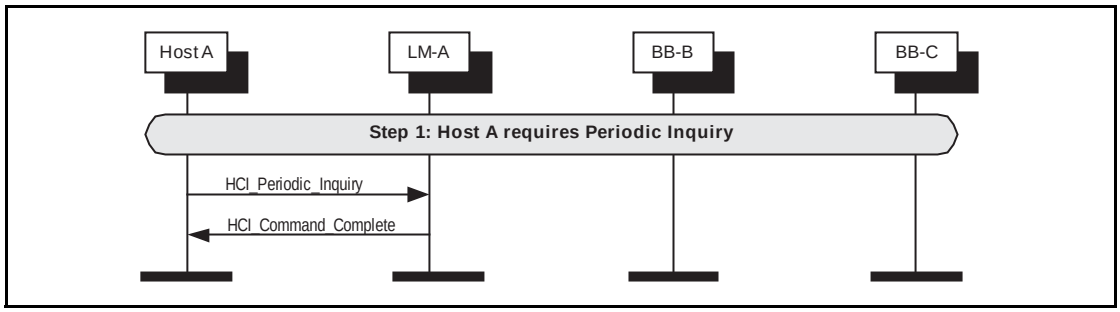

Figure 2.8: Host A starts periodic inquiry.

Step 2: The Controller will start a periodic Inquiry. In the inquiry cycle, one or several Inquiry Result events will be returned. (See Figure 2.9 on page 746.)

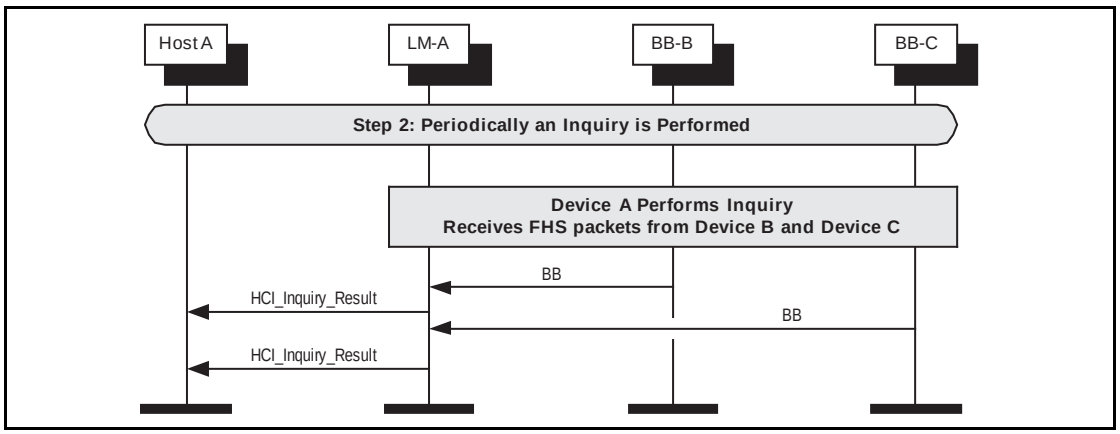

Figure 2.9: LM-A periodically performs an inquiry and reports result.

Step 3: An Inquiry Complete event will be returned to the Host when the current periodic inquiry has finished. (See Figure 2.10 on page 746.)

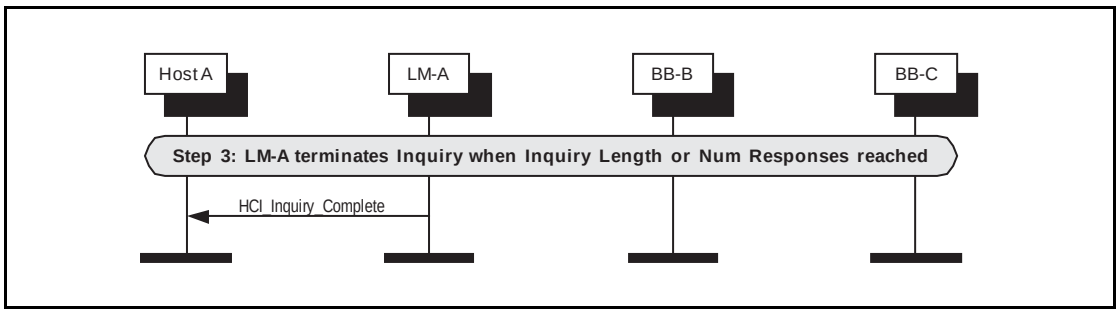

Figure 2.10: LM-A terminates current inquiry.

Step 4: The periodic Inquiry can be stopped using the HCI_Exit_Periodic_Inquiry_Mode command. (See Figure 2.11 on page 746.)

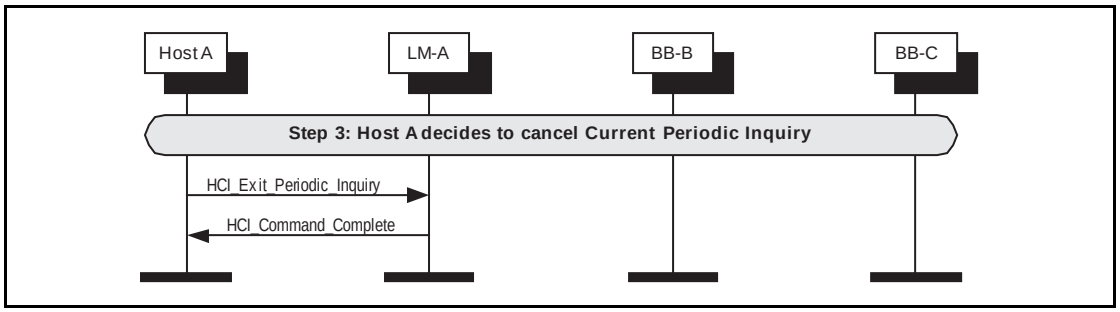

Figure 2.11: Host A decides to exit periodic inquiry.

3 ACL CONNECTION ESTABLISHMENT AND DETACHMENT

A flow diagram of the establishment and detachment of a connection between two devices is shown in Figure 3.1 on page 747. The process is illustrated in 9 distinct steps. A number of these steps may be optionally performed, such as authentication and encryption. Some steps are required, such as the Connection Request and Setup Complete steps. The steps in the overview diagram directly relate to the steps in the following message sequence charts.

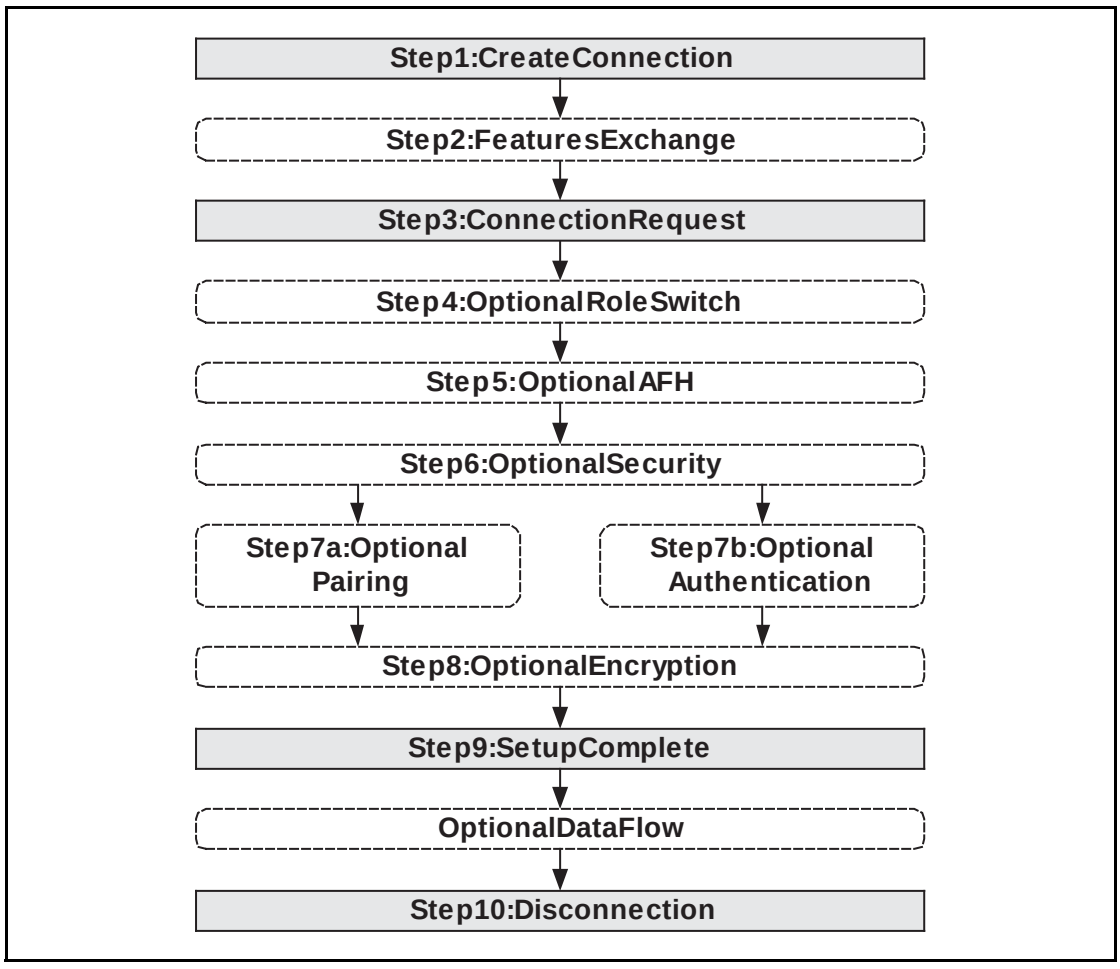

Figure 3.1: Overview diagram for connection setup.

3.1 CONNECTION SETUP

Step 1: The host sends an HCI_Create_Connection command to the Controller. The Controller then performs a Baseband paging procedure with the specified BD_ADDR. (See Figure 3.2 on page 748.)

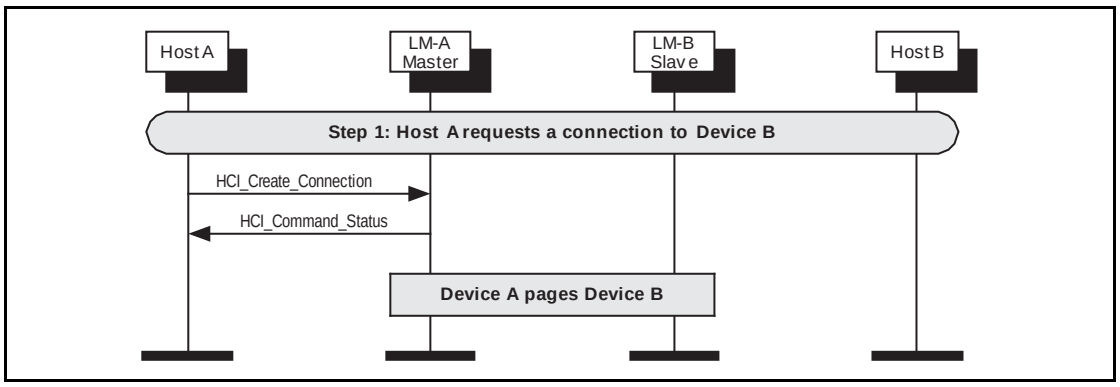

Figure 3.2: Host A requests connection with device B.

Step 2: Optionally, the LM may decide to exchange features. (See Figure 3.3 on page 748.)

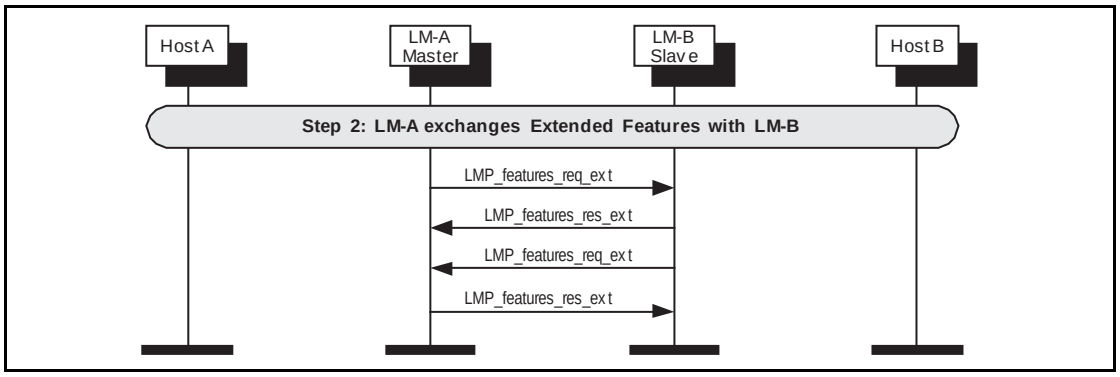

Figure 3.3: LM-A and LM-B exchange features.

Step 3: The LM on the master will request an LMP_host_connection_req PDU. The LM on the slave will then confirm that a connection is OK, and if so, what role is preferred. (See Figure 3.4 on page 748)

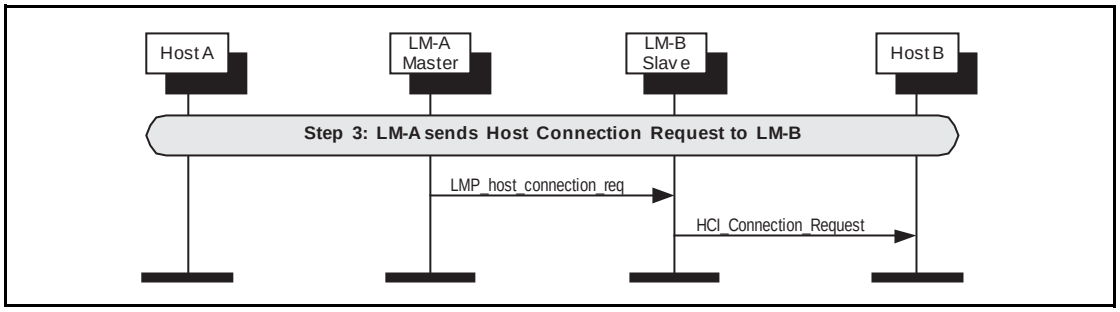

Figure 3.4: LM-A requests host connection.

Step 4a: The remote host rejects this connection, and the link is terminated. (See Figure 3.5 on page 749.)

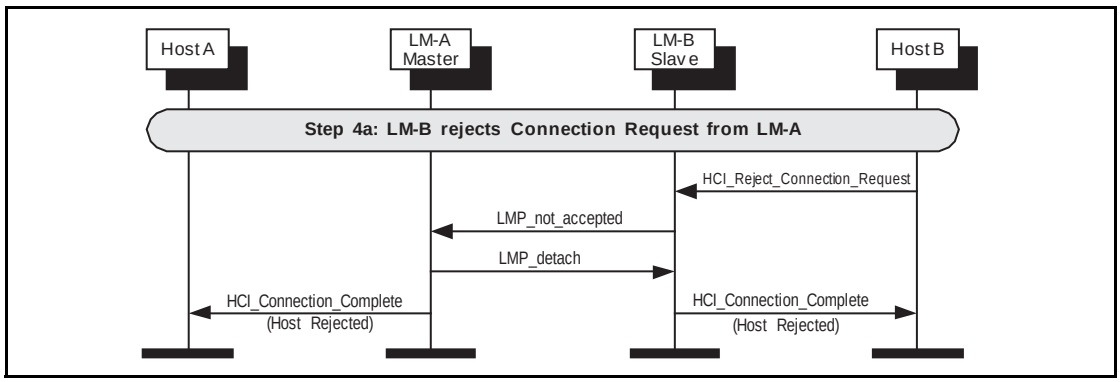

Figure 3.5: Device B rejects connection request.

Step 4b: The remote host accepts this connection. (See Figure 3.6 on page 749.)

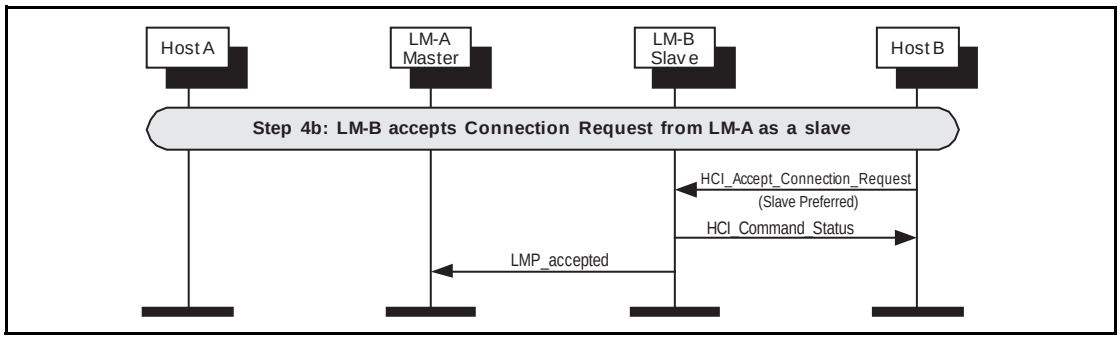

Figure 3.6: Device B accepts connection request.

Step 4c: The remote host accepts this connection but with the preference of being a master. This will cause a role switch to occur before the LMP_accepted for the LMP_host_connection_req PDU is sent. (See Figure 3.7 on page 750.)

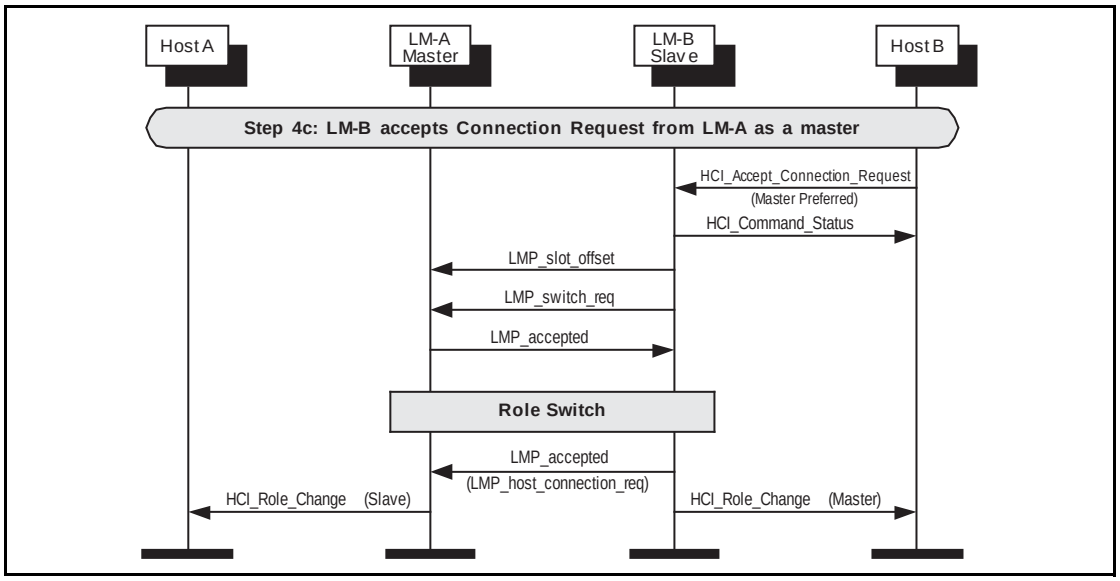

Figure 3.7: Device B accepts connection requests as master.

Step 5: After the features have been exchanged and AFH support is determined to be available, the master may at any time send an LMP_set_AFH and LMP_channel_classification_req PDU. (See Figure 3.8 on page 750.)

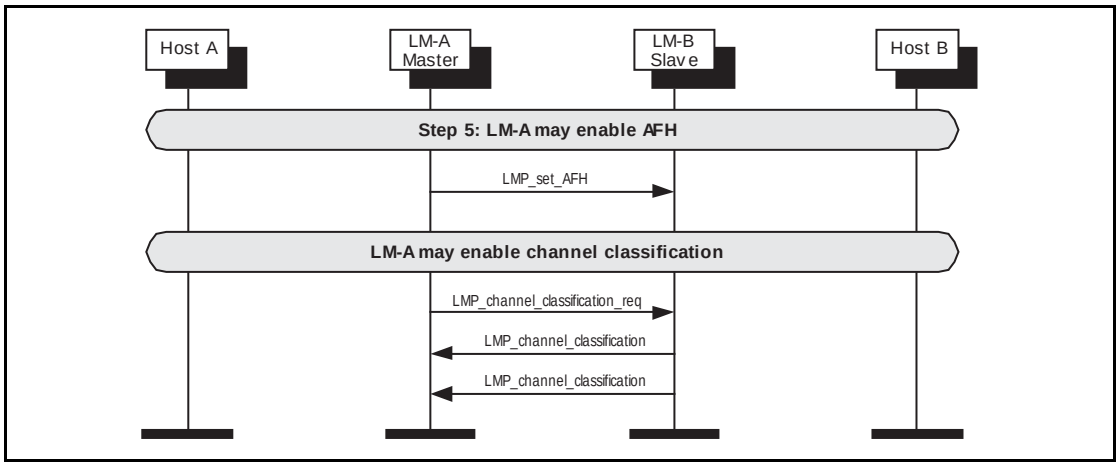

Figure 3.8: LM-A starts adaptive frequency hopping.

Step 6: The LM will request if authentication is required. It does this by requesting the Link Key for this connection from the Host. (See Figure 3.9 on page 751.)

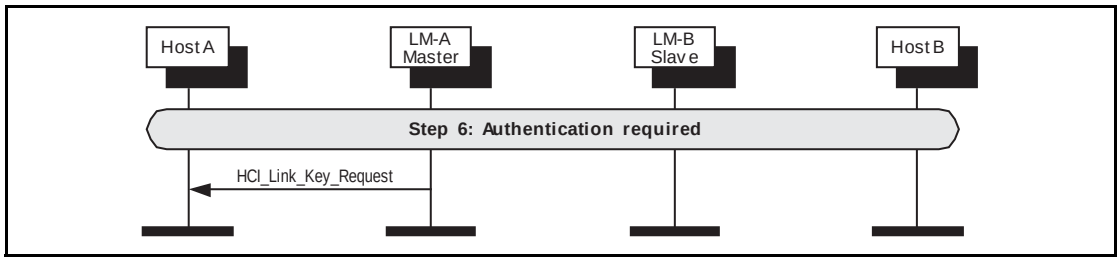

Figure 3.9: Authentication initiated.

Step 7a: If authentication is required by the higher layers and the devices to be connected do not have a common link key, a pairing procedure will be used. The LM will have requested a link key from the host for this connection. If there is a negative reply, then a PIN code will be requested. This PIN code will be requested on both sides of the connection, and authentication performed based on this PIN code. The last step is for the new link key for this connection to be passed to the host so that it may store it for future connections.
(See Figure 3.10 on page 752.)

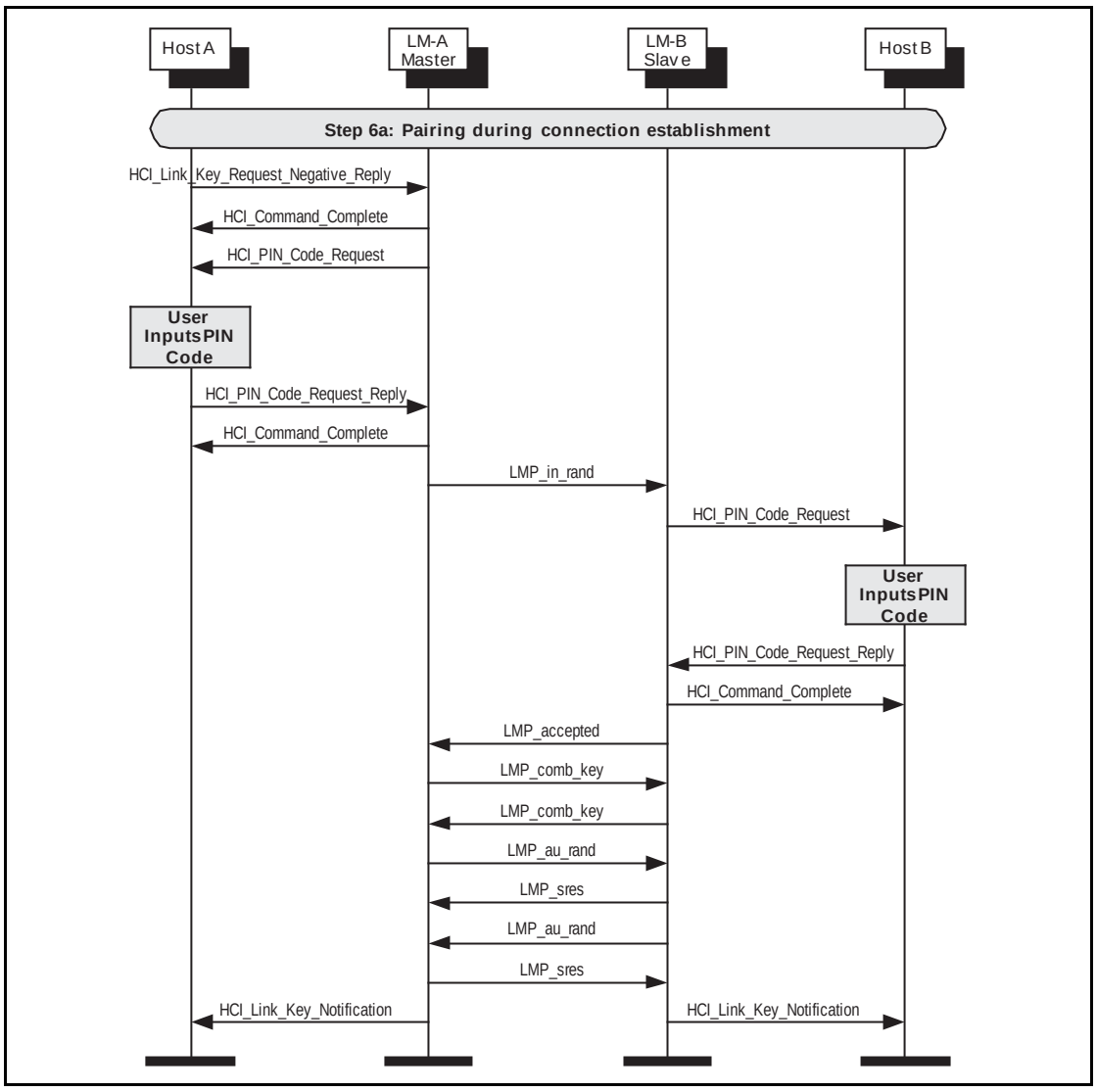

Figure 3.10: Pairing during connection setup.

Step 7b: If a common link key exists between the devices, then pairing is not needed. The LM will have asked for a link key from the host for this connection. If this is a positive reply, then the link key is used for authentication. If the configuration parameter Authentication_Enable is set, then the authentication procedure must be executed. This MSC only shows the case when Authentication_Enable is set on both sides. (See Figure 3.11.)

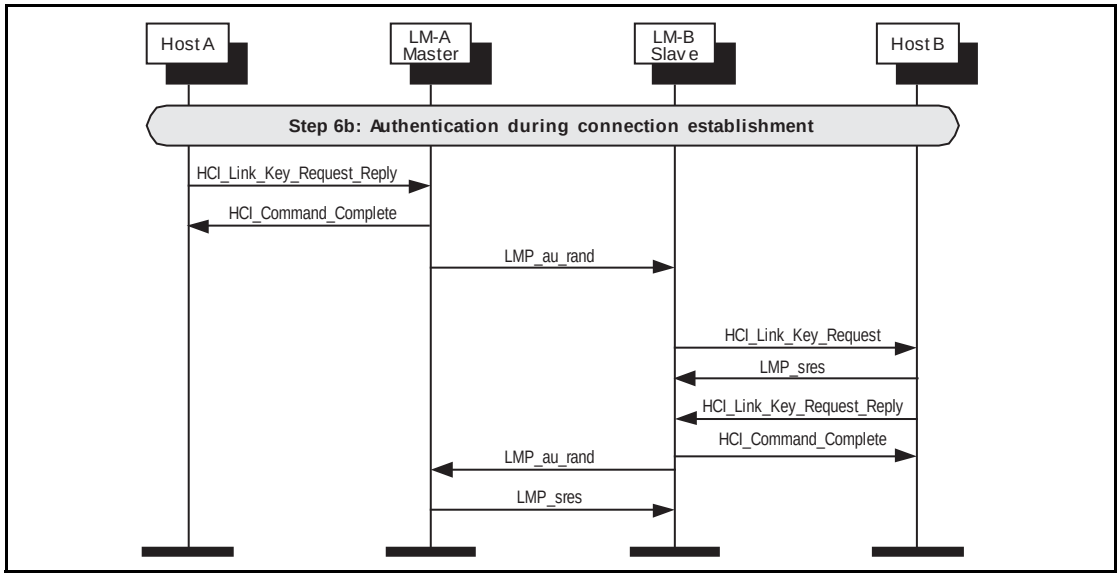

Figure 3.11: Authentication during connection setup.

Step 8: Once the pairing or authentication procedure is successful, the encryption procedure may be started. This MSC only shows the set up of an encrypted point-to-point connection. (See Figure 3.12.)

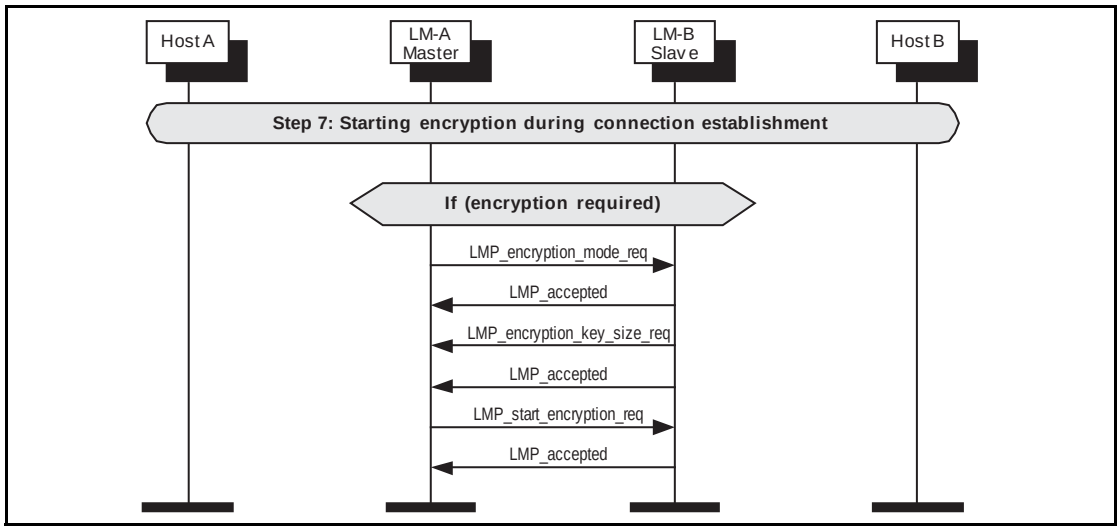

Figure 3.12: Starting encryption during connection setup.

Step 9: The LMs indicate that the connection is setup by sending LMP_setup_complete PDU. This will cause the Host to be notified of the new connection handle, and this connection may be used to send higher layer data such as L2CAP information. (See Figure 3.13 on page 754.)

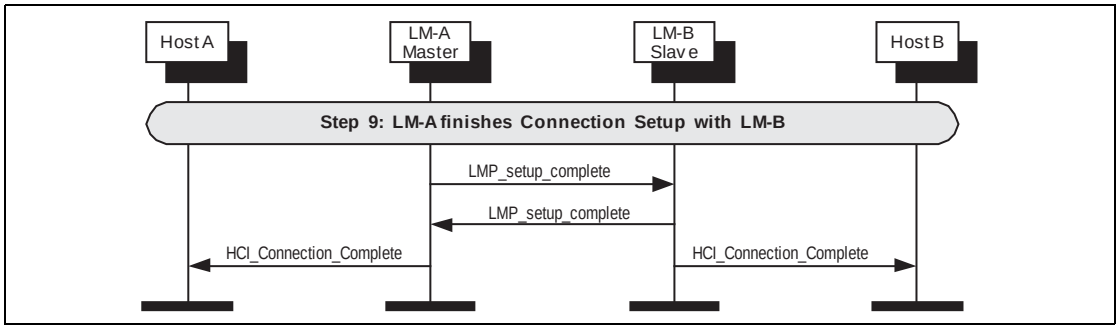

Figure 3.13: LM-A and LM-B finishes connection setup.

Step 10: Once the connection is no longer needed, either device may terminate the connection using the HCI_Disconnect command and LMP_detach message PDU. The disconnection procedure is one-sided and does not need an explicit acknowledgment from the remote LM. The use of ARQ Acknowledgment from the Baseband is needed to ensure that the remote LM has received the LMP_detach PDU. (See Figure 3.13 on page 754.)

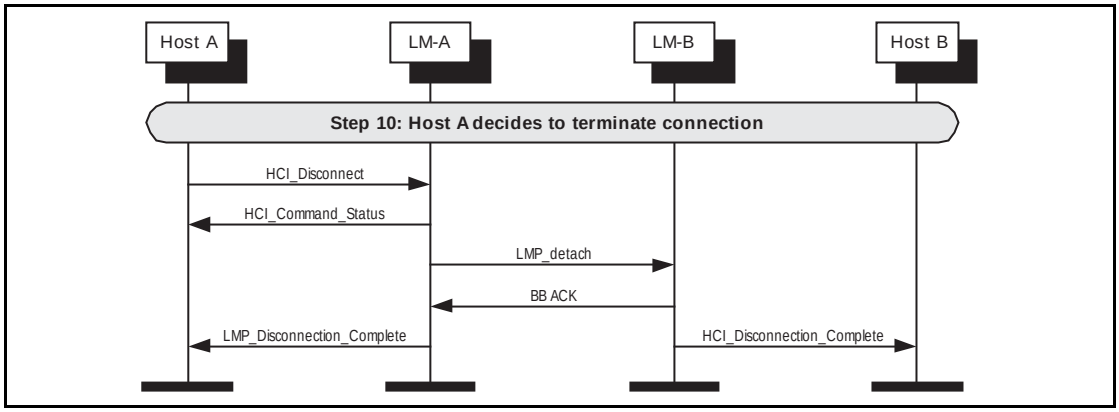

Figure 3.14: Host A decides to disconnect.

4 OPTIONAL ACTIVITIES AFTER ACL CONNECTION ESTABLISHMENT

4.1 AUTHENTICATION REQUESTED

Step 1: Authentication can be explicitly executed at any time after a connection has been established. If no Link Key is available then the Link Key is required from the Host. (See Figure 4.1 on page 755.)

Note: If the Controller or LM and the Host do not have the Link Key a PIN Code Request event will be sent to the Host to request a PIN Code for pairing. A procedure identical to that used during Connection Setup (Section 3.1, Step 7a:) will be used. (See Figure 3.9 on page 751.)

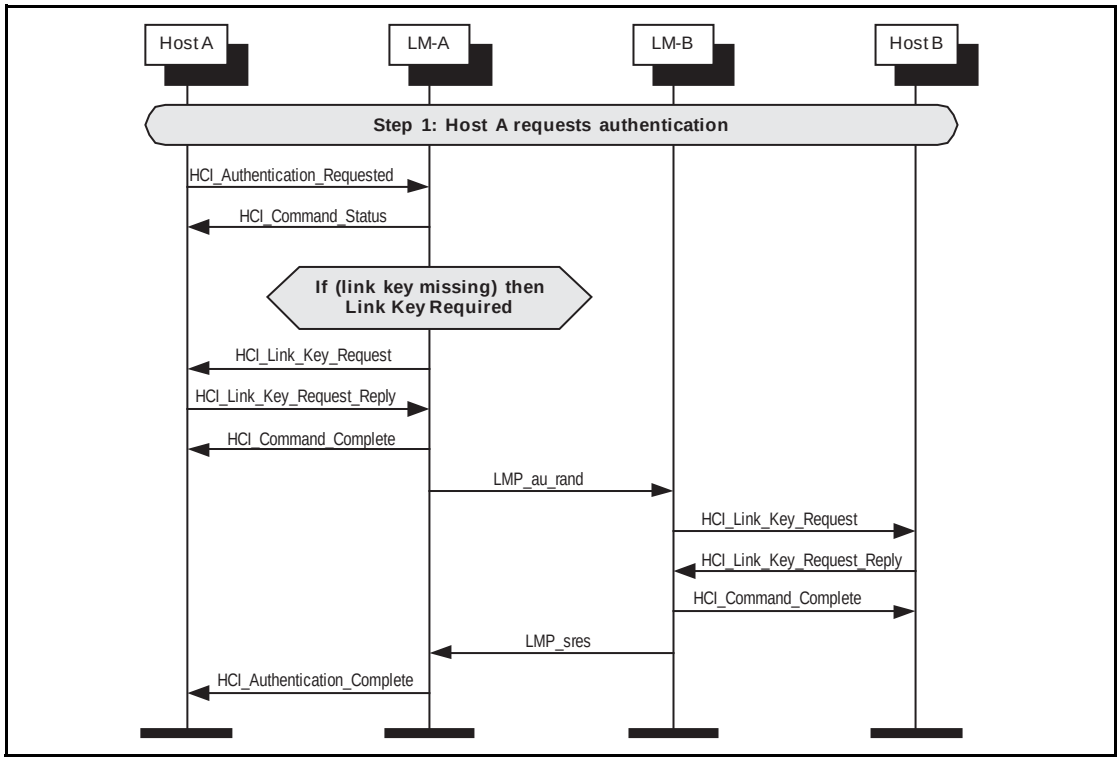

Figure 4.1: Authentication requested.

4.2 SIMPLE PAIRING MESSAGE SEQUENCE CHARTS

A flow diagram of simple pairing between two devices is shown in Figure 4.2. The process is illustrated in 11 distinct steps. A number of these steps have a number of different options.

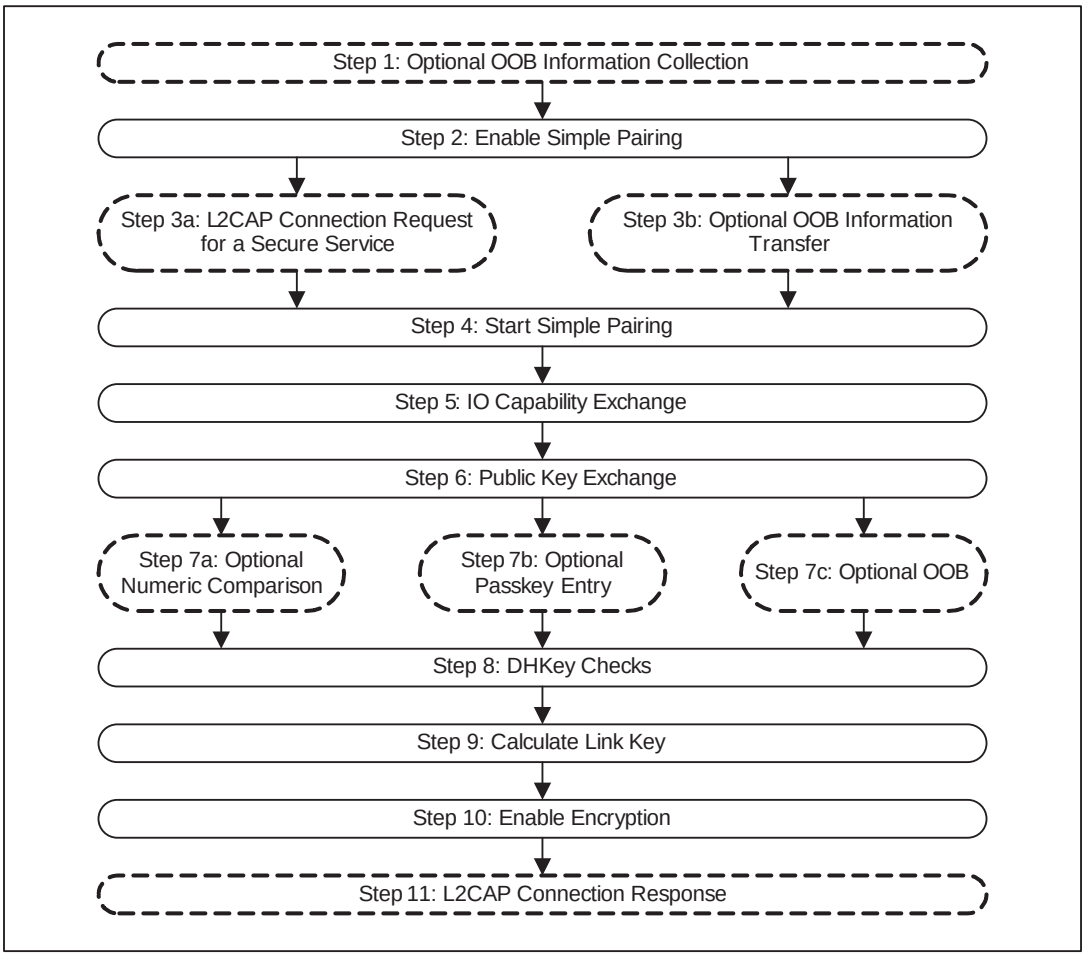

Figure 4.2: Simple Pairing Flow Diagram

4.2.1 Optional OOB Information Collection

If a device supports OOB information exchange, then the Host should request the C and R values from the controller that need to be sent by OOB. It is then assumed that the host transfers this information to the OOB system. Note: This could occur a long time before, for example at the factory for a passive tag.

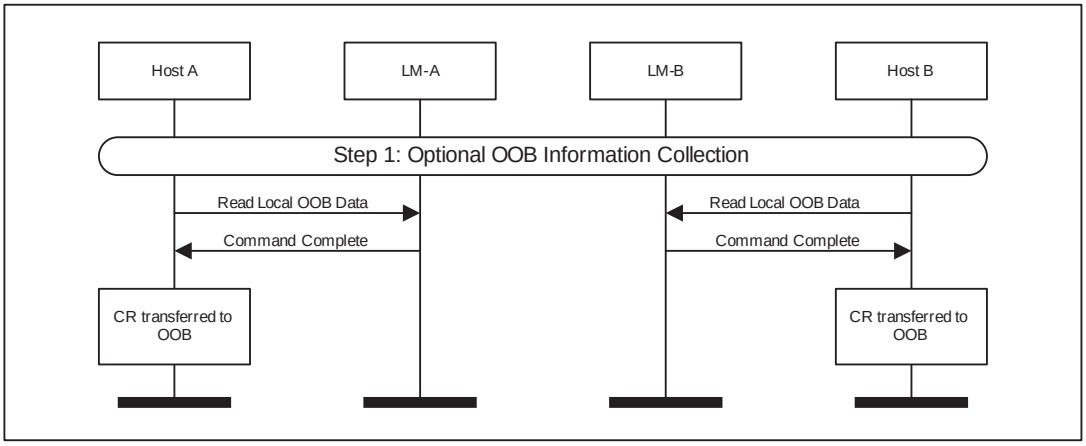

Figure 4.3: Optional OOB Information Collection

4.2.2 Enable Simple Pairing

To enable simple pairing, a device must use the Write Simple Pairing Mode command. This should be done before any other connections that may use simple pairing are created.

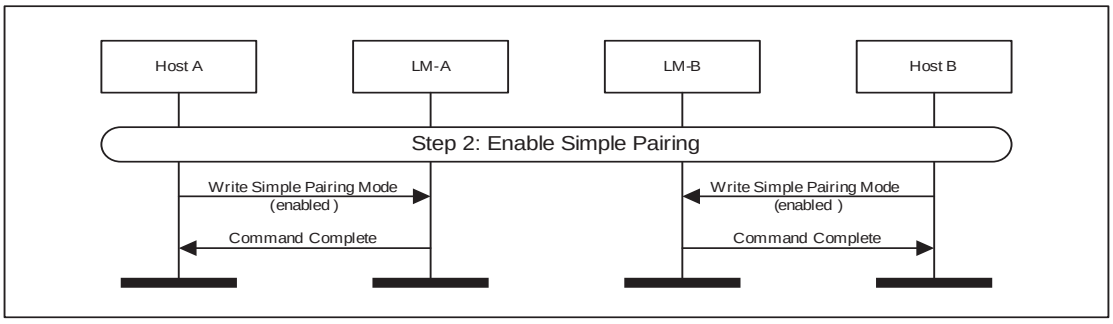

Figure 4.4: Enable Simple Pairing

4.2.3 Connection Establishment

Simple pairing, once it is enabled, is triggered by one of two possible actions. It could be triggered by an L2CAP connection request to a service that requires security, or it could be triggered by an OOB transfer of information.

4.2.4 L2CAP Connection Request for a Secure Service

Once a connection has been established between two devices, if a device requests an L2CAP connection to a service that requires authentication and encryption, then the device will start simple pairing.

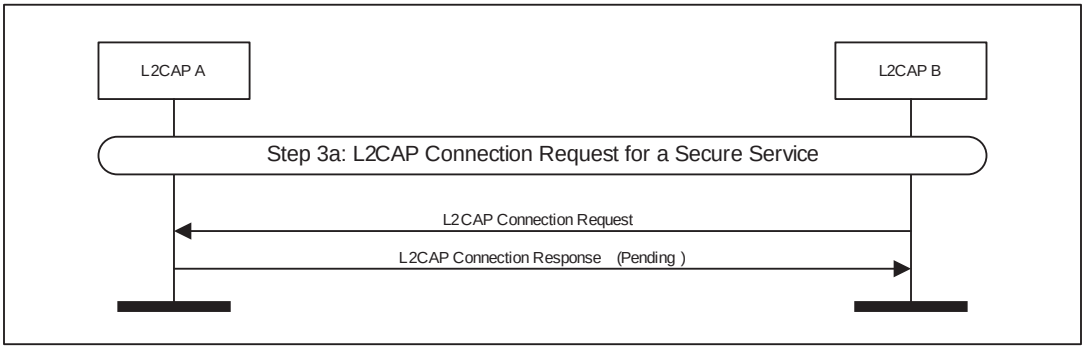

Figure 4.5: L2CAP Connection Request for a Secure Service

4.2.5 Optional OOB Information Transfer

Even if a Bluetooth connection has not been established between two devices, an OOB transfer can occur that transfers the Bluetooth Device Address of the device, and other OOB information for authentication. If an OOB transfer occurs, then the host can start simple pairing.

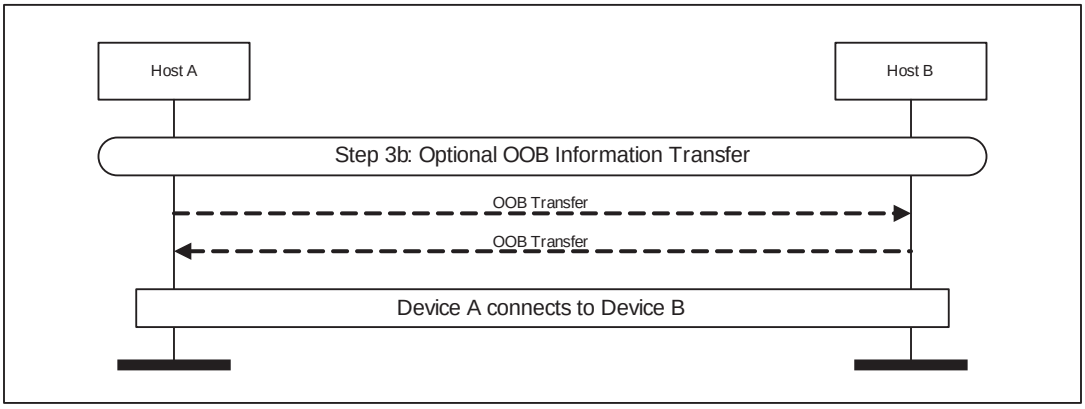

Figure 4.6: Optional OOB Information Transfer

4.2.6 Start Simple Pairing

Once the host has determined that simple pairing should start, it issues an Authentication Requested command to the controller. This will cause the controller to generate a request for a link key. If the host has a link key for this connection, then pairing is not required, and the link key can be used immediately once it has been authenticated. Simple Pairing will only be used if a Link_Key_Request_Negative_Reply Command is sent from the Host to the Controller on the initiating side.

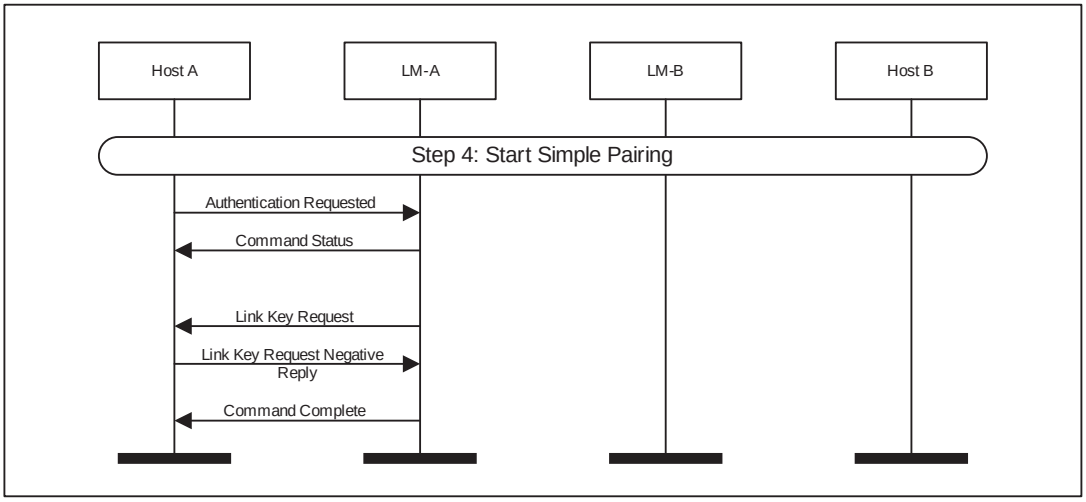

Figure 4.7: Start Simple Pairing

4.2.7 IO Capability Exchange

To be able to determine the correct authentication algorithm to use, the input / output capabilities of the two devices are exchanged.

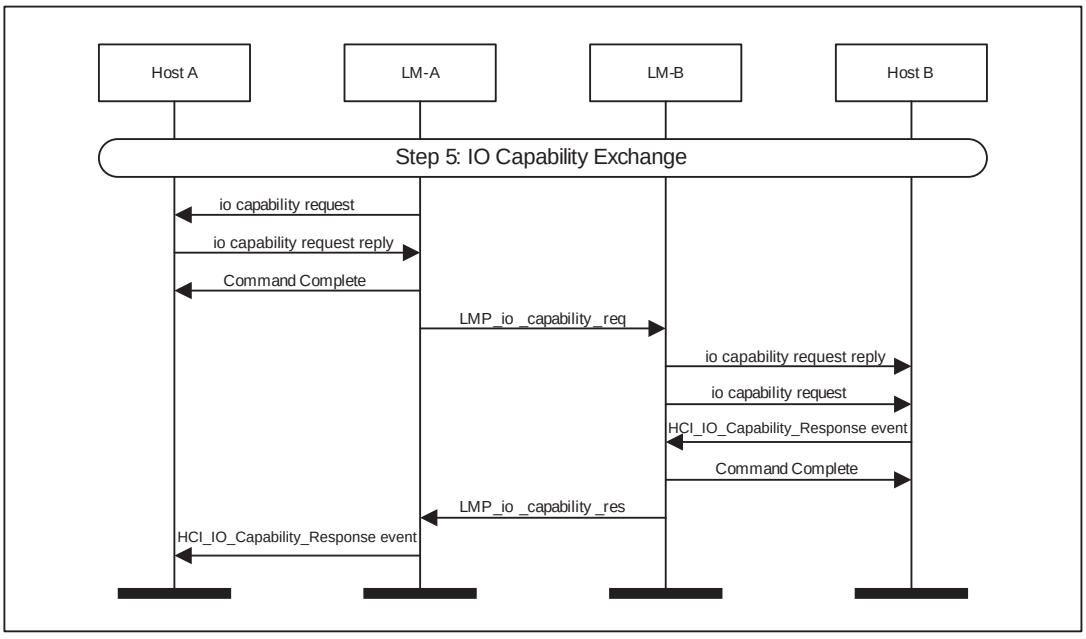

Figure 4.8: IO Capability Exchange

4.2.8 Public Key Exchange

Next the public keys are exchanged between the two devices. Once a device has received the public key of the peer device, it can start to calculate the Diffie Hellman Key (DHKey). This may take a long time, and should be started early, so that user interaction can hide the calculation time. The DHKey is not required until step 8.

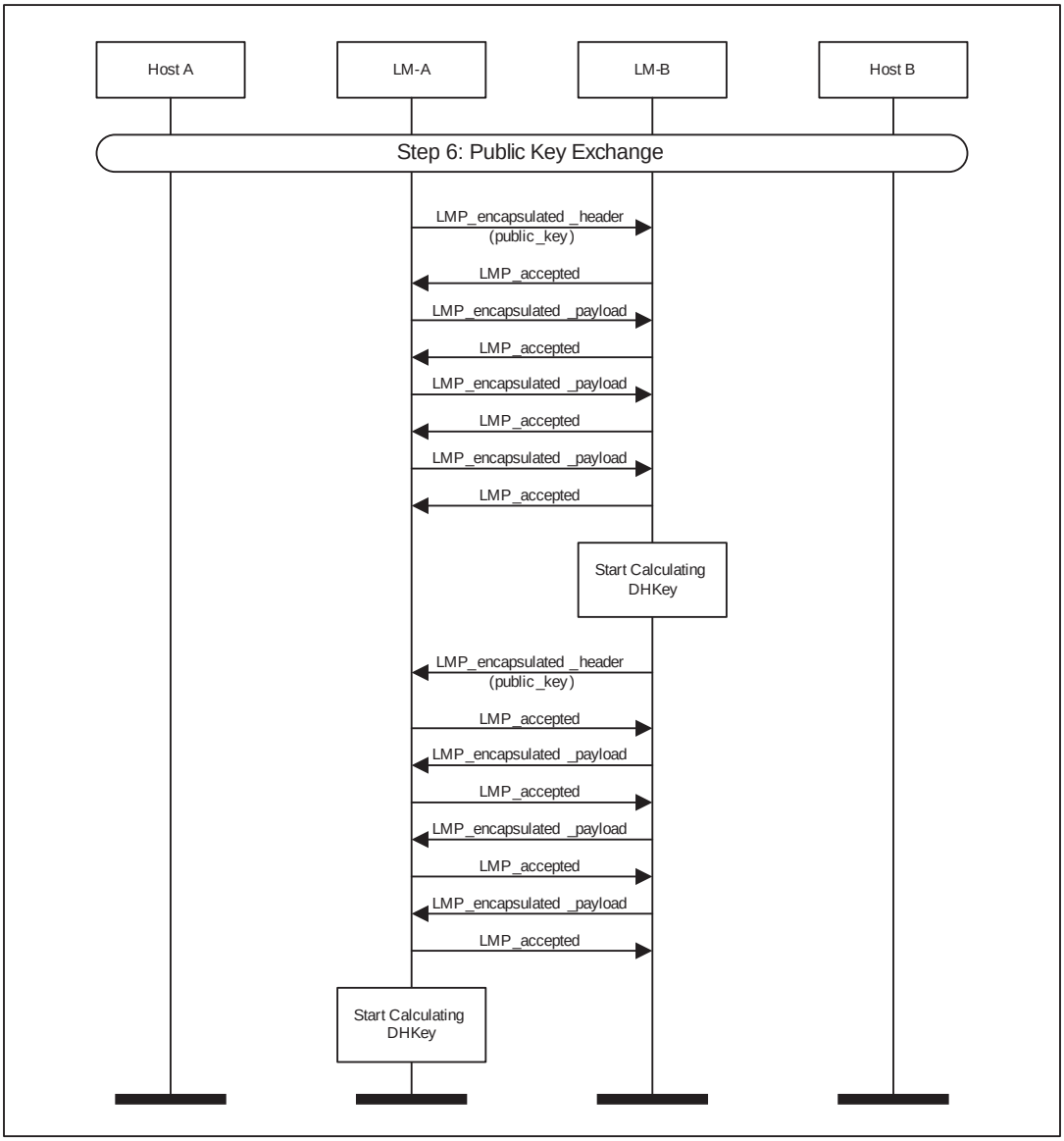

Figure 4.9: Public Key Exchange

4.2.9 Authentication

A device can be authenticated by using one of three algorithms. The choice of algorithm is determined by the combination of the IO capabilities of the two devices.

4.2.10 Numeric Comparison

The numeric comparison step will be done when both devices have output capabilities, or if one of the devices has no input or output capabilities. If both devices have output capabilities, this step requires the displaying of a user confirmation value. This value should be displayed until the end of step 8. If one or both devices do not have output capabilities, the same protocol is used but the Hosts will skip the step asking for the user confirmation.

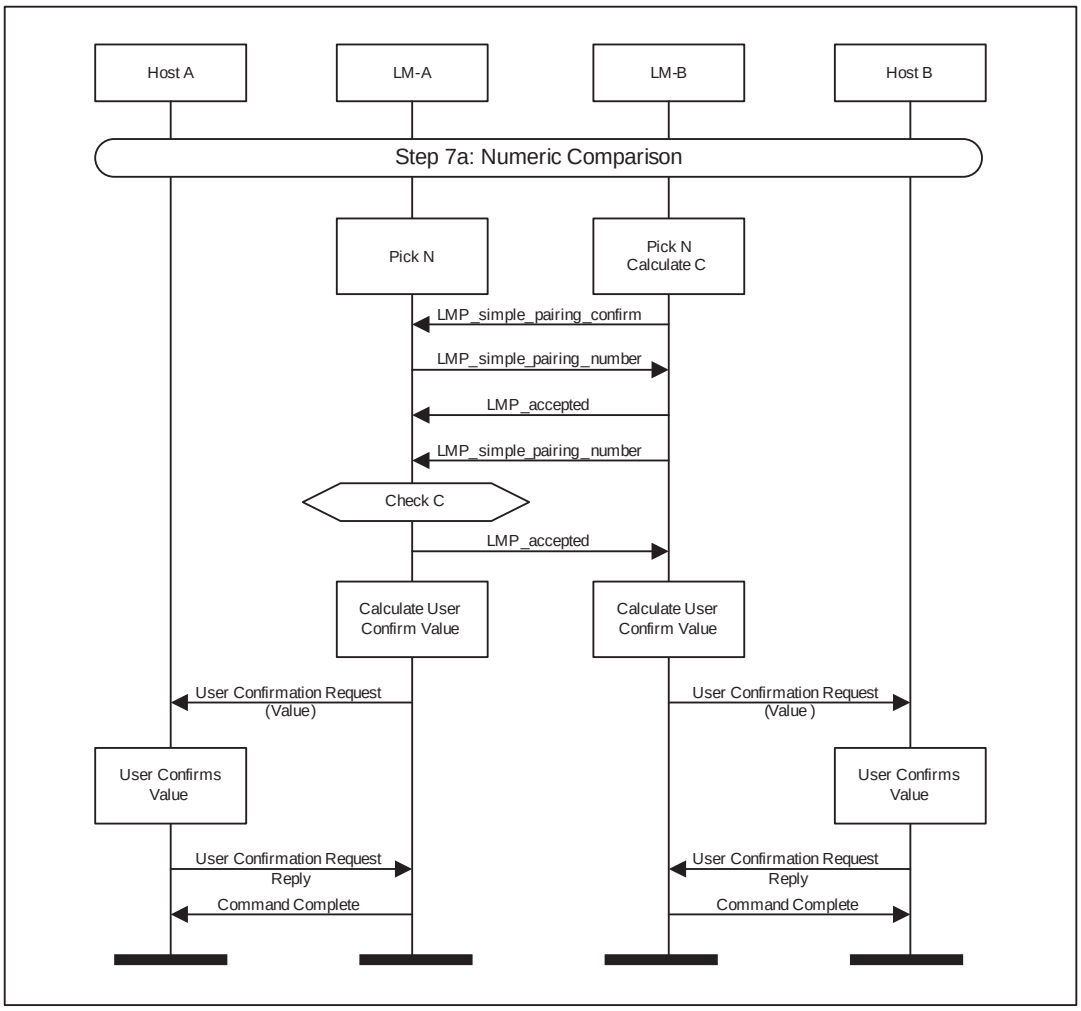

Figure 4.10: Numeric Comparison Authentication

4.2.11 Numeric Comparison Failure on Initiating Side

If the numeric comparison fails on the initiating side due to the user indicating that the confirmation values do not match, Simple Pairing is terminated.

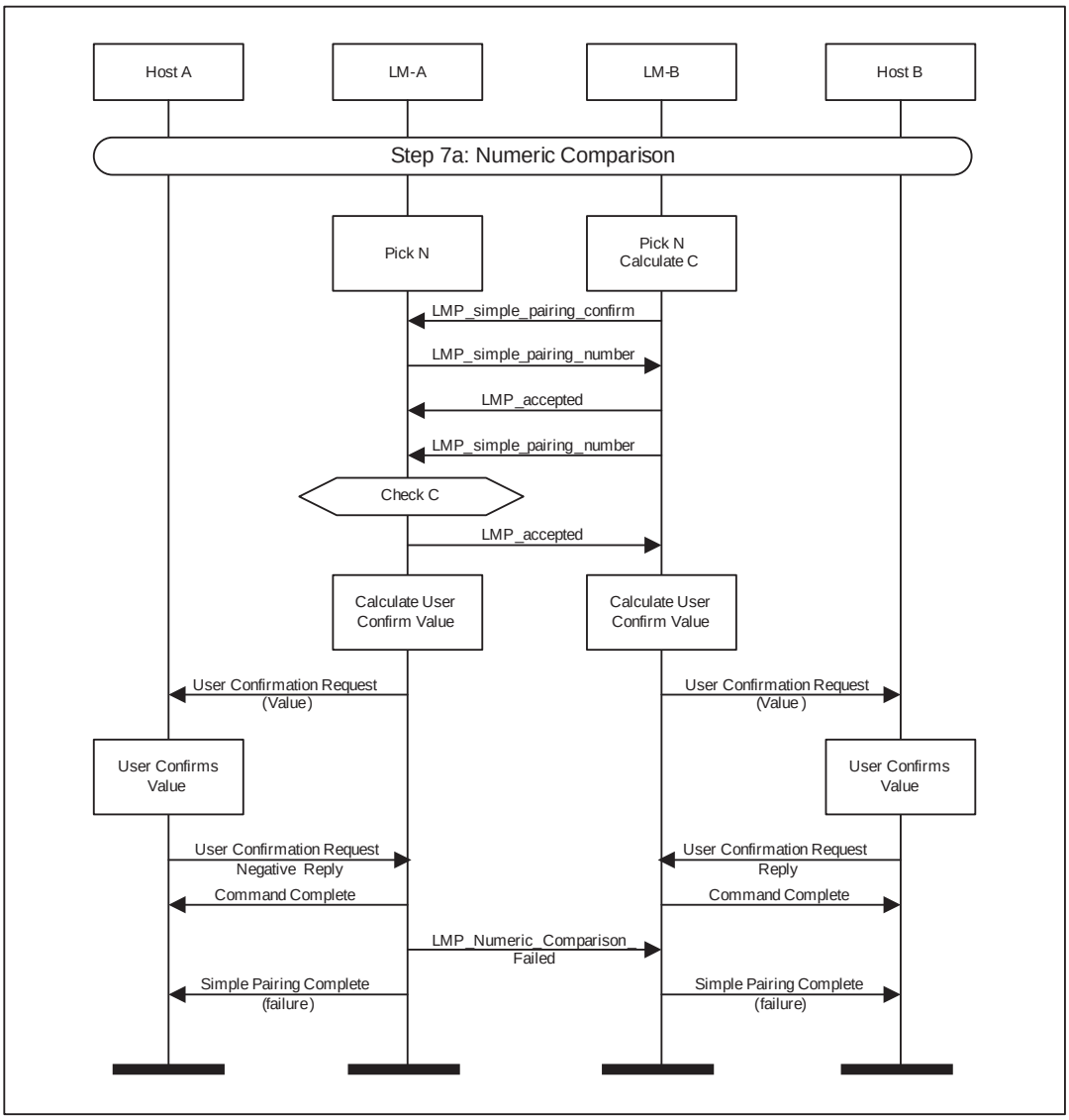

Figure 4.11: Numeric Comparison Authentication (Failure on Initiating Side)

4.2.12 Numeric Comparison Failure on Responding Side

If the numeric comparison fails on the responding side due to the user indicating that the confirmation values do not match, Simple Pairing is terminated.

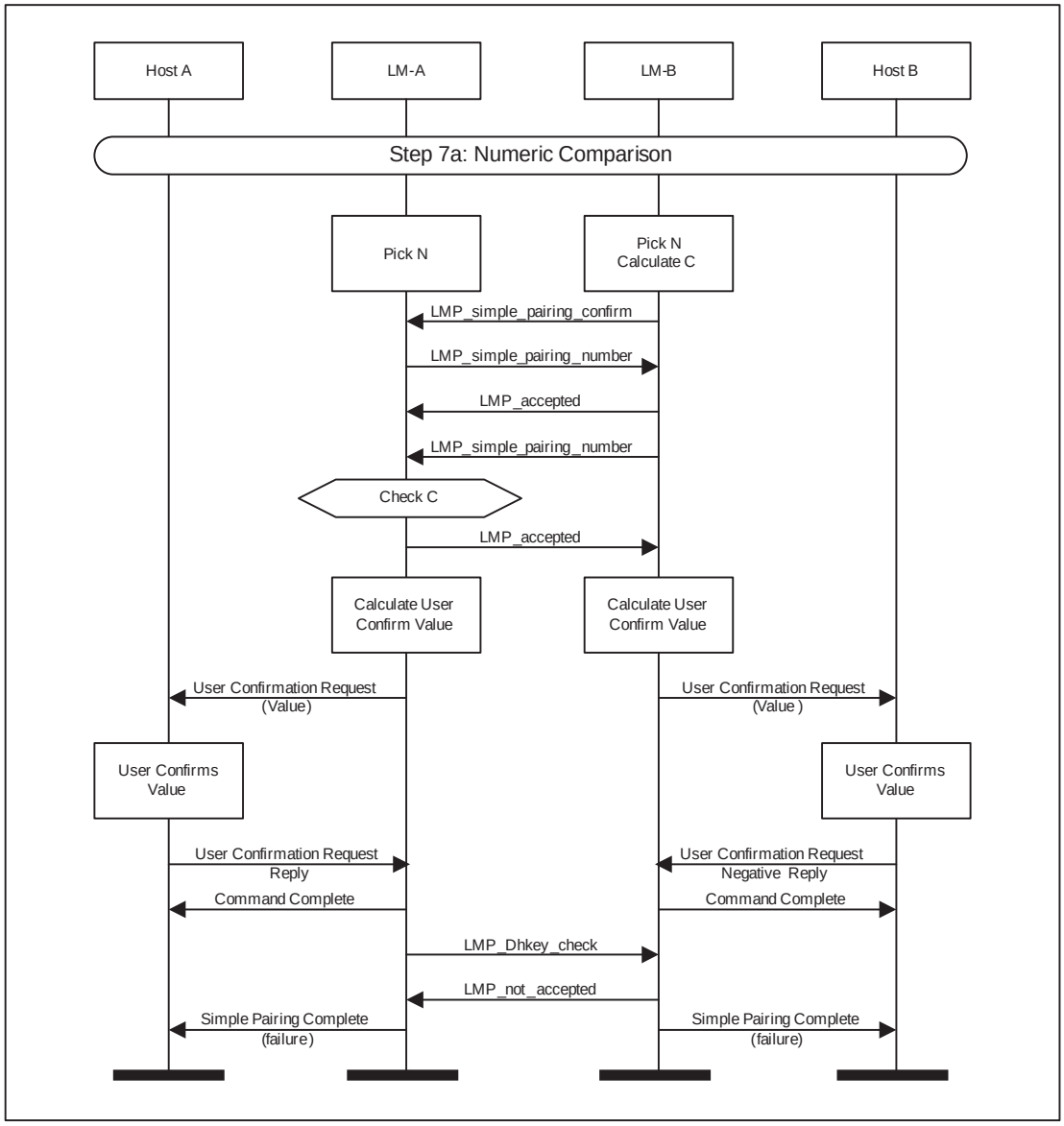

Figure 4.12: Numeric Comparison Failure on Responding Side

4.2.13 Passkey Entry

The Passkey entry step is used in two cases: when one device has numeric input only and the other device has either a display or numeric input capability or when both devices only have numeric input capability. In this step, one device display a number to be entered by the other device or the user enters a number on both devices. This number should be displayed until the end of step 8. Key press notification messages are shown during the user input phase.

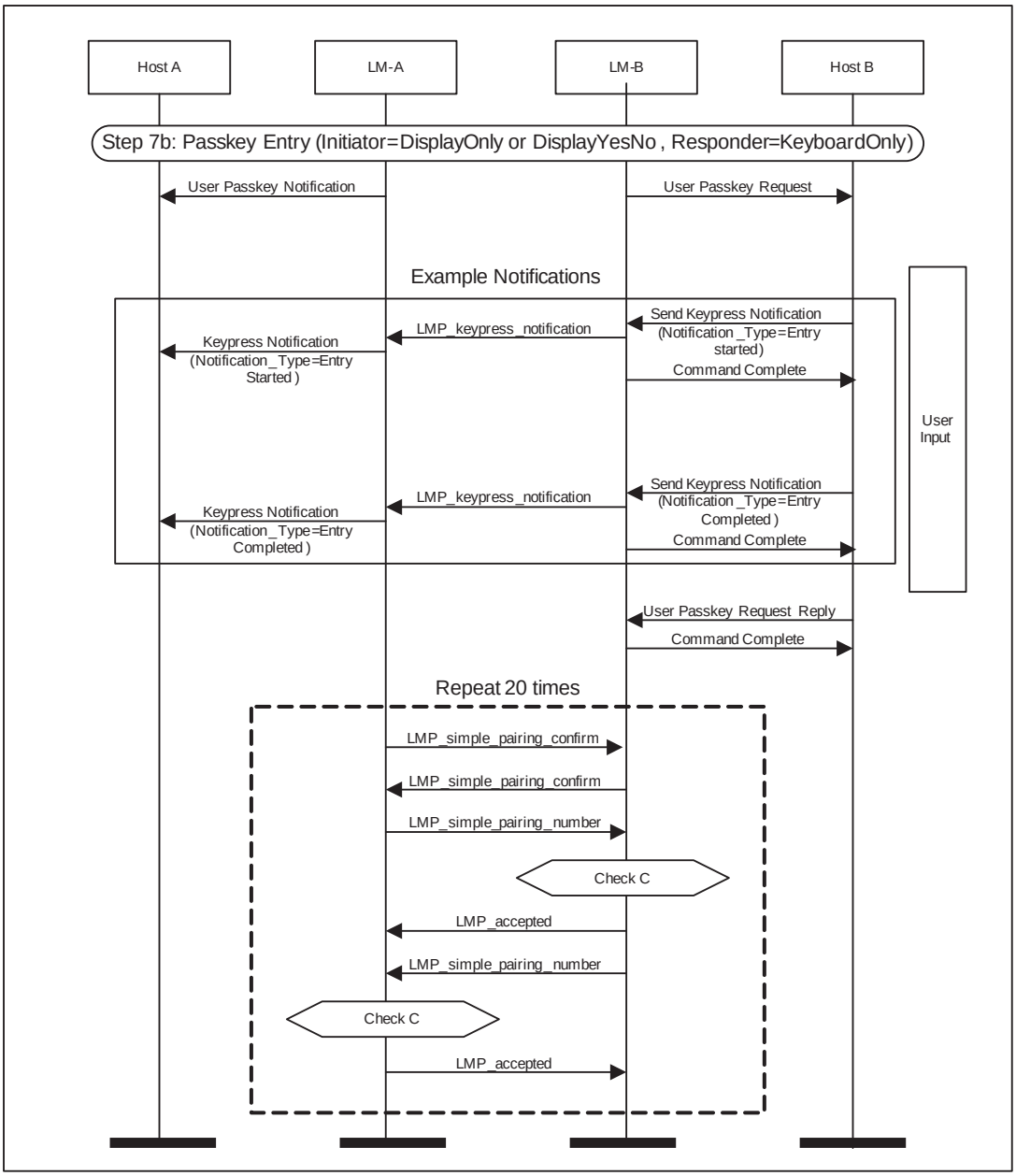

Figure 4.13: Passkey Entry Authentication

4.2.14 Passkey Entry Failure on Responding Side

If the passkey entry fails on the responding side, Simple Pairing is terminated.

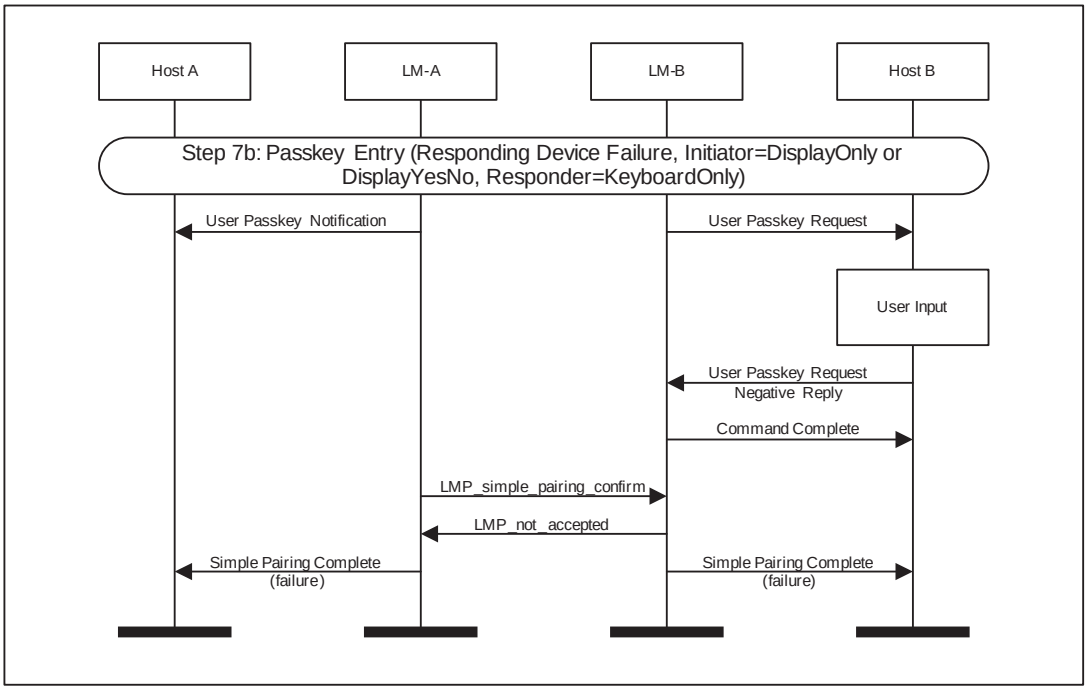

Figure 4.14: Passkey Entry Failure on Responding Side

4.2.15 Passkey Entry Failure on Initiator Side

If the passkey entry fails on the initiating side, Simple Pairing is terminated. Note that this is only possible if the initiating LM side sends an HCI User Passkey Request event.

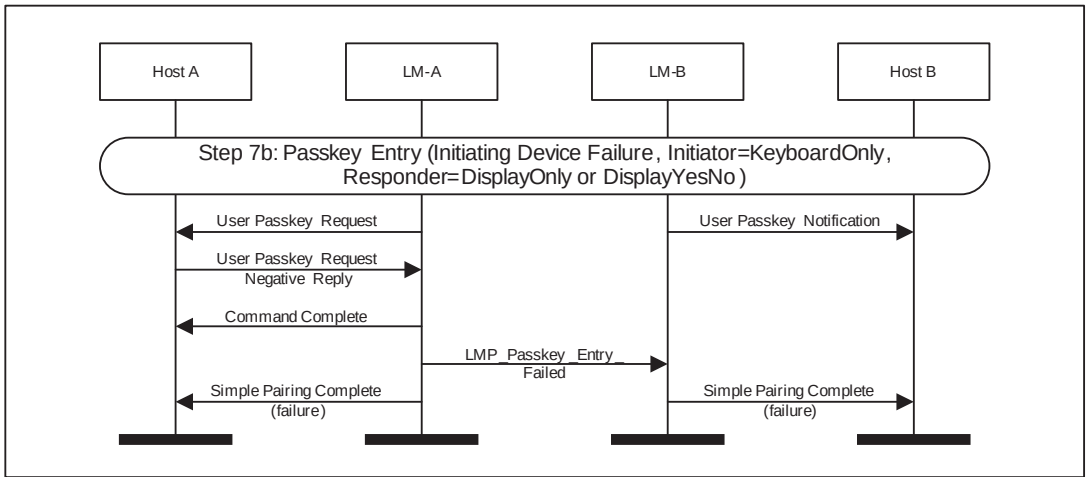

Figure 4.15: Passkey Entry Failure on Initiating Side

4.2.16 Out of Band

The OOB authentication will only be done when both devices have some OOB information to use. This step requires no user interaction.

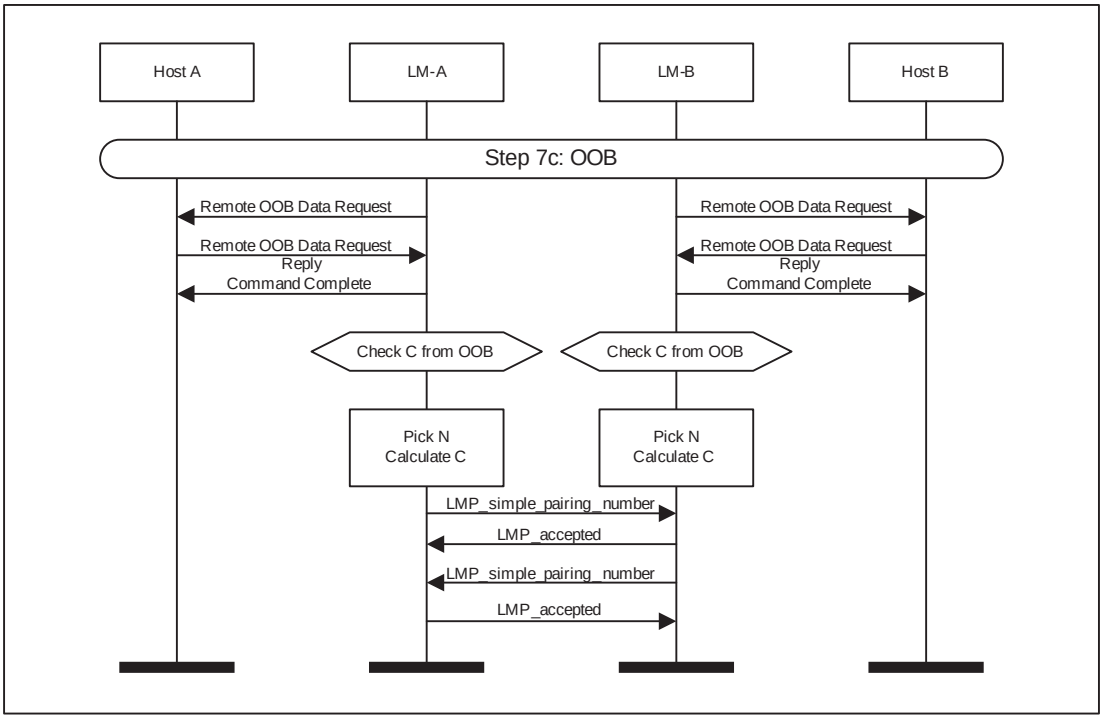

Figure 4.16: OOB Authentication

4.2.17 OOB Failure on Initiator Side

If the initiating side does not have OOB information, Simple Pairing is terminated.

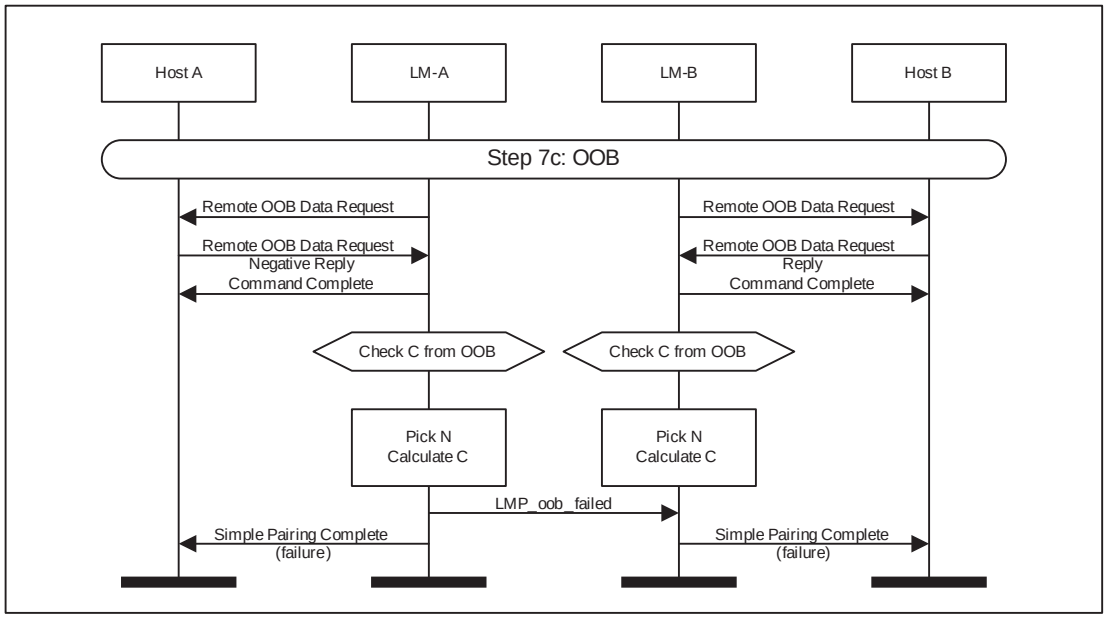

Figure 4.17: OOB Authentication failure on initiating side

4.2.18 DHKey Checks

Once the devices have been authenticated, and the DHKey calculation has completed, the DHKey value generated is checked. If this succeeds, then both devices would have finished displaying information to the user about the process, and therefore a message is sent from the controller to the host to notify it to stop displaying this information.

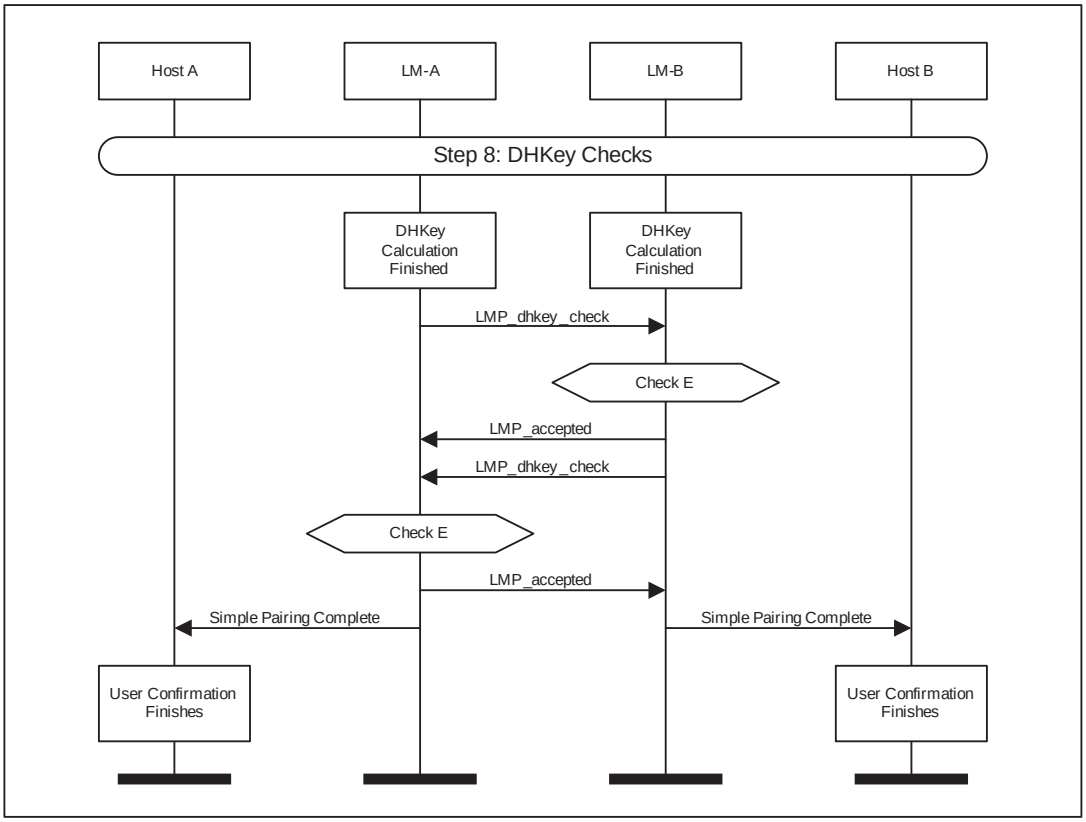

Figure 4.18: DHKey Checks

4.2.19 Calculate Link Key

Once simple pairing is complete, the link key can be calculated from the DHKey, and this should be used as input to a standard mutual authentication. Once this is complete, a Link Key Notification event will be generated.

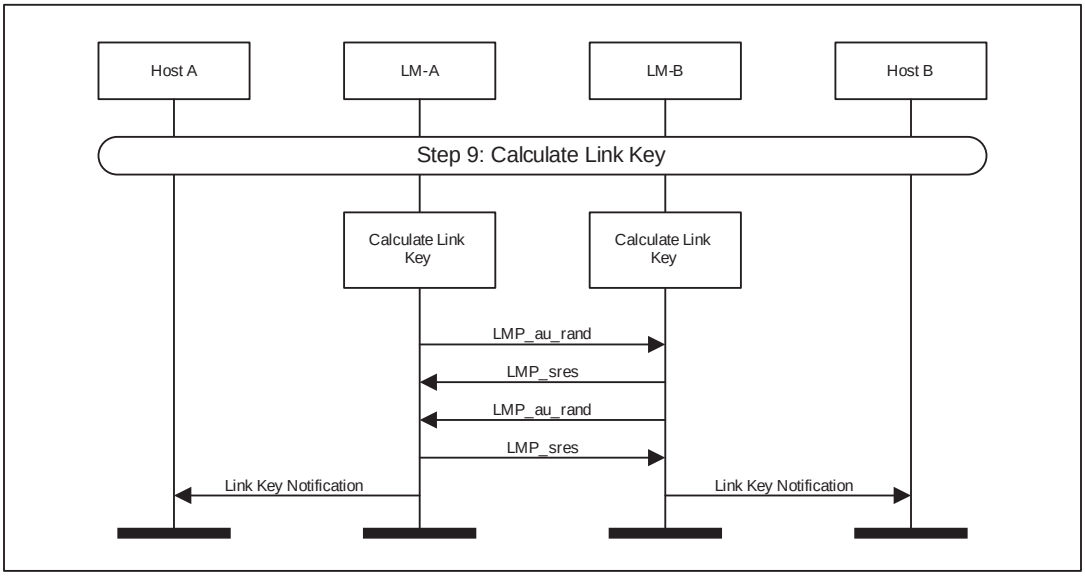

Figure 4.19: Calculate Link Key

4.2.20 Enable Encryption

Once the link key has been notified to the host, the Authentication Requested command will complete with an Authentication Complete event. The host can then turn on encryption using the standard methods.

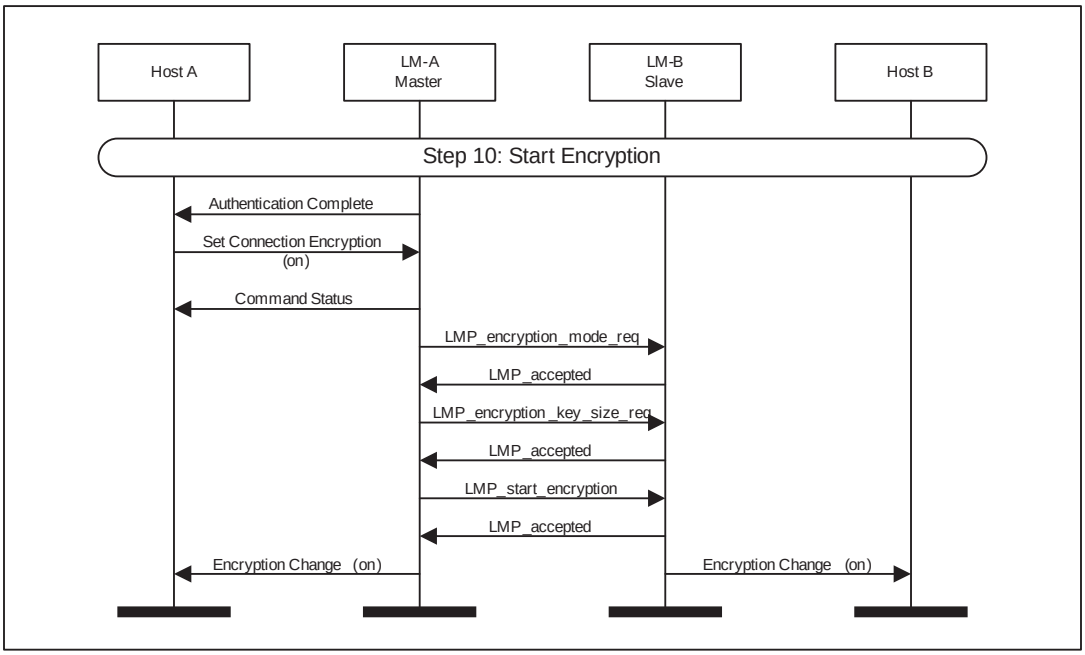

Figure 4.20: Start Encryption

4.2.21 L2CAP Connection Response

If this simple pairing was triggered by an L2CAP Connection Request, then only after all of the above steps have completed can the L2CAP Connection Response message be sent.

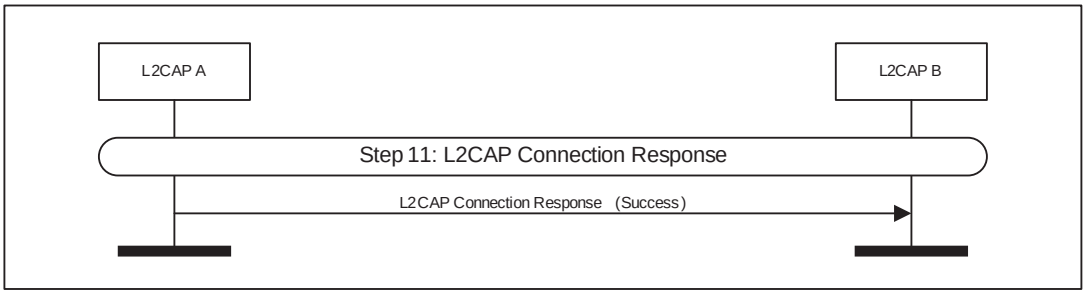

Figure 4.21: L2CAP Connection Response

4.3 LINK SUPERVISION TIMEOUT CHANGED EVENT

When enabled by the Host, the slave generates an HCI_Link_Supervision_Timeout_Changed event after the LMP_supervision_timeout PDU is received.

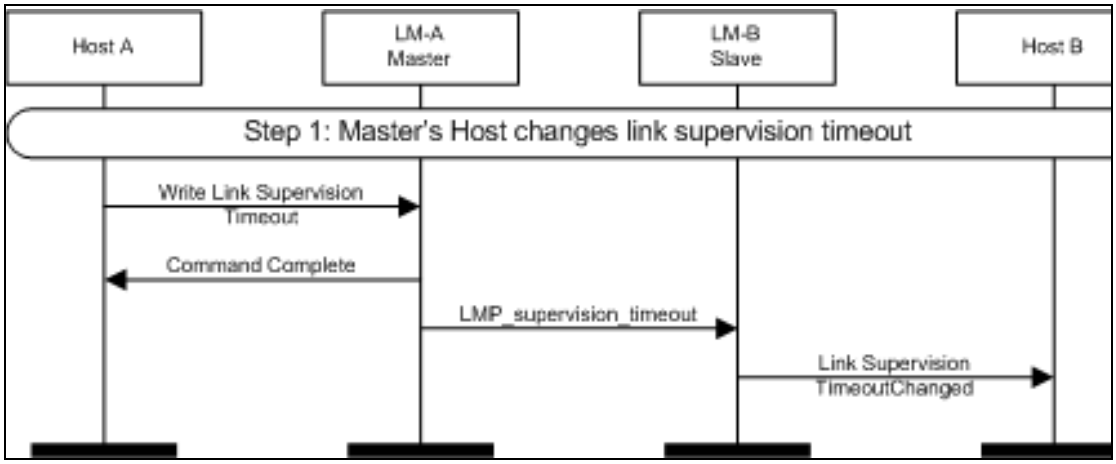

Figure 4.22: Link Supervision Timeout Event

4.4 SET CONNECTION ENCRYPTION

Step 1: The host may at any time turn on encryption using the HCI_Set_Connection_Encryption command. This command can be originated from either the master or slave sides. Only the master side is shown in Figure 4.23 on page 770. If this command is sent from a slave, the only difference is that the LMP_encryption_mode_req PDU will be sent from the slave. The LMP_encryption_key_size_req and LMP_start_encryption_req PDUs will always be requested from the master. (See Figure 4.23 on page 770.)

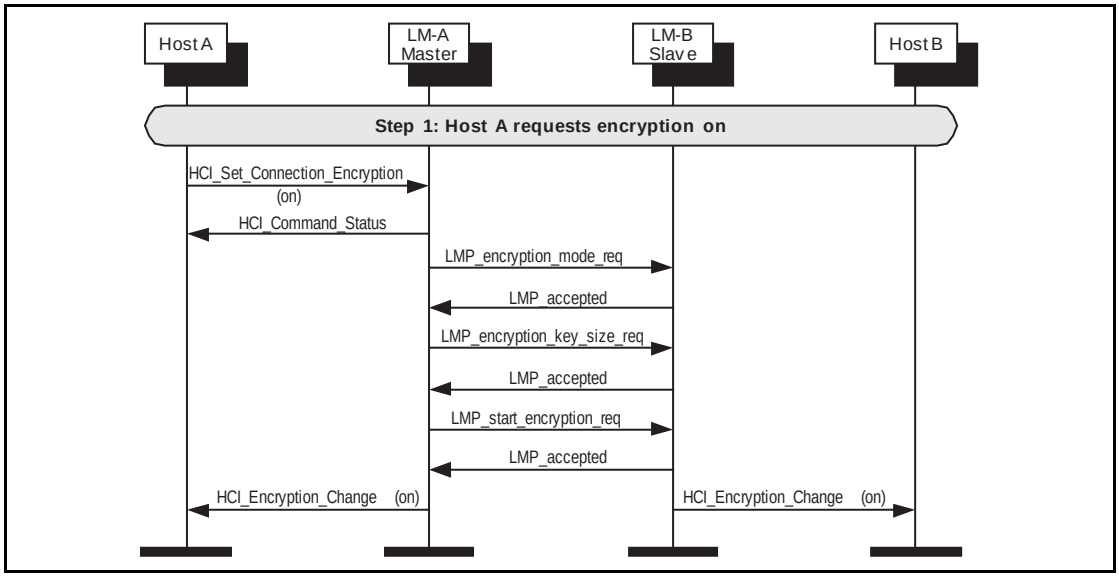

Figure 4.23: Encryption requested.

Step 2: To terminate the use of encryption, The HCI_Set_Connection_Encryption command is used. (See Figure 4.24 on page 770.)

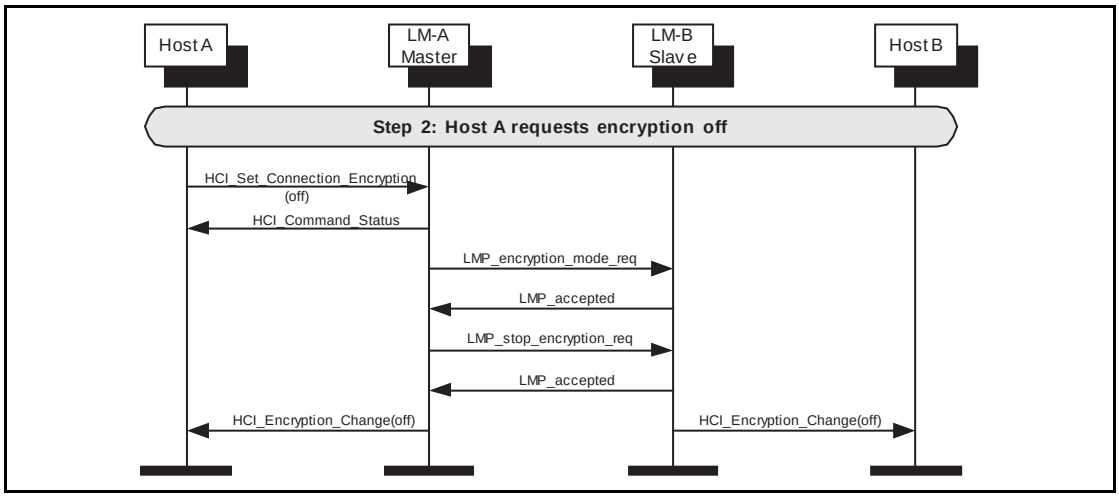

Figure 4.24: Encryption off requested.

4.5 CHANGE CONNECTION LINK KEY

Step 1: The master host (Host A) may change the connection link key using the HCI_Change_Connection_Link_Key command. A new link key will be generated and the hosts will be notified of this new link key. (See Figure 4.25 on page 771.)

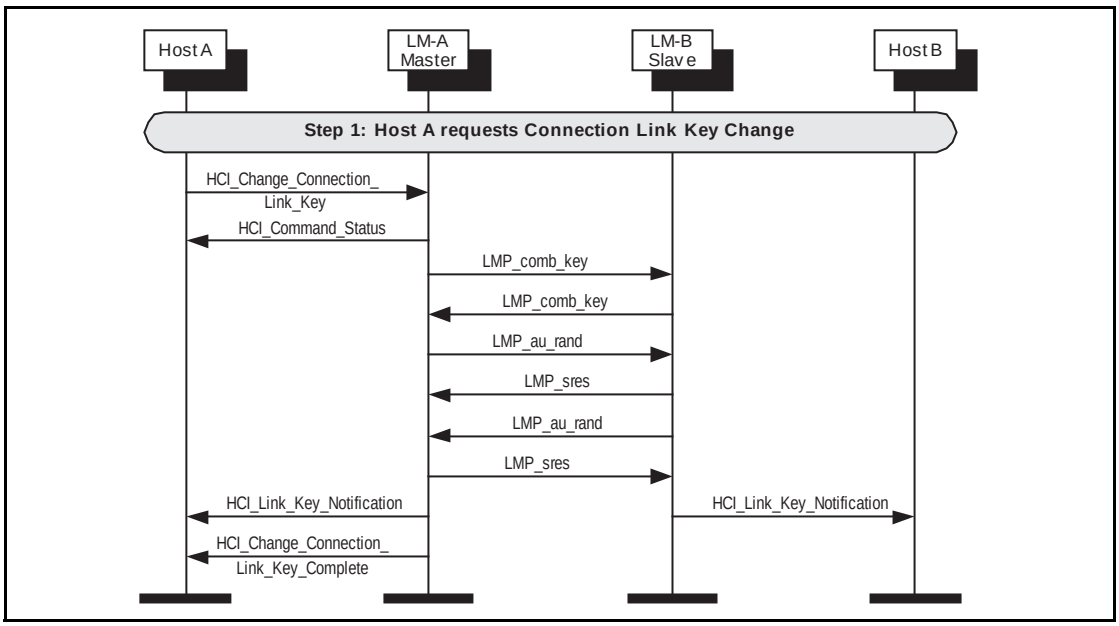

Figure 4.25: Change connection link key.

4.6 CHANGE CONNECTION LINK KEY WITH ENCRYPTION PAUSE AND RESUME

Step 1: The master host (Host A) may change the connection link key using the HCI_Change_Connection_Link_Key command. A new link key will be generated and the hosts will be notified of this new link key. Encryption will then be paused and resumed, immediately using this new link key to generate a new encryption key. (See Figure 4.26 on page 772.)

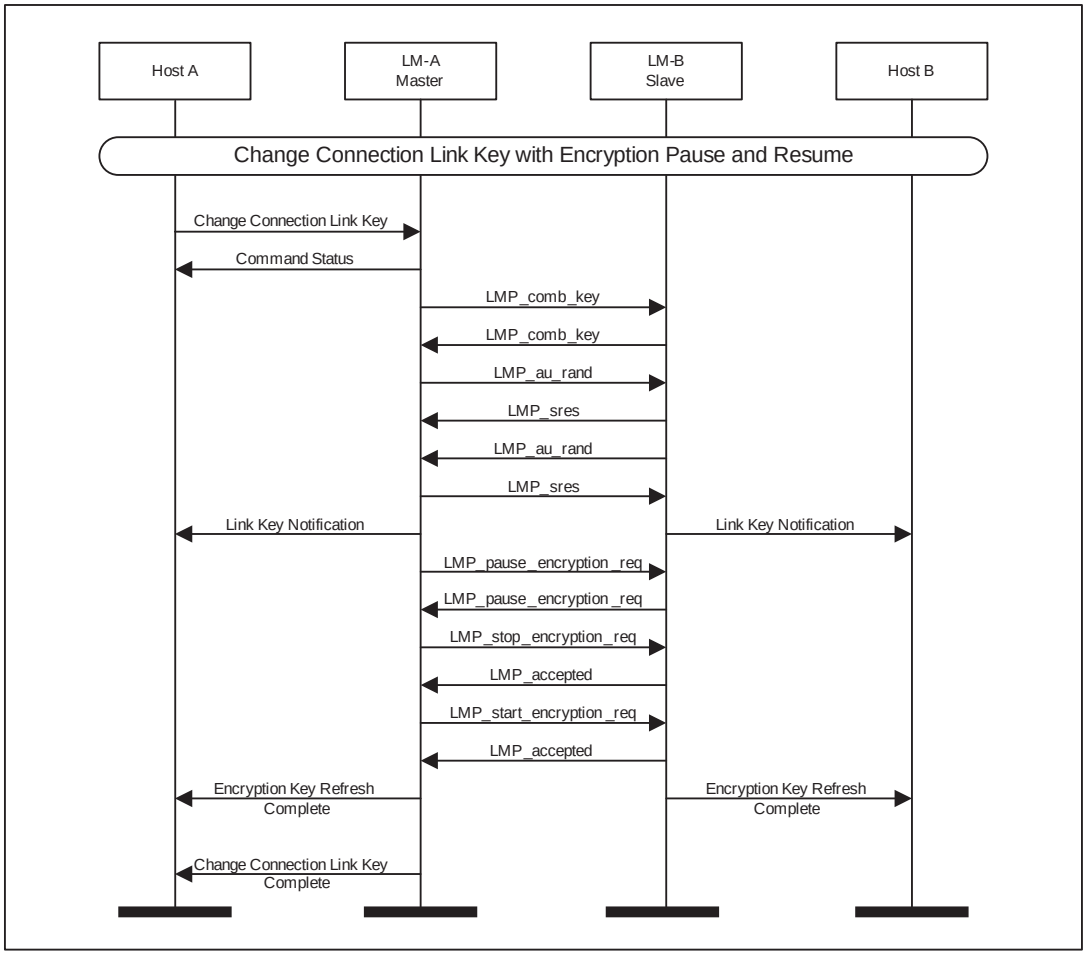

Figure 4.26: Change Connection Link Key with Encryption Pause Resume

4.7 MASTER LINK KEY

Step 1: The host changes to a Master Link Key from a Semi-permanent Link Key using the HCI_Master_Link_Key command. (See Figure 4.27 on page 773.)

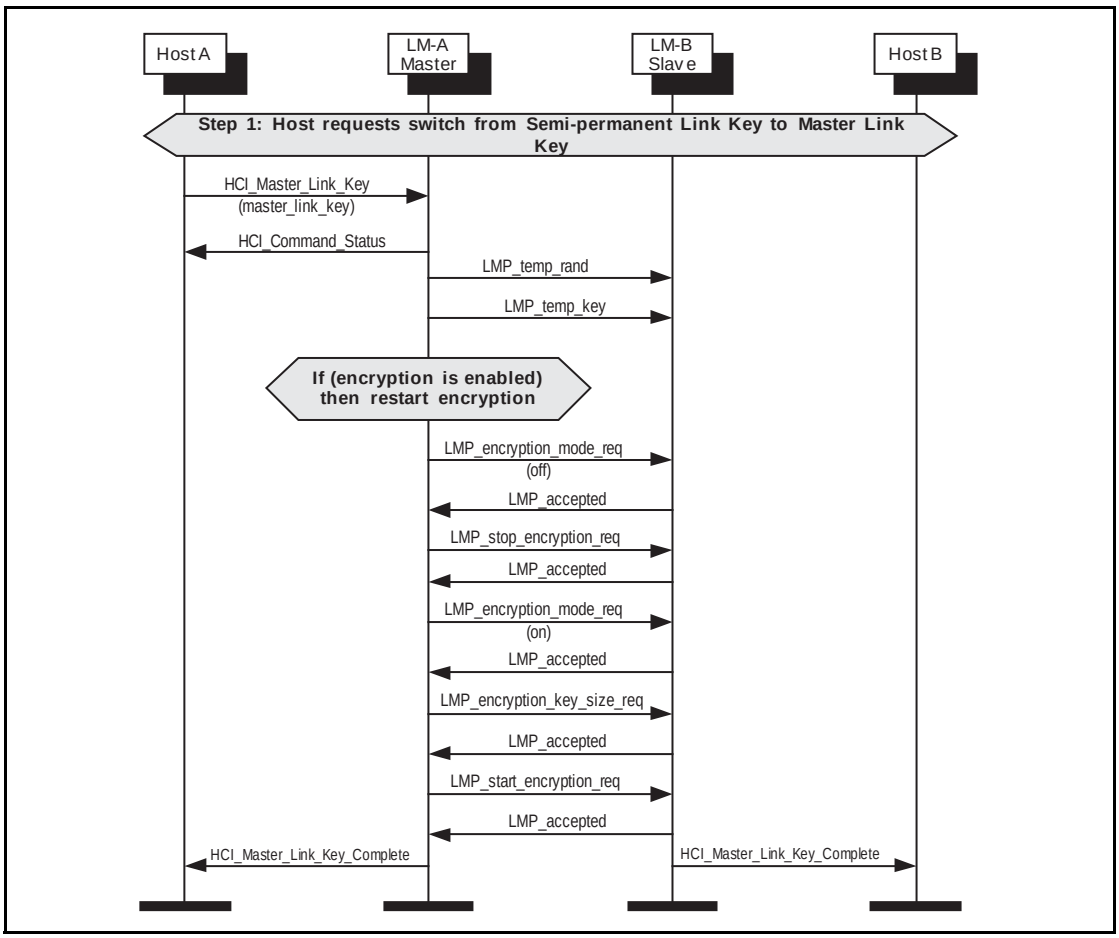

Figure 4.27: Change to master link key.

Step 2: The host changes to a Semi-permanent Link Key from a Master Link Key using the HCI_Master_Link_Key command. (See Figure 4.28 on page 774.)

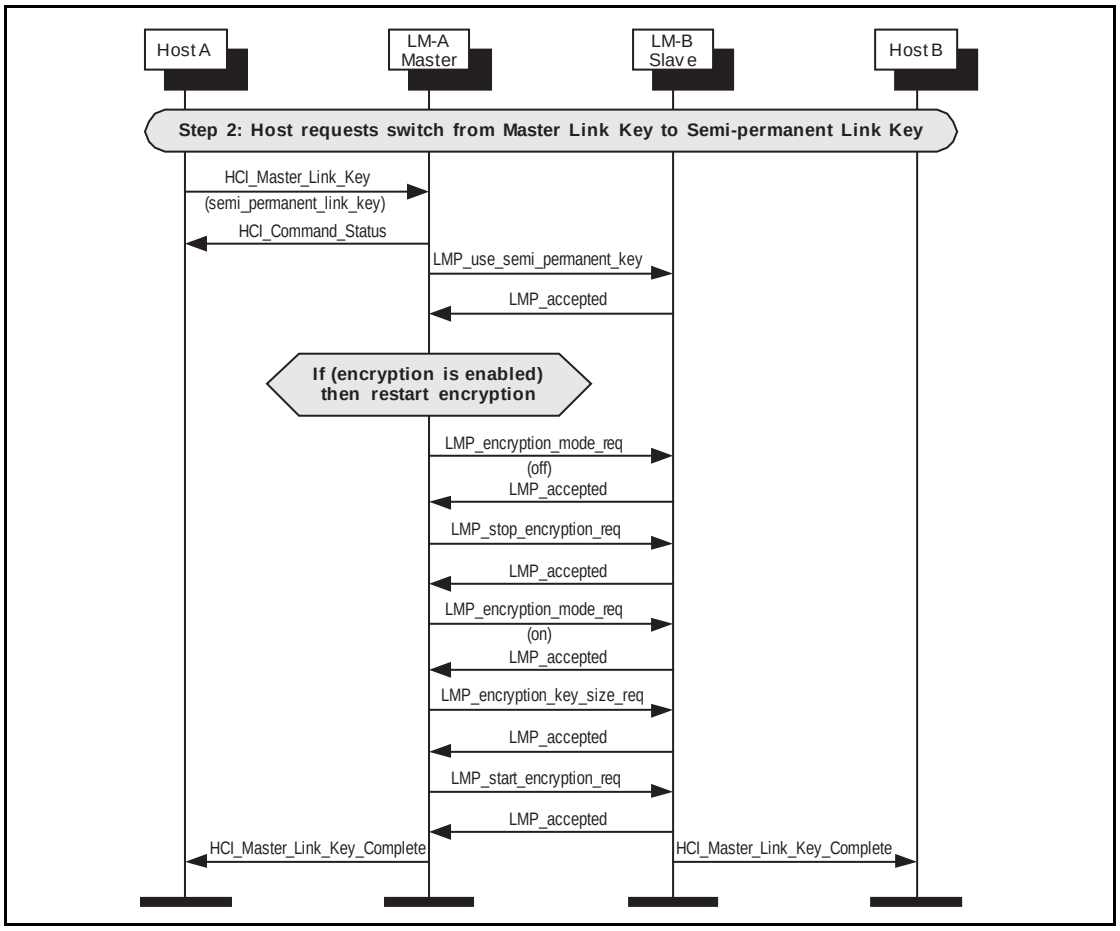

Figure 4.28: Change to semi permanent link key.

4.8 READ REMOTE SUPPORTED FEATURES

Using the HCI_Read_Remote_Supported_Features command the supported LMP Features of a remote device can be read. (See Figure 4.29 on page 775.)

If the remote supported features have been obtained previously then the Controller may return them without sending any LMP PDUs.

Step 1: The host requests the supported features of a remote device.

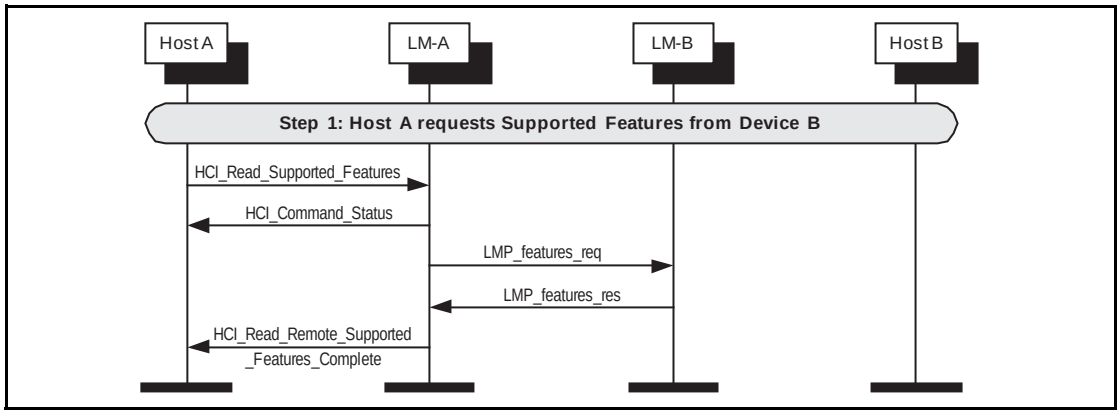

Figure 4.29: Read remote supported features.

4.9 READ REMOTE EXTENDED FEATURES

Using the HCI_Read_Remote_Extended_Features command the extended LMP features of a remote device can be read. (See Figure 4.30 on page 775.)

If the remote extended features have been obtained previously then the Controller may return them without sending any LMP PDUs.

Step 1: The host requests the extended features of a remote device.

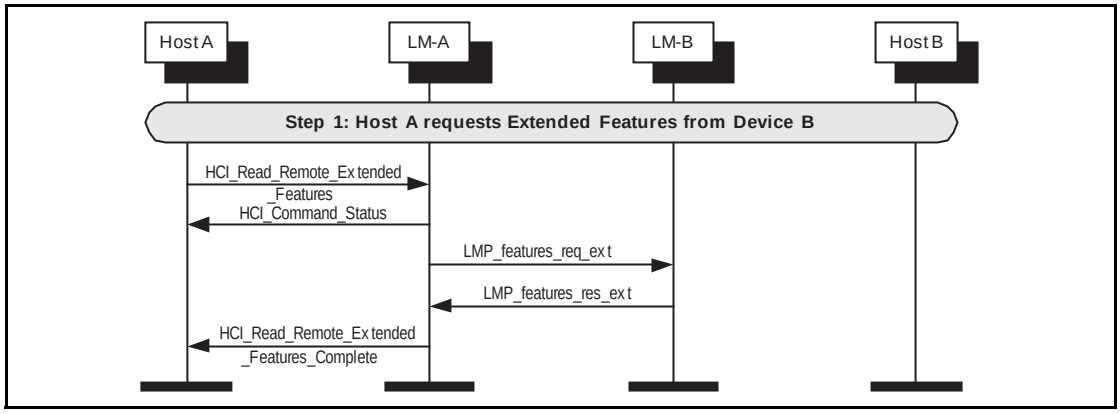

Figure 4.30: Read remote extended features.

4.10 READ CLOCK OFFSET

Using the HCI_Read_Clock_Offset command the device acting as the master can read the Clock Offset of a slave. The Clock Offset can be used to speed up the paging procedure in a later connection attempt. If the command is requested from the slave device, the Controller will directly return a Command Status event and a Read Clock Offset Complete event without sending any LMP PDUs. (See Figure 4.31 on page 776.)

Step 1: The host requests the clock offset of a remote device.

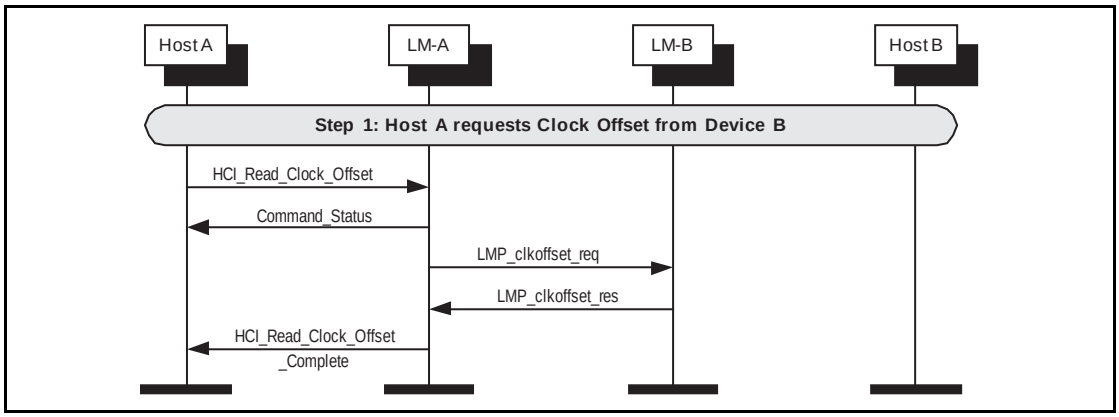

Figure 4.31: Read clock offset.

4.11 ROLE SWITCH ON AN ENCRYPTED LINK USING ENCRYPTION PAUSE AND RESUME

The HCI_Switch_Role command can be used to explicitly switch the current master / slave role of the local device with the specified device. The master host (A) requests a role switch with a slave. This will first pause encryption, and then send the switch request, and the slave will respond with the slot offset and accepted. The role switch is performed by doing the TDD switch and piconet switch. Encryption is resumed, and finally an HCI_Role_Change event is sent on both sides. (Section 4.12 on page 777)

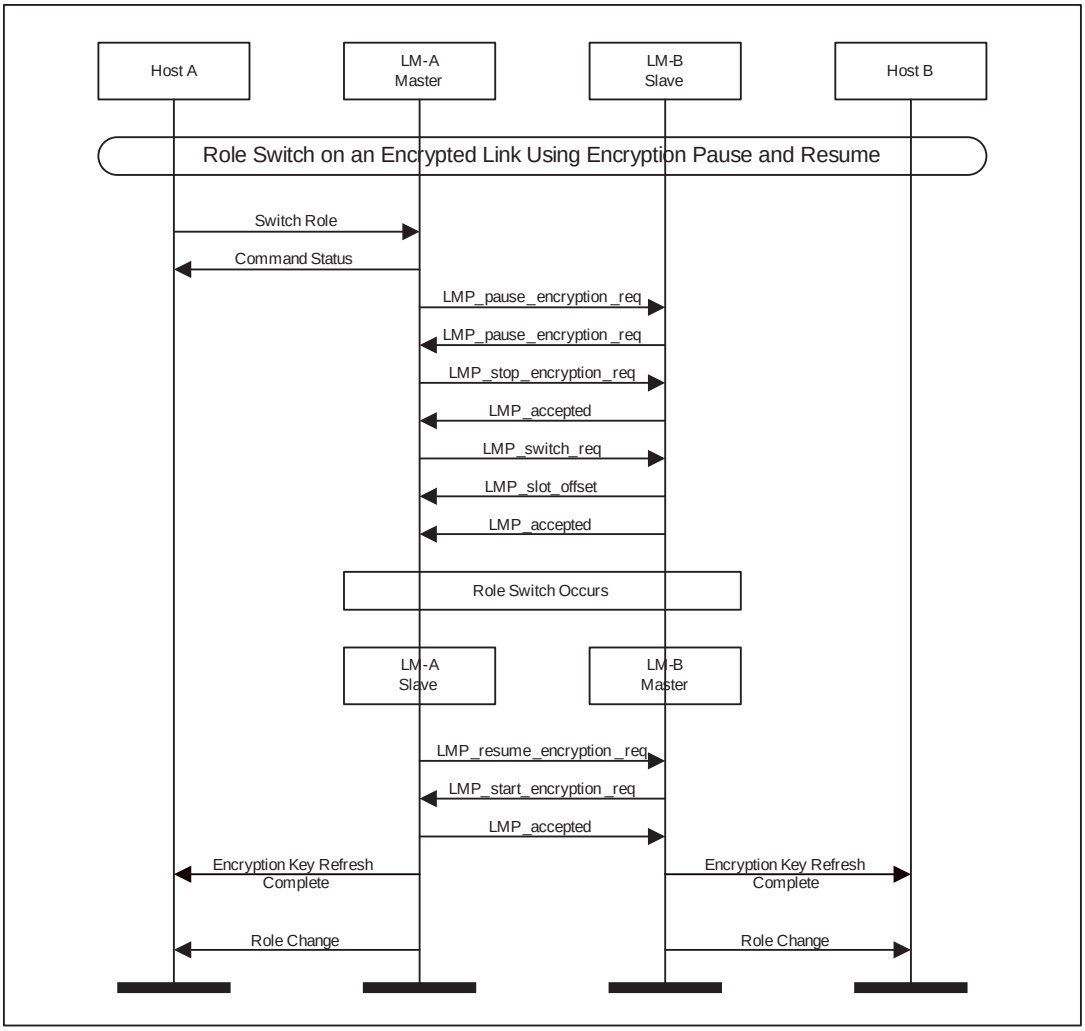

Figure 4.32: Role Switch on an Encrypted link using encryption pause and resume.

4.12 REFRESHING ENCRYPTION KEYS

The HCI_Refresh_Encryption_Key command may be used by the master's Host to explicitly pause and resuming encryption to refresh the encryption key. After encryption is resumed an HCI_Encryption_Key_Freshness event is sent on both sides. (Section 4.13 on page 764).

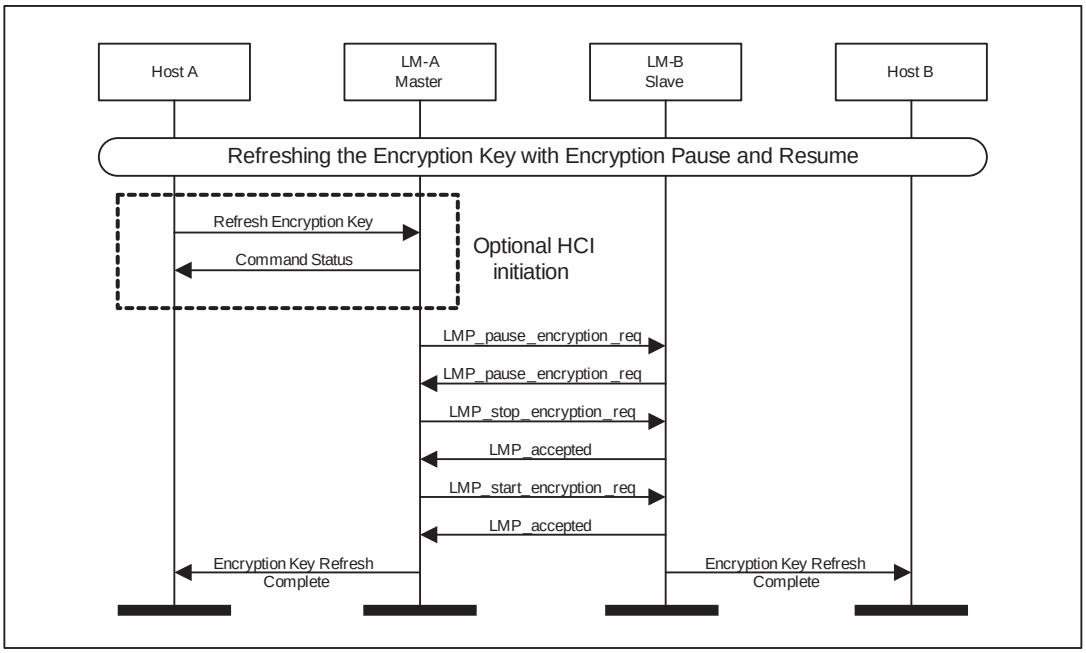

Figure 4.33: Refreshing encryption keys using encryption pause and resume

4.13 READ REMOTE VERSION INFORMATION

Using the HCI_Read_Remote_Version_Information command the version information of a remote device can be read. (See Figure 4.34 on page 778.)

If the remote version information has been obtained previously then the Controller may return them without sending any LMP PDUs.

Step 1: The host requests the version information of a remote device.

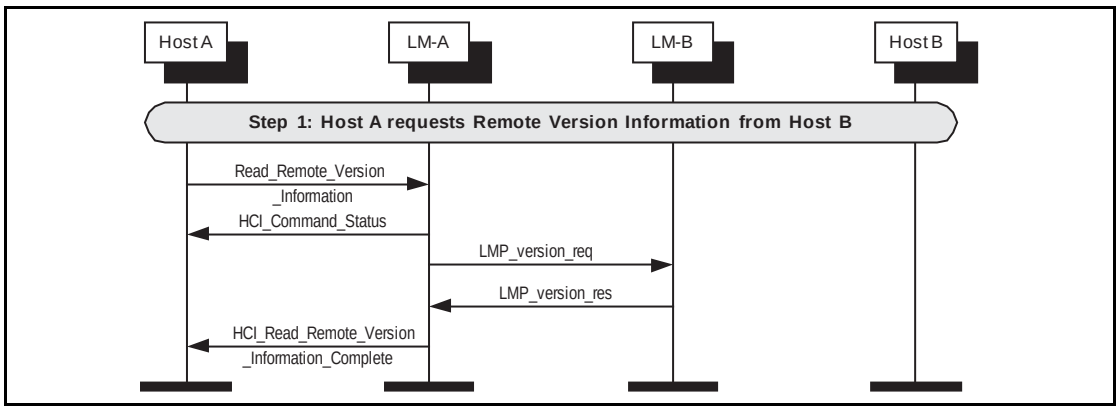

Figure 4.34: Read remote version information.

4.14 QOS SETUP

Using the HCI_Flow_Specification command the Quality of Service (QoS) and Flow Specification requirements of a connection can be notified to a Controller.

The Controller may then change the quality of service parameters with a remote device. (See Figure 4.35 on page 779.)

Step 1: The host sends QoS parameters to a remote device.

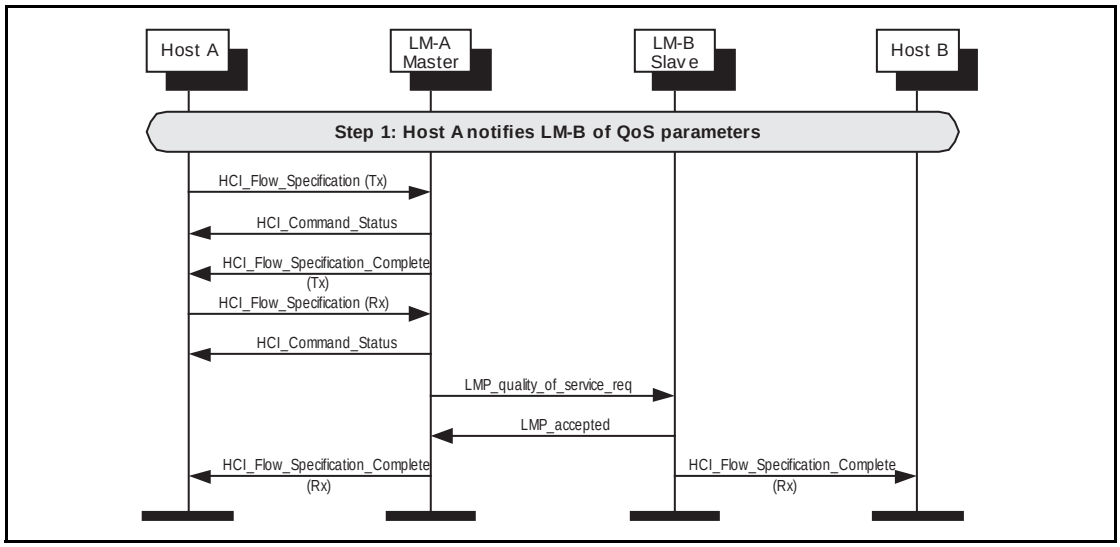

Figure 4.35: QoS flow specification.

4.15 SWITCH ROLE

The HCI_Switch_Role command can be used to explicitly switch the current master / slave role of the local device with the specified device.

Step 1a: The master host (A) requests a role switch with a slave. This will send the switch request, and the slave will respond with the slot offset and accepted. (See Figure 4.36 on page 779.)

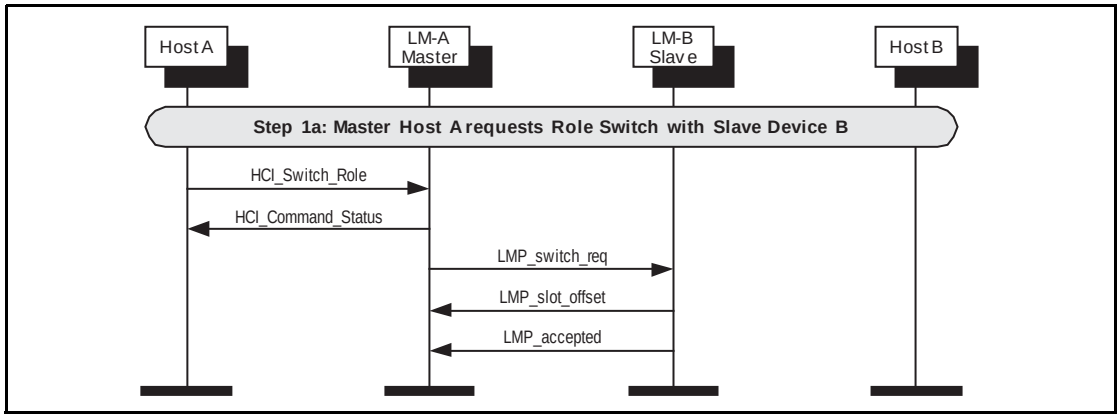

Figure 4.36: Master requests role switch.

Step 1b: The slave host (B) requests a role switch with a master. This will send the slot offset and the switch request, and the master will respond with a LMP_accepted PDU. (See Figure 4.37 on page 780.)

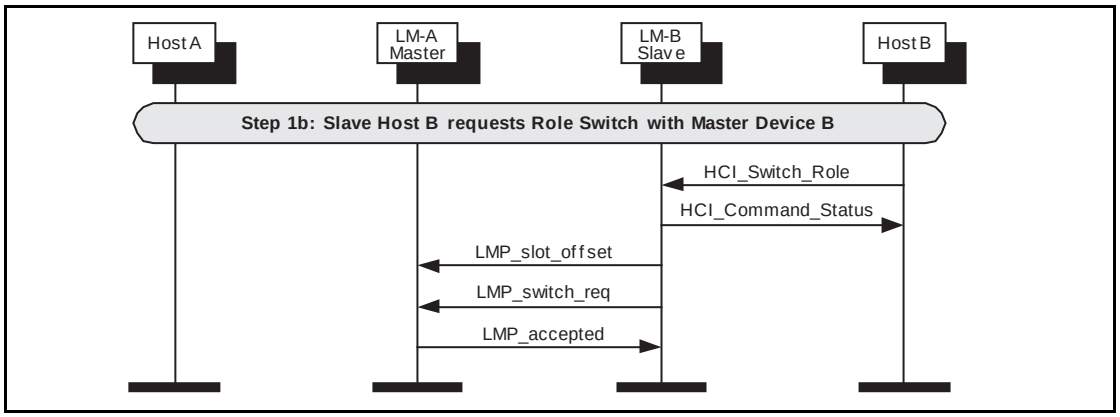

Figure 4.37: Slave requests role switch.

Step 2: The role switch is performed by doing the TDD switch and piconet switch. Finally an HCI_Role_Change event is sent on both sides. (See Figure 4.38 on page 780.)

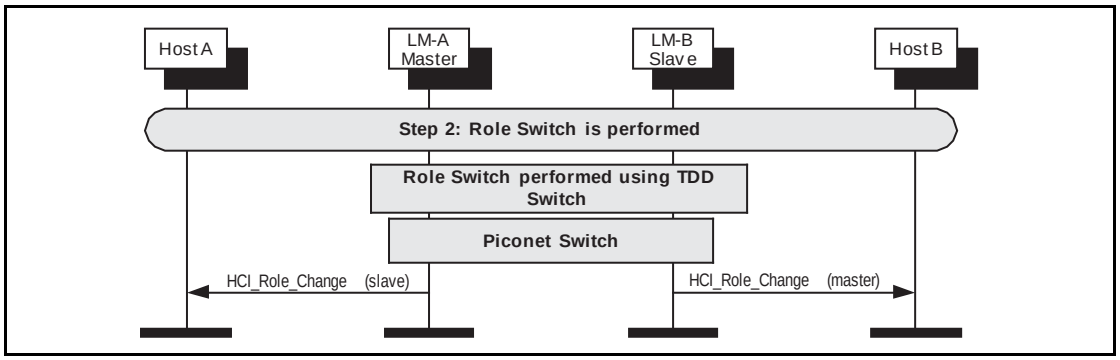

Figure 4.38: Role switch is performed.

4.16 AMP PHYSICAL LINK CREATION AND DISCONNECT

A flow diagram of the AMP link establishment and detachment of a connection between two devices is shown in Figure 4.39.

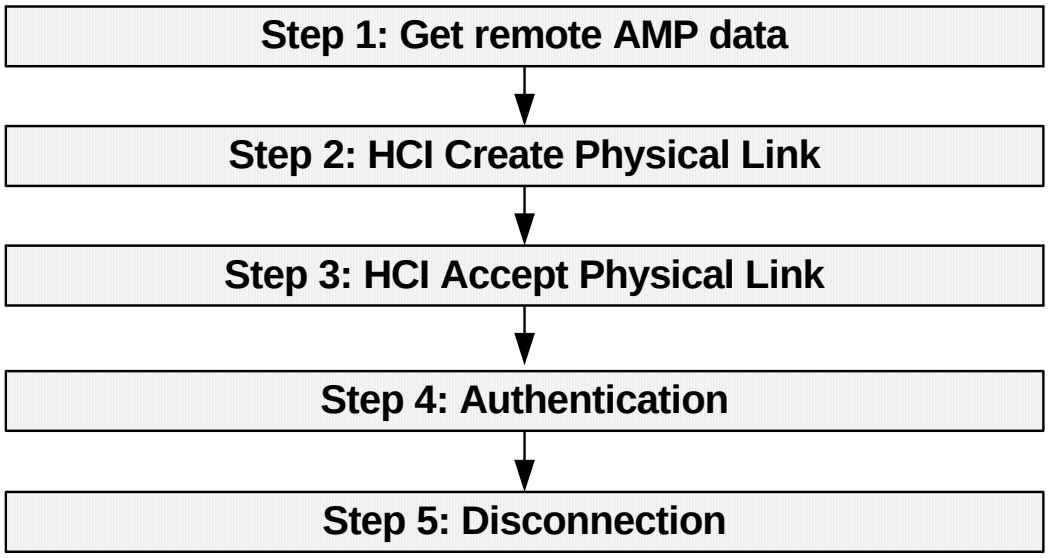

Figure 4.39: Overview diagram for Physical Link creation and disconnection

4.16.1 Physical Link Establishment

The process of establishing a Physical Link consists of 4 steps.

Step 1: Host A uses the BR/EDR Controller to request AMP_Info data from Host B in order to create an AMP connection. Host B gets this information from PAL B using HCI Read Local AMP Info. Host B returns the information to Host A over the BR/EDR radio.

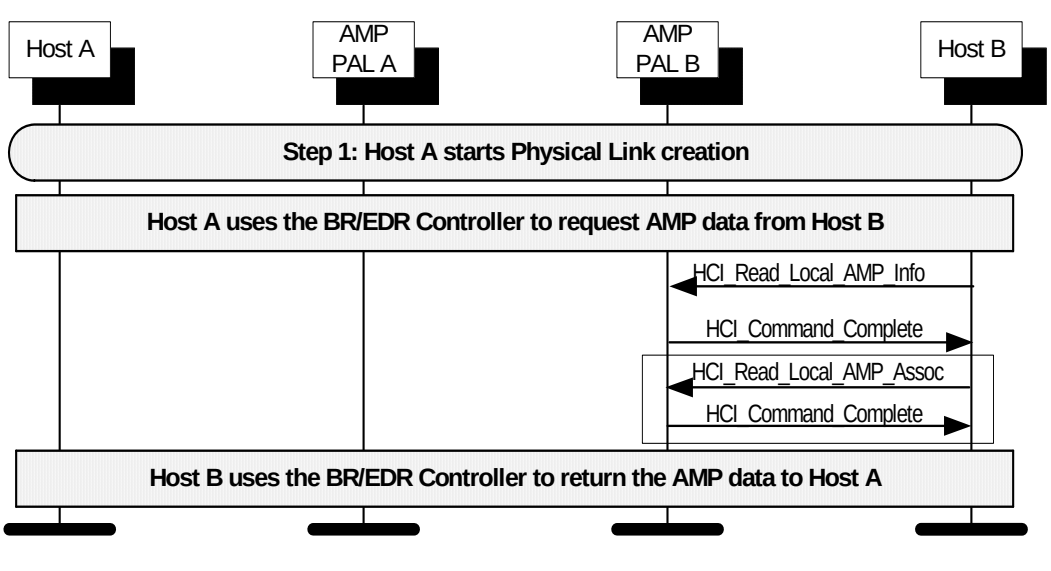

Figure 4.40: Get remote AMP data

Step 2: Host A sends an HCI Create Physical Link command to its AMP Controller. AMP Controller A determines which channel will be used, and provides channel information to its Host. AMP Controller A joins or creates that channel.

Note use of dotted rectangles for zero or multiple uses of read or write AMP_Assoc.

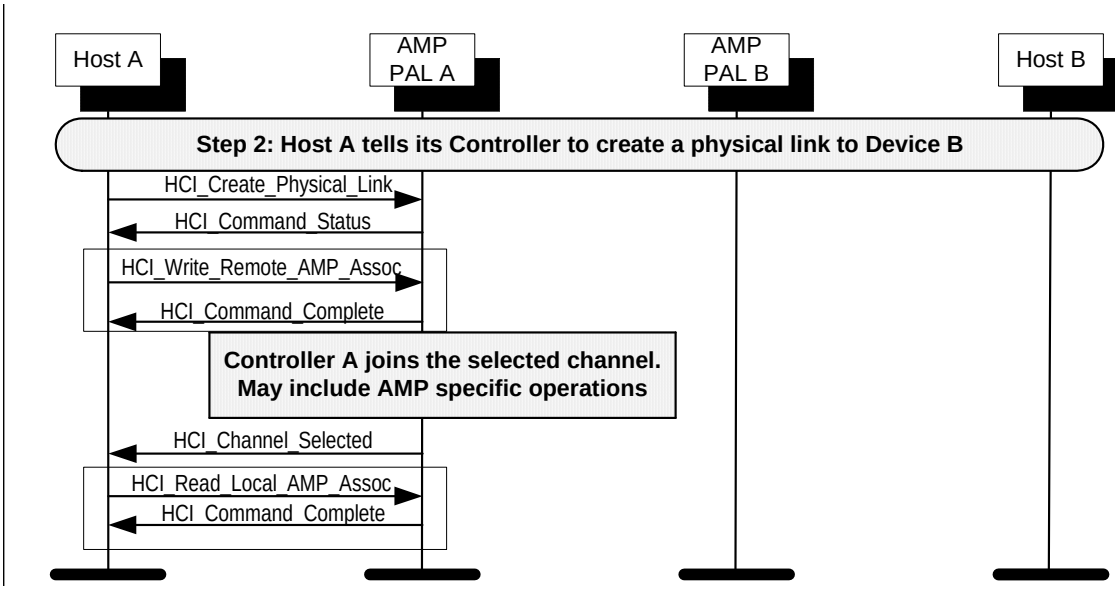

Figure 4.41: Host A tells its Controller to create the physical link

Step 3: Host A uses the BR/EDR radio to request a physical link to B. Host B tells its AMP Controller to accept a physical link from Device A.

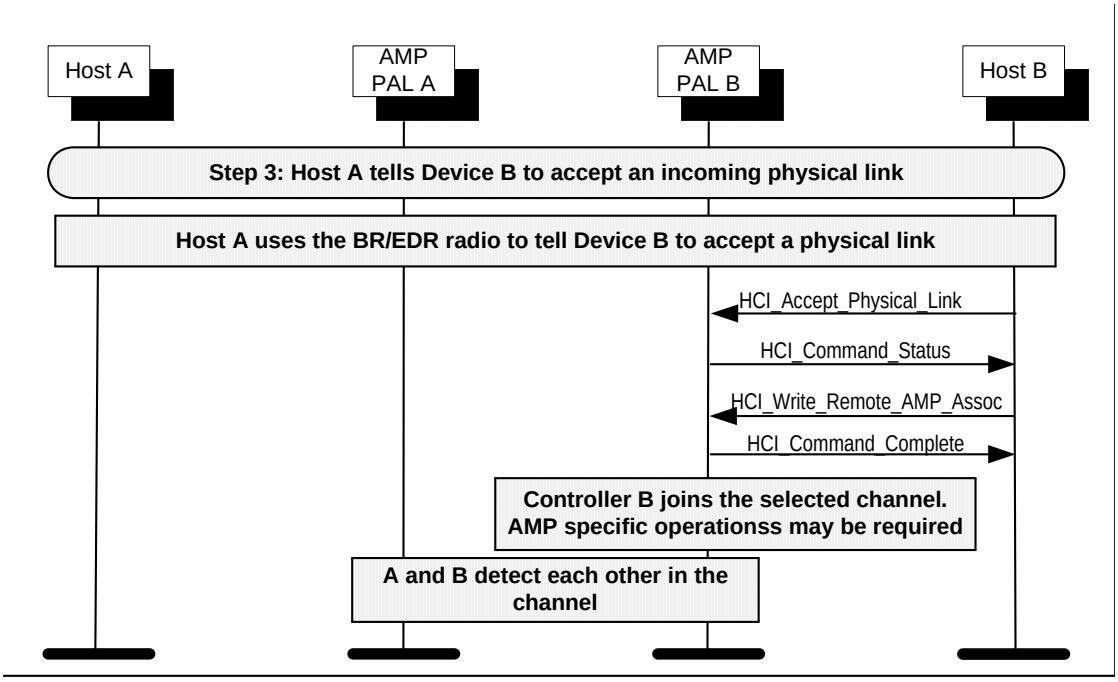

Figure 4.42: Host A tells Host B to accept an incoming physical link

Step 4: The AMP Controllers perform security operations. When the hand-shake is complete, both devices inform their Hosts that the link is ready for use.

Note that the mechanism used to transport the authentication messages is defined by each PAL.

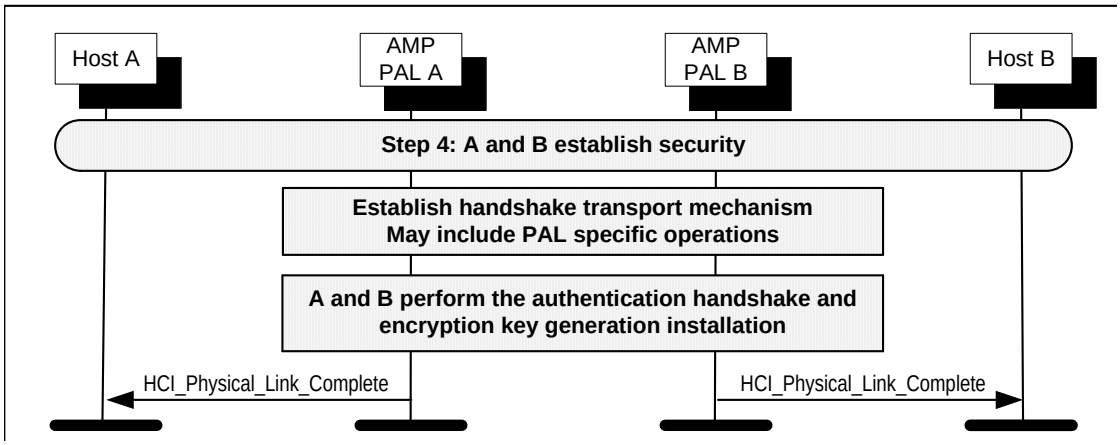

Figure 4.43: A and B establish AMP physical link security

Step 5: Host A sends a Physical Link Disconnect command to its AMP Controller. AMP Controllers A and B do whatever AMP specific action is required to meet the request. Each AMP Controller sends the Physical Link Disconnect Complete event to its host. Both devices can now leave the AMP channel. Note that disconnection of any active Logical Links is not shown in Figure 4.44.

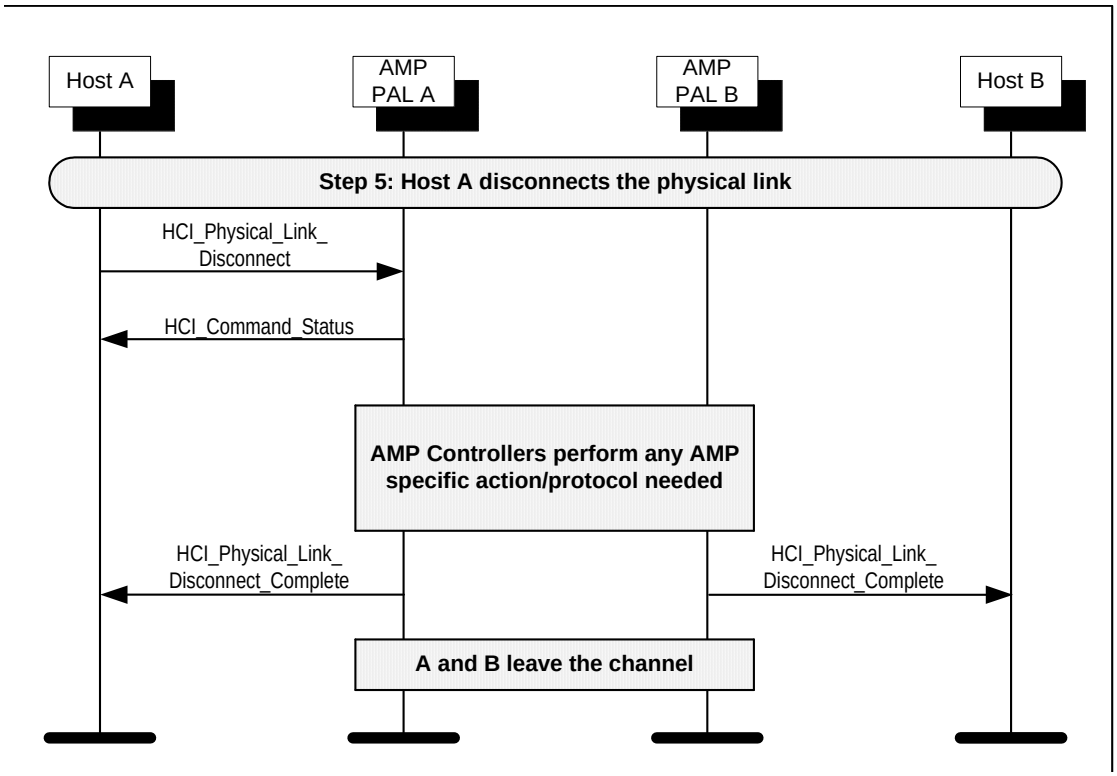

Figure 4.44: Host A disconnects the physical link

Step 6: During normal operation the AMP Controller may alert its Host to issues on the link.

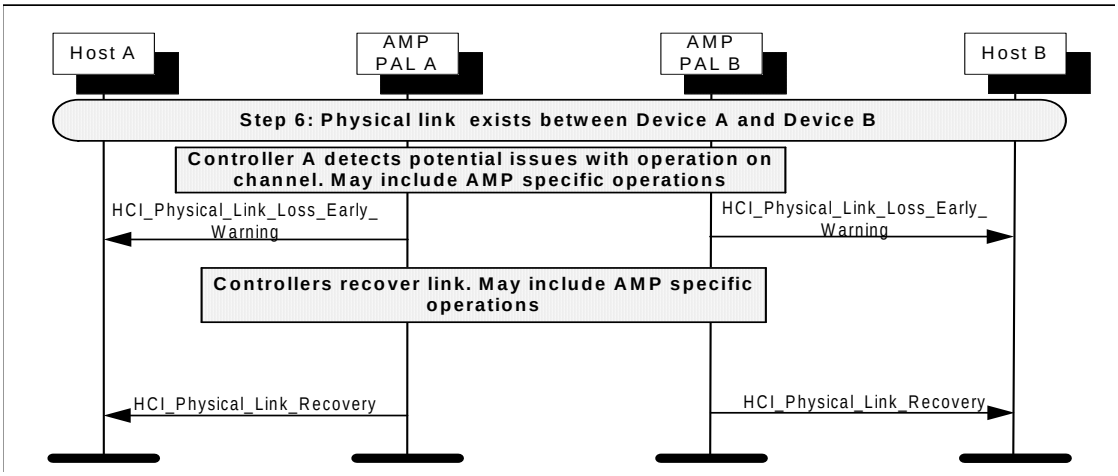

Figure 4.45: Controller reports to its Host of Link Loss

4.16.2 Logical Link Creation

Step 1: Host A sends a Logical Link Create command to its AMP Controller. AMP Controllers A and B do whatever AMP specific action is required to meet the bandwidth request. Each AMP Controller sends the Logical Link Creation Complete event to its host. Both devices can now pass data traffic over the AMP channel.

A flow diagram of the establishment of a Guaranteed logical connection between two devices is shown in Figure 4.46.

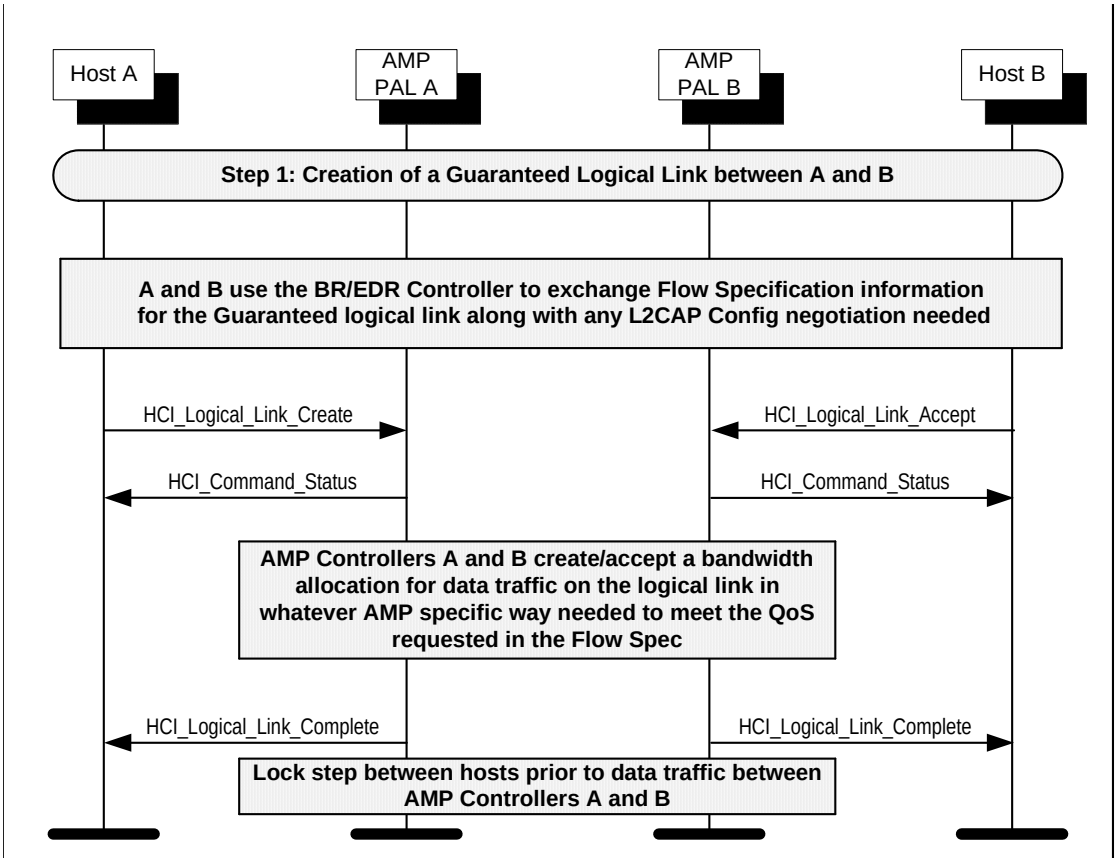

Figure 4.46: Guaranteed Logical Link Creation

Step 2: Host A sends a Logical Link Disconnect command to its AMP Controller. AMP Controllers A and B do whatever AMP specific action is required to meet the request. Each AMP Controller sends the Logical Link Disconnect Complete event to its host.

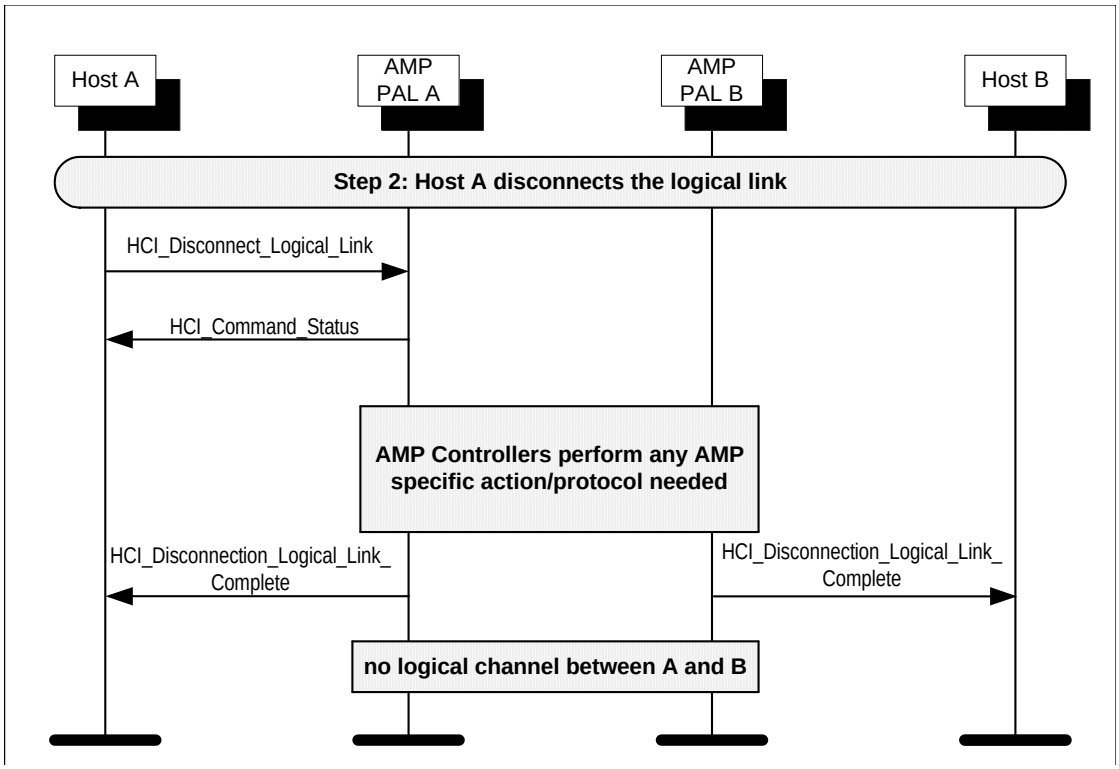

Figure 4.47: Host A disconnects the logical link

Step 3: During normal operation the Host may modify logical link characteristics.

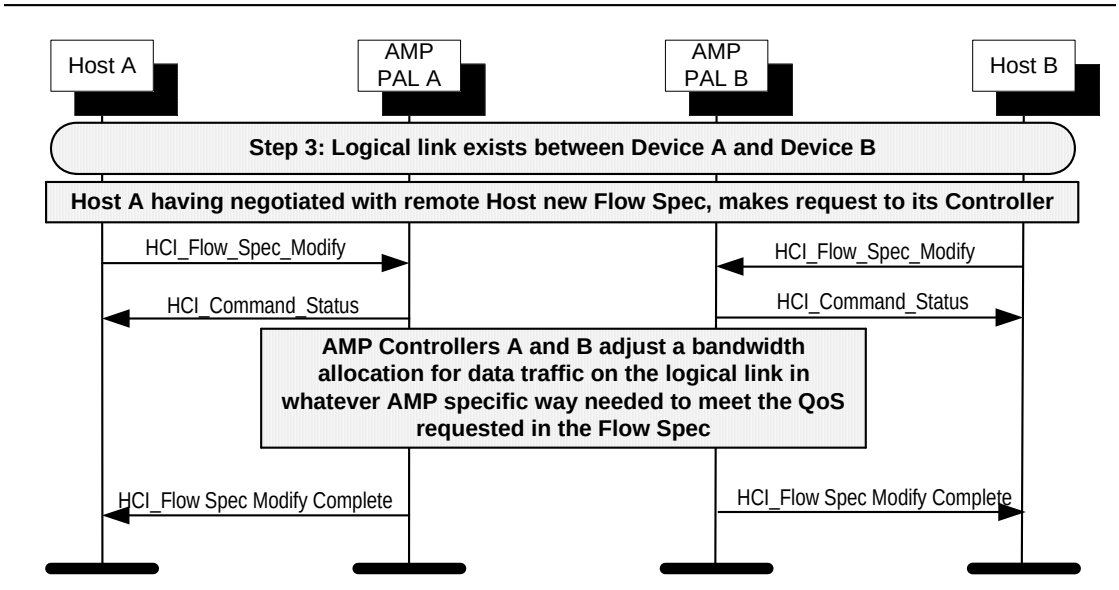

Figure 4.48: Host A modifies Flow_Spec on an existing logical link

4.17 AMP TEST MODE SEQUENCE CHARTS

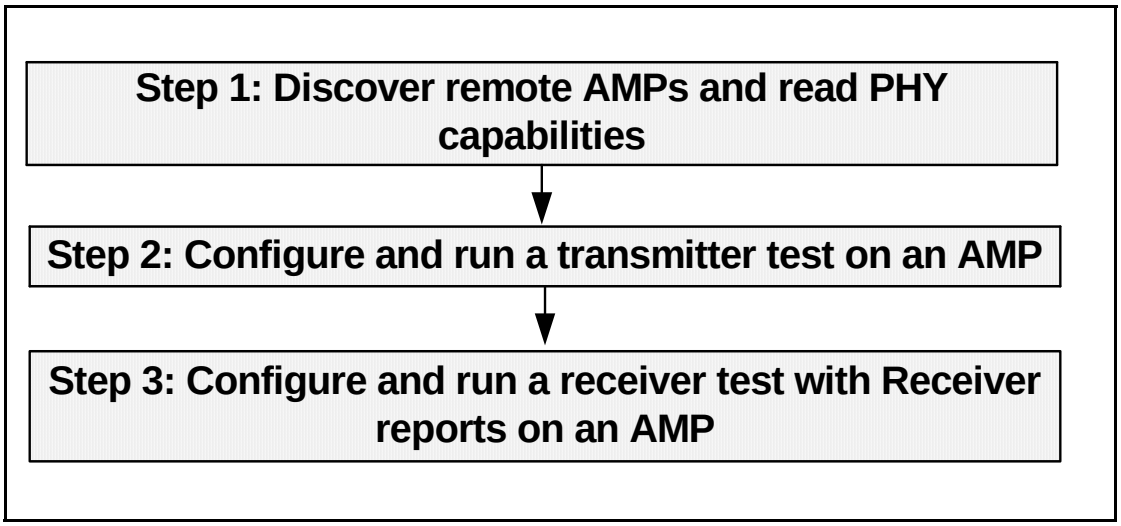

Figure 4.49: Overview diagram for AMP test mode

4.17.1 Discover the AMP Present and Running Transmitter and Receiver Tests

The process of discovering the number of AMPs and running transmitter and receiver tests is detailed in the following three steps.

Step 1: The tester sends an AMP Discovery Request to the AMP Test Manager of the DUT over the BR/EDR ACL connection. The AMP Test Manager will reply with the AMP Discover Response to the tester with a list of available AMP and type over the BR/EDR ACL connection. The tester then requests the PHY capabilities for each of the AMP it may test.

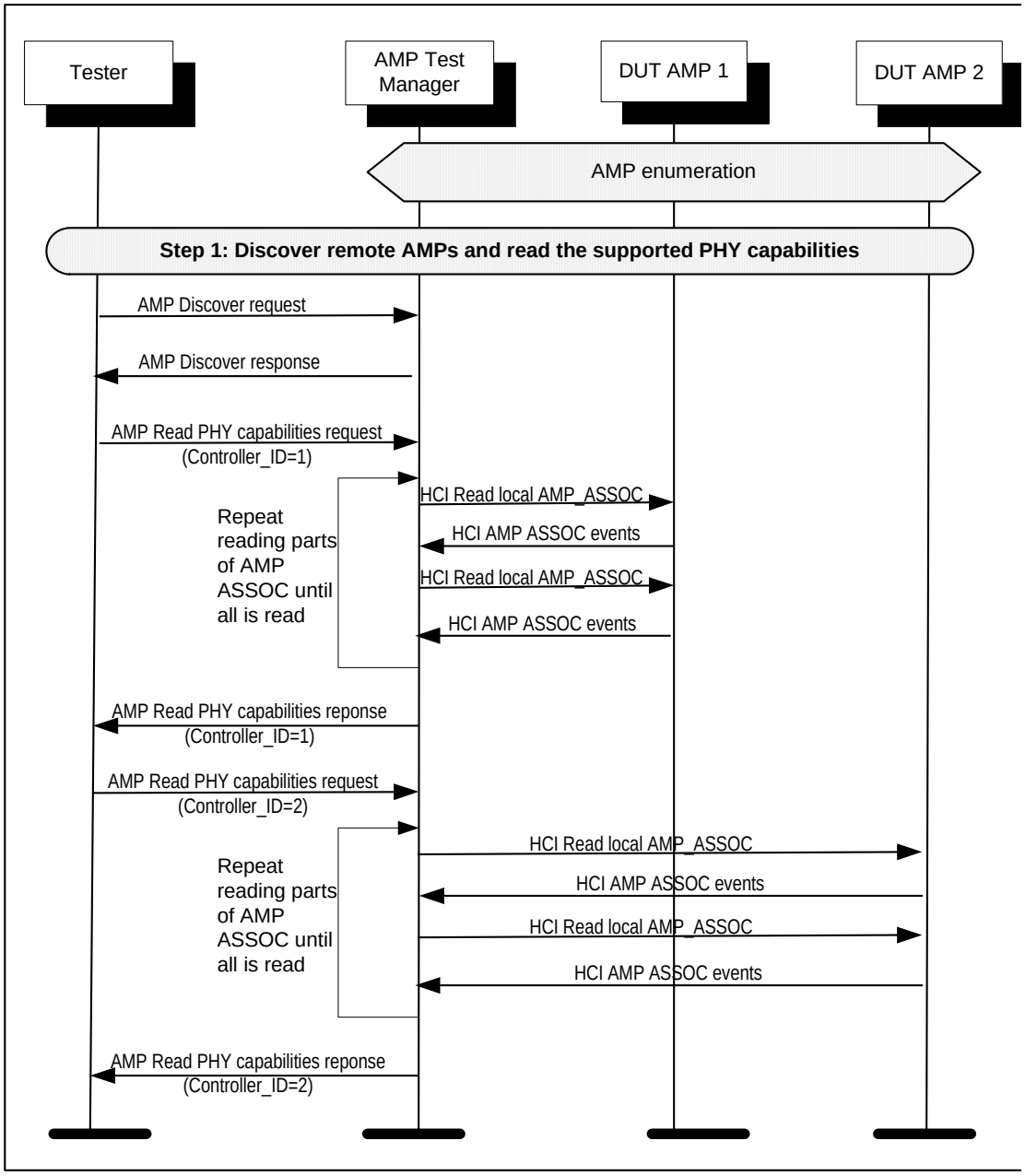

Figure 4.50: Discover remote AMP and theire PHY capabilities

Step 2: In order to configure a transmitter test, the Tester sends an HCI_AMP_Test_Command to the AMP Test Manager of the DUT using the L2CAP AMP Test Message for the AMP Controller indicated by the Controller_ID. The AMP Test Manager sends on the HCI_AMP_Test_Command on to the AMP indicated by the Controller_ID. When the HCI_AMP_Start_Test_Event is returned from the AMP controller, the event will be sent via the AMP Test Manager back to the Tester within an L2CAP AMP Test message.

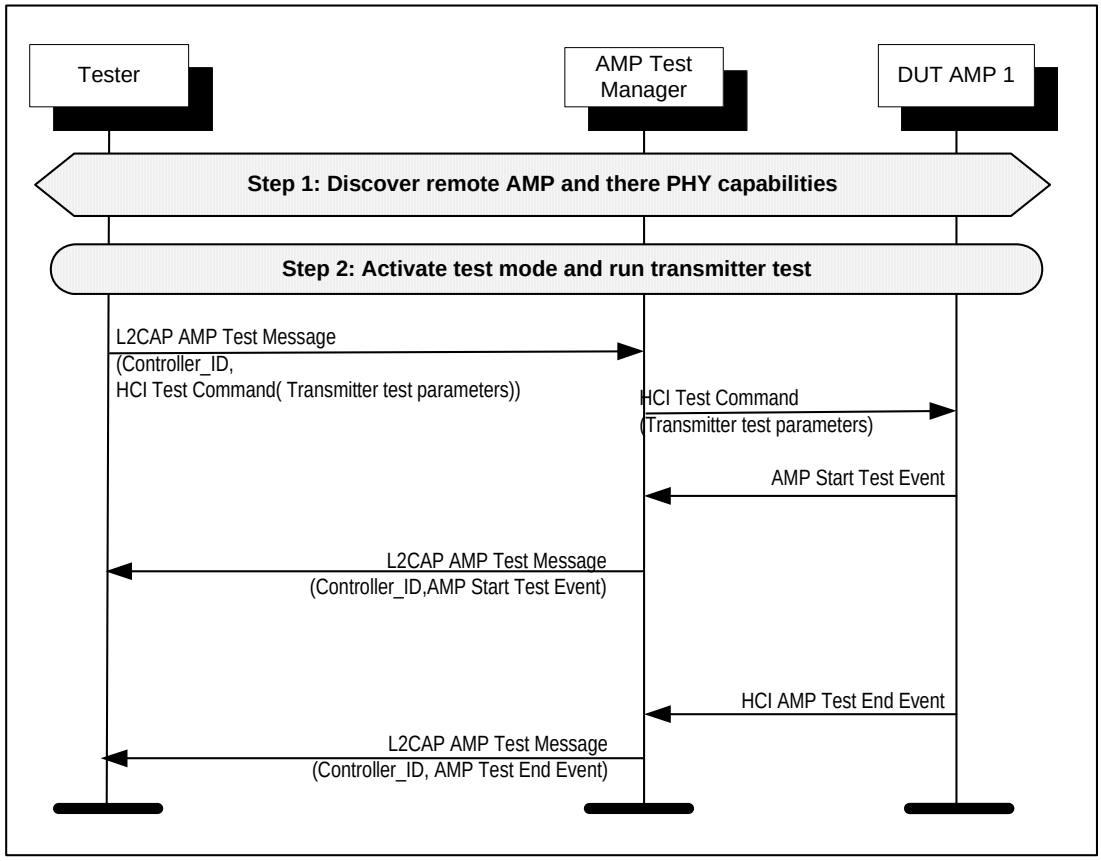

Figure 4.51: Activate test mode and run a transmitter test

Step 3: In order to Enable AMP Receiver Reports, the Tester sends an AMP test command to the AMP Test Manager of the DUT using the L2CAP AMP Test message for the AMP Controller indicated by the Controller_ID. The Command_Complete_Event is returned to the Tester via the AMP Test Manager in an L2CAP AMP Test Message.

In order to configure a receiver test, the Tester sends an HCI_AMP_Test_Command to the AMP Test Manager of the DUT using the L2CAP AMP Test Message for the AMP controller indicated by the Controller_ID. The AMP Test Manager sends on the HCI_AMP_Test_Command on to the AMP indicated by the Controller_ID. The HCI_AMP_Start_Event is returned to the Tester via the AMP Test Manager in an L2CAP AMP Test Message.

AMP_Receiver_Reports and the HCI_Test_End_Event are sent back to the Tester via the AMP Test Manager from the controller and then the Recever reports is disabled by the Tester using the HCI_Enable_AMP_Receiver_Reports command.

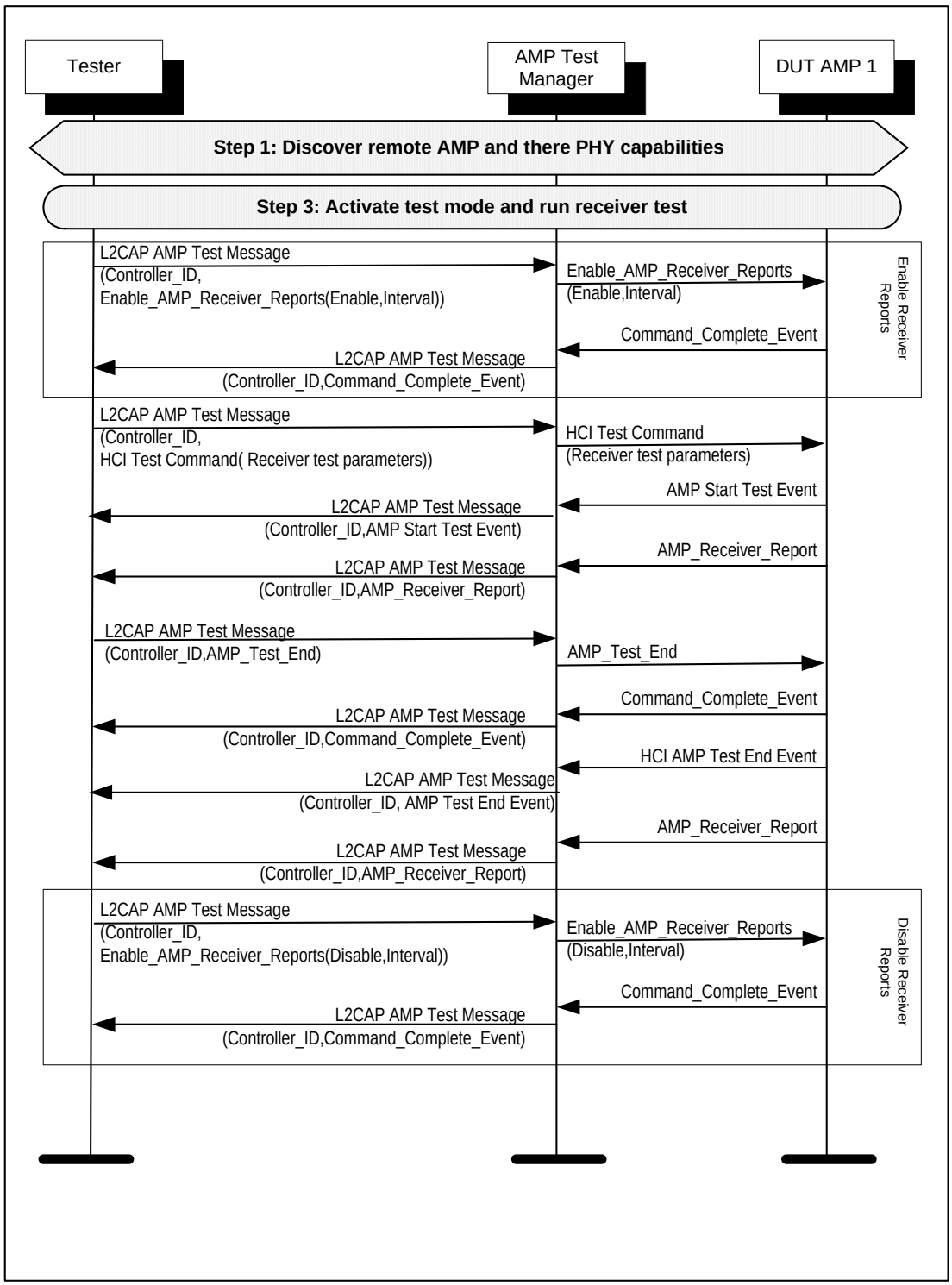

Figure 4.52: Configure and run a receiver test with Receiver reports on an AMP

5 SYNCHRONOUS CONNECTION ESTABLISHMENT AND DETACHMENT

5.1 SYNCHRONOUS CONNECTION SETUP

Using the HCI_Setup_Synchronous_Connection command, a host can add a synchronous logical channel to the link. A synchronous logical link can be provided by creating a SCO or an eSCO logical transport.

Note: An ACL Connection must be established before a synchronous connection can be created.

Step 1a: Master device requests a synchronous connection with a device. (See Figure 5.1 on page 791.)

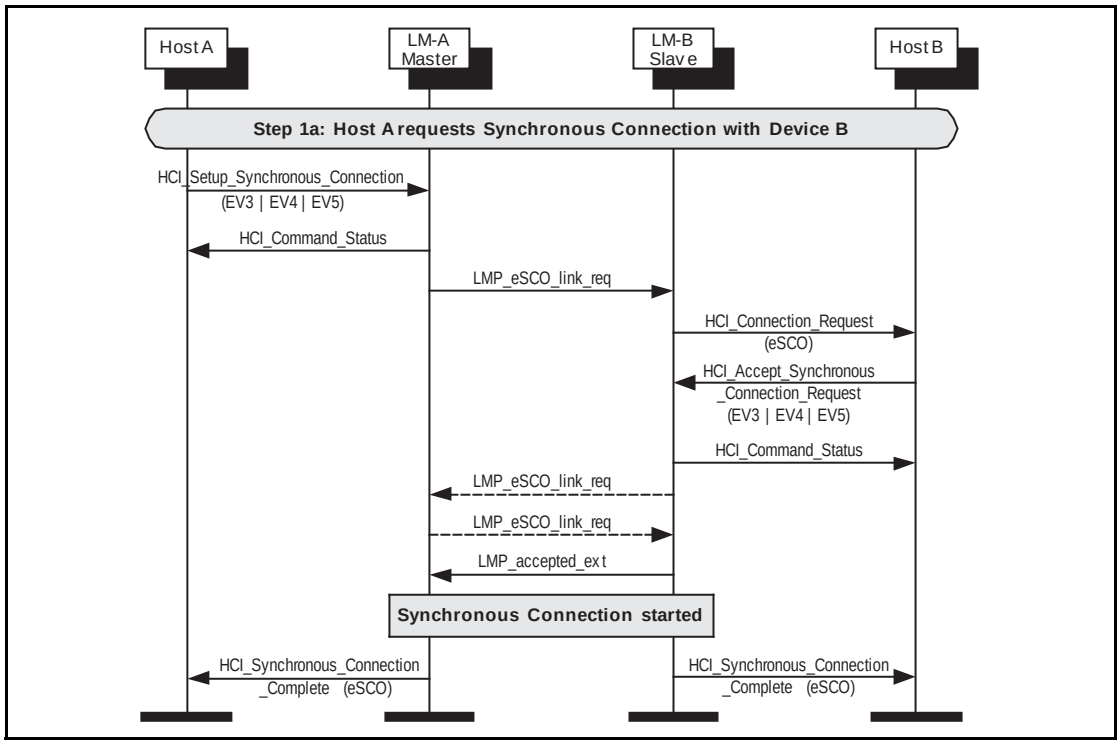

Figure 5.1: Master requests synchronous EV3, EV4 OR EV5 connection.

Step 1b: Slave device requests a synchronous connection with a device. (See Figure 5.2 on page 792.)

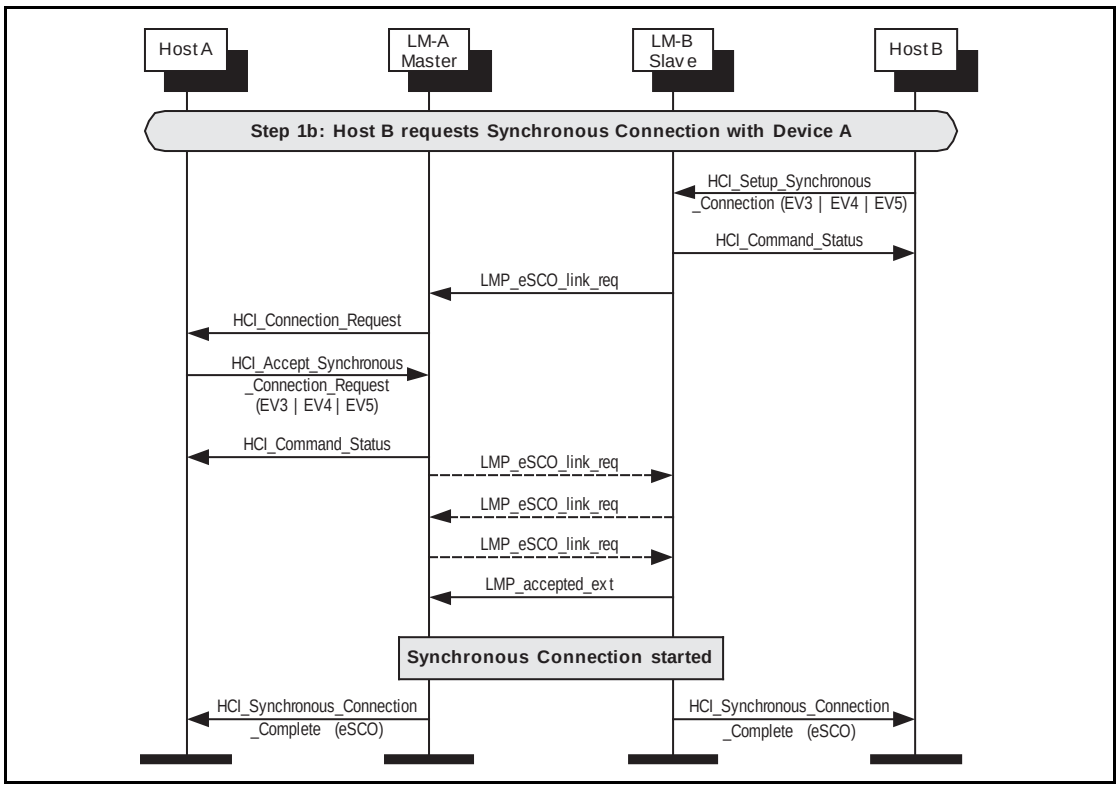

Figure 5.2: Slave requests synchronous EV3, EV4 OR EV5 connection.

Step 1c: Master device requests a SCO connection with a device. (See Figure 5.3 on page 792.)

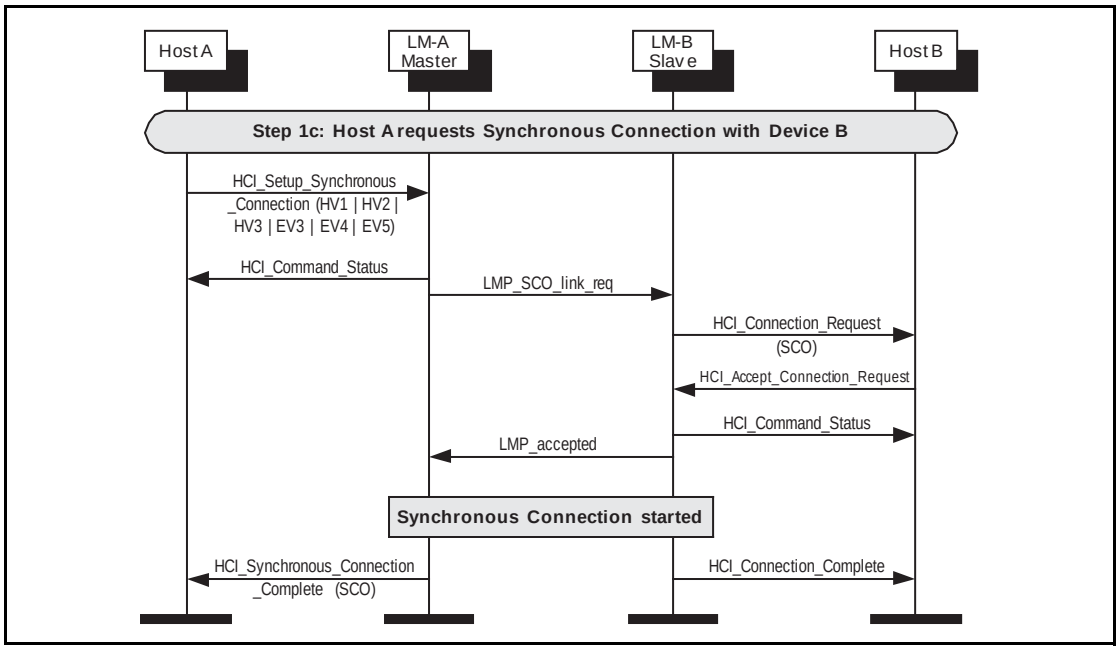

Figure 5.3: Master requests synchronous connection using SCO.

Step 1d: Master device requests a SCO connection with a device.
(See Figure 5.4 on page 793.)

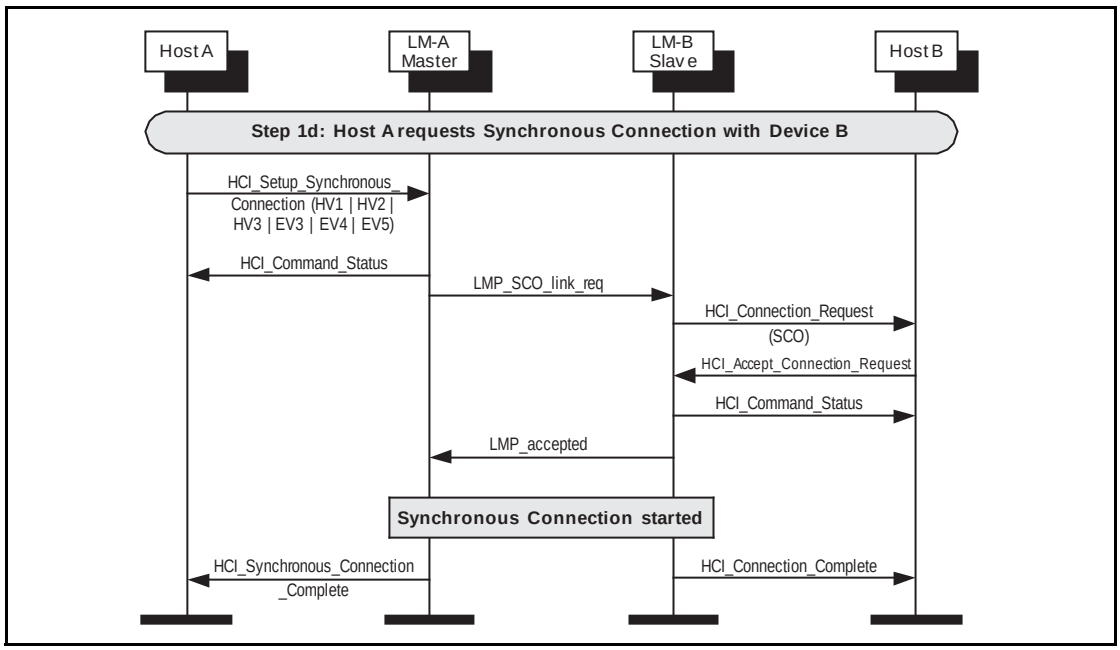

Figure 5.4: Master requests synchronous connection with legacy slave.

Step 1e: Host device requests a SCO connection with a device.
(See Figure 5.5 on page 793.)

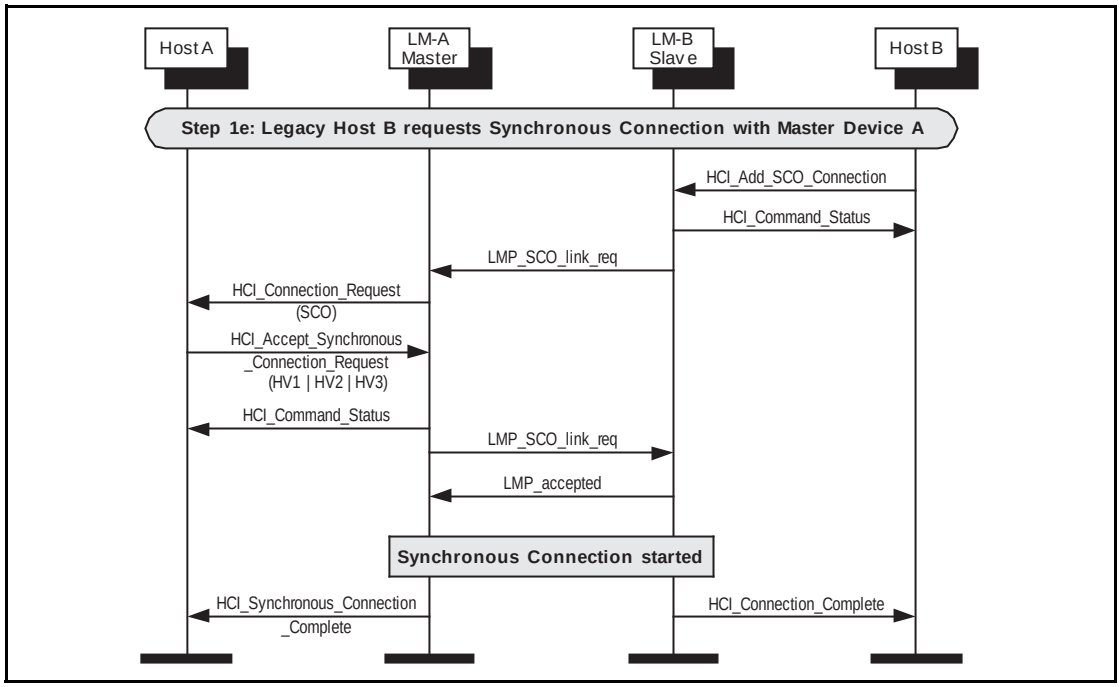

Figure 5.5: Any device that supports only SCO connections requests a synchronous connection with a device.

Step 2a: Master renegotiates eSCO connection (See Figure 5.6 on page 794.)

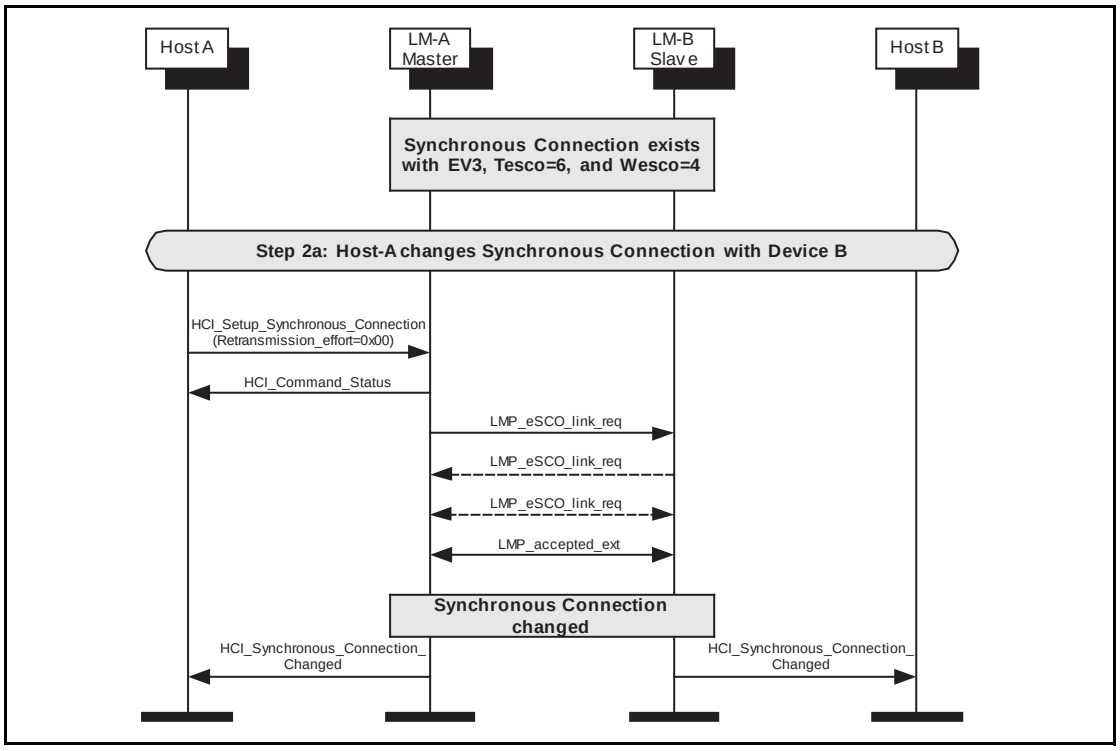

Figure 5.6: Master renegotiates eSCO connection.

Step 2b: Slave renegotiates eSCO connection (See Figure 5.7 on page 794.)

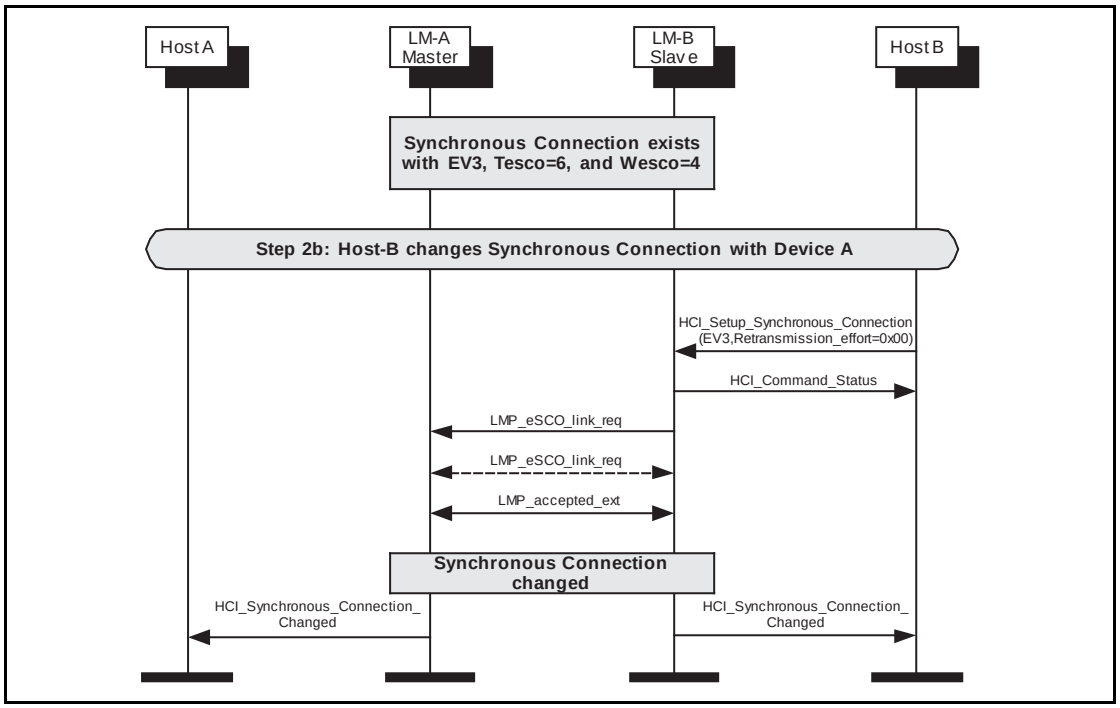

Figure 5.7: Slave renegotiates eSCO connection.

Step 3a: eSCO Disconnection. (See Figure 5.8 on page 795.)

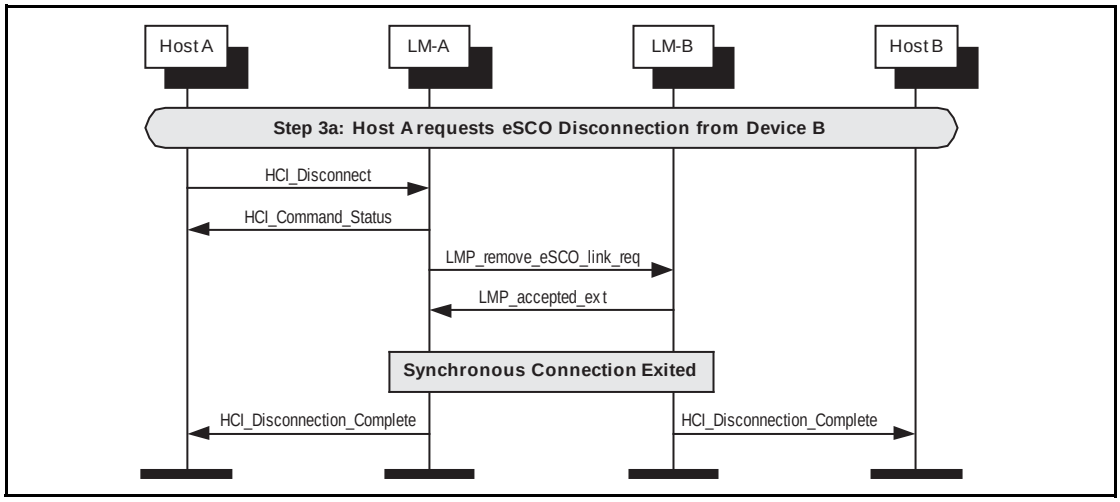

Figure 5.8: Synchronous disconnection of eSCO connection.

Step 3b: SCO Disconnection. (See Figure 5.9 on page 795.)

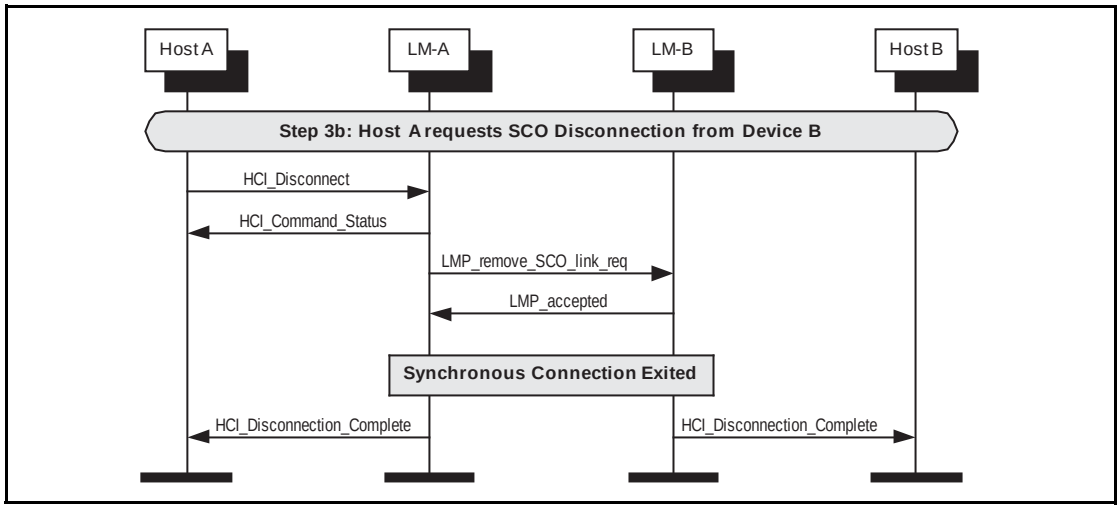

Figure 5.9: Synchronous disconnection of SCO connection.

6 SNIFF, HOLD AND PARK

Entry into Sniff mode, Hold mode or Park state requires an established ACL Connection.

6.1 SNIFF MODE

The HCI_Sniff_Mode command is used to enter sniff mode. The HCI_Exit_Sniff_Mode command is used to exit sniff mode.

Step 1: Host requests to enter sniff mode. Multiple LMP_sniff_req PDUs may be sent as the parameters for sniff mode are negotiated. (See Figure 6.1 on page 796.)

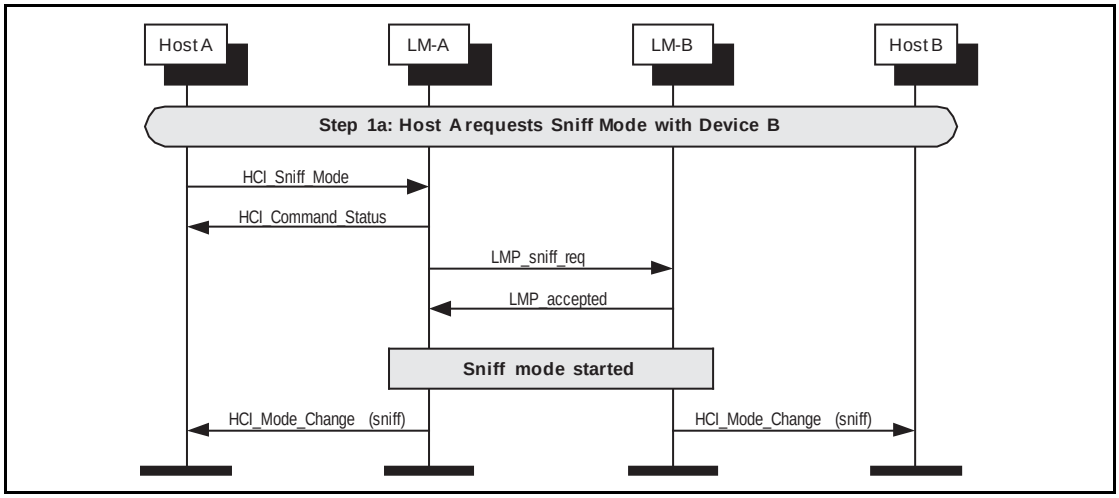

Figure 6.1: Sniff mode request.

Step 2: Host requests to exit sniff mode. (See Figure 6.2 on page 796.)

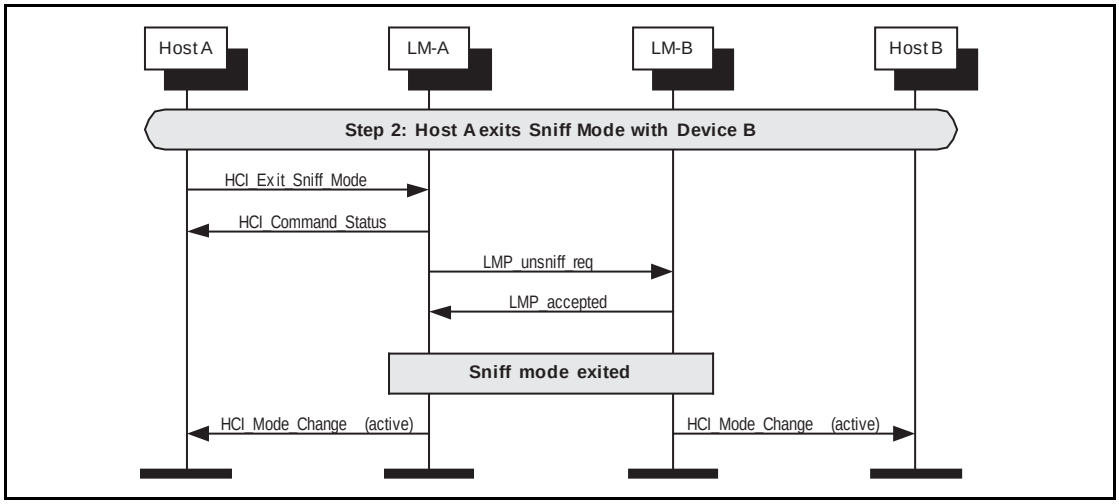

Figure 6.2: Exit sniff mode request.

6.2 HOLD MODE

The HCI_Hold_Mode command can be used to place a device into hold mode. The Controller may do this by either negotiating the hold mode parameters or forcing hold mode. Hold mode will automatically end after the negotiated length of time.

Step 1a: A host requests hold mode. (See Figure 6.3 on page 797.)

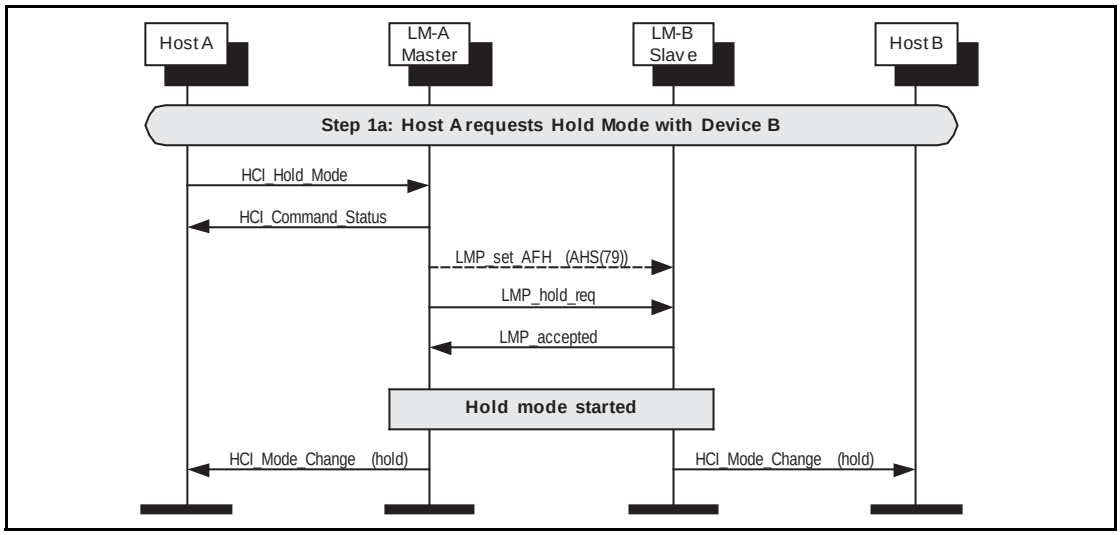

Figure 6.3: Hold request.

Step 1b: A host may force hold mode. (See Figure 6.4 on page 797.)

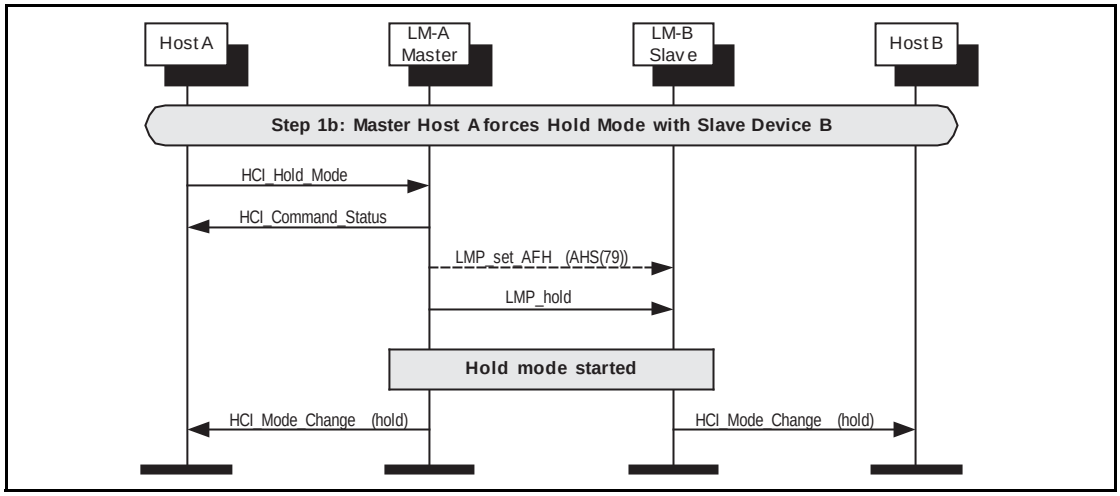

Figure 6.4: Master forces hold mode.

Step 1c: A slave device requests hold mode. (See Figure 6.5 on page 798.)

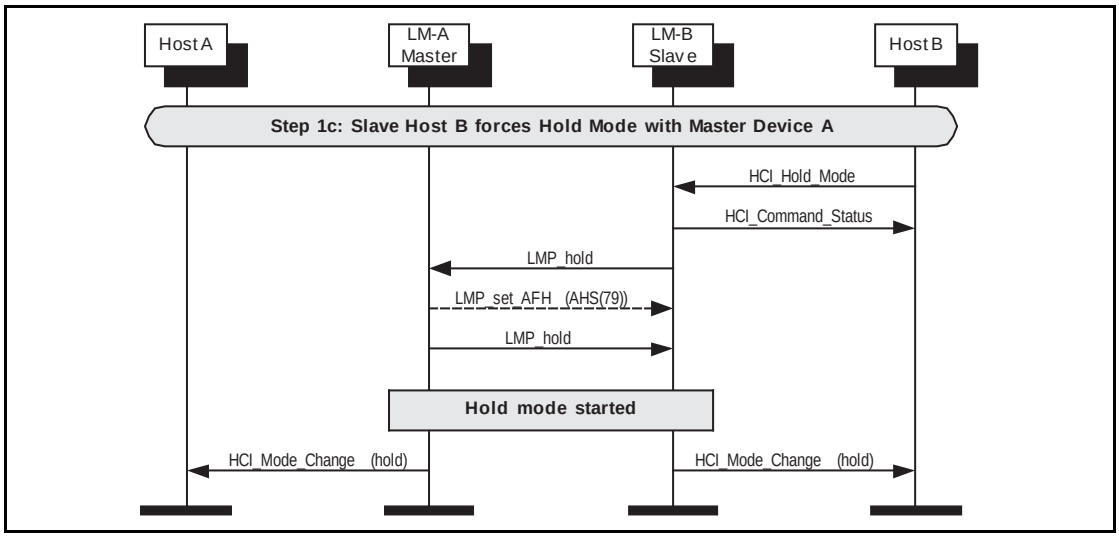

Figure 6.5: Slave forces hold mode.

Step 2: When hold mode completes the hosts are notified using the HCI_Mode_Change event. (See Figure 6.6 on page 798.)

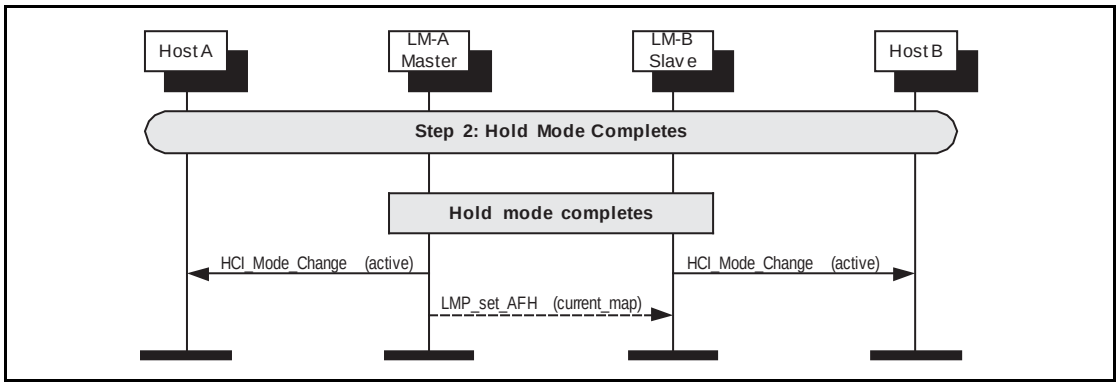

Figure 6.6: Hold mode completes.

6.3 PARK STATE

Park state can be entered by using the HCI_Park_State command.

Step 1a: The master requests to place the slave in the park state. Before sending the LMP_park_req PDU, the master may disable AFH by setting the connection into AHS(79). (See Figure 6.7 on page 799.)

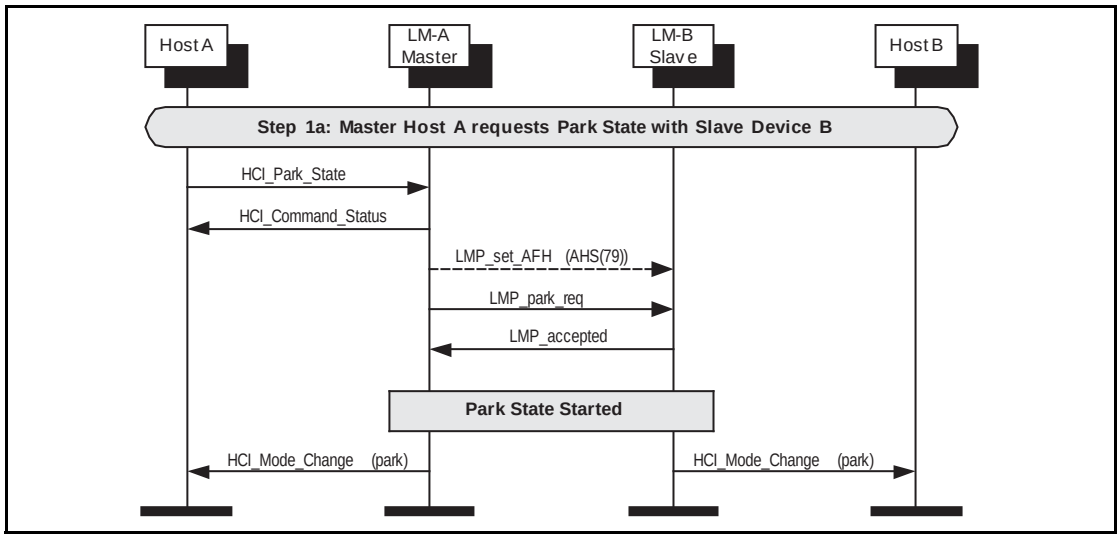

Figure 6.7: Park state request from master.

Step 1b: The slave requests to be placed in the park state. Before sending the LMP_park_req PDU back to the slave, the master may disable AFH by setting the connection into AHS(79). (See Figure 6.8 on page 799.)

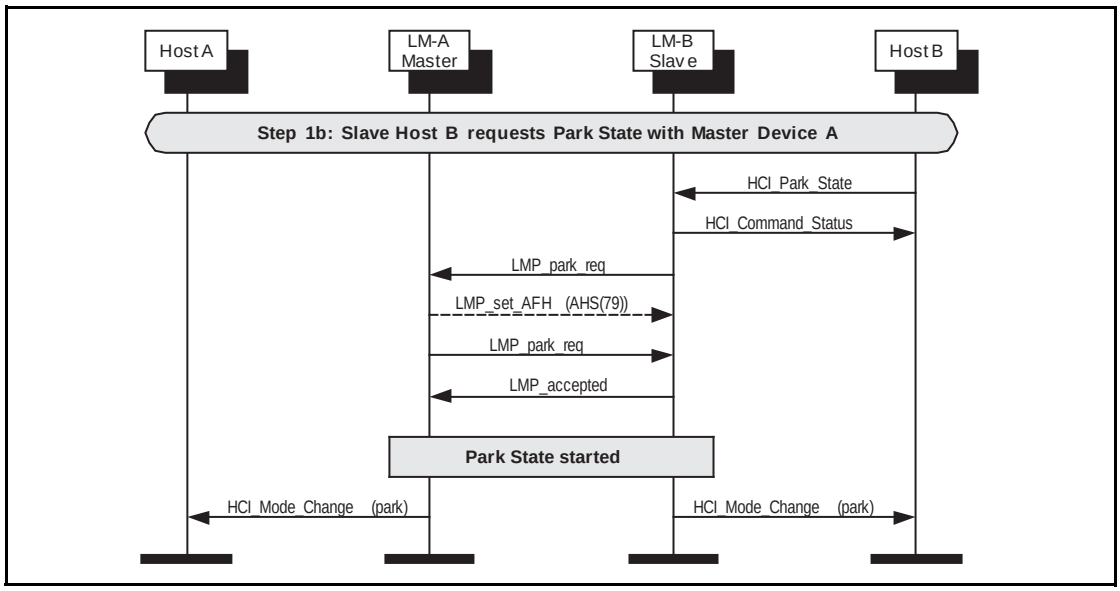

Figure 6.8: Park state request from slave.

Step 2: When in the park state, a slave still needs to unparked for link supervision purposes. The master sends an LMP_unpark_PM_ADDR_req PDU or an LMP_unpark_BD_ADDR_req PDU to the slave during the beacon. Only the PM_ADDR version is illustrated in the figure. (See Figure 6.9 on page 800.)

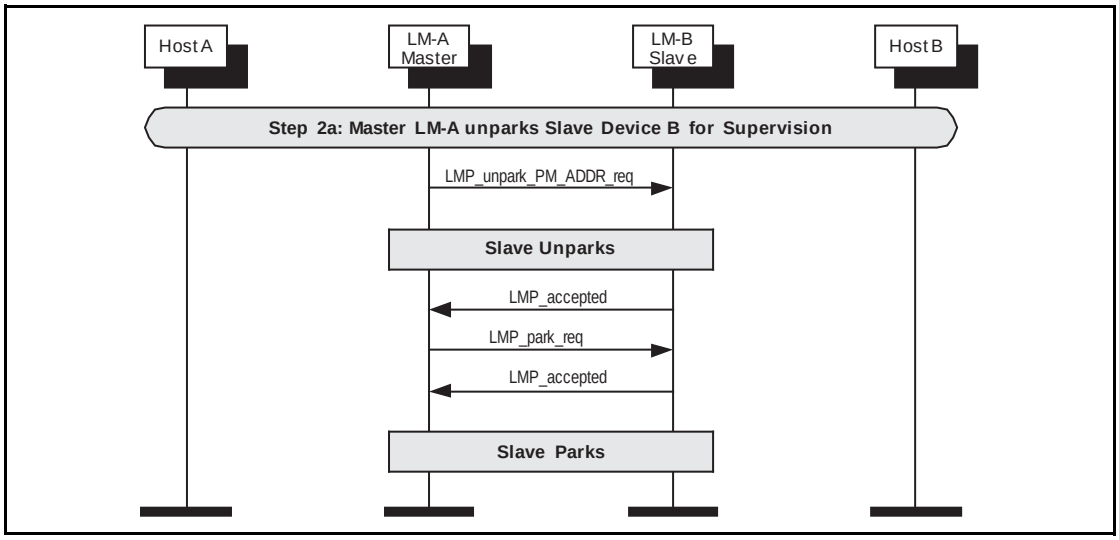

Figure 6.9: Master unparks slave for supervision.

Step 3a: A master may unpark a slave to exit park state. The master should re-enable AFH by setting the current AFH channel map to the unparked slave. (See Figure 6.10 on page 800.)

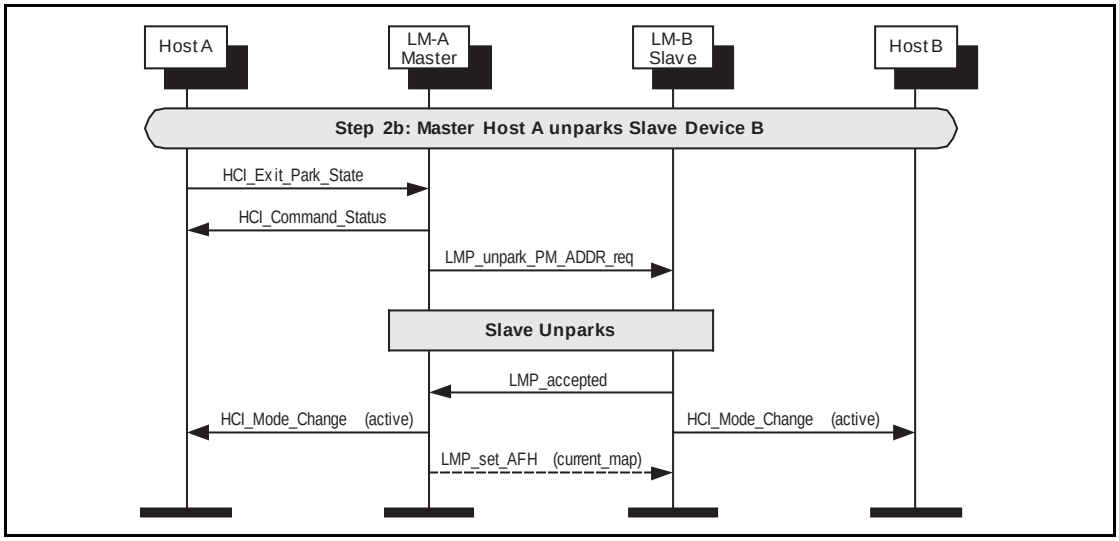

Figure 6.10: Master exits park state with slave.

Step 3b: A slave may request to be unparked by sending a message in an access window. It will then receive instructions from the master to unpark. The master should re-enable AFH by setting the current AFH channel map to the unparked slave. (See Figure 6.11 on page 801.)

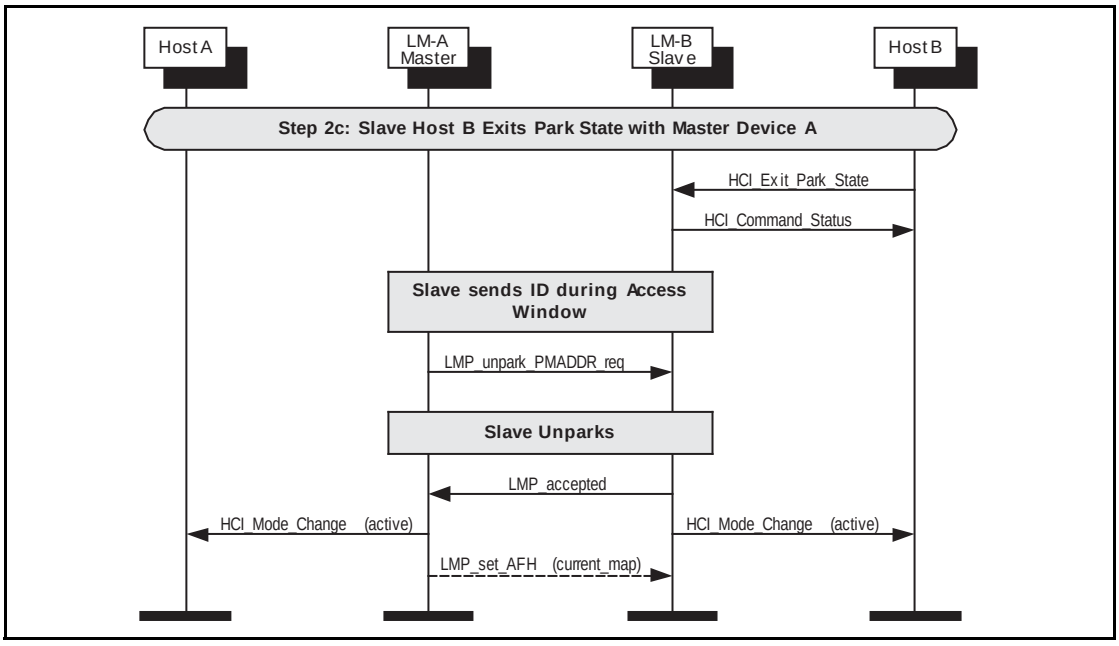

Figure 6.11: Slave exits park state with master.

7 BUFFER MANAGEMENT, FLOW CONTROL

Buffer management is very important for resource limited devices. This can be achieved on the Host Controller Interface using the HCI_Read_Buffer_Size command, and the HCI_Number_Of_Completed_Packets event, and the HCI_Set_Host_Controller_To_Host_Flow_Control, HCI_Host_Buffer_Size and HCI_Host_Number_Of_Completed_Packets commands.

Step 1: During initialization, the host reads the buffer sizes available in the Controller. When an HCI Data Packet has been transferred to the remote device, and a Baseband acknowledgement has been received for this data, then an HCI_Number_Of_Completed_Packets event will be generated. (See Figure 7.1 on page 802.)

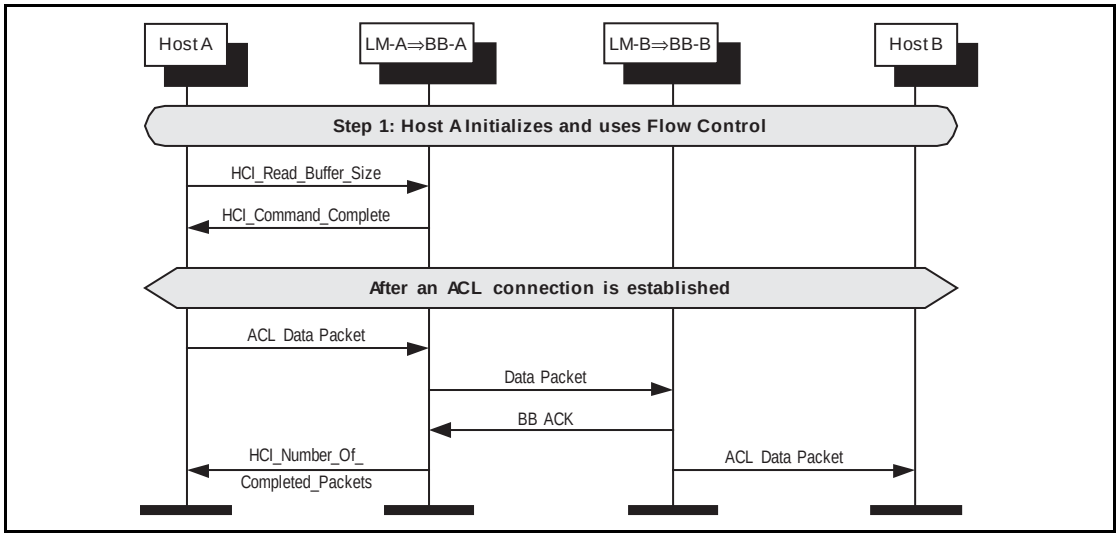

Figure 7.1: Host to Controller flow control.

Step 2: During initialization, the host notifies the Controller that host flow control shall be used, and then the host buffer sizes available. When a data packet has been received from a remote device, an HCI Data Packet is sent to the host from the Controller, and the host shall acknowledge its receipt by sending HCI_Host_Number_Of_Completed_Packets. (See Figure 7.2 on page 803.)

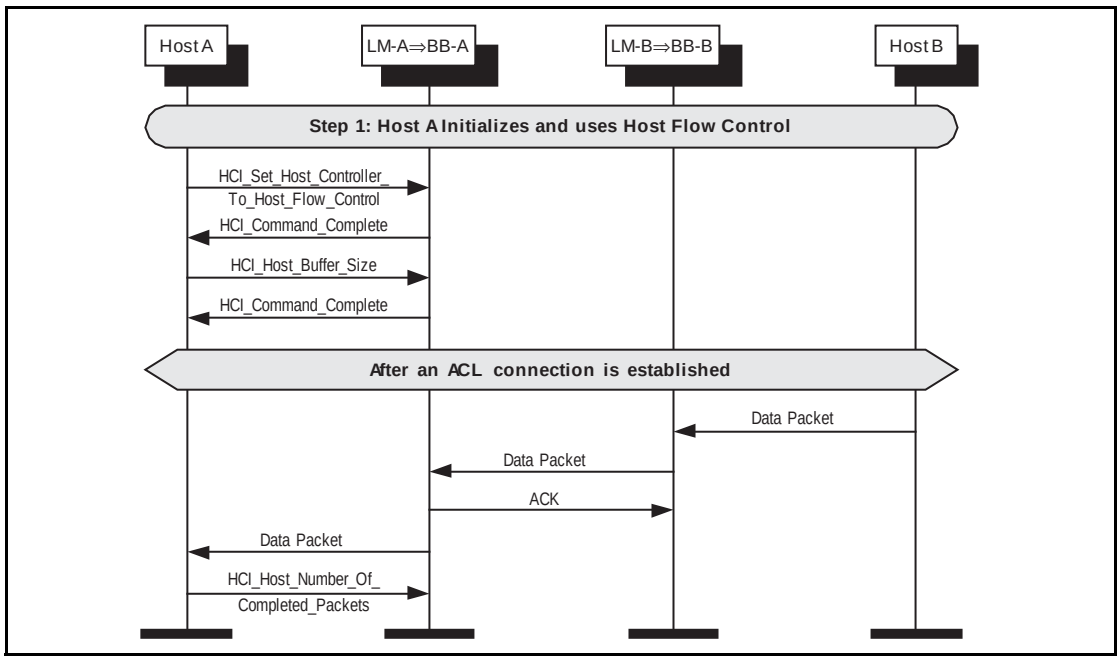

Figure 7.2: Controller to Host flow control.

8 LOOPBACK MODE

The loopback modes are used for testing of a device only.

8.1 LOCAL LOOPBACK MODE

The local loopback mode is used to loopback received HCI Commands, and HCI ACL and HCI Synchronous packets sent from the Host to the Controller.

Step 1: The host enters local loopback mode. Four connection complete events are generated and then a command complete event.
(See Figure 8.1 on page 804.)

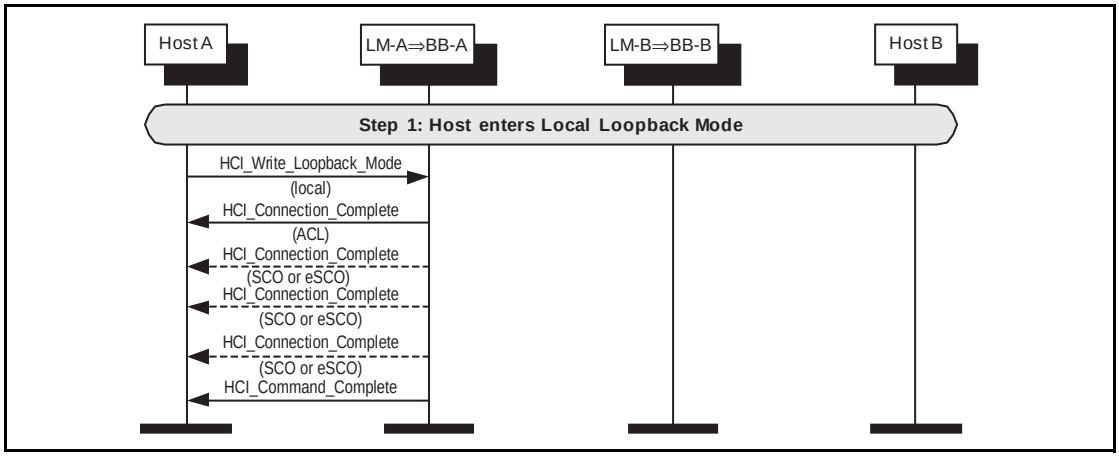

Figure 8.1: Entering local loopback mode.

Step 2a: The host sending HCI Data Packet will receive the exact same data back in HCI Data Packets from the Controller. (See Figure 8.2 on page 804.)

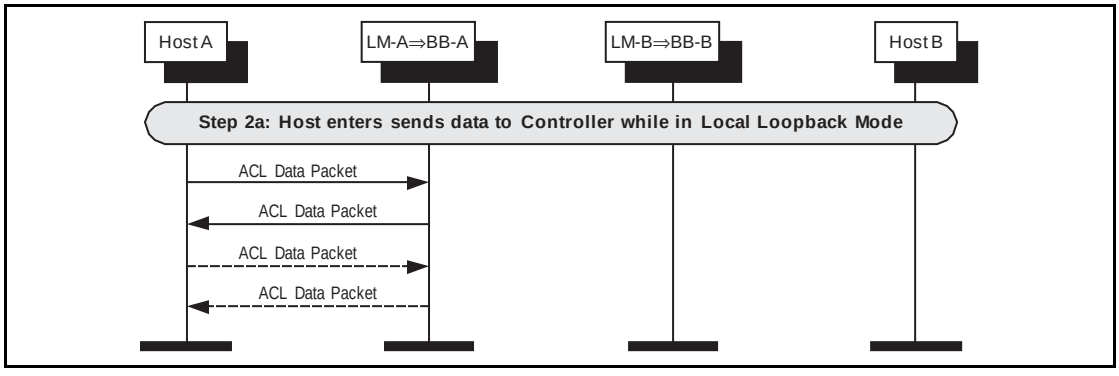

Figure 8.2: Looping back data in local loopback mode.

Step 2b: The host sending most HCI Command Packets to the Controller will receive an HCI_Loopback_Command event with the contents of the HCI Command Packet in the payload. (See Figure 8.3 on page 805.)

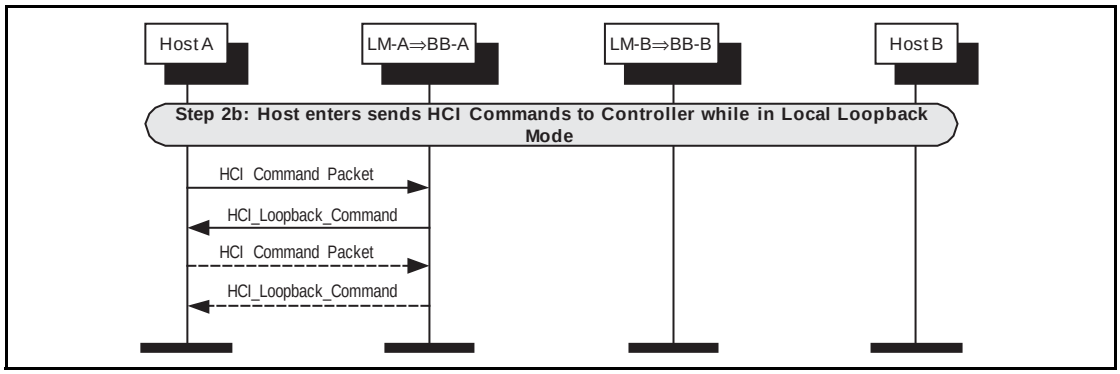

Figure 8.3: Looping back commands in local loopback mode.

Step 3: The host exits local loopback mode. Multiple disconnection complete events are generated before the command complete event.
(See Figure 8.4 on page 805.)

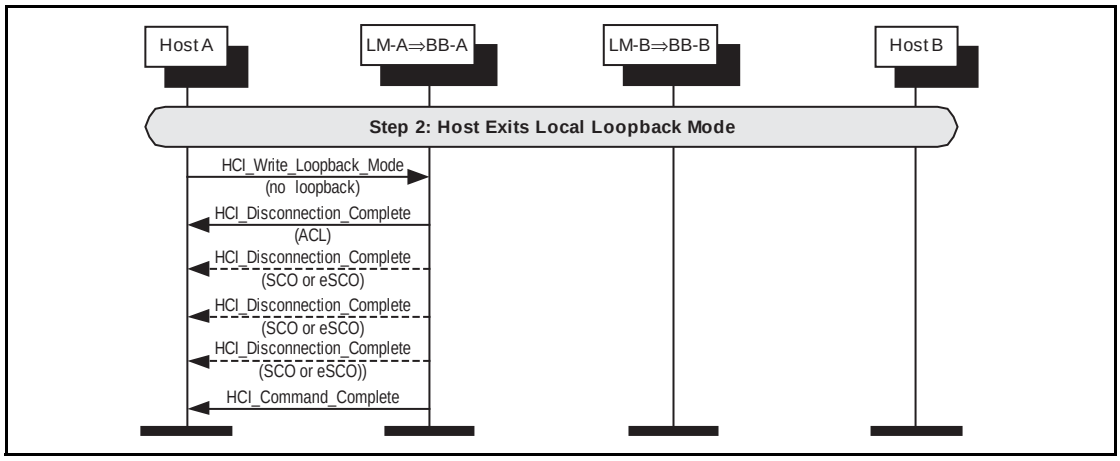

Figure 8.4: Exiting local loopback mode.

8.2 REMOTE LOOPBACK MODE

The remote loopback mode is used to loopback data to a remote device over the air.

Step 1: The remote host first sets up an connection to the local device. The local device then enables remote loopback. (See Figure 8.5 on page 806.)

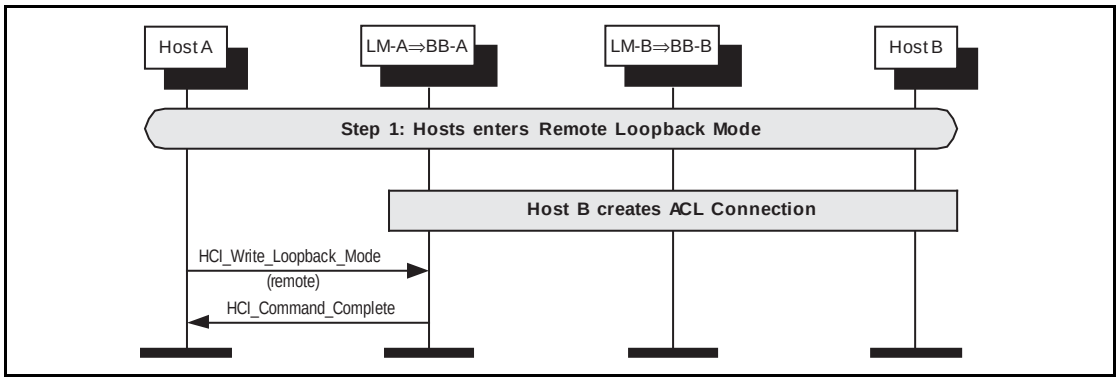

Figure 8.5: Entering remote loopback mode.

Step 2: Any data received from the remote host will be looped back in the Controller of the local device. (See Figure 8.6 on page 806.)

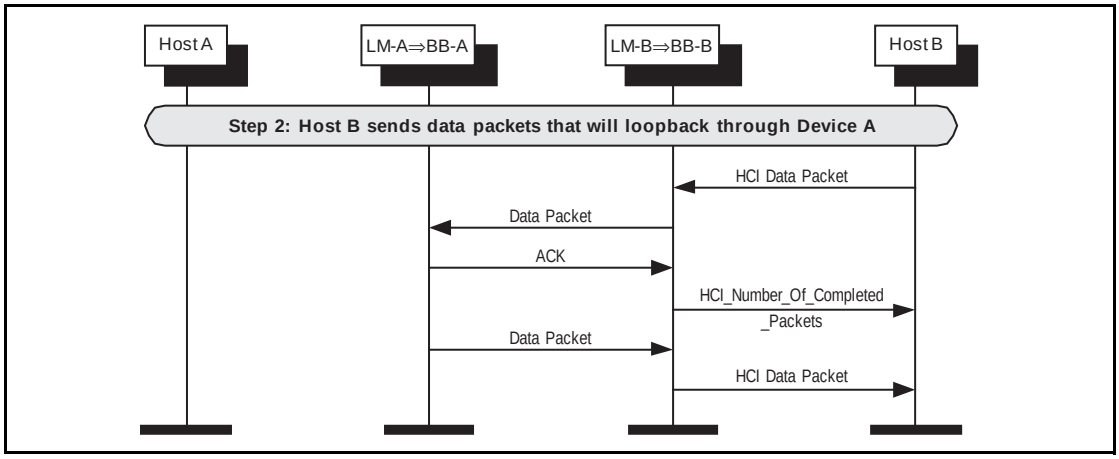

Figure 8.6: Looping back data in Remote Loopback Mode.

Step 3: The local host exits remote loopback mode. Any connections can then be disconnected by the remote device. (See Figure 8.7 on page 807.)

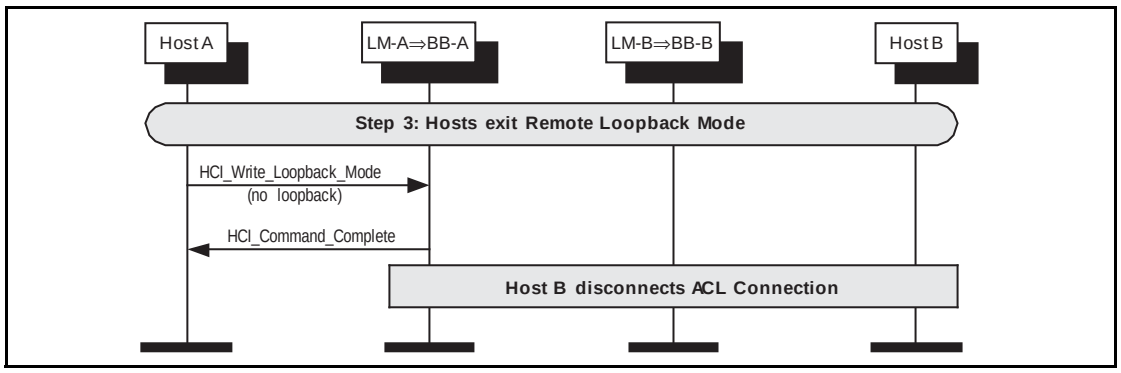

Figure 8.7: Exiting remote loopback mode.

9 LIST OF FIGURES

Figure 1.1: Example MSC. 740
Figure 2.1: Remote name request. 741
Figure 2.2: Remote name request if no current baseband connection. 742
Figure 2.3: Remote name request with baseband connection. 743
Figure 2.4: Host A starts inquiry procedure. 743
Figure 2.5: LM-A performs inquiry and reports result. 744
Figure 2.6: Host A cancels inquiry. 744
Figure 2.7: LM-A terminates current inquiry. 745
Figure 2.8: Host A starts periodic inquiry. 745
Figure 2.9: LM-A periodically performs an inquiry and reports result. 746
Figure 2.10: LM-A terminates current inquiry. 746
Figure 2.11: Host A decides to exit periodic inquiry. 746
Figure 3.1: Overview diagram for connection setup. 747
Figure 3.2: Host A requests connection with device B. 748
Figure 3.3: LM-A and LM-B exchange features. 748
Figure 3.4: LM-A requests host connection. 748
Figure 3.5: Device B rejects connection request. 749
Figure 3.6: Device B accepts connection request. 749
Figure 3.7: Device B accepts connection requests as master. 750
Figure 3.8: LM-A starts adaptive frequency hopping. 750
Figure 3.9: Authentication initiated. 751
Figure 3.10: Pairing during connection setup. 752
Figure 3.11: Authentication during connection setup. 753
Figure 3.12: Starting encryption during connection setup. 753
Figure 3.13: LM-A and LM-B finishes connection setup. 754
Figure 3.14: Host A decides to disconnect. 754
Figure 4.1: Authentication requested. 755
Figure 4.2: Simple Pairing Flow Diagram 756
Figure 4.3: Optional OOB Information Collection 757
Figure 4.4: Enable Simple Pairing 757
Figure 4.5: L2CAP Connection Request for a Secure Service 758
Figure 4.6: Optional OOB Information Transfer 758
Figure 4.7: Start Simple Pairing 759
Figure 4.8: IO Capability Exchange 759
Figure 4.9: Public Key Exchange 760
Figure 4.10: Numeric Comparison Authentication 761
Figure 4.11: Numeric Comparison Authentication (Failure on Initiating Side) 762
Figure 4.12: Numeric Comparison Failure on Responding Side 763
Figure 4.13: Passkey Entry Authentication 764

Figure 4.14: Passkey Entry Failure on Responding Side 765
Figure 4.15: Passkey Entry Failure on Initiating Side 765
Figure 4.16: OOB Authentication 766
Figure 4.17: OOB Authentication failure on initiating side 766
Figure 4.18: DHKey Checks 767
Figure 4.19: Calculate Link Key 768
Figure 4.20: Start Encryption 768
Figure 4.21: L2CAP Connection Response 769
Figure 4.22: Link Supervision Timeout Event 769
Figure 4.23: Encryption requested. 770
Figure 4.24: Encryption off requested. 770
Figure 4.25: Change connection link key. 771
Figure 4.26: Change Connection Link Key with Encryption Pause Resume 772
Figure 4.27: Change to master link key. 773
Figure 4.28: Change to semi permanent link key. 774
Figure 4.29: Read remote supported features. 775
Figure 4.30: Read remote extended features. 775
Figure 4.31: Read clock offset. 776
Figure 4.32: Role Switch on an Encrypted link using encryption pause and resume. 777
Figure 4.33: Refreshing encryption keys using encryption pause and resume 778
Figure 4.34: Read remote version information. 778
Figure 4.35: QoS flow specification. 779
Figure 4.36: Master requests role switch. 779
Figure 4.37: Slave requests role switch. 780
Figure 4.38: Role switch is performed. 780
Figure 4.39: Overview diagram for Physical Link creation and disconnection 781
Figure 4.40: Get remote AMP data 781
Figure 4.41: Host A tells its Controller to create the physical link 782
Figure 4.42: Host A tells Host B to accept an incoming physical link 782
Figure 4.43: A and B establish AMP physical link security 783
Figure 4.44: Host A disconnects the physical link 783
Figure 4.45: Controller reports to its Host of Link Loss 784
Figure 4.46: Guaranteed Logical Link Creation 785
Figure 4.47: Host A disconnects the logical link 786
Figure 4.48: Host A modifies Flow_Spec on an existing logical link 786
Figure 4.49: Overview diagram for AMP test mode 787
Figure 4.50: Discover remote AMP and theire PHY capabilities 788
Figure 4.51: Activate test mode and run a transmitter test 789

Figure 4.52: Configure and run a receiver test with Receiver reports on an AMP 790
Figure 5.1: Master requests synchronous EV3, EV4 OR EV5 connection. 791
Figure 5.2: Slave requests synchronous EV3, EV4 OR EV5 connection. . 792
Figure 5.3: Master requests synchronous connection using SCO. 792
Figure 5.4: Master requests synchronous connection with legacy slave. . 793
Figure 5.5: Any device that supports only SCO connections requests a synchronous connection with a device. 793
Figure 5.6: Master renegotiates eSCO connection. 794
Figure 5.7: Slave renegotiates eSCO connection. 794
Figure 5.8: Synchronous disconnection of eSCO connection. 795
Figure 5.9: Synchronous disconnection of SCO connection. 795
Figure 6.1: Sniff mode request. 796
Figure 6.2: Exit sniff mode request. 796
Figure 6.3: Hold request. 797
Figure 6.4: Master forces hold mode. 797
Figure 6.5: Slave forces hold mode. 798
Figure 6.6: Hold mode completes. 798
Figure 6.7: Park state request from master. 799
Figure 6.8: Park state request from slave. 799
Figure 6.9: Master unparks slave for supervision. 800
Figure 6.10: Master exits park state with slave. 800
Figure 6.11: Slave exits park state with master. 801
Figure 7.1: Host to Controller flow control. 802
Figure 7.2: Controller to Host flow control. 803
Figure 8.1: Entering local loopback mode. 804
Figure 8.2: Looping back data in local loopback mode. 804
Figure 8.3: Looping back commands in local loopback mode. 805
Figure 8.4: Exiting local loopback mode. 805
Figure 8.5: Entering remote loopback mode. 806
Figure 8.6: Looping back data in Remote Loopback Mode. 806
Figure 8.7: Exiting remote loopback mode. 807

SAMPLE DATA

This appendix contains sample data for various parts of the Bluetooth baseband specification. All sample data are provided for reference purpose only; they are intended as a complement to the definitions provided elsewhere in the specification. They can be used to check the behavior of an implementation and avoid misunderstandings. Fulfilling these sample data is a necessary but not sufficient condition for an implementation to be fully Bluetooth compliant.

CONTENTS

1 Encryption Sample Data 815
1.1 Generating Kc' from Kc, ... 815
1.2 First Set of Sample Data 818
1.3 Second Set of Sample Data 826
1.4 Third Set of Samples 834
1.5 Fourth Set of Samples 842

2 Frequency Hopping Sample Data 850
2.1 First set 851
2.2 Second set 857
2.3 Third set 863

3 Access Code Sample Data 869

4 HEC and Packet Header Sample Data 872

5 CRC Sample Data 873

6 Complete Sample Packets 874
6.1 Example of DH1 Packet 874
6.2 Example of DM1 Packet 875

7 Simple Pairing Sample Data 876
7.1 P-192 Sample Data 876
7.1.1 Data Set 1 876
7.1.2 Data Set 2 876
7.1.3 Data Set 3 876
7.1.4 Data Set 4 876
7.1.5 Data Set 5 876
7.1.6 Data Set 6 877
7.1.7 Data Set 7 877
7.1.8 Data Set 8 877
7.1.9 Data Set 9 877
7.1.10 Data Set 10 877
7.2 Hash Functions Sample Data 877
7.2.1 f1() 878
7.2.2 g() 879
7.2.3 f2() 879
7.2.4 f3() 879
7.2.5 h2() 886

8 Whitening Sequence Sample Data 888

9 FEC Sample Data 891

10 Encryption Key Sample Data 892

10.1 Four Tests of E1 892

10.2 Four Tests of E21 897

10.3 Three Tests of E22 899

10.4 Tests of E22 With Pin Augmenting 901

10.5 Four Tests of E3 911

1 ENCRYPTION SAMPLE DATA

This section contains four sets of sample data for the encryption process.

With respect to the functional description of the encryption engine in the Bluetooth baseband specification, the contents of registers and resulting concurrent values are listed as well. This by no means excludes different implementations (as far as they produce the same encryption stream) but is intended to describe the functional behavior.

In case of misunderstandings or inconsistencies, these sample data form the normative reference.

1.1 GENERATING KC' FROM KC,

where Kc'(x) = g2(x)(Kc(x) mod g1(x)).

```
Note: All polynomials are in hexadecimal notation.
      'L' is the effective key length in bytes.
      The notation 'p: [m]' implies that deg(p(x)) = m.

                              MSB                                     LSB
L = 1
g1:                [8]        00000000 00000000 00000000 0000011d
g2:                [119]      00e275a0 abd218d4 cf928b9b bf6cb08f
Kc:                           a2b230a4 93f281bb 61a85b82 a9d4a30e
Kc mod g1:         [7]        00000000 00000000 00000000 0000009f
g2(Kc mod g1):     [126]      7aa16f39 59836ba3 22049a7b 87f1d8a5
-------------------------------------------------------------
L = 2
g1:                [16]       00000000 00000000 00000000 0001003f
g2:                [112]      0001e3f6 3d7659b3 7f18c258 cff6efef
Kc:                           64e7df78 bb7ccaa4 61433123 5b3222ad
Kc mod g1:         [12]       00000000 00000000 00000000 00001ff0
g2(Kc mod g1):     [124]      142057bb 0bceac4c 58bd142e 1e710a50
-------------------------------------------------------------
L = 3
g1:                [24]       00000000 00000000 00000000 010000db
g2:                [104]      000001be f66c6c3a b1030a5a 1919808b
Kc:                           575e5156 ba685dc6 112124ac edb2c179
Kc mod g1:         [23]       00000000 00000000 00000000 008ddbc8
g2(Kc mod g1):     [127]      d56d0adb 8216cb39 7fe3c591 1ff95618
-------------------------------------------------------------
L = 4
g1:                [32]       00000000 00000000 00000001 000000af
g2:                [96]       00000001 6ab89969 de17467f d3736ad9
Kc:                           8917b4fc 403b6db2 1596b86d 1cb8adab
Kc mod g1:         [31]       00000000 00000000 00000000 aa1e78aa
g2(Kc mod g1):     [127]      91910128 b0e2f5ed a132a03e af3d8cda
-------------------------------------------------------------
```

Sample Data

```
L = 5
g1:                [40]        00000000 00000000 00000100 00000039
g2:                [88]        00000000 01630632 91da50ec 55715247
Kc:                            785c915b dd25b9c6 0102ab00 b6cd2a68
Kc mod g1:         [38]        00000000 00000000 0000007f 13d44436
g2(Kc mod g1):     [126]       6fb5651c cb80c8d7 ea1ee56d f1ec5d02
------------------------------------------------------------
L = 6
g1:                [48]        00000000 00000000 00010000 00000291
g2:                [77]        00000000 00002c93 52aa6cc0 54468311
Kc:                            5e77d19f 55ccd7d5 798f9a32 3b83e5d8
Kc mod g1:         [47]        00000000 00000000 000082eb 4af213ed
g2(Kc mod g1):     [124]       16096bcb afcf8def 1d226a1b 4d3f9a3d
------------------------------------------------------------
```

Sample Data

```
L = 7
g1:                [56]        00000000 00000000 01000000 00000095
g2:                [71]        00000000 000000b3 f7fffce2 79f3a073
Kc:                            05454e03 8ddcfbe3 ed024b2d 92b7f54c
Kc mod g1:         [55]        00000000 00000000 0095b8a4 8eb816da
g2(Kc mod g1):     [126]       50f9c0d4 e3178da9 4a09fe0d 34f67b0e
------------------------------------------------------------
L = 8
g1:                [64]        00000000 00000001 00000000 0000001b
g2:                [63]        00000000 00000000 a1ab815b c7ec8025
Kc:                            7ce149fc f4b38ad7 2a5d8a41 eb15ba31
Kc mod g1:         [63]        00000000 00000000 8660806c 1865deec
g2(Kc mod g1):     [126]       532c36d4 5d0954e0 922989b6 826f78dc
------------------------------------------------------------
L = 9
g1:                [72]        00000000 00000100 00000000 00000609
g2:                [49]        00000000 00000000 0002c980 11d8b04d
Kc:                            5eeff7ca 84fc2782 9c051726 3df6f36e
Kc mod g1:         [71]        00000000 00000083 58ccb7d0 b95d3c71
g2(Kc mod g1):     [120]       016313f6 0d3771cf 7f8e4bb9 4aa6827d
------------------------------------------------------------
L = 10
g1:                [80]        00000000 00010000 00000000 00000215
g2:                [42]        00000000 00000000 0000058e 24f9a4bb
Kc:                            7b13846e 88beb4de 34e7160a fd44dc65
Kc mod g1:         [79]        00000000 0000b4de 34171767 f36981c3
g2(Kc mod g1):     [121]       023bc1ec 34a0029e f798dcfb 618ba58d
------------------------------------------------------------
L = 11
g1:                [88]        00000000 01000000 00000000 0000013b
g2:                [35]        00000000 00000000 0000000c a76024d7
Kc:                            bda6de6c 6e7d757e 8dfe2d49 9a181193
Kc mod g1:         [86]        00000000 007d757e 8dfe88aa 2fcee371
g2(Kc mod g1):     [121]       022e08a9 3aa51d8d 2f93fa78 85cc1f87
------------------------------------------------------------
L = 12
g1:                [96]        00000001 00000000 00000000 000000dd
g2:                [28]        00000000 00000000 00000000 1c9c26b9
Kc:                            e6483b1c 2cdb1040 9a658f97 c4efd90d
Kc mod g1:         [93]        00000000 2cdb1040 9a658fd7 5b562e41
g2(Kc mod g1):     [121]       030d752b 216fe29b b880275c d7e6f6f9
------------------------------------------------------------
L = 13
g1:                [104]       00000100 00000000 00000000 0000049d
g2:                [21]        00000000 00000000 00000000 0026d9e3
Kc:                            d79d281d a2266847 6b223c46 dc0ab9ee
Kc mod g1:         [100]       0000001d a2266847 6b223c45 e1fc5fa6
g2(Kc mod g1):     [121]       03f11138 9cebf919 00b93808 4ac158aa
------------------------------------------------------------
```

```
L = 14
g1:                [112]       00010000 00000000 00000000 0000014f
g2:                [14]        00000000 00000000 00000000 00004377
Kc:                            cad9a65b 9fca1c1d a2320fcf 7c4ae48e
Kc mod g1:         [111]       0000a65b 9fca1c1d a2320fcf 7cb6a909
g2(Kc mod g1):     [125]       284840fd f1305f3c 529f5703 76adf7cf
------------------------------------------------------------
L = 15
g1:                [120]       01000000 00000000 00000000 000000e7
g2:                [7]         00000000 00000000 00000000 00000089
Kc:                            21f0cc31 049b7163 d375e9e1 06029809
Kc mod g1:         [119]       00f0cc31 049b7163 d375e9e1 0602840e
g2(Kc mod g1):     [126]       7f10b53b 6df84b94 f22e566a 3754a37e
------------------------------------------------------------
L = 16
g1:                [128]       00000001 00000000 00000000 00000000 00000000
g2:                [0]         00000000 00000000 00000000 00000001
Kc:                            35ec8fc3 d50ccd32 5f2fd907 bde206de
Kc mod g1:         [125]       35ec8fc3 d50ccd32 5f2fd907 bde206de
g2(Kc mod g1):     [125]       35ec8fc3 d50ccd32 5f2fd907 bde206de
------------------------------------------------------------
```

1.2 FIRST SET OF SAMPLE DATA

```
Initial values for the key, pan address and clock

K'c1[0]   = 00   K'c1[1]   = 00    K'c1[2]   = 00    K'c1[3]  = 00
K'c1[4]   = 00   K'c1[5]   = 00    K'c1[6]   = 00    K'c1[7]  = 00
K'c1[8]   = 00   K'c1[9]   = 00    K'c1[10]  = 00    K'c1[11] = 00
K'c1[12]  = 00   K'c1[13]  = 00    K'c1[14]  = 00    K'c1[15] = 00

Addr1[0] = 00   Addr1[1] = 00    Addr1[2] = 00
Addr1[3] = 00   Addr1[4] = 00    Addr1[5] = 00

CL1[0]  = 00   CL1[1]  = 00    CL1[2]  = 00    CL1[3]  = 00


=============================================================================================
         Fill LFSRs with initial data
=============================================================================================

  t  clk#    LFSR1    LFSR2     LFSR3      LFSR4          X1 X2 X3 X4   Z  C[t+1] C[t] C[t-1]

  0     0    0000000* 00000000* 000000000* 0000000000*     0  0  0  0    0  00     00   00
  1     1    0000000* 00000001* 000000000* 0000000001*     0  0  0  0    0  00     00   00
  2     2    0000000* 00000002* 000000000* 0000000003*     0  0  0  0    0  00     00   00
  3     3    0000000* 00000004* 000000000* 0000000007*     0  0  0  0    0  00     00   00
  4     4    0000000* 00000008* 000000000* 000000000E*     0  0  0  0    0  00     00   00
  5     5    0000000* 00000010* 000000000* 000000001C*     0  0  0  0    0  00     00   00
  6     6    0000000* 00000020* 000000000* 0000000038*     0  0  0  0    0  00     00   00
```

Sample Data

7	7	0000000*	00000040*	000000000*	0000000070*	0	0	0	0	0	00	00	00
8	8	0000000*	00000080*	000000000*	00000000E0*	0	0	0	0	0	00	00	00
9	9	0000000*	00000100*	000000000*	00000001C0*	0	0	0	0	0	00	00	00
10	10	0000000*	00000200*	000000000*	0000000380*	0	0	0	0	0	00	00	00
11	11	0000000*	00000400*	000000000*	0000000700*	0	0	0	0	0	00	00	00
12	12	0000000*	00000800*	000000000*	0000000E00*	0	0	0	0	0	00	00	00
13	13	0000000*	00001000*	000000000*	0000001C00*	0	0	0	0	0	00	00	00
14	14	0000000*	00002000*	000000000*	0000003800*	0	0	0	0	0	00	00	00
15	15	0000000*	00004000*	000000000*	0000007000*	0	0	0	0	0	00	00	00
16	16	0000000*	00008000*	000000000*	000000E000*	0	0	0	0	0	00	00	00
17	17	0000000*	00010000*	000000000*	000001C000*	0	0	0	0	0	00	00	00
18	18	0000000*	00020000*	000000000*	0000038000*	0	0	0	0	0	00	00	00
19	19	0000000*	00040000*	000000000*	0000070000*	0	0	0	0	0	00	00	00
20	20	0000000*	00080000*	000000000*	00000E0000*	0	0	0	0	0	00	00	00
21	21	0000000*	00100000*	000000000*	00001C0000*	0	0	0	0	0	00	00	00
22	22	0000000*	00200000*	000000000*	0000380000*	0	0	0	0	0	00	00	00
23	23	0000000*	00400000*	000000000*	0000700000*	0	0	0	0	0	00	00	00
24	24	0000000*	00800000*	000000000*	0000E00000*	0	1	0	0	1	00	00	00
25	25	0000000*	01000000*	000000000*	0001C00000*	0	0	0	0	0	00	00	00
26	26	0000000	02000000*	000000000*	0003800000*	0	0	0	0	0	00	00	00
27	27	0000000	04000000*	000000000*	0007000000*	0	0	0	0	0	00	00	00
28	28	0000000	08000000*	000000000*	000E000000*	0	0	0	0	0	00	00	00
29	29	0000000	10000000*	000000000*	001C000000*	0	0	0	0	0	00	00	00
30	30	0000000	20000000*	000000000*	0038000000*	0	0	0	0	0	00	00	00
31	31	0000000	40000000*	000000000*	0070000000*	0	0	0	0	0	00	00	00
32	32	0000000	00000001	000000000*	00E0000000*	0	0	0	1	1	00	00	00
33	33	0000000	00000002	000000000*	01C0000000*	0	0	0	1	1	00	00	00
34	34	0000000	00000004	000000000	0380000000*	0	0	0	1	1	00	00	00
35	35	0000000	00000008	000000000	0700000000*	0	0	0	0	0	00	00	00
36	36	0000000	00000010	000000000	0E00000000*	0	0	0	0	0	00	00	00
37	37	0000000	00000020	000000000	1C00000000*	0	0	0	0	0	00	00	00
38	38	0000000	00000040	000000000	3800000000*	0	0	0	0	0	00	00	00
39	39	0000000	00000080	000000000	7000000000*	0	0	0	0	0	00	00	00

Start clocking Summation Combiner

40	1	0000000	00000100	000000000	6000000001	0	0	0	0	0	00	00	00
41	2	0000000	00000200	000000000	4000000003	0	0	0	0	0	00	00	00
42	3	0000000	00000400	000000000	0000000007	0	0	0	0	0	00	00	00
43	4	0000000	00000800	000000000	000000000E	0	0	0	0	0	00	00	00
44	5	0000000	00001001	000000000	000000001D	0	0	0	0	0	00	00	00
45	6	0000000	00002002	000000000	000000003B	0	0	0	0	0	00	00	00
46	7	0000000	00004004	000000000	0000000077	0	0	0	0	0	00	00	00
47	8	0000000	00008008	000000000	00000000EE	0	0	0	0	0	00	00	00
48	9	0000000	00010011	000000000	00000001DD	0	0	0	0	0	00	00	00
49	10	0000000	00020022	000000000	00000003BB	0	0	0	0	0	00	00	00
50	11	0000000	00040044	000000000	0000000777	0	0	0	0	0	00	00	00
51	12	0000000	00080088	000000000	0000000EEE	0	0	0	0	0	00	00	00
52	13	0000000	00100110	000000000	0000001DDD	0	0	0	0	0	00	00	00
53	14	0000000	00200220	000000000	0000003BBB	0	0	0	0	0	00	00	00
54	15	0000000	00400440	000000000	0000007777	0	0	0	0	0	00	00	00
55	16	0000000	00800880	000000000	000000EEEE	0	1	0	0	1	00	00	00
56	17	0000000	01001100	000000000	000001DDDD	0	0	0	0	0	00	00	00
57	18	0000000	02002200	000000000	000003BBBB	0	0	0	0	0	00	00	00
58	19	0000000	04004400	000000000	0000077777	0	0	0	0	0	00	00	00
59	20	0000000	08008800	000000000	00000EEEEE	0	0	0	0	0	00	00	00
60	21	0000000	10011000	000000000	00001DDDDD	0	0	0	0	0	00	00	00

Sample Data

61	22	0000000	20022000	000000000	00003BBBBB	0	0	0	0	0	00	00	00
62	23	0000000	40044000	000000000	0000777777	0	0	0	0	0	00	00	00
63	24	0000000	00088001	000000000	0000EEEEEE	0	0	0	0	0	00	00	00
64	25	0000000	00110003	000000000	0001DDDDDD	0	0	0	0	0	00	00	00
65	26	0000000	00220006	000000000	0003BBBBBB	0	0	0	0	0	00	00	00
66	27	0000000	0044000C	000000000	0007777777	0	0	0	0	0	00	00	00
67	28	0000000	00880018	000000000	000EEEEEEE	0	1	0	0	1	00	00	00
68	29	0000000	01100031	000000000	001DDDDDDC	0	0	0	0	0	00	00	00
69	30	0000000	02200062	000000000	003BBBBBB8	0	0	0	0	0	00	00	00
70	31	0000000	044000C4	000000000	0077777770	0	0	0	0	0	00	00	00
71	32	0000000	08800188	000000000	00EEEEEEE0	0	1	0	1	0	01	00	00
72	33	0000000	11000311	000000000	01DDDDDDC1	0	0	0	1	0	00	01	00
73	34	0000000	22000622	000000000	03BBBBBB83	0	0	0	1	1	11	00	01
74	35	0000000	44000C44	000000000	0777777707	0	0	0	0	1	10	11	00
75	36	0000000	08001888	000000000	0EEEEEEE0E	0	0	0	1	1	01	10	11
76	37	0000000	10003111	000000000	1DDDDDDC1D	0	0	0	1	0	01	01	10
77	38	0000000	20006222	000000000	3BBBBBB83B	0	0	0	1	0	11	01	01
78	39	0000000	4000C444	000000000	7777777077	0	0	0	0	1	01	11	01
79	40	0000000	00018888	000000000	6EEEEEE0EF	0	0	0	1	0	10	01	11
80	41	0000000	00031110	000000000	5DDDDDC1DE	0	0	0	1	1	00	10	01
81	42	0000000	00062220	000000000	3BBBBB83BC	0	0	0	1	1	01	00	10
82	43	0000000	000C4440	000000000	7777770779	0	0	0	0	1	01	01	00
83	44	0000000	00188880	000000000	6EEEEE0EF2	0	0	0	1	0	11	01	01
84	45	0000000	00311100	000000000	5DDDDC1DE5	0	0	0	1	0	10	11	01
85	46	0000000	00622200	000000000	3BBBB83BCB	0	0	0	1	1	01	10	11
86	47	0000000	00C44400	000000000	7777707797	0	1	0	0	0	01	01	10
87	48	0000000	01888801	000000000	6EEEE0EF2F	0	1	0	1	1	11	01	01
88	49	0000000	03111003	000000000	5DDDC1DE5E	0	0	0	1	0	10	11	01
89	50	0000000	06222006	000000000	3BBB83BCBC	0	0	0	1	1	01	10	11
90	51	0000000	0C44400C	000000000	7777077979	0	0	0	0	1	00	01	10
91	52	0000000	18888018	000000000	6EEE0EF2F2	0	1	0	1	0	10	00	01
92	53	0000000	31110030	000000000	5DDC1DE5E5	0	0	0	1	1	11	10	00
93	54	0000000	62220060	000000000	3BB83BCBCB	0	0	0	1	0	00	11	10
94	55	0000000	444400C1	000000000	7770779797	0	0	0	0	0	10	00	11
95	56	0000000	08880183	000000000	6EE0EF2F2F	0	1	0	1	0	00	10	00
96	57	0000000	11100307	000000000	5DC1DE5E5F	0	0	0	1	1	01	00	10
97	58	0000000	2220060E	000000000	3B83BCBCBF	0	0	0	1	0	00	01	00
98	59	0000000	44400C1C	000000000	770779797E	0	0	0	0	0	11	00	01
99	60	0000000	08801838	000000000	6E0EF2F2FC	0	1	0	0	0	01	11	00
100	61	0000000	11003070	000000000	5C1DE5E5F8	0	0	0	0	1	11	01	11
101	62	0000000	220060E0	000000000	383BCBCBF0	0	0	0	0	1	01	11	01
102	63	0000000	4400C1C0	000000000	70779797E0	0	0	0	0	1	11	01	11
103	64	0000000	08018380	000000000	60EF2F2FC1	0	0	0	1	0	10	11	01
104	65	0000000	10030701	000000000	41DE5E5F82	0	0	0	1	1	01	10	11
105	66	0000000	20060E02	000000000	03BCBCBF04	0	0	0	1	0	01	01	10
106	67	0000000	400C1C05	000000000	0779797E09	0	0	0	0	1	10	01	01
107	68	0000000	0018380A	000000000	0EF2F2FC12	0	0	0	1	1	00	10	01
108	69	0000000	00307015	000000000	1DE5E5F825	0	0	0	1	1	01	00	10
109	70	0000000	0060E02A	000000000	3BCBCBF04B	0	0	0	1	0	00	01	00
110	71	0000000	00C1C055	000000000	779797E097	0	1	0	1	0	10	00	01
111	72	0000000	018380AA	000000000	6F2F2FC12F	0	1	0	0	1	11	10	00
112	73	0000000	03070154	000000000	5E5E5F825E	0	0	0	0	1	11	11	10
113	74	0000000	060E02A8	000000000	3CBCBF04BC	0	0	0	1	0	11	11	11
114	75	0000000	0C1C0550	000000000	79797E0979	0	0	0	0	1	00	11	11
115	76	0000000	18380AA0	000000000	72F2FC12F2	0	0	0	1	1	10	00	11
116	77	0000000	30701541	000000000	65E5F825E5	0	0	0	1	1	11	10	00
117	78	0000000	60E02A82	000000000	4BCBF04BCB	0	1	0	1	1	00	11	10

Sample Data

118	79	0000000	41C05505	000000000	1797E09796	0	1	0	1	0	11	00	11
119	80	0000000	0380AA0A	000000000	2F2FC12F2C	0	1	0	0	0	01	11	00
120	81	0000000	07015415	000000000	5E5F825E59	0	0	0	0	1	11	01	11
121	82	0000000	0E02A82A	000000000	3CBF04BCB2	0	0	0	1	0	10	11	01
122	83	0000000	1C055054	000000000	797E097964	0	0	0	0	0	01	10	11
123	84	0000000	380AA0A8	000000000	72FC12F2C9	0	0	0	1	0	01	01	10
124	85	0000000	70154151	000000000	65F825E593	0	0	0	1	0	11	01	01
125	86	0000000	602A82A3	000000000	4BF04BCB26	0	0	0	1	0	10	11	01
126	87	0000000	40550546	000000000	17E097964C	0	0	0	1	1	01	10	11
127	88	0000000	00AA0A8D	000000000	2FC12F2C99	0	1	0	1	1	01	01	10
128	89	0000000	0154151A	000000000	5F825E5932	0	0	0	1	0	11	01	01
129	90	0000000	02A82A34	000000000	3F04BCB264	0	1	0	0	0	10	11	01
130	91	0000000	05505468	000000000	7E097964C9	0	0	0	0	0	01	10	11
131	92	0000000	0AA0A8D0	000000000	7C12F2C992	0	1	0	0	0	01	01	10
132	93	0000000	154151A1	000000000	7825E59324	0	0	0	0	1	10	01	01
133	94	0000000	2A82A342	000000000	704BCB2648	0	1	0	0	1	00	10	01
134	95	0000000	55054684	000000000	6097964C91	0	0	0	1	1	01	00	10
135	96	0000000	2A0A8D09	000000000	412F2C9923	0	0	0	0	1	01	01	00
136	97	0000000	54151A12	000000000	025E593246	0	0	0	0	1	10	01	01
137	98	0000000	282A3424	000000000	04BCB2648D	0	0	0	1	1	00	10	01
138	99	0000000	50546848	000000000	097964C91A	0	0	0	0	0	01	00	10
139	100	0000000	20A8D090	000000000	12F2C99235	0	1	0	1	1	00	01	00
140	101	0000000	4151A120	000000000	25E593246A	0	0	0	1	1	11	00	01
141	102	0000000	02A34240	000000000	4BCB2648D5	0	1	0	1	1	01	11	00
142	103	0000000	05468481	000000000	17964C91AB	0	0	0	1	0	10	01	11
143	104	0000000	0A8D0903	000000000	2F2C992357	0	1	0	0	1	00	10	01
144	105	0000000	151A1206	000000000	5E593246AE	0	0	0	0	0	01	00	10
145	106	0000000	2A34240C	000000000	3CB2648D5C	0	0	0	1	0	00	01	00
146	107	0000000	54684818	000000000	7964C91AB8	0	0	0	0	0	11	00	01
147	108	0000000	28D09030	000000000	72C9923571	0	1	0	1	1	01	11	00
148	109	0000000	51A12060	000000000	6593246AE2	0	1	0	1	1	10	01	11
149	110	0000000	234240C0	000000000	4B2648D5C5	0	0	0	0	0	00	10	01
150	111	0000000	46848180	000000000	164C91AB8A	0	1	0	0	1	01	00	10
151	112	0000000	0D090301	000000000	2C99235714	0	0	0	1	0	00	01	00
152	113	0000000	1A120602	000000000	593246AE28	0	0	0	0	0	11	00	01
153	114	0000000	34240C04	000000000	32648D5C51	0	0	0	0	1	10	11	00
154	115	0000000	68481809	000000000	64C91AB8A2	0	0	0	1	1	01	10	11
155	116	0000000	50903012	000000000	4992357144	0	1	0	1	1	01	01	10
156	117	0000000	21206024	000000000	13246AE288	0	0	0	0	1	10	01	01
157	118	0000000	4240C048	000000000	2648D5C511	0	0	0	0	0	00	10	01
158	119	0000000	04818090	000000000	4C91AB8A23	0	1	0	1	0	00	00	10
159	120	0000000	09030120	000000000	1923571446	0	0	0	0	0	00	00	00
160	121	0000000	12060240	000000000	3246AE288D	0	0	0	0	0	00	00	00
161	122	0000000	240C0480	000000000	648D5C511B	0	0	0	1	1	00	00	00
162	123	0000000	48180900	000000000	491AB8A237	0	0	0	0	0	00	00	00
163	124	0000000	10301200	000000000	123571446F	0	0	0	0	0	00	00	00
164	125	0000000	20602400	000000000	246AE288DF	0	0	0	0	0	00	00	00
165	126	0000000	40C04800	000000000	48D5C511BE	0	1	0	1	0	01	00	00
166	127	0000000	01809001	000000000	11AB8A237D	0	1	0	1	1	00	01	00
167	128	0000000	03012002	000000000	23571446FA	0	0	0	0	0	11	00	01
168	129	0000000	06024004	000000000	46AE288DF5	0	0	0	1	0	01	11	00
169	130	0000000	0C048008	000000000	0D5C511BEA	0	0	0	0	1	11	01	11
170	131	0000000	18090011	000000000	1AB8A237D5	0	0	0	1	0	10	11	01
171	132	0000000	30120022	000000000	3571446FAA	0	0	0	0	0	01	10	11
172	133	0000000	60240044	000000000	6AE288DF55	0	0	0	1	0	01	01	10
173	134	0000000	40480089	000000000	55C511BEAA	0	0	0	1	0	11	01	01
174	135	0000000	00900113	000000000	2B8A237D54	0	1	0	1	1	10	11	01

Sample Data

175	136	0000000	01200227	000000000	571446FAA8	0	0	0	0	0	01	10	11
176	137	0000000	0240044E	000000000	2E288DF550	0	0	0	0	1	00	01	10
177	138	0000000	0480089C	000000000	5C511BEAA0	0	1	0	0	1	11	00	01
178	139	0000000	09001138	000000000	38A237D540	0	0	0	1	0	01	11	00
179	140	0000000	12002270	000000000	71446FAA81	0	0	0	0	1	11	01	11
180	141	0000000	240044E0	000000000	6288DF5503	0	0	0	1	0	10	11	01
181	142	0000000	480089C0	000000000	4511BEAA06	0	0	0	0	0	01	10	11
182	143	0000000	10011381	000000000	0A237D540D	0	0	0	0	1	00	01	10
183	144	0000000	20022702	000000000	1446FAA81A	0	0	0	0	0	11	00	01
184	145	0000000	40044E04	000000000	288DF55035	0	0	0	1	0	01	11	00
185	146	0000000	00089C08	000000000	511BEAA06A	0	0	0	0	1	11	01	11
186	147	0000000	00113810	000000000	2237D540D5	0	0	0	0	1	01	11	01
187	148	0000000	00227021	000000000	446FAA81AA	0	0	0	0	1	11	01	11
188	149	0000000	0044E042	000000000	08DF550355	0	0	0	1	0	10	11	01
189	150	0000000	0089C085	000000000	11BEAA06AA	0	1	0	1	0	10	10	11
190	151	0000000	0113810A	000000000	237D540D54	0	0	0	0	0	10	10	10
191	152	0000000	02270215	000000000	46FAA81AA9	0	0	0	1	1	10	10	10
192	153	0000000	044E042A	000000000	0DF5503553	0	0	0	1	1	10	10	10
193	154	0000000	089C0854	000000000	1BEAA06AA7	0	1	0	1	0	01	10	10
194	155	0000000	113810A8	000000000	37D540D54E	0	0	0	1	0	01	01	10
195	156	0000000	22702150	000000000	6FAA81AA9D	0	0	0	1	0	11	01	01
196	157	0000000	44E042A0	000000000	5F5503553A	0	1	0	0	0	10	11	01
197	158	0000000	09C08540	000000000	3EAA06AA75	0	1	0	1	0	10	10	11
198	159	0000000	13810A80	000000000	7D540D54EA	0	1	0	0	1	10	10	10
199	160	0000000	27021500	000000000	7AA81AA9D5	0	0	0	1	1	10	10	10
200	161	0000000	4E042A00	000000000	75503553AB	0	0	0	0	0	10	10	10
201	162	0000000	1C085400	000000000	6AA06AA756	0	0	0	1	1	10	10	10
202	163	0000000	3810A800	000000000	5540D54EAC	0	0	0	0	0	10	10	10
203	164	0000000	70215000	000000000	2A81AA9D58	0	0	0	1	1	10	10	10
204	165	0000000	6042A001	000000000	5503553AB0	0	0	0	0	0	10	10	10
205	166	0000000	40854002	000000000	2A06AA7561	0	1	0	0	1	10	10	10
206	167	0000000	010A8004	000000000	540D54EAC3	0	0	0	0	0	10	10	10
207	168	0000000	02150009	000000000	281AA9D586	0	0	0	0	0	10	10	10
208	169	0000000	042A0012	000000000	503553AB0C	0	0	0	0	0	10	10	10
209	170	0000000	08540024	000000000	206AA75618	0	0	0	0	0	10	10	10
210	171	0000000	10A80048	000000000	40D54EAC30	0	1	0	1	0	01	10	10
211	172	0000000	21500091	000000000	01AA9D5861	0	0	0	1	0	01	01	10
212	173	0000000	42A00122	000000000	03553AB0C3	0	1	0	0	0	11	01	01
213	174	0000000	05400244	000000000	06AA756186	0	0	0	1	0	10	11	01
214	175	0000000	0A800488	000000000	0D54EAC30D	0	1	0	0	1	01	10	11
215	176	0000000	15000911	000000000	1AA9D5861A	0	0	0	1	0	01	01	10
216	177	0000000	2A001223	000000000	3553AB0C35	0	0	0	0	1	10	01	01
217	178	0000000	54002446	000000000	6AA756186A	0	0	0	1	1	00	10	01
218	179	0000000	2800488D	000000000	554EAC30D5	0	0	0	0	0	01	00	10
219	180	0000000	5000911B	000000000	2A9D5861AA	0	0	0	1	0	00	01	00
220	181	0000000	20012236	000000000	553AB0C355	0	0	0	0	0	11	00	01
221	182	0000000	4002446C	000000000	2A756186AA	0	0	0	0	1	10	11	00
222	183	0000000	000488D9	000000000	54EAC30D54	0	0	0	1	1	01	10	11
223	184	0000000	000911B2	000000000	29D5861AA8	0	0	0	1	0	01	01	10
224	185	0000000	00122364	000000000	53AB0C3550	0	0	0	1	0	11	01	01
225	186	0000000	002446C8	000000000	2756186AA0	0	0	0	0	1	01	11	01
226	187	0000000	00488D90	000000000	4EAC30D540	0	0	0	1	0	10	01	11
227	188	0000000	00911B20	000000000	1D5861AA81	0	1	0	0	1	00	10	01
228	189	0000000	01223640	000000000	3AB0C35502	0	0	0	1	1	01	00	10
229	190	0000000	02446C80	000000000	756186AA05	0	0	0	0	1	01	01	00
230	191	0000000	0488D901	000000000	6AC30D540B	0	1	0	1	1	11	01	01
231	192	0000000	0911B203	000000000	55861AA817	0	0	0	1	0	10	11	01

Sample Data

232	193	0000000	12236407	000000000	2B0C35502F	0	0	0	0	0	01	10	11
233	194	0000000	2446C80E	000000000	56186AA05F	0	0	0	0	1	00	01	10
234	195	0000000	488D901C	000000000	2C30D540BF	0	1	0	0	1	11	00	01
235	196	0000000	111B2039	000000000	5861AA817E	0	0	0	0	1	10	11	00
236	197	0000000	22364072	000000000	30C35502FD	0	0	0	1	1	01	10	11
237	198	0000000	446C80E4	000000000	6186AA05FB	0	0	0	1	0	01	01	10
238	199	0000000	08D901C8	000000000	430D540BF6	0	1	0	0	0	11	01	01
239	200	0000000	11B20391	000000000	061AA817EC	0	1	0	0	0	10	11	01

```
Z[0]  = 3D
Z[1]  = C1
Z[2]  = F0
Z[3]  = BB
Z[4]  = 58
Z[5]  = 1E
Z[6]  = 42
Z[7]  = 42
Z[8]  = 4B
Z[9]  = 8E
Z[10] = C1
Z[11] = 2A
Z[12] = 40
Z[13] = 63
Z[14] = 7A
Z[15] = 1E

================================================================================================
         Reload this pattern into the LFSRs
         Hold content of Summation Combiner regs and calculate new C[t+1] and Z values
================================================================================================
LFSR1  <= 04B583D
LFSR2  <= 208E1EC1
LFSR3  <= 063C142F0
LFSR4  <= 0F7A2A42BB
C[t+1] <= 10

================================================================================================
         Generating 125 key symbols (encryption/decryption sequence)
================================================================================================
```

240	1	04B583D	208E1EC1	063C142F0	0F7A2A42BB	0	1	0	0	0	10	11	01
241	2	096B07A	411C3D82	0C78285E1	1EF4548577	1	0	1	1	1	10	10	11
242	3	12D60F4	02387B04	18F050BC3	3DE8A90AEF	0	0	1	1	0	01	10	10
243	4	05AC1E9	0470F609	11E0A1786	7BD15215DF	0	0	0	1	0	01	01	10
244	5	0B583D2	08E1EC13	03C142F0C	77A2A42BBF	1	1	0	1	0	00	01	01
245	6	16B07A5	11C3D827	078285E18	6F4548577E	0	1	0	0	1	11	00	01
246	7	0D60F4B	2387B04F	0F050BC30	5E8A90AEFD	1	1	1	1	1	00	11	00
247	8	1AC1E97	470F609E	1E0A17860	3D15215DFA	1	0	1	0	0	11	00	11
248	9	1583D2E	0E1EC13D	1C142F0C0	7A2A42BBF4	0	0	1	0	0	01	11	00
249	10	0B07A5D	1C3D827B	18285E181	74548577E9	1	0	1	0	1	10	01	11
250	11	160F4BB	387B04F7	1050BC302	68A90AEFD2	0	0	0	1	1	00	10	01
251	12	0C1E976	70F609EE	00A178605	515215DFA5	1	1	0	0	0	00	00	10
252	13	183D2ED	61EC13DD	0142F0C0B	22A42BBF4B	1	1	0	1	1	01	00	00
253	14	107A5DA	43D827BA	0285E1817	4548577E97	0	1	0	0	0	00	01	00
254	15	00F4BB4	07B04F74	050BC302F	0A90AEFD2E	0	1	0	1	0	10	00	01
255	16	01E9769	0F609EE8	0A178605E	15215DFA5C	0	0	1	0	1	11	10	00
256	17	03D2ED3	1EC13DD0	142F0C0BD	2A42BBF4B9	0	1	0	0	0	00	11	10
257	18	07A5DA7	3D827BA0	085E1817B	548577E972	0	1	1	1	1	11	00	11

Sample Data

258	19	0F4BB4F	7B04F740	10BC302F6	290AEFD2E5	1	0	0	0	0	01	11	00
259	20	1E9769F	7609EE80	0178605ED	5215DFA5CA	1	0	0	0	0	10	01	11
260	21	1D2ED3F	6C13DD01	02F0C0BDA	242BBF4B94	1	0	0	0	1	00	10	01
261	22	1A5DA7E	5827BA03	05E1817B4	48577E9729	1	0	0	0	1	01	00	10
262	23	14BB4FC	304F7407	0BC302F69	10AEFD2E53	0	0	1	1	1	00	01	00
263	24	09769F9	609EE80E	178605ED2	215DFA5CA7	1	1	0	0	0	10	00	01
264	25	12ED3F2	413DD01C	0F0C0BDA4	42BBF4B94F	0	0	1	1	0	00	10	00
265	26	05DA7E5	027BA038	1E1817B49	0577E9729F	0	0	1	0	1	01	00	10
266	27	0BB4FCA	04F74071	1C302F693	0AEFD2E53F	1	1	1	1	1	11	01	00
267	28	1769F95	09EE80E3	18605ED27	15DFA5CA7F	0	1	1	1	0	11	11	01
268	29	0ED3F2B	13DD01C6	10C0BDA4F	2BBF4B94FE	1	1	0	1	0	10	11	11
269	30	1DA7E56	27BA038D	01817B49F	577E9729FD	1	1	0	0	0	10	10	11
270	31	1B4FCAD	4F74071B	0302F693E	2EFD2E53FB	1	0	0	1	0	01	10	10
271	32	169F95B	1EE80E37	0605ED27D	5DFA5CA7F7	0	1	0	1	1	01	01	10
272	33	0D3F2B7	3DD01C6E	0C0BDA4FB	3BF4B94FEF	1	1	1	1	1	00	01	01
273	34	1A7E56F	7BA038DC	1817B49F6	77E9729FDE	1	1	1	1	0	01	00	01
274	35	14FCADF	774071B9	102F693ED	6FD2E53FBD	0	0	0	1	0	00	01	00
275	36	09F95BE	6E80E373	005ED27DB	5FA5CA7F7B	1	1	0	1	1	10	00	01
276	37	13F2B7C	5D01C6E7	00BDA4FB6	3F4B94FEF7	0	0	0	0	0	11	10	00
277	38	07E56F9	3A038DCE	017B49F6C	7E9729FDEE	0	0	0	1	0	00	11	10
278	39	0FCADF2	74071B9C	02F693ED8	7D2E53FBDD	1	0	0	0	1	10	00	11
279	40	1F95BE5	680E3738	05ED27DB0	7A5CA7F7BA	1	0	0	0	1	11	10	00
280	41	1F2B7CA	501C6E71	0BDA4FB60	74B94FEF74	1	0	1	1	0	01	11	10
281	42	1E56F94	2038DCE2	17B49F6C0	69729FDEE8	1	0	0	0	0	10	01	11
282	43	1CADF29	4071B9C4	0F693ED80	52E53FBDD1	1	0	1	1	1	11	10	01
283	44	195BE53	00E37389	1ED27DB01	25CA7F7BA3	1	1	1	1	1	01	11	10
284	45	12B7CA6	01C6E713	1DA4FB602	4B94FEF747	0	1	1	1	0	01	01	11
285	46	056F94C	038DCE26	1B49F6C04	1729FDEE8E	0	1	1	0	1	11	01	01
286	47	0ADF299	071B9C4D	1693ED808	2E53FBDD1C	1	0	0	0	0	10	11	01
287	48	15BE532	0E37389A	0D27DB011	5CA7F7BA38	0	0	1	1	0	10	10	11
288	49	0B7CA64	1C6E7135	1A4FB6022	394FEF7471	1	0	1	0	0	01	10	10
289	50	16F94C9	38DCE26A	149F6C044	729FDEE8E2	0	1	0	1	1	01	01	10
290	51	0DF2993	71B9C4D4	093ED8089	653FBDD1C4	1	1	1	0	0	00	01	01
291	52	1BE5327	637389A9	127DB0112	4A7F7BA388	1	0	0	0	1	11	00	01
292	53	17CA64E	46E71353	04FB60224	14FEF74710	0	1	0	1	1	01	11	00
293	54	0F94C9C	0DCE26A6	09F6C0448	29FDEE8E21	1	1	1	1	1	01	01	11
294	55	1F29939	1B9C4D4D	13ED80890	53FBDD1C42	1	1	0	1	0	00	01	01
295	56	1E53272	37389A9A	07DB01121	27F7BA3884	1	0	0	1	0	10	00	01
296	57	1CA64E5	6E713534	0FB602242	4FEF747108	1	0	1	1	1	00	10	00
297	58	194C9CB	5CE26A69	1F6C04485	1FDEE8E210	1	1	1	1	0	11	00	10
298	59	1299397	39C4D4D3	1ED80890A	3FBDD1C420	0	1	1	1	0	00	11	00
299	60	053272F	7389A9A6	1DB011214	7F7BA38840	0	1	1	0	0	11	00	11
300	61	0A64E5E	6713534C	1B6022428	7EF7471081	1	0	1	1	0	00	11	00
301	62	14C9CBD	4E26A699	16C044850	7DEE8E2102	0	0	0	1	1	10	00	11
302	63	099397A	1C4D4D32	0D80890A0	7BDD1C4205	1	0	1	1	1	00	10	00
303	64	13272F4	389A9A65	1B0112141	77BA38840B	0	1	1	1	1	00	00	10
304	65	064E5E8	713534CB	160224283	6F74710817	0	0	0	0	0	00	00	00
305	66	0C9CBD1	626A6997	0C0448507	5EE8E2102E	1	0	1	1	1	01	00	00
306	67	19397A3	44D4D32E	180890A0E	3DD1C4205C	1	1	1	1	1	11	01	00
307	68	1272F46	09A9A65D	10112141D	7BA38840B8	0	1	0	1	1	10	11	01
308	69	04E5E8C	13534CBA	00224283A	7747108171	0	0	0	0	0	01	10	11
309	70	09CBD19	26A69975	004485075	6E8E2102E3	1	1	0	1	0	10	01	10
310	71	1397A32	4D4D32EB	00890A0EA	5D1C4205C7	0	0	0	0	0	00	10	01
311	72	072F465	1A9A65D7	0112141D5	3A38840B8F	0	1	0	0	1	01	00	10
312	73	0E5E8CA	3534CBAF	0224283AA	747108171F	1	0	0	0	0	00	01	00
313	74	1CBD194	6A69975E	044850755	68E2102E3E	1	0	0	1	0	10	00	01
314	75	197A329	54D32EBC	0890A0EAB	51C4205C7D	1	1	1	1	0	01	10	00

Sample Data

315	76	12F4653	29A65D79	112141D56	238840B8FA	0	1	0	1	1	01	01	10
316	77	05E8CA6	534CBAF2	024283AAD	47108171F4	0	0	0	0	1	10	01	01
317	78	0BD194D	269975E5	04850755B	0E2102E3E9	1	1	0	0	0	11	10	01
318	79	17A329A	4D32EBCB	090A0EAB6	1C4205C7D2	0	0	1	0	0	00	11	10
319	80	0F46535	1A65D797	12141D56D	38840B8FA5	1	0	0	1	0	11	00	11
320	81	1E8CA6A	34CBAF2F	04283AADA	7108171F4B	1	1	0	0	1	01	11	00
321	82	1D194D5	69975E5F	0850755B4	62102E3E97	1	1	1	0	0	01	01	11
322	83	1A329AA	532EBCBF	10A0EAB68	44205C7D2F	1	0	0	0	0	11	01	01
323	84	1465355	265D797F	0141D56D1	0840B8FA5E	0	0	0	0	1	01	11	01
324	85	08CA6AB	4CBAF2FF	0283AADA2	108171F4BC	1	1	0	1	0	01	01	11
325	86	1194D56	1975E5FF	050755B45	2102E3E979	0	0	0	0	1	10	01	01
326	87	0329AAD	32EBCBFF	0A0EAB68A	4205C7D2F3	0	1	1	0	0	11	10	01
327	88	065355A	65D797FF	141D56D14	040B8FA5E7	0	1	0	0	0	00	11	10
328	89	0CA6AB4	4BAF2FFF	083AADA28	08171F4BCF	1	1	1	0	1	11	00	11
329	90	194D569	175E5FFF	10755B450	102E3E979E	1	0	0	0	0	01	11	00
330	91	129AAD3	2EBCBFFF	00EAB68A1	205C7D2F3C	0	1	0	0	0	10	01	11
331	92	05355A6	5D797FFF	01D56D142	40B8FA5E78	0	0	0	1	1	00	10	01
332	93	0A6AB4D	3AF2FFFE	03AADA285	0171F4BCF1	1	1	0	0	0	00	00	10
333	94	14D569B	75E5FFFD	0755B450A	02E3E979E2	0	1	0	1	0	01	00	00
334	95	09AAD37	6BCBFFFA	0EAB68A15	05C7D2F3C4	1	1	1	1	1	11	01	00
335	96	1355A6E	5797FFF4	1D56D142A	0B8FA5E788	0	1	1	1	0	11	11	01
336	97	06AB4DC	2F2FFFE8	1AADA2854	171F4BCF11	0	0	1	0	0	11	11	11
337	98	0D569B8	5E5FFFD0	155B450A9	2E3E979E23	1	0	0	0	0	11	11	11
338	99	1AAD370	3CBFFFA1	0AB68A153	5C7D2F3C46	1	1	1	0	0	10	11	11
339	100	155A6E0	797FFF43	156D142A7	38FA5E788D	0	0	0	1	1	01	10	11
340	101	0AB4DC0	72FFFE87	0ADA2854E	71F4BCF11B	1	1	1	1	1	10	01	10
341	102	1569B81	65FFFD0E	15B450A9D	63E979E236	0	1	0	1	0	11	10	01
342	103	0AD3703	4BFFFA1C	0B68A153B	47D2F3C46C	1	1	1	1	1	01	11	10
343	104	15A6E07	17FFF438	16D142A76	0FA5E788D8	0	1	0	1	1	10	01	11
344	105	0B4DC0F	2FFFE870	0DA2854EC	1F4BCF11B0	1	1	1	0	1	11	10	01
345	106	169B81F	5FFFD0E1	1B450A9D8	3E979E2360	0	1	1	1	0	01	11	10
346	107	0D3703F	3FFFA1C3	168A153B0	7D2F3C46C1	1	1	0	0	1	10	01	11
347	108	1A6E07E	7FFF4386	0D142A761	7A5E788D83	1	1	1	0	1	11	10	01
348	109	14DC0FD	7FFE870C	1A2854EC2	74BCF11B07	0	1	1	1	0	01	11	10
349	110	09B81FB	7FFD0E19	1450A9D84	6979E2360E	1	1	0	0	1	10	01	11
350	111	13703F6	7FFA1C33	08A153B09	52F3C46C1C	0	1	1	1	1	11	10	01
351	112	06E07EC	7FF43867	1142A7612	25E788D838	0	1	0	1	1	00	11	10
352	113	0DC0FD8	7FE870CF	02854EC25	4BCF11B071	1	1	0	1	1	11	00	11
353	114	1B81FB1	7FD0E19E	050A9D84B	179E2360E3	1	1	0	1	0	00	11	00
354	115	1703F62	7FA1C33D	0A153B096	2F3C46C1C7	0	1	1	0	0	11	00	11
355	116	0E07EC4	7F43867B	142A7612C	5E788D838E	1	0	0	0	0	01	11	00
356	117	1C0FD88	7E870CF6	0854EC259	3CF11B071C	1	1	1	1	1	01	01	11
357	118	181FB11	7D0E19ED	10A9D84B3	79E2360E38	1	0	0	1	1	11	01	01
358	119	103F622	7A1C33DA	0153B0967	73C46C1C71	0	0	0	1	0	10	11	01
359	120	007EC45	743867B5	02A7612CE	6788D838E3	0	0	0	1	1	01	10	11
360	121	00FD88B	6870CF6B	054EC259C	4F11B071C6	0	0	0	0	1	00	01	10
361	122	01FB117	50E19ED7	0A9D84B38	1E2360E38C	0	1	1	0	0	10	00	01
362	123	03F622F	21C33DAE	153B09671	3C46C1C718	0	1	0	0	1	11	10	00
363	124	07EC45F	43867B5C	0A7612CE2	788D838E30	0	1	1	1	0	01	11	10
364	125	0FD88BF	070CF6B9	14EC259C4	711B071C61	1	0	0	0	0	10	01	11

1.3 SECOND SET OF SAMPLE DATA

```
Initial values for the key, BD_ADDR and clock

K'c2[0]   = 00   K'c2[1]   = 00    K'c2[2]   = 00    K'c2[3]  = 00
K'c2[4]   = 00   K'c2[5]   = 00    K'c2[6]   = 00    K'c2[7]  = 00
K'c2[8]   = 00   K'c2[9]   = 00    K'c2[10]  = 00    K'c2[11] = 00
K'c2[12]  = 00   K'c2[13]  = 00    K'c2[14]  = 00    K'c2[15] = 00

Addr2[0] = 00   Addr2[1] = 00    Addr2[2] = 00
Addr2[3] = 00   Addr2[4] = 00    Addr2[5] = 00

CL2[0]  = 00   CL2[1]  = 00    CL2[2]  = 00    CL2[3]  = 03


================================================================================================
         Fill LFSRs with initial data
================================================================================================

  t  clk#    LFSR1    LFSR2     LFSR3      LFSR4          X1 X2 X3 X4   Z  C[t+1] C[t] C[t-1]

  0     0    0000000* 00000000* 000000000* 0000000000*    0  0  0  0    0  00     00   00
  1     1    0000001* 00000001* 000000001* 0000000001*    0  0  0  0    0  00     00   00
  2     2    0000002* 00000002* 000000002* 0000000003*    0  0  0  0    0  00     00   00
  3     3    0000004* 00000004* 000000004* 0000000007*    0  0  0  0    0  00     00   00
  4     4    0000008* 00000008* 000000008* 000000000E*    0  0  0  0    0  00     00   00
  5     5    0000010* 00000010* 000000010* 000000001C*    0  0  0  0    0  00     00   00
  6     6    0000020* 00000020* 000000020* 0000000038*    0  0  0  0    0  00     00   00
  7     7    0000040* 00000040* 000000040* 0000000070*    0  0  0  0    0  00     00   00
  8     8    0000080* 00000080* 000000080* 00000000E0*    0  0  0  0    0  00     00   00
  9     9    0000100* 00000100* 000000100* 00000001C0*    0  0  0  0    0  00     00   00
 10    10    0000200* 00000200* 000000200* 0000000380*    0  0  0  0    0  00     00   00
 11    11    0000400* 00000400* 000000400* 0000000700*    0  0  0  0    0  00     00   00
 12    12    0000800* 00000800* 000000800* 0000000E00*    0  0  0  0    0  00     00   00
 13    13    0001000* 00001000* 000001000* 0000001C00*    0  0  0  0    0  00     00   00
 14    14    0002000* 00002000* 000002000* 0000003800*    0  0  0  0    0  00     00   00
 15    15    0004000* 00004000* 000004000* 0000007000*    0  0  0  0    0  00     00   00
 16    16    0008000* 00008000* 000008000* 000000E000*    0  0  0  0    0  00     00   00
 17    17    0010000* 00010000* 000010000* 000001C000*    0  0  0  0    0  00     00   00
 18    18    0020000* 00020000* 000020000* 0000038000*    0  0  0  0    0  00     00   00
 19    19    0040000* 00040000* 000040000* 0000070000*    0  0  0  0    0  00     00   00
 20    20    0080000* 00080000* 000080000* 00000E0000*    0  0  0  0    0  00     00   00
 21    21    0100000* 00100000* 000100000* 00001C0000*    0  0  0  0    0  00     00   00
 22    22    0200000* 00200000* 000200000* 0000380000*    0  0  0  0    0  00     00   00
 23    23    0400000* 00400000* 000400000* 0000700000*    0  0  0  0    0  00     00   00
 24    24    0800000* 00800000* 000800000* 0000E00000*    1  1  0  0    0  01     00   00
 25    25    1000000* 01000000* 001000000* 0001C00000*    0  0  0  0    0  00     00   00
 26    26    0000001  02000000* 002000000* 0003800000*    0  0  0  0    0  00     00   00
 27    27    0000002  04000000* 004000000* 0007000000*    0  0  0  0    0  00     00   00
 28    28    0000004  08000000* 008000000* 000E000000*    0  0  0  0    0  00     00   00
 29    29    0000008  10000000* 010000000* 001C000000*    0  0  0  0    0  00     00   00
 30    30    0000010  20000000* 020000000* 0038000000*    0  0  0  0    0  00     00   00
 31    31    0000020  40000000* 040000000* 0070000000*    0  0  0  0    0  00     00   00
 32    32    0000040  00000001  080000000* 00E0000000*    0  0  1  1    0  01     00   00
 33    33    0000080  00000002  100000000* 01C0000000*    0  0  0  1    1  00     00   00
 34    34    0000101  00000004  000000001  0380000000*    0  0  0  1    1  00     00   00
```

Sample Data

35	35	0000202	00000008	000000002	0700000000*	0	0	0	0	0	00	00	00
36	36	0000404	00000010	000000004	0E00000000*	0	0	0	0	0	00	00	00
37	37	0000808	00000020	000000008	1C00000000*	0	0	0	0	0	00	00	00
38	38	0001011	00000040	000000011	3800000000*	0	0	0	0	0	00	00	00
39	39	0002022	00000080	000000022	7000000000*	0	0	0	0	0	00	00	00

Start clocking Summation Combiner

40	1	0004044	00000100	000000044	6000000001	0	0	0	0	0	00	00	00
41	2	0008088	00000200	000000088	4000000003	0	0	0	0	0	00	00	00
42	3	0010111	00000400	000000111	0000000007	0	0	0	0	0	00	00	00
43	4	0020222	00000800	000000222	000000000E	0	0	0	0	0	00	00	00
44	5	0040444	00001001	000000444	000000001D	0	0	0	0	0	00	00	00
45	6	0080888	00002002	000000888	000000003B	0	0	0	0	0	00	00	00
46	7	0101111	00004004	000001111	0000000077	0	0	0	0	0	00	00	00
47	8	0202222	00008008	000002222	00000000EE	0	0	0	0	0	00	00	00
48	9	0404444	00010011	000004444	00000001DD	0	0	0	0	0	00	00	00
49	10	0808888	00020022	000008888	00000003BB	1	0	0	0	1	00	00	00
50	11	1011110	00040044	000011111	0000000777	0	0	0	0	0	00	00	00
51	12	0022221	00080088	000022222	0000000EEE	0	0	0	0	0	00	00	00
52	13	0044442	00100110	000044444	0000001DDD	0	0	0	0	0	00	00	00
53	14	0088884	00200220	000088888	0000003BBB	0	0	0	0	0	00	00	00
54	15	0111109	00400440	000111111	0000007777	0	0	0	0	0	00	00	00
55	16	0222212	00800880	000222222	000000EEEE	0	1	0	0	1	00	00	00
56	17	0444424	01001100	000444444	000001DDDD	0	0	0	0	0	00	00	00
57	18	0888848	02002200	000888888	000003BBBB	1	0	0	0	1	00	00	00
58	19	1111090	04004400	001111110	0000077777	0	0	0	0	0	00	00	00
59	20	0222120	08008800	002222220	00000EEEEE	0	0	0	0	0	00	00	00
60	21	0444240	10011000	004444440	00001DDDDD	0	0	0	0	0	00	00	00
61	22	0888480	20022000	008888880	00003BBBBB	1	0	0	0	1	00	00	00
62	23	1110900	40044000	011111100	0000777777	0	0	0	0	0	00	00	00
63	24	0221200	00088001	022222200	0000EEEEEE	0	0	0	0	0	00	00	00
64	25	0442400	00110003	044444400	0001DDDDDD	0	0	0	0	0	00	00	00
65	26	0884800	00220006	088888800	0003BBBBBB	1	0	1	0	0	01	00	00
66	27	1109000	0044000C	111111000	0007777777	0	0	0	0	1	01	01	00
67	28	0212001	00880018	022222001	000EEEEEEE	0	1	0	0	0	11	01	01
68	29	0424002	01100031	044444002	001DDDDDDC	0	0	0	0	1	01	11	01
69	30	0848004	02200062	088888004	003BBBBBB8	1	0	1	0	1	10	01	11
70	31	1090008	044000C4	111110008	0077777770	0	0	0	0	0	00	10	01
71	32	0120010	08800188	022220010	00EEEEEEE0	0	1	0	1	0	00	00	10
72	33	0240020	11000311	044440020	01DDDDDDC1	0	0	0	1	1	00	00	00
73	34	0480040	22000622	088880040	03BBBBBB83	0	0	1	1	0	01	00	00
74	35	0900081	44000C44	111100080	0777777707	1	0	0	0	0	00	01	00
75	36	1200103	08001888	022200101	0EEEEEEE0E	0	0	0	1	1	11	00	01
76	37	0400207	10003111	044400202	1DDDDDDC1D	0	0	0	1	0	01	11	00
77	38	080040E	20006222	088800404	3BBBBBB83B	1	0	1	1	0	01	01	11
78	39	100081C	4000C444	111000808	7777777077	0	0	0	0	1	10	01	01
79	40	0001038	00018888	022001010	6EEEEEE0EF	0	0	0	1	1	00	10	01
80	41	0002070	00031110	044002020	5DDDDDC1DE	0	0	0	1	1	01	00	10
81	42	00040E0	00062220	088004040	3BBBBB83BC	0	0	1	1	1	00	01	00
82	43	00081C1	000C4440	110008081	7777770779	0	0	0	0	0	11	00	01
83	44	0010383	00188880	020010103	6EEEEE0EF2	0	0	0	1	0	01	11	00
84	45	0020707	00311100	040020206	5DDDDC1DE5	0	0	0	1	0	10	01	11
85	46	0040E0E	00622200	08004040C	3BBBB83BCB	0	0	1	1	0	11	10	01
86	47	0081C1D	00C44400	100080819	7777707797	0	1	0	0	0	00	11	10
87	48	010383A	01888801	000101032	6EEEE0EF2F	0	1	0	1	0	11	00	11
88	49	0207075	03111003	000202064	5DDDC1DE5E	0	0	0	1	0	01	11	00

Sample Data

89	50	040E0EA	06222006	0004040C8	3BBB83BCBC	0	0	0	1	0	10	01	11
90	51	081C1D5	0C44400C	000808191	7777077979	1	0	0	0	1	00	10	01
91	52	10383AB	18888018	001010323	6EEE0EF2F2	0	1	0	1	0	00	00	10
92	53	0070756	31110030	002020646	5DDC1DE5E5	0	0	0	1	1	00	00	00
93	54	00E0EAC	62220060	004040C8C	3BB83BCBCB	0	0	0	1	1	00	00	00
94	55	01C1D59	444400C1	008081919	7770779797	0	0	0	0	0	00	00	00
95	56	0383AB2	08880183	010103232	6EE0EF2F2F	0	1	0	1	0	01	00	00
96	57	0707565	11100307	020206464	5DC1DE5E5F	0	0	0	1	0	00	01	00
97	58	0E0EACA	2220060E	04040C8C8	3B83BCBCBF	1	0	0	1	0	10	00	01
98	59	1C1D594	44400C1C	080819191	770779797E	1	0	1	0	0	00	10	00
99	60	183AB28	08801838	101032323	6E0EF2F2FC	1	1	0	0	0	00	00	10
100	61	1075650	11003070	002064647	5C1DE5E5F8	0	0	0	0	0	00	00	00
101	62	00EACA1	220060E0	0040C8C8E	383BCBCBF0	0	0	0	0	0	00	00	00
102	63	01D5943	4400C1C0	00819191D	70779797E0	0	0	0	0	0	00	00	00
103	64	03AB286	08018380	01032323A	60EF2F2FC1	0	0	0	1	1	00	00	00
104	65	075650C	10030701	020646475	41DE5E5F82	0	0	0	1	1	00	00	00
105	66	0EACA18	20060E02	040C8C8EA	03BCBCBF04	1	0	0	1	0	01	00	00
106	67	1D59430	400C1C05	0819191D4	0779797E09	1	0	1	0	1	00	01	00
107	68	1AB2861	0018380A	1032323A9	0EF2F2FC12	1	0	0	1	0	10	00	01
108	69	15650C3	00307015	006464752	1DE5E5F825	0	0	0	1	1	11	10	00
109	70	0ACA186	0060E02A	00C8C8EA4	3BCBCBF04B	1	0	0	1	1	00	11	10
110	71	159430C	00C1C055	019191D48	779797E097	0	1	0	1	0	11	00	11
111	72	0B28618	018380AA	032323A90	6F2F2FC12F	1	1	0	0	1	01	11	00
112	73	1650C30	03070154	064647520	5E5E5F825E	0	0	0	0	1	11	01	11
113	74	0CA1860	060E02A8	0C8C8EA40	3CBCBF04BC	1	0	1	1	0	11	11	01
114	75	19430C0	0C1C0550	19191D480	79797E0979	1	0	1	0	1	11	11	11
115	76	1286180	18380AA0	12323A900	72F2FC12F2	0	0	0	1	0	11	11	11
116	77	050C301	30701541	046475201	65E5F825E5	0	0	0	1	0	11	11	11
117	78	0A18602	60E02A82	08C8EA402	4BCBF04BCB	1	1	1	1	1	10	11	11
118	79	1430C04	41C05505	1191D4804	1797E09796	0	1	0	1	0	10	10	11
119	80	0861808	0380AA0A	0323A9008	2F2FC12F2C	1	1	0	0	0	01	10	10
120	81	10C3011	07015415	064752011	5E5F825E59	0	0	0	0	1	00	01	10
121	82	0186022	0E02A82A	0C8EA4022	3CBF04BCB2	0	0	1	1	0	10	00	01
122	83	030C045	1C055054	191D48044	797E097964	0	0	1	0	1	11	10	00
123	84	061808A	380AA0A8	123A90088	72FC12F2C9	0	0	0	1	0	00	11	10
124	85	0C30115	70154151	047520111	65F825E593	1	0	0	1	0	11	00	11
125	86	186022A	602A82A3	08EA40222	4BF04BCB26	1	0	1	1	0	00	11	00
126	87	10C0455	40550546	11D480444	17E097964C	0	0	0	1	1	10	00	11
127	88	01808AA	00AA0A8D	03A900888	2FC12F2C99	0	1	0	1	0	00	10	00
128	89	0301155	0154151A	075201111	5F825E5932	0	0	0	1	1	01	00	10
129	90	06022AA	02A82A34	0EA402222	3F04BCB264	0	1	1	0	1	00	01	00
130	91	0C04555	05505468	1D4804445	7E097964C9	1	0	1	0	0	10	00	01
131	92	1808AAA	0AA0A8D0	1A900888A	7C12F2C992	1	1	1	0	1	00	10	00
132	93	1011555	154151A1	152011115	7825E59324	0	0	0	0	0	01	00	10
133	94	0022AAB	2A82A342	0A402222B	704BCB2648	0	1	1	0	1	00	01	00
134	95	0045556	55054684	148044457	6097964C91	0	0	0	1	1	11	00	01
135	96	008AAAC	2A0A8D09	0900888AE	412F2C9923	0	0	1	0	0	01	11	00
136	97	0115559	54151A12	12011115D	025E593246	0	0	0	0	1	11	01	11
137	98	022AAB2	282A3424	0402222BA	04BCB2648D	0	0	0	1	0	10	11	01
138	99	0455564	50546848	080444575	097964C91A	0	0	1	0	1	01	10	11
139	100	08AAAC8	20A8D090	100888AEA	12F2C99235	1	1	0	1	0	10	01	10
140	101	1155591	4151A120	0011115D5	25E593246A	0	0	0	1	1	00	10	01
141	102	02AAB22	02A34240	002222BAA	4BCB2648D5	0	1	0	1	0	00	00	10
142	103	0555644	05468481	004445755	17964C91AB	0	0	0	1	1	00	00	00
143	104	0AAAC88	0A8D0903	00888AEAA	2F2C992357	1	1	0	0	0	01	00	00
144	105	1555911	151A1206	011115D55	5E593246AE	0	0	0	0	1	01	01	00
145	106	0AAB222	2A34240C	02222BAAA	3CB2648D5C	1	0	0	1	1	11	01	01

Sample Data

146	107	1556445	54684818	044457555	7964C91AB8	0	0	0	0	1	01	11	01
147	108	0AAC88B	28D09030	0888AEAAA	72C9923571	1	1	1	1	1	01	01	11
148	109	1559117	51A12060	11115D555	6593246AE2	0	1	0	1	1	11	01	01
149	110	0AB222F	234240C0	0222BAAAB	4B2648D5C5	1	0	0	0	0	10	11	01
150	111	156445F	46848180	044575557	164C91AB8A	0	1	0	0	1	01	10	11
151	112	0AC88BF	0D090301	088AEAAAE	2C99235714	1	0	1	1	0	10	01	10
152	113	159117F	1A120602	1115D555D	593246AE28	0	0	0	0	0	00	10	01
153	114	0B222FE	34240C04	022BAAABA	32648D5C51	1	0	0	0	1	01	00	10
154	115	16445FD	68481809	045755574	64C91AB8A2	0	0	0	1	0	00	01	00
155	116	0C88BFA	50903012	08AEAAAE8	4992357144	1	1	1	1	0	01	00	01
156	117	19117F5	21206024	115D555D1	13246AE288	1	0	0	0	0	00	01	00
157	118	1222FEA	4240C048	02BAAABA2	2648D5C511	0	0	0	0	0	11	00	01
158	119	0445FD5	04818090	057555744	4C91AB8A23	0	1	0	1	1	01	11	00
159	120	088BFAA	09030120	0AEAAAE88	1923571446	1	0	1	0	1	10	01	11
160	121	1117F55	12060240	15D555D11	3246AE288D	0	0	0	0	0	00	10	01
161	122	022FEAA	240C0480	0BAAABA22	648D5C511B	0	0	1	1	0	00	00	10
162	123	045FD54	48180900	175557444	491AB8A237	0	0	0	0	0	00	00	00
163	124	08BFAA9	10301200	0EAAAE889	123571446F	1	0	1	0	0	01	00	00
164	125	117F553	20602400	1D555D113	246AE288DF	0	0	1	0	0	00	01	00
165	126	02FEAA7	40C04800	1AAABA227	48D5C511BE	0	1	1	1	1	10	00	01
166	127	05FD54F	01809001	15557444F	11AB8A237D	0	1	0	1	0	00	10	00
167	128	0BFAA9F	03012002	0AAAE889E	23571446FA	1	0	1	0	0	00	00	10
168	129	17F553F	06024004	1555D113D	46AE288DF5	0	0	0	1	1	00	00	00
169	130	0FEAA7E	0C048008	0AABA227A	0D5C511BEA	1	0	1	0	0	01	00	00
170	131	1FD54FC	18090011	1557444F5	1AB8A237D5	1	0	0	1	1	00	01	00
171	132	1FAA9F9	30120022	0AAE889EB	3571446FAA	1	0	1	0	0	10	00	01
172	133	1F553F2	60240044	155D113D7	6AE288DF55	1	0	0	1	0	00	10	00
173	134	1EAA7E4	40480089	0ABA227AE	55C511BEAA	1	0	1	1	1	00	00	10
174	135	1D54FC9	00900113	157444F5D	2B8A237D54	1	1	0	1	1	01	00	00
175	136	1AA9F93	01200227	0AE889EBA	571446FAA8	1	0	1	0	1	00	01	00
176	137	1553F26	0240044E	15D113D75	2E288DF550	0	0	0	0	0	11	00	01
177	138	0AA7E4C	0480089C	0BA227AEA	5C511BEAA0	1	1	1	0	0	00	11	00
178	139	154FC98	09001138	17444F5D4	38A237D540	0	0	0	1	1	10	00	11
179	140	0A9F931	12002270	0E889EBA9	71446FAA81	1	0	1	0	0	00	10	00
180	141	153F262	240044E0	1D113D753	6288DF5503	0	0	1	1	0	00	00	10
181	142	0A7E4C5	480089C0	1A227AEA7	4511BEAA06	1	0	1	0	0	01	00	00
182	143	14FC98B	10011381	1444F5D4F	0A237D540D	0	0	0	0	1	01	01	00
183	144	09F9316	20022702	0889EBA9E	1446FAA81A	1	0	1	0	1	11	01	01
184	145	13F262D	40044E04	1113D753D	288DF55035	0	0	0	1	0	10	11	01
185	146	07E4C5A	00089C08	0227AEA7A	511BEAA06A	0	0	0	0	0	01	10	11
186	147	0FC98B4	00113810	044F5D4F5	2237D540D5	1	0	0	0	0	01	01	10
187	148	1F93169	00227021	089EBA9EB	446FAA81AA	1	0	1	0	1	11	01	01
188	149	1F262D2	0044E042	113D753D7	08DF550355	1	0	0	1	1	10	11	01
189	150	1E4C5A4	0089C085	027AEA7AE	11BEAA06AA	1	1	0	1	1	10	10	11
190	151	1C98B48	0113810A	04F5D4F5C	237D540D54	1	0	0	0	1	10	10	10
191	152	1931691	02270215	09EBA9EB8	46FAA81AA9	1	0	1	1	1	01	10	10
192	153	1262D22	044E042A	13D753D71	0DF5503553	0	0	0	1	0	01	01	10
193	154	04C5A44	089C0854	07AEA7AE2	1BEAA06AA7	0	1	0	1	1	11	01	01
194	155	098B488	113810A8	0F5D4F5C4	37D540D54E	1	0	1	1	0	11	11	01
195	156	1316910	22702150	1EBA9EB89	6FAA81AA9D	0	0	1	1	1	11	11	11
196	157	062D220	44E042A0	1D753D712	5F5503553A	0	1	1	0	1	11	11	11
197	158	0C5A440	09C08540	1AEA7AE25	3EAA06AA75	1	1	1	1	1	10	11	11
198	159	18B4880	13810A80	15D4F5C4B	7D540D54EA	1	1	0	0	0	10	10	11
199	160	1169100	27021500	0BA9EB897	7AA81AA9D5	0	0	1	1	0	01	10	10
200	161	02D2201	4E042A00	1753D712E	75503553AB	0	0	0	0	1	00	01	10
201	162	05A4403	1C085400	0EA7AE25C	6AA06AA756	0	0	1	1	0	10	00	01
202	163	0B48807	3810A800	1D4F5C4B8	5540D54EAC	1	0	1	0	0	00	10	00

Sample Data

203	164	169100F	70215000	1A9EB8971	2A81AA9D58	0	0	1	1	0	00	00	10
204	165	0D2201E	6042A001	153D712E3	5503553AB0	1	0	0	0	1	00	00	00
205	166	1A4403C	40854002	0A7AE25C6	2A06AA7561	1	1	1	0	1	01	00	00
206	167	1488079	010A8004	14F5C4B8D	540D54EAC3	0	0	0	0	1	01	01	00
207	168	09100F2	02150009	09EB8971B	281AA9D586	1	0	1	0	1	11	01	01
208	169	12201E5	042A0012	13D712E37	503553AB0C	0	0	0	0	1	01	11	01
209	170	04403CA	08540024	07AE25C6E	206AA75618	0	0	0	0	1	11	01	11
210	171	0880795	10A80048	0F5C4B8DD	40D54EAC30	1	1	1	1	1	11	11	01
211	172	1100F2A	21500091	1EB8971BA	01AA9D5861	0	0	1	1	1	11	11	11
212	173	0201E54	42A00122	1D712E374	03553AB0C3	0	1	1	0	1	11	11	11
213	174	0403CA9	05400244	1AE25C6E9	06AA756186	0	0	1	1	1	11	11	11
214	175	0807952	0A800488	15C4B8DD3	0D54EAC30D	1	1	0	0	1	11	11	11
215	176	100F2A5	15000911	0B8971BA6	1AA9D5861A	0	0	1	1	1	11	11	11
216	177	001E54A	2A001223	1712E374C	3553AB0C35	0	0	0	0	1	00	11	11
217	178	003CA94	54002446	0E25C6E98	6AA756186A	0	0	1	1	0	11	00	11
218	179	0079528	2800488D	1C4B8DD31	554EAC30D5	0	0	1	0	0	01	11	00
219	180	00F2A50	5000911B	18971BA62	2A9D5861AA	0	0	1	1	1	10	01	11
220	181	01E54A0	20012236	112E374C4	553AB0C355	0	0	0	0	0	00	10	01
221	182	03CA940	4002446C	025C6E988	2A756186AA	0	0	0	0	0	01	00	10
222	183	0795280	000488D9	04B8DD310	54EAC30D54	0	0	0	1	0	00	01	00
223	184	0F2A500	000911B2	0971BA620	29D5861AA8	1	0	1	1	1	10	00	01
224	185	1E54A00	00122364	12E374C40	53AB0C3550	1	0	0	1	0	00	10	00
225	186	1CA9400	002446C8	05C6E9880	2756186AA0	1	0	0	0	1	01	00	10
226	187	1952800	00488D90	0B8DD3101	4EAC30D540	1	0	1	1	0	11	01	00
227	188	12A5000	00911B20	171BA6202	1D5861AA81	0	1	0	0	0	10	11	01
228	189	054A000	01223640	0E374C404	3AB0C35502	0	0	1	1	0	10	10	11
229	190	0A94000	02446C80	1C6E98808	756186AA05	1	0	1	0	0	01	10	10
230	191	1528001	0488D901	18DD31011	6AC30D540B	0	1	1	1	0	10	01	10
231	192	0A50003	0911B203	11BA62023	55861AA817	1	0	0	1	0	11	10	01
232	193	14A0006	12236407	0374C4047	2B0C35502F	0	0	0	0	1	11	11	10
233	194	094000C	2446C80E	06E98808E	56186AA05F	1	0	0	0	0	11	11	11
234	195	1280018	488D901C	0DD31011D	2C30D540BF	0	1	1	0	1	11	11	11
235	196	0500030	111B2039	1BA62023A	5861AA817E	0	0	1	0	0	11	11	11
236	197	0A00060	22364072	174C40475	30C35502FD	1	0	0	1	1	11	11	11
237	198	14000C0	446C80E4	0E98808EA	6186AA05FB	0	0	1	1	1	11	11	11
238	199	0800180	08D901C8	1D31011D5	430D540BF6	1	1	1	0	0	10	11	11
239	200	1000301	11B20391	1A62023AB	061AA817EC	0	1	1	0	0	10	10	11

```
Z[0]  = 25
Z[1]  = 45
Z[2]  = 6B
Z[3]  = 55
Z[4]  = 5F
Z[5]  = C2
Z[6]  = 20
Z[7]  = E5
Z[8]  = C4
Z[9]  = F8
Z[10] = 3A
Z[11] = F1
Z[12] = FF
Z[13] = 89
Z[14] = 02
Z[15] = 35

================================================================================================
         Reload this pattern into the LFSRs
```

Sample Data

Hold content of Summation Combiner regs and calculate new C[t+1] and Z values

```
LFSR1  <= 1C45F25
LFSR2  <= 7FF8C245
LFSR3  <= 1893A206B
LFSR4  <= 1A02F1E555
C[t+1] <= 10
```

Generating 125 key symbols (encryption/decryption sequence)

240	1	1C45F25	7FF8C245	1893A206B	1A02F1E555	1	1	1	0	1	10	10	11
241	2	188BE4A	7FF1848B	1127440D7	3405E3CAAB	1	1	0	0	0	01	10	10
242	3	1117C95	7FE30917	024E881AF	680BC79557	0	1	0	0	0	01	01	10
243	4	022F92B	7FC6122F	049D1035E	50178F2AAF	0	1	0	0	0	11	01	01
244	5	045F257	7F8C245E	093A206BD	202F1E555E	0	1	1	0	1	10	11	01
245	6	08BE4AE	7F1848BC	127440D7A	405E3CAABC	1	0	0	0	1	01	10	11
246	7	117C95C	7E309178	04E881AF4	00BC795579	0	0	0	1	0	01	01	10
247	8	02F92B8	7C6122F0	09D1035E8	0178F2AAF2	0	0	1	0	0	11	01	01
248	9	05F2570	78C245E1	13A206BD0	02F1E555E5	0	1	0	1	1	10	11	01
249	10	0BE4AE1	71848BC2	07440D7A0	05E3CAABCA	1	1	0	1	1	10	10	11
250	11	17C95C3	63091784	0E881AF40	0BC7955795	0	0	1	1	0	01	10	10
251	12	0F92B87	46122F09	1D1035E80	178F2AAF2B	1	0	1	1	0	10	01	10
252	13	1F2570F	0C245E12	1A206BD01	2F1E555E56	1	0	1	0	0	11	10	01
253	14	1E4AE1F	1848BC25	1440D7A03	5E3CAABCAC	1	0	0	0	0	00	11	10
254	15	1C95C3E	3091784A	0881AF407	3C79557958	1	1	1	0	1	11	00	11
255	16	192B87D	6122F094	11035E80F	78F2AAF2B1	1	0	0	1	1	01	11	00
256	17	12570FA	4245E128	0206BD01E	71E555E562	0	0	0	1	0	10	01	11
257	18	04AE1F4	048BC250	040D7A03D	63CAABCAC5	0	1	0	1	0	11	10	01
258	19	095C3E8	091784A0	081AF407A	479557958A	1	0	1	1	0	01	11	10
259	20	12B87D1	122F0941	1035E80F4	0F2AAF2B14	0	0	0	0	1	11	01	11
260	21	0570FA3	245E1283	006BD01E9	1E555E5628	0	0	0	0	1	01	11	01
261	22	0AE1F46	48BC2506	00D7A03D2	3CAABCAC50	1	1	0	1	0	01	01	11
262	23	15C3E8C	11784A0C	01AF407A5	79557958A0	0	0	0	0	1	10	01	01
263	24	0B87D18	22F09419	035E80F4A	72AAF2B140	1	1	0	1	1	11	10	01
264	25	170FA30	45E12832	06BD01E94	6555E56280	0	1	0	0	0	00	11	10
265	26	0E1F460	0BC25065	0D7A03D28	4AABCAC501	1	1	1	1	0	00	00	11
266	27	1C3E8C0	1784A0CB	1AF407A50	1557958A03	1	1	1	0	1	01	00	00
267	28	187D181	2F094196	15E80F4A0	2AAF2B1406	1	0	0	1	1	00	01	00
268	29	10FA302	5E12832C	0BD01E941	555E56280C	0	0	1	0	1	11	00	01
269	30	01F4604	3C250658	17A03D283	2ABCAC5019	0	0	0	1	0	01	11	00
270	31	03E8C09	784A0CB0	0F407A506	557958A033	0	0	1	0	0	10	01	11
271	32	07D1812	70941960	1E80F4A0C	2AF2B14066	0	1	1	1	1	11	10	01
272	33	0FA3024	612832C1	1D01E9419	55E56280CD	1	0	1	1	0	01	11	10
273	34	1F46049	42506583	1A03D2832	2BCAC5019A	1	0	1	1	0	01	01	11
274	35	1E8C093	04A0CB07	1407A5065	57958A0335	1	1	0	1	0	00	01	01
275	36	1D18127	0941960F	080F4A0CB	2F2B14066B	1	0	1	0	0	10	00	01
276	37	1A3024F	12832C1F	101E94196	5E56280CD7	1	1	0	0	0	00	10	00
277	38	146049F	2506583E	003D2832C	3CAC5019AE	0	0	0	1	1	01	00	10
278	39	08C093E	4A0CB07D	007A50658	7958A0335D	1	0	0	0	0	00	01	00
279	40	118127C	141960FA	00F4A0CB0	72B14066BA	0	0	0	1	1	11	00	01
280	41	03024F8	2832C1F4	01E941961	656280CD74	0	0	0	0	1	10	11	00
281	42	06049F1	506583E9	03D2832C2	4AC5019AE9	0	0	0	1	1	01	10	11
282	43	0C093E2	20CB07D2	07A506585	158A0335D3	1	1	0	1	0	10	01	10
283	44	18127C5	41960FA5	0F4A0CB0B	2B14066BA7	1	1	1	0	1	11	10	01
284	45	1024F8A	032C1F4B	1E9419616	56280CD74F	0	0	1	0	0	00	11	10
285	46	0049F15	06583E97	1D2832C2C	2C5019AE9F	0	0	1	0	1	10	00	11

Sample Data

286	47	0093E2B	0CB07D2F	1A5065859	58A0335D3E	0	1	1	1	1	00	10	00
287	48	0127C56	1960FA5E	14A0CB0B2	314066BA7D	0	0	0	0	0	01	00	10
288	49	024F8AD	32C1F4BC	094196164	6280CD74FB	0	1	1	1	0	11	01	00
289	50	049F15A	6583E978	12832C2C8	45019AE9F6	0	1	0	0	0	10	11	01
290	51	093E2B5	4B07D2F0	050658591	0A0335D3ED	1	0	0	0	1	01	10	11
291	52	127C56B	160FA5E0	0A0CB0B22	14066BA7DA	0	0	1	0	0	01	01	10
292	53	04F8AD7	2C1F4BC1	141961645	280CD74FB5	0	0	0	0	1	10	01	01
293	54	09F15AF	583E9783	0832C2C8A	5019AE9F6A	1	0	1	0	0	11	10	01
294	55	13E2B5E	307D2F06	106585915	20335D3ED5	0	0	0	0	1	11	11	10
295	56	07C56BD	60FA5E0D	00CB0B22B	4066BA7DAA	0	1	0	0	0	11	11	11
296	57	0F8AD7A	41F4BC1B	019616457	00CD74FB54	1	1	0	1	0	10	11	11
297	58	1F15AF4	03E97836	032C2C8AF	019AE9F6A9	1	1	0	1	1	10	10	11
298	59	1E2B5E9	07D2F06C	06585915E	0335D3ED52	1	1	0	0	0	01	10	10
299	60	1C56BD2	0FA5E0D8	0CB0B22BC	066BA7DAA4	1	1	1	0	0	10	01	10
300	61	18AD7A5	1F4BC1B0	196164578	0CD74FB549	1	0	1	1	1	11	10	01
301	62	115AF4B	3E978361	12C2C8AF0	19AE9F6A92	0	1	0	1	1	00	11	10
302	63	02B5E96	7D2F06C2	0585915E0	335D3ED524	0	0	0	0	0	10	00	11
303	64	056BD2D	7A5E0D85	0B0B22BC1	66BA7DAA49	0	0	1	1	0	00	10	00
304	65	0AD7A5B	74BC1B0A	161645783	4D74FB5493	1	1	0	0	0	00	00	10
305	66	15AF4B6	69783615	0C2C8AF07	1AE9F6A926	0	0	1	1	0	01	00	00
306	67	0B5E96D	52F06C2B	185915E0F	35D3ED524C	1	1	1	1	1	11	01	00
307	68	16BD2DB	25E0D857	10B22BC1F	6BA7DAA499	0	1	0	1	1	10	11	01
308	69	0D7A5B7	4BC1B0AF	01645783F	574FB54933	1	1	0	0	0	10	10	11
309	70	1AF4B6F	1783615F	02C8AF07F	2E9F6A9266	1	1	0	1	1	01	10	10
310	71	15E96DF	2F06C2BF	05915E0FF	5D3ED524CC	0	0	0	0	1	00	01	10
311	72	0BD2DBF	5E0D857F	0B22BC1FE	3A7DAA4998	1	0	1	0	0	10	00	01
312	73	17A5B7F	3C1B0AFE	1645783FD	74FB549331	0	0	0	1	1	11	10	00
313	74	0F4B6FF	783615FD	0C8AF07FA	69F6A92662	1	0	1	1	0	01	11	10
314	75	1E96DFF	706C2BFB	1915E0FF5	53ED524CC4	1	0	1	1	0	01	01	11
315	76	1D2DBFE	60D857F6	122BC1FEB	27DAA49988	1	1	0	1	0	00	01	01
316	77	1A5B7FD	41B0AFEC	045783FD7	4FB5493310	1	1	0	1	1	10	00	01
317	78	14B6FFA	03615FD8	08AF07FAE	1F6A926620	0	0	1	0	1	11	10	00
318	79	096DFF4	06C2BFB1	115E0FF5D	3ED524CC40	1	1	0	1	0	01	11	10
319	80	12DBFE8	0D857F63	02BC1FEBB	7DAA499881	0	1	0	1	1	10	01	11
320	81	05B7FD0	1B0AFEC6	05783FD77	7B54933103	0	0	0	0	0	00	10	01
321	82	0B6FFA1	3615FD8C	0AF07FAEF	76A9266206	1	0	1	1	1	00	00	10
322	83	16DFF42	6C2BFB18	15E0FF5DE	6D524CC40C	0	0	0	0	0	00	00	00
323	84	0DBFE85	5857F631	0BC1FEBBD	5AA4998819	1	0	1	1	1	01	00	00
324	85	1B7FD0B	30AFEC62	1783FD77A	3549331033	1	1	0	0	1	00	01	00
325	86	16FFA16	615FD8C5	0F07FAEF5	6A92662067	0	0	1	1	0	10	00	01
326	87	0DFF42D	42BFB18B	1E0FF5DEA	5524CC40CE	1	1	1	0	1	00	10	00
327	88	1BFE85B	057F6317	1C1FEBBD5	2A4998819C	1	0	1	0	0	00	00	10
328	89	17FD0B7	0AFEC62E	183FD77AA	5493310339	0	1	1	1	1	01	00	00
329	90	0FFA16F	15FD8C5C	107FAEF55	2926620672	1	1	0	0	1	00	01	00
330	91	1FF42DF	2BFB18B9	00FF5DEAA	524CC40CE5	1	1	0	0	0	10	00	01
331	92	1FE85BF	57F63172	01FEBBD55	24998819CA	1	1	0	1	1	00	10	00
332	93	1FD0B7F	2FEC62E4	03FD77AAA	4933103394	1	1	0	0	0	00	00	10
333	94	1FA16FF	5FD8C5C9	07FAEF555	1266206728	1	1	0	0	0	01	00	00
334	95	1F42DFF	3FB18B93	0FF5DEAAA	24CC40CE51	1	1	1	1	1	11	01	00
335	96	1E85BFF	7F631727	1FEBBD554	4998819CA3	1	0	1	1	0	11	11	01
336	97	1D0B7FE	7EC62E4F	1FD77AAA9	1331033947	1	1	1	0	0	10	11	11
337	98	1A16FFC	7D8C5C9F	1FAEF5553	266206728E	1	1	1	0	1	10	10	11
338	99	142DFF9	7B18B93F	1F5DEAAA7	4CC40CE51D	0	0	1	1	0	01	10	10
339	100	085BFF3	7631727F	1EBBD554E	198819CA3B	1	0	1	1	0	10	01	10
340	101	10B7FE6	6C62E4FF	1D77AAA9C	3310339477	0	0	1	0	1	00	10	01
341	102	016FFCC	58C5C9FE	1AEF55538	66206728EE	0	1	1	0	0	00	00	10
342	103	02DFF98	318B93FC	15DEAAA70	4C40CE51DC	0	1	0	0	1	00	00	00

Sample Data

343	104	05BFF31	631727F8	0BBD554E1	18819CA3B9	0	0	1	1	0	01	00	00
344	105	0B7FE62	462E4FF1	177AAA9C2	3103394772	1	0	0	0	0	00	01	00
345	106	16FFCC5	0C5C9FE2	0EF555384	6206728EE4	0	0	1	0	1	11	00	01
346	107	0DFF98A	18B93FC4	1DEAAA709	440CE51DC9	1	1	1	0	0	00	11	00
347	108	1BFF315	31727F88	1BD554E12	0819CA3B93	1	0	1	0	0	11	00	11
348	109	17FE62A	62E4FF11	17AAA9C24	1033947726	0	1	0	0	0	01	11	00
349	110	0FFCC54	45C9FE22	0F5553849	206728EE4C	1	1	1	0	0	01	01	11
350	111	1FF98A8	0B93FC44	1EAAA7093	40CE51DC99	1	1	1	1	1	00	01	01
351	112	1FF3150	1727F889	1D554E127	019CA3B933	1	0	1	1	1	10	00	01
352	113	1FE62A0	2E4FF112	1AAA9C24F	0339477267	1	0	1	0	0	00	10	00
353	114	1FCC541	5C9FE225	15553849E	06728EE4CF	1	1	0	0	0	00	00	10
354	115	1F98A82	393FC44B	0AAA7093C	0CE51DC99F	1	0	1	1	1	01	00	00
355	116	1F31504	727F8897	1554E1279	19CA3B933E	1	0	0	1	1	00	01	00
356	117	1E62A09	64FF112F	0AA9C24F2	339477267D	1	1	1	1	0	01	00	01
357	118	1CC5412	49FE225E	1553849E4	6728EE4CFB	1	1	0	0	1	00	01	00
358	119	198A824	13FC44BC	0AA7093C9	4E51DC99F7	1	1	1	0	1	10	00	01
359	120	1315049	27F88979	154E12792	1CA3B933EE	0	1	0	1	0	00	10	00
360	121	062A093	4FF112F3	0A9C24F24	39477267DC	0	1	1	0	0	00	00	10
361	122	0C54127	1FE225E6	153849E48	728EE4CFB8	1	1	0	1	1	01	00	00
362	123	18A824E	3FC44BCD	0A7093C91	651DC99F71	1	1	1	0	0	11	01	00
363	124	115049C	7F88979A	14E127922	4A3B933EE2	0	1	0	0	0	10	11	01
364	125	02A0938	7F112F35	09C24F244	1477267DC5	0	0	1	0	1	01	10	11

1.4 THIRD SET OF SAMPLES

```
Initial values for the key, pan address and clock

K'c3[0]   = FF   K'c3[1]   = FF    K'c3[2]   = FF    K'c3[3]  = FF
K'c3[4]   = FF   K'c3[5]   = FF    K'c3[6]   = FF    K'c3[7]  = FF
K'c3[8]   = FF   K'c3[9]   = FF    K'c3[10]  = FF    K'c3[11] = FF
K'c3[12]  = FF   K'c3[13]  = FF    K'c3[14]  = FF    K'c3[15] = FF

Addr3[0] = FF   Addr3[1] = FF    Addr3[2] = FF
Addr3[3] = FF   Addr3[4] = FF    Addr3[5] = FF

CL3[0]  = FF   CL3[1]  = FF    CL3[2]  = FF    CL3[3]  = 03


=============================================================================================
         Fill LFSRs with initial data
=============================================================================================

  t  clk#    LFSR1    LFSR2     LFSR3      LFSR4          X1 X2 X3 X4   Z  C[t+1] C[t] C[t-1]

  0     0    0000000* 00000000* 000000000* 0000000000*    0  0  0  0    0  00     00   00
  1     1    0000001* 00000001* 000000001* 0000000001*    0  0  0  0    0  00     00   00
  2     2    0000003* 00000002* 000000003* 0000000003*    0  0  0  0    0  00     00   00
  3     3    0000007* 00000004* 000000007* 0000000007*    0  0  0  0    0  00     00   00
  4     4    000000F* 00000009* 00000000F* 000000000F*    0  0  0  0    0  00     00   00
  5     5    000001F* 00000013* 00000001F* 000000001F*    0  0  0  0    0  00     00   00
  6     6    000003F* 00000027* 00000003F* 000000003F*    0  0  0  0    0  00     00   00
  7     7    000007F* 0000004F* 00000007F* 000000007F*    0  0  0  0    0  00     00   00
  8     8    00000FF* 0000009F* 0000000FF* 00000000FF*    0  0  0  0    0  00     00   00
  9     9    00001FF* 0000013F* 0000001FF* 00000001FF*    0  0  0  0    0  00     00   00
 10    10    00003FF* 0000027F* 0000003FF* 00000003FF*    0  0  0  0    0  00     00   00
 11    11    00007FF* 000004FF* 0000007FF* 00000007FF*    0  0  0  0    0  00     00   00
 12    12    0000FFF* 000009FF* 000000FFF* 0000000FFF*    0  0  0  0    0  00     00   00
 13    13    0001FFF* 000013FF* 000001FFF* 0000001FFF*    0  0  0  0    0  00     00   00
 14    14    0003FFF* 000027FF* 000003FFF* 0000003FFF*    0  0  0  0    0  00     00   00
 15    15    0007FFF* 00004FFF* 000007FFF* 0000007FFF*    0  0  0  0    0  00     00   00
 16    16    000FFFF* 00009FFF* 00000FFFF* 000000FFFF*    0  0  0  0    0  00     00   00
 17    17    001FFFF* 00013FFF* 00001FFFF* 000001FFFF*    0  0  0  0    0  00     00   00
 18    18    003FFFF* 00027FFF* 00003FFFF* 000003FFFF*    0  0  0  0    0  00     00   00
 19    19    007FFFF* 0004FFFF* 00007FFFF* 000007FFFF*    0  0  0  0    0  00     00   00
 20    20    00FFFFF* 0009FFFF* 0000FFFFF* 00000FFFFF*    0  0  0  0    0  00     00   00
 21    21    01FFFFF* 0013FFFF* 0001FFFFF* 00001FFFFF*    0  0  0  0    0  00     00   00
 22    22    03FFFFF* 0027FFFF* 0003FFFFF* 00003FFFFF*    0  0  0  0    0  00     00   00
 23    23    07FFFFF* 004FFFFF* 0007FFFFF* 00007FFFFF*    0  0  0  0    0  00     00   00
 24    24    0FFFFFF* 009FFFFF* 000FFFFFF* 0000FFFFFF*    1  1  0  0    0  01     00   00
 25    25    1FFFFFF* 013FFFFF* 001FFFFFF* 0001FFFFFF*    1  0  0  0    1  00     00   00
 26    26    1FFFFFF  027FFFFF* 003FFFFFF* 0003FFFFFF*    1  0  0  0    1  00     00   00
 27    27    1FFFFFF  04FFFFFF* 007FFFFFF* 0007FFFFFF*    1  1  0  0    0  01     00   00
 28    28    1FFFFFF  09FFFFFF* 00FFFFFFF* 000FFFFFFF*    1  1  0  0    0  01     00   00
 29    29    1FFFFFF  13FFFFFF* 01FFFFFFF* 001FFFFFFF*    1  1  0  0    0  01     00   00
 30    30    1FFFFFF  27FFFFFF* 03FFFFFFF* 003FFFFFFF*    1  1  0  0    0  01     00   00
 31    31    1FFFFFF  4FFFFFFF* 07FFFFFFF* 007FFFFFFF*    1  1  0  0    0  01     00   00
 32    32    1FFFFFF  1FFFFFFF  0FFFFFFFF* 00FFFFFFFF*    1  1  1  1    0  10     00   00
 33    33    1FFFFFF  3FFFFFFE  1FFFFFFFF* 01FFFFFFFF*    1  1  1  1    0  10     00   00
 34    34    1FFFFFF  7FFFFFFC  1FFFFFFFF  03FFFFFFF*     1  1  1  1    0  10     00   00
```

Sample Data

35	35	1FFFFFF	7FFFFFF9	1FFFFFFFF	07FFFFFFF*	1	1	1	1	0	10	00	00
36	36	1FFFFFF	7FFFFFF3	1FFFFFFFF	0FFFFFFFF*	1	1	1	1	0	10	00	00
37	37	1FFFFFF	7FFFFFE7	1FFFFFFFF	1FFFFFFFF*	1	1	1	1	0	10	00	00
38	38	1FFFFFF	7FFFFFCF	1FFFFFFFF	3FFFFFFFF*	1	1	1	1	0	10	00	00
39	39	1FFFFFF	7FFFFF9F	1FFFFFFFF	7FFFFFFFF*	1	1	1	1	0	10	00	00

Start clocking Summation Combiner

40	1	1FFFFFF	7FFFF3F	1FFFFFFFF	7FFFFFFFF	1	1	1	1	0	01	10	00
41	2	1FFFFFF	7FFFE7F	1FFFFFFFF	7FFFFFFFF	1	1	1	1	1	10	01	10
42	3	1FFFFFF	7FFFCFF	1FFFFFFFF	7FFFFFFFF	1	1	1	1	0	10	10	01
43	4	1FFFFFF	7FFF9FF	1FFFFFFFF	7FFFFFFFF	1	1	1	1	0	00	10	10
44	5	1FFFFFF	7FFF3FF	1FFFFFFFF	7FFFFFFFF	1	1	1	1	0	11	00	10
45	6	1FFFFFF	7FFE7FE	1FFFFFFFF	7FFFFFFFF	1	1	1	1	1	00	11	00
46	7	1FFFFFF	7FFCFFC	1FFFFFFFF	7FFFFFFFF	1	1	1	1	0	00	00	11
47	8	1FFFFFF	7FF9FF9	1FFFFFFFF	7FFFFFFFF	1	1	1	1	0	10	00	00
48	9	1FFFFFF	7FF3FF3	1FFFFFFFF	7FFFFFFFF	1	1	1	1	0	01	10	00
49	10	1FFFFFF	7FE7FE6	1FFFFFFFF	7FFFFFFFF	1	1	1	1	1	10	01	10
50	11	1FFFFFE	7FFCFFCC	1FFFFFFFE	7FFFFFFFF	1	1	1	1	0	10	10	01
51	12	1FFFFFC	7FF9FF99	1FFFFFFFC	7FFFFFFFF	1	1	1	1	0	00	10	10
52	13	1FFFFF8	7FF3FF33	1FFFFFFF8	7FFFFFFFF	1	1	1	1	0	11	00	10
53	14	1FFFFF0	7FE7FE67	1FFFFFFF0	7FFFFFFFF	1	1	1	1	1	00	11	00
54	15	1FFFFE0	7FCFFCCF	1FFFFFFE1	7FFFFFFFF	1	1	1	1	0	00	00	11
55	16	1FFFFC0	7F9FF99F	1FFFFFFC3	7FFFFFFFF	1	1	1	1	0	10	00	00
56	17	1FFFF80	7F3FF33E	1FFFFFF87	7FFFFFFFE	1	0	1	1	1	00	10	00
57	18	1FFFF00	7E7FE67C	1FFFFFF0F	7FFFFFFFC	1	0	1	1	1	00	00	10
58	19	1FFFE01	7CFFCCF8	1FFFFFE1E	7FFFFFFF8	1	1	1	1	0	10	00	00
59	20	1FFFC03	79FF99F0	1FFFFFC3C	7FFFFFFF0	1	1	1	1	0	01	10	00
60	21	1FFF807	73FF33E0	1FFFFF878	7FFFFFFE1	1	1	1	1	1	10	01	10
61	22	1FFF00F	67FE67C0	1FFFFF0F0	7FFFFFFC3	1	1	1	1	0	10	10	01
62	23	1FFE01E	4FFCCF80	1FFFFE1E1	7FFFFFF87	1	1	1	1	0	00	10	10
63	24	1FFC03C	1FF99F00	1FFFFC3C3	7FFFFFF0F	1	1	1	1	0	11	00	10
64	25	1FF8078	3FF33E01	1FFFF8787	7FFFFFE1E	1	1	1	1	1	00	11	00
65	26	1FF00F0	7FE67C02	1FFFF0F0F	7FFFFFC3C	1	1	1	1	0	00	00	11
66	27	1FE01E1	7FCCF805	1FFFE1E1E	7FFFFF878	1	1	1	1	0	10	00	00
67	28	1FC03C3	7F99F00A	1FFFC3C3C	7FFFFF0F0	1	1	1	1	0	01	10	00
68	29	1F80787	7F33E015	1FFF87878	7FFFFE1E1	1	0	1	1	0	10	01	10
69	30	1F00F0F	7E67C02A	1FFF0F0F0	7FFFFC3C3	1	0	1	1	1	11	10	01
70	31	1E01E1E	7CCF8054	1FFE1E1E1	7FFFF8787	1	1	1	1	1	01	11	10
71	32	1C03C3C	799F00A9	1FFC3C3C3	7FFFF0F0F	1	1	1	1	1	01	01	11
72	33	1807878	733E0152	1FF878787	7FFFE1E1E	1	0	1	1	0	00	01	01
73	34	100F0F0	667C02A5	1FF0F0F0F	7FFFC3C3C	0	0	1	1	0	10	00	01
74	35	001E1E0	4CF8054B	1FE1E1E1F	7FFF87878	0	1	1	1	1	00	10	00
75	36	003C3C1	19F00A96	1FC3C3C3F	7FFF0F0F0	0	1	1	1	1	00	00	10
76	37	0078783	33E0152C	1F878787F	7FFE1E1E1	0	1	1	1	1	01	00	00
77	38	00F0F07	67C02A59	1F0F0F0FF	7FFC3C3C3	0	1	1	1	0	11	01	00
78	39	01E1E0E	4F8054B3	1E1E1E1FF	7FFF878787	0	1	1	1	0	11	11	01
79	40	03C3C1C	1F00A966	1C3C3C3FF	7FFF0F0F0F	0	0	1	1	1	11	11	11
80	41	0787838	3E0152CC	1878787FF	7FFE1E1E1E	0	0	1	1	1	11	11	11
81	42	0F0F070	7C02A598	10F0F0FFF	7FFC3C3C3C	1	0	0	1	1	11	11	11
82	43	1E1E0E0	78054B30	01E1E1FFF	7FF8787878	1	0	0	1	1	11	11	11
83	44	1C3C1C0	700A9660	03C3C3FFE	7FF0F0F0F0	1	0	0	1	1	11	11	11
84	45	1878380	60152CC0	078787FFC	7FE1E1E1E0	1	0	0	1	1	11	11	11
85	46	10F0700	402A5980	0F0F0FFF8	7FC3C3C3C0	0	0	1	1	1	11	11	11
86	47	01E0E00	0054B300	1E1E1FFF0	7F87878780	0	0	1	1	1	11	11	11
87	48	03C1C00	00A96601	1C3C3FFE0	7F0F0F0F00	0	1	1	0	1	11	11	11
88	49	0783800	0152CC03	18787FFC0	7E1E1E1E01	0	0	1	0	0	11	11	11

Sample Data

89	50	0F07000	02A59806	10F0FFF80	7C3C3C3C03	1	1	0	0	1	11	11	11
90	51	1E0E000	054B300D	01E1FFF00	7878787807	1	0	0	0	0	11	11	11
91	52	1C1C001	0A96601A	03C3FFE01	70F0F0F00F	1	1	0	1	0	10	11	11
92	53	1838003	152CC035	0787FFC03	61E1E1E01E	1	0	0	1	0	10	10	11
93	54	1070007	2A59806B	0F0FFF807	43C3C3C03C	0	0	1	1	0	01	10	10
94	55	00E000F	54B300D7	1E1FFF00F	0787878078	0	1	1	1	0	10	01	10
95	56	01C001F	296601AE	1C3FFE01F	0F0F0F00F1	0	0	1	0	1	00	10	01
96	57	038003F	52CC035C	187FFC03F	1E1E1E01E2	0	1	1	0	0	00	00	10
97	58	070007F	259806B8	10FFF807F	3C3C3C03C4	0	1	0	0	1	00	00	00
98	59	0E000FE	4B300D71	01FFF00FE	7878780788	1	0	0	0	1	00	00	00
99	60	1C001FD	16601AE2	03FFE01FD	70F0F00F10	1	0	0	1	0	01	00	00
100	61	18003FA	2CC035C5	07FFC03FB	61E1E01E21	1	1	0	1	0	11	01	00
101	62	10007F4	59806B8B	0FFF807F7	43C3C03C43	0	1	1	1	0	11	11	01
102	63	0000FE8	3300D717	1FFF00FEE	0787807887	0	0	1	1	1	11	11	11
103	64	0001FD0	6601AE2F	1FFE01FDC	0F0F00F10E	0	0	1	0	0	11	11	11
104	65	0003FA0	4C035C5F	1FFC03FB8	1E1E01E21D	0	0	1	0	0	11	11	11
105	66	0007F40	1806B8BE	1FF807F70	3C3C03C43B	0	0	1	0	0	11	11	11
106	67	000FE81	300D717C	1FF00FEE1	7878078877	0	0	1	0	0	11	11	11
107	68	001FD02	601AE2F8	1FE01FDC2	70F00F10EF	0	0	1	1	1	11	11	11
108	69	003FA05	4035C5F0	1FC03FB84	61E01E21DE	0	0	1	1	1	11	11	11
109	70	007F40B	006B8BE0	1F807F708	43C03C43BC	0	0	1	1	1	11	11	11
110	71	00FE816	00D717C0	1F00FEE11	0780788778	0	1	1	1	0	10	11	11
111	72	01FD02C	01AE2F81	1E01FDC23	0F00F10EF1	0	1	1	0	0	10	10	11
112	73	03FA059	035C5F02	1C03FB847	1E01E21DE3	0	0	1	0	1	10	10	10
113	74	07F40B3	06B8BE05	1807F708F	3C03C43BC7	0	1	1	0	0	01	10	10
114	75	0FE8166	0D717C0B	100FEE11E	780788778F	1	0	0	0	0	01	01	10
115	76	1FD02CD	1AE2F817	001FDC23D	700F10EF1F	1	1	0	0	1	11	01	01
116	77	1FA059B	35C5F02F	003FB847A	601E21DE3F	1	1	0	0	1	10	11	01
117	78	1F40B37	6B8BE05E	007F708F4	403C43BC7F	1	1	0	0	0	10	10	11
118	79	1E8166E	5717C0BD	00FEE11E9	00788778FF	1	0	0	0	1	10	10	10
119	80	1D02CDC	2E2F817A	01FDC23D3	00F10EF1FE	1	0	0	1	0	01	10	10
120	81	1A059B9	5C5F02F5	03FB847A6	01E21DE3FD	1	0	0	1	1	01	01	10
121	82	140B373	38BE05EB	07F708F4C	03C43BC7FB	0	1	0	1	1	11	01	01
122	83	08166E7	717C0BD7	0FEE11E98	0788778FF7	1	0	1	1	0	11	11	01
123	84	102CDCF	62F817AE	1FDC23D31	0F10EF1FEF	0	1	1	0	1	11	11	11
124	85	0059B9F	45F02F5C	1FB847A63	1E21DE3FDE	0	1	1	0	1	11	11	11
125	86	00B373E	0BE05EB9	1F708F4C7	3C43BC7FBC	0	1	1	0	1	11	11	11
126	87	0166E7D	17C0BD72	1EE11E98F	788778FF78	0	1	1	1	0	10	11	11
127	88	02CDCFB	2F817AE5	1DC23D31F	710EF1FEF1	0	1	1	0	0	10	10	11
128	89	059B9F7	5F02F5CA	1B847A63F	621DE3FDE2	0	0	1	0	1	10	10	10
129	90	0B373EF	3E05EB94	1708F4C7F	443BC7FBC4	1	0	0	0	1	10	10	10
130	91	166E7DF	7C0BD728	0E11E98FF	08778FF788	0	0	1	0	1	10	10	10
131	92	0CDCFBE	7817AE50	1C23D31FF	10EF1FEF10	1	0	1	1	1	01	10	10
132	93	19B9F7D	702F5CA1	1847A63FE	21DE3FDE21	1	0	1	1	0	10	01	10
133	94	1373EFB	605EB942	108F4C7FC	43BC7FBC43	0	0	0	1	1	00	10	01
134	95	06E7DF7	40BD7285	011E98FF8	0778FF7886	0	1	0	0	1	01	00	10
135	96	0DCFBEF	017AE50A	023D31FF0	0EF1FEF10D	1	0	0	1	1	00	01	00
136	97	1B9F7DF	02F5CA15	047A63FE1	1DE3FDE21A	1	1	0	1	1	10	00	01
137	98	173EFBF	05EB942B	08F4C7FC3	3BC7FBC434	0	1	1	1	1	00	10	00
138	99	0E7DF7F	0BD72856	11E98FF87	778FF78869	1	1	0	1	1	00	00	10
139	100	1CFBEFF	17AE50AC	03D31FF0F	6F1FEF10D3	1	1	0	0	0	01	00	00
140	101	19F7DFE	2F5CA159	07A63FE1E	5E3FDE21A7	1	0	0	0	0	00	01	00
141	102	13EFBFC	5EB942B3	0F4C7FC3C	3C7FBC434F	0	1	1	0	0	10	00	01
142	103	07DF7F8	3D728566	1E98FF878	78FF78869F	0	0	1	1	0	00	10	00
143	104	0FBEFF0	7AE50ACD	1D31FF0F0	71FEF10D3E	1	1	1	1	0	11	00	10
144	105	1F7DFE1	75CA159B	1A63FE1E1	63FDE21A7D	1	1	1	1	1	00	11	00
145	106	1EFBFC3	6B942B36	14C7FC3C3	47FBC434FB	1	1	0	1	1	11	00	11

Sample Data

146	107	1DF7F86	5728566D	098FF8786	0FF78869F7	1	0	1	1	0	00	11	00
147	108	1BEFF0C	2E50ACDB	131FF0F0C	1FEF10D3EF	1	0	0	1	0	11	00	11
148	109	17DFE19	5CA159B6	063FE1E19	3FDE21A7DF	0	1	0	1	1	01	11	00
149	110	0FBFC33	3942B36D	0C7FC3C32	7FBC434FBF	1	0	1	1	0	01	01	11
150	111	1F7F866	728566DB	18FF87865	7F78869F7E	1	1	1	0	0	00	01	01
151	112	1EFF0CC	650ACDB6	11FF0F0CB	7EF10D3EFC	1	0	0	1	0	10	00	01
152	113	1DFE199	4A159B6D	03FE1E196	7DE21A7DF9	1	0	0	1	0	00	10	00
153	114	1BFC333	142B36DB	07FC3C32C	7BC434FBF3	1	0	0	1	0	00	00	10
154	115	17F8666	28566DB6	0FF878659	778869F7E6	0	0	1	1	0	01	00	00
155	116	0FF0CCC	50ACDB6D	1FF0F0CB3	6F10D3EFCC	1	1	1	0	0	11	01	00
156	117	1FE1999	2159B6DA	1FE1E1966	5E21A7DF99	1	0	1	0	1	10	11	01
157	118	1FC3332	42B36DB5	1FC3C32CC	3C434FBF33	1	1	1	0	1	10	10	11
158	119	1F86664	0566DB6B	1F8786599	78869F7E67	1	0	1	1	1	01	10	10
159	120	1F0CCC8	0ACDB6D6	1F0F0CB33	710D3EFCCE	1	1	1	0	0	10	01	10
160	121	1E19991	159B6DAC	1E1E19666	621A7DF99D	1	1	1	0	1	11	10	01
161	122	1C33323	2B36DB58	1C3C32CCC	4434FBF33B	1	0	1	0	1	00	11	10
162	123	1866647	566DB6B0	187865999	0869F7E676	1	0	1	0	0	11	00	11
163	124	10CCC8F	2CDB6D60	10F0CB333	10D3EFCCEC	0	1	0	1	1	01	11	00
164	125	019991E	59B6DAC0	01E196666	21A7DF99D9	0	1	0	1	1	10	01	11
165	126	033323C	336DB580	03C32CCCD	434FBF33B3	0	0	0	0	0	00	10	01
166	127	0666478	66DB6B01	07865999A	069F7E6766	0	1	0	1	0	00	00	10
167	128	0CCC8F0	4DB6D603	0F0CB3334	0D3EFCCECD	1	1	1	0	1	01	00	00
168	129	19991E1	1B6DAC07	1E1966669	1A7DF99D9B	1	0	1	0	1	00	01	00
169	130	13323C3	36DB580E	1C32CCCD3	34FBF33B37	0	1	1	1	1	10	00	01
170	131	0664786	6DB6B01C	1865999A7	69F7E6766F	0	1	1	1	1	00	10	00
171	132	0CC8F0D	5B6D6039	10CB3334F	53EFCCECDF	1	0	0	1	0	00	00	10
172	133	1991E1A	36DAC073	01966669E	27DF99D9BF	1	1	0	1	1	01	00	00
173	134	1323C35	6DB580E6	032CCCD3C	4FBF33B37E	0	1	0	1	1	00	01	00
174	135	064786A	5B6B01CD	065999A78	1F7E6766FC	0	0	0	0	0	11	00	01
175	136	0C8F0D5	36D6039B	0CB3334F0	3EFCCECDF9	1	1	1	1	1	00	11	00
176	137	191E1AA	6DAC0737	1966669E1	7DF99D9BF3	1	1	1	1	0	00	00	11
177	138	123C354	5B580E6E	12CCCD3C3	7BF33B37E7	0	0	0	1	1	00	00	00
178	139	04786A9	36B01CDC	05999A787	77E6766FCE	0	1	0	1	0	01	00	00
179	140	08F0D53	6D6039B8	0B3334F0E	6FCCECDF9C	1	0	1	1	0	11	01	00
180	141	11E1AA6	5AC07370	166669E1D	5F99D9BF38	0	1	0	1	1	10	11	01
181	142	03C354C	3580E6E0	0CCCD3C3A	3F33B37E70	0	1	1	0	0	10	10	11
182	143	0786A99	6B01CDC0	1999A7875	7E6766FCE1	0	0	1	0	1	10	10	10
183	144	0F0D533	56039B81	13334F0EB	7CCECDF9C2	1	0	0	1	0	01	10	10
184	145	1E1AA66	2C073703	06669E1D6	799D9BF385	1	0	0	1	1	01	01	10
185	146	1C354CC	580E6E06	0CCD3C3AC	733B37E70B	1	0	1	0	1	11	01	01
186	147	186A998	301CDC0C	199A78759	66766FCE17	1	0	1	0	1	10	11	01
187	148	10D5331	6039B818	1334F0EB2	4CECDF9C2F	0	0	0	1	1	01	10	11
188	149	01AA662	40737031	0669E1D65	19D9BF385E	0	0	0	1	0	01	01	10
189	150	0354CC5	00E6E063	0CD3C3ACB	33B37E70BD	0	1	1	1	0	00	01	01
190	151	06A998A	01CDC0C6	19A787596	6766FCE17B	0	1	1	0	0	10	00	01
191	152	0D53315	039B818C	134F0EB2C	4ECDF9C2F6	1	1	0	1	1	00	10	00
192	153	1AA662A	07370318	069E1D659	1D9BF385ED	1	0	0	1	0	00	00	10
193	154	154CC54	0E6E0630	0D3C3ACB3	3B37E70BDB	0	0	1	0	1	00	00	00
194	155	0A998A8	1CDC0C60	1A7875967	766FCE17B6	1	1	1	0	1	01	00	00
195	156	1533151	39B818C0	14F0EB2CE	6CDF9C2F6C	0	1	0	1	1	00	01	00
196	157	0A662A3	73703180	09E1D659D	59BF385ED8	1	0	1	1	1	10	00	01
197	158	14CC547	66E06301	13C3ACB3A	337E70BDB0	0	1	0	0	1	11	10	00
198	159	0998A8E	4DC0C602	078759675	66FCE17B61	1	1	0	1	0	01	11	10
199	160	133151D	1B818C05	0F0EB2CEB	4DF9C2F6C2	0	1	1	1	0	01	01	11
200	161	0662A3B	3703180B	1E1D659D6	1BF385ED85	0	0	1	1	1	11	01	01
201	162	0CC5477	6E063017	1C3ACB3AC	37E70BDB0B	1	0	1	1	0	11	11	01
202	163	198A8EF	5C0C602F	187596759	6FCE17B617	1	0	1	1	0	10	11	11

Sample Data

203	164	13151DE	3818C05F	10EB2CEB2	5F9C2F6C2F	0	0	0	1	1	01	10	11
204	165	062A3BC	703180BF	01D659D65	3F385ED85E	0	0	0	0	1	00	01	10
205	166	0C54779	6063017E	03ACB3ACB	7E70BDB0BD	1	0	0	0	1	11	00	01
206	167	18A8EF2	40C602FD	075967597	7CE17B617B	1	1	0	1	0	00	11	00
207	168	1151DE4	018C05FA	0EB2CEB2F	79C2F6C2F7	0	1	1	1	1	11	00	11
208	169	02A3BC9	03180BF5	1D659D65E	7385ED85EE	0	0	1	1	1	01	11	00
209	170	0547793	063017EB	1ACB3ACBC	670BDB0BDC	0	0	1	0	0	10	01	11
210	171	0A8EF27	0C602FD6	159675978	4E17B617B9	1	0	0	0	1	00	10	01
211	172	151DE4E	18C05FAD	0B2CEB2F1	1C2F6C2F73	0	1	1	0	0	00	00	10
212	173	0A3BC9C	3180BF5A	1659D65E3	385ED85EE6	1	1	0	0	0	01	00	00
213	174	1477938	63017EB5	0CB3ACBC6	70BDB0BDCC	0	0	1	1	1	00	01	00
214	175	08EF270	4602FD6A	19675978D	617B617B99	1	0	1	0	0	10	00	01
215	176	11DE4E1	0C05FAD5	12CEB2F1A	42F6C2F733	0	0	0	1	1	11	10	00
216	177	03BC9C3	180BF5AA	059D65E34	05ED85EE67	0	0	0	1	0	00	11	10
217	178	0779387	3017EB55	0B3ACBC68	0BDB0BDCCF	0	0	1	1	0	11	00	11
218	179	0EF270F	602FD6AA	1675978D0	17B617B99F	1	0	0	1	1	01	11	00
219	180	1DE4E1F	405FAD54	0CEB2F1A1	2F6C2F733F	1	0	1	0	1	10	01	11
220	181	1BC9C3F	00BF5AA9	19D65E342	5ED85EE67F	1	1	1	1	0	10	10	01
221	182	179387F	017EB552	13ACBC684	3DB0BDCCFE	0	0	0	1	1	10	10	10
222	183	0F270FF	02FD6AA5	075978D09	7B617B99FC	1	1	0	0	0	01	10	10
223	184	1E4E1FF	05FAD54A	0EB2F1A12	76C2F733F9	1	1	1	1	1	10	01	10
224	185	1C9C3FE	0BF5AA94	1D65E3425	6D85EE67F2	1	1	1	1	0	10	10	01
225	186	19387FD	17EB5529	1ACBC684B	5B0BDCCFE4	1	1	1	0	1	01	10	10
226	187	1270FFA	2FD6AA53	15978D096	3617B99FC9	0	1	0	0	0	01	01	10
227	188	04E1FF5	5FAD54A7	0B2F1A12C	6C2F733F93	0	1	1	0	1	11	01	01
228	189	09C3FEB	3F5AA94E	165E34258	585EE67F27	1	0	0	0	0	10	11	01
229	190	1387FD7	7EB5529C	0CBC684B1	30BDCCFE4F	0	1	1	1	1	10	10	11
230	191	070FFAE	7D6AA538	1978D0962	617B99FC9E	0	0	1	0	1	10	10	10
231	192	0E1FF5C	7AD54A70	12F1A12C4	42F733F93D	1	1	0	1	1	01	10	10
232	193	1C3FEB9	75AA94E1	05E342588	05EE67F27A	1	1	0	1	0	10	01	10
233	194	187FD73	6B5529C3	0BC684B10	0BDCCFE4F4	1	0	1	1	1	11	10	01
234	195	10FFAE6	56AA5386	178D09621	17B99FC9E8	0	1	0	1	1	00	11	10
235	196	01FF5CC	2D54A70C	0F1A12C43	2F733F93D0	0	0	1	0	1	10	00	11
236	197	03FEB98	5AA94E19	1E3425887	5EE67F27A1	0	1	1	1	1	00	10	00
237	198	07FD731	35529C33	1C684B10F	3DCCFE4F42	0	0	1	1	0	00	00	10
238	199	0FFAE63	6AA53866	18D09621F	7B99FC9E84	1	1	1	1	0	10	00	00
239	200	1FF5CC6	554A70CD	11A12C43F	7733F93D09	1	0	0	0	1	11	10	00

```
Z[0]  = 59
Z[1]  = 3B
Z[2]  = EF
Z[3]  = 07
Z[4]  = 13
Z[5]  = 70
Z[6]  = 9B
Z[7]  = B7
Z[8]  = 52
Z[9]  = 8F
Z[10] = 3E
Z[11] = B9
Z[12] = A5
Z[13] = AC
Z[14] = EA
Z[15] = 9E
```

Sample Data

```
================================================================================================
         Reload this pattern into the LFSRs
         Hold content of Summation Combiner regs and calculate new C[t+1] and Z values
================================================================================================
LFSR1  <= 1521359
LFSR2  <= 528F703B
LFSR3  <= 0AC3E9BEF
LFSR4  <= 4FEAB9B707
C[t+1] <= 00

================================================================================================
         Generating 125 key symbols (encryption/decryption sequence)
================================================================================================
240     1    1521359  528F703B  0AC3E9BEF  4FEAB9B707      0  1  1  1    1  00     10   00
241     2    0A426B3  251EE076  1587D37DE  1FD5736E0F      1  0  0  1    0  00     00   10
242     3    1484D67  4A3DC0ED  0B0FA6FBD  3FAAE6DC1E      0  0  1  1    0  01     00   00
243     4    0909ACF  147B81DA  161F4DF7A  7F55CDB83D      1  0  0  0    0  00     01   00
244     5    121359E  28F703B5  0C3E9BEF5  7EAB9B707B      0  1  1  1    1  10     00   01
245     6    0426B3C  51EE076B  187D37DEB  7D5736E0F6      0  1  1  0    0  00     10   00
246     7    084D679  23DC0ED6  10FA6FBD7  7AAE6DC1EC      1  1  0  1    1  00     00   10
247     8    109ACF2  47B81DAC  01F4DF7AF  755CDB83D8      0  1  0  0    1  00     00   00
248     9    01359E4  0F703B59  03E9BEF5E  6AB9B707B1      0  0  0  1    1  00     00   00
249    10    026B3C8  1EE076B3  07D37DEBD  55736E0F63      0  1  0  0    1  00     00   00
250    11    04D6791  3DC0ED67  0FA6FBD7A  2AE6DC1EC7      0  1  1  1    1  01     00   00
251    12    09ACF22  7B81DACF  1F4DF7AF4  55CDB83D8F      1  1  1  1    1  11     01   00
252    13    1359E44  7703B59E  1E9BEF5E8  2B9B707B1F      0  0  1  1    1  10     11   01
253    14    06B3C88  6E076B3C  1D37DEBD0  5736E0F63F      0  0  1  0    1  01     10   11
254    15    0D67911  5C0ED678  1A6FBD7A1  2E6DC1EC7E      1  0  1  0    1  01     01   10
255    16    1ACF223  381DACF0  14DF7AF42  5CDB83D8FD      1  0  0  1    1  11     01   01
256    17    159E446  703B59E0  09BEF5E85  39B707B1FA      0  0  1  1    1  10     11   01
257    18    0B3C88C  6076B3C0  137DEBD0A  736E0F63F4      1  0  0  0    1  01     10   11
258    19    1679118  40ED6780  06FBD7A15  66DC1EC7E8      0  1  0  1    1  01     01   10
259    20    0CF2231  01DACF00  0DF7AF42A  4DB83D8FD1      1  1  1  1    1  00     01   01
260    21    19E4463  03B59E01  1BEF5E854  1B707B1FA3      1  1  1  0    1  10     00   01
261    22    13C88C6  076B3C03  17DEBD0A9  36E0F63F47      0  0  0  1    1  11     10   00
262    23    079118C  0ED67807  0FBD7A152  6DC1EC7E8E      0  1  1  1    0  01     11   10
263    24    0F22318  1DACF00E  1F7AF42A4  5B83D8FD1D      1  1  1  1    1  01     01   11
264    25    1E44630  3B59E01C  1EF5E8548  3707B1FA3B      1  0  1  0    1  11     01   01
265    26    1C88C61  76B3C039  1DEBD0A91  6E0F63F477      1  1  1  0    0  11     11   01
266    27    19118C3  6D678073  1BD7A1523  5C1EC7E8EF      1  0  1  0    1  11     11   11
267    28    1223187  5ACF00E6  17AF42A46  383D8FD1DE      0  1  0  0    0  11     11   11
268    29    044630E  359E01CC  0F5E8548D  707B1FA3BD      0  1  1  0    1  11     11   11
269    30    088C61C  6B3C0399  1EBD0A91A  60F63F477B      1  0  1  1    0  10     11   11
270    31    1118C39  56780733  1D7A15234  41EC7E8EF6      0  0  1  1    0  10     10   11
271    32    0231872  2CF00E67  1AF42A468  03D8FD1DEC      0  1  1  1    1  01     10   10
272    33    04630E5  59E01CCE  15E8548D1  07B1FA3BD8      0  1  0  1    1  01     01   10
273    34    08C61CB  33C0399D  0BD0A91A3  0F63F477B1      1  1  1  0    0  00     01   01
274    35    118C396  6780733A  17A152347  1EC7E8EF63      0  1  0  1    0  10     00   01
275    36    031872D  4F00E674  0F42A468E  3D8FD1DEC7      0  0  1  1    0  00     10   00
276    37    0630E5A  1E01CCE8  1E8548D1D  7B1FA3BD8E      0  0  1  0    1  01     00   10
277    38    0C61CB5  3C0399D0  1D0A91A3B  763F477B1C      1  0  1  0    1  00     01   00
278    39    18C396A  780733A0  1A1523477  6C7E8EF639      1  0  1  0    0  10     00   01
279    40    11872D5  700E6741  142A468EF  58FD1DEC72      0  0  0  1    1  11     10   00
280    41    030E5AB  601CCE83  08548D1DF  31FA3BD8E5      0  0  1  1    1  00     11   10
281    42    061CB57  40399D07  10A91A3BF  63F477B1CB      0  0  0  1    1  10     00   11
282    43    0C396AF  00733A0F  01523477E  47E8EF6396      1  0  0  1    0  00     10   00
283    44    1872D5F  00E6741F  02A468EFD  0FD1DEC72C      1  1  0  1    1  00     00   10
```

Sample Data

284	45	10E5ABE	01CCE83F	0548D1DFA	1FA3BD8E58	0	1	0	1	0	01	00	00
285	46	01CB57C	0399D07F	0A91A3BF4	3F477B1CB0	0	1	1	0	1	00	01	00
286	47	0396AF9	0733A0FE	1523477E9	7E8EF63961	0	0	0	1	1	11	00	01
287	48	072D5F3	0E6741FD	0A468EFD2	7D1DEC72C3	0	0	1	0	0	01	11	00
288	49	0E5ABE7	1CCE83FA	148D1DFA4	7A3BD8E587	1	1	0	0	1	10	01	11
289	50	1CB57CE	399D07F4	091A3BF49	7477B1CB0F	1	1	1	0	1	11	10	01
290	51	196AF9D	733A0FE9	123477E92	68EF63961E	1	0	0	1	1	00	11	10
291	52	12D5F3B	66741FD2	0468EFD25	51DEC72C3C	0	0	0	1	1	10	00	11
292	53	05ABE77	4CE83FA4	08D1DFA4B	23BD8E5879	0	1	1	1	1	00	10	00
293	54	0B57CEE	19D07F49	11A3BF496	477B1CB0F2	1	1	0	0	0	00	00	10
294	55	16AF9DC	33A0FE92	03477E92C	0EF63961E4	0	1	0	1	0	01	00	00
295	56	0D5F3B8	6741FD25	068EFD259	1DEC72C3C9	1	0	0	1	1	00	01	00
296	57	1ABE771	4E83FA4B	0D1DFA4B3	3BD8E58793	1	1	1	1	0	01	00	01
297	58	157CEE2	1D07F496	1A3BF4967	77B1CB0F26	0	0	1	1	1	00	01	00
298	59	0AF9DC5	3A0FE92D	1477E92CE	6F63961E4D	1	0	0	0	1	11	00	01
299	60	15F3B8B	741FD25A	08EFD259C	5EC72C3C9B	0	0	1	1	1	01	11	00
300	61	0BE7716	683FA4B4	11DFA4B39	3D8E587937	1	0	0	1	1	10	01	11
301	62	17CEE2D	507F4968	03BF49672	7B1CB0F26E	0	0	0	0	0	00	10	01
302	63	0F9DC5B	20FE92D0	077E92CE4	763961E4DC	1	1	0	0	0	00	00	10
303	64	1F3B8B6	41FD25A0	0EFD259C9	6C72C3C9B9	1	1	1	0	1	01	00	00
304	65	1E7716D	03FA4B40	1DFA4B393	58E5879373	1	1	1	1	1	11	01	00
305	66	1CEE2DB	07F49680	1BF496727	31CB0F26E6	1	1	1	1	1	11	11	01
306	67	19DC5B7	0FE92D00	17E92CE4E	63961E4DCD	1	1	0	1	0	10	11	11
307	68	13B8B6F	1FD25A00	0FD259C9C	472C3C9B9A	0	1	1	0	0	10	10	11
308	69	07716DF	3FA4B400	1FA4B3938	0E58793735	0	1	1	0	0	01	10	10
309	70	0EE2DBF	7F496800	1F4967271	1CB0F26E6A	1	0	1	1	0	10	01	10
310	71	1DC5B7F	7E92D000	1E92CE4E2	3961E4DCD4	1	1	1	0	1	11	10	01
311	72	1B8B6FF	7D25A001	1D259C9C4	72C3C9B9A9	1	0	1	1	0	01	11	10
312	73	1716DFF	7A4B4002	1A4B39389	6587937352	0	0	1	1	1	10	01	11
313	74	0E2DBFF	74968005	149672713	4B0F26E6A5	1	1	0	0	0	11	10	01
314	75	1C5B7FE	692D000B	092CE4E26	161E4DCD4B	1	0	1	0	1	00	11	10
315	76	18B6FFC	525A0017	1259C9C4D	2C3C9B9A96	1	0	0	0	1	10	00	11
316	77	116DFF8	24B4002F	04B39389B	587937352C	0	1	0	0	1	11	10	00
317	78	02DBFF1	4968005F	096727136	30F26E6A58	0	0	1	1	1	00	11	10
318	79	05B7FE3	12D000BF	12CE4E26C	61E4DCD4B1	0	1	0	1	0	11	00	11
319	80	0B6FFC7	25A0017F	059C9C4D8	43C9B9A963	1	1	0	1	0	00	11	00
320	81	16DFF8E	4B4002FF	0B39389B1	07937352C6	0	0	1	1	0	11	00	11
321	82	0DBFF1C	168005FF	167271363	0F26E6A58C	1	1	0	0	1	01	11	00
322	83	1B7FE38	2D000BFF	0CE4E26C7	1E4DCD4B18	1	0	1	0	1	10	01	11
323	84	16FFC70	5A0017FF	19C9C4D8F	3C9B9A9631	0	0	1	1	0	11	10	01
324	85	0DFF8E1	34002FFF	139389B1E	7937352C62	1	0	0	0	0	00	11	10
325	86	1BFF1C3	68005FFF	07271363D	726E6A58C4	1	0	0	0	1	10	00	11
326	87	17FE387	5000BFFE	0E4E26C7B	64DCD4B188	0	0	1	1	0	00	10	00
327	88	0FFC70F	20017FFD	1C9C4D8F6	49B9A96311	1	0	1	1	1	00	00	10
328	89	1FF8E1F	4002FFFB	19389B1ED	137352C623	1	0	1	0	0	01	00	00
329	90	1FF1C3F	0005FFF7	1271363DB	26E6A58C46	1	0	0	1	1	00	01	00
330	91	1FE387F	000BFFEE	04E26C7B6	4DCD4B188C	1	0	0	1	0	10	00	01
331	92	1FC70FF	0017FFDC	09C4D8F6D	1B9A963118	1	0	1	1	1	00	10	00
332	93	1F8E1FF	002FFFB8	1389B1EDA	37352C6231	1	0	0	0	1	01	00	10
333	94	1F1C3FF	005FFF70	071363DB4	6E6A58C462	1	0	0	0	0	00	01	00
334	95	1E387FE	00BFFEE0	0E26C7B68	5CD4B188C5	1	1	1	1	0	01	00	01
335	96	1C70FFC	017FFDC1	1C4D8F6D1	39A963118A	1	0	1	1	0	11	01	00
336	97	18E1FF9	02FFFB82	189B1EDA2	7352C62315	1	1	1	0	0	11	11	01
337	98	11C3FF2	05FFF705	11363DB45	66A58C462B	0	1	0	1	1	11	11	11
338	99	0387FE4	0BFFEE0A	026C7B68B	4D4B188C56	0	1	0	0	0	11	11	11
339	100	070FFC9	17FFDC15	04D8F6D16	1A963118AD	0	1	0	1	1	11	11	11
340	101	0E1FF92	2FFFB82B	09B1EDA2C	352C62315A	1	1	1	0	0	10	11	11

Sample Data

341	102	1C3FF24	5FFF7057	1363DB458	6A58C462B4	1	1	0	0	0	10	10	11
342	103	187FE48	3FFEE0AE	06C7B68B0	54B188C569	1	1	0	1	1	01	10	10
343	104	10FFC90	7FFDC15C	0D8F6D161	2963118AD2	0	1	1	0	1	01	01	10
344	105	01FF920	7FFB82B9	1B1EDA2C2	52C62315A5	0	1	1	1	0	00	01	01
345	106	03FF240	7FF70573	163DB4584	258C462B4B	0	1	0	1	0	10	00	01
346	107	07FE481	7FEE0AE6	0C7B68B08	4B188C5696	0	1	1	0	0	00	10	00
347	108	0FFC902	7FDC15CD	18F6D1610	163118AD2D	1	1	1	0	1	00	00	10
348	109	1FF9204	7FB82B9A	11EDA2C20	2C62315A5B	1	1	0	0	0	01	00	00
349	110	1FF2408	7F705735	03DB45841	58C462B4B6	1	0	0	1	1	00	01	00
350	111	1FE4810	7EE0AE6B	07B68B082	3188C5696C	1	1	0	1	1	10	00	01
351	112	1FC9021	7DC15CD6	0F6D16105	63118AD2D8	1	1	1	0	1	00	10	00
352	113	1F92042	7B82B9AD	1EDA2C20B	462315A5B0	1	1	1	0	1	00	00	10
353	114	1F24084	7705735A	1DB458416	0C462B4B61	1	0	1	0	0	01	00	00
354	115	1E48108	6E0AE6B5	1B68B082C	188C5696C3	1	0	1	1	0	11	01	00
355	116	1C90211	5C15CD6A	16D161059	3118AD2D86	1	0	0	0	0	10	11	01
356	117	1920422	382B9AD5	0DA2C20B3	62315A5B0D	1	0	1	0	0	10	10	11
357	118	1240845	705735AA	1B4584167	4462B4B61A	0	0	1	0	1	10	10	10
358	119	048108A	60AE6B55	168B082CF	08C5696C34	0	1	0	1	0	01	10	10
359	120	0902114	415CD6AB	0D161059E	118AD2D869	1	0	1	1	0	10	01	10
360	121	1204228	02B9AD56	1A2C20B3D	2315A5B0D2	0	1	1	0	0	11	10	01
361	122	0408451	05735AAD	14584167B	462B4B61A4	0	0	0	0	1	11	11	10
362	123	08108A2	0AE6B55B	08B082CF7	0C5696C348	1	1	1	0	0	10	11	11
363	124	1021144	15CD6AB6	1161059EF	18AD2D8690	0	1	0	1	0	10	10	11
364	125	0042289	2B9AD56C	02C20B3DE	315A5B0D20	0	1	0	0	1	10	10	10

1.5 FOURTH SET OF SAMPLES

```
Initial values for the key, pan address and clock

K'c4[0]   = 21   K'c4[1]   = 87    K'c4[2]   = F0    K'c4[3]  = 4A
K'c4[4]   = BA   K'c4[5]   = 90    K'c4[6]   = 31    K'c4[7]  = D0
K'c4[8]   = 78   K'c4[9]   = 0D    K'c4[10]  = 4C    K'c4[11] = 53
K'c4[12]  = E0   K'c4[13]  = 15    K'c4[14]  = 3A    K'c4[15] = 63

Addr4[0] = 2C   Addr4[1] = 7F    Addr4[2] = 94
Addr4[3] = 56   Addr4[4] = 0F    Addr4[5] = 1B

CL4[0]  = 5F   CL4[1]  = 1A    CL4[2]  = 00    CL4[3]  = 02


==============================================================================================
         Fill LFSRs with initial data
==============================================================================================

  t  clk#    LFSR1    LFSR2     LFSR3      LFSR4          X1 X2 X3 X4   Z  C[t+1] C[t] C[t-1]

  0     0    0000000* 00000000* 000000000* 0000000000*    0  0  0  0    0  00     00   00
  1     1    0000000* 00000001* 000000001* 0000000001*    0  0  0  0    0  00     00   00
  2     2    0000001* 00000002* 000000002* 0000000003*    0  0  0  0    0  00     00   00
  3     3    0000002* 00000004* 000000004* 0000000007*    0  0  0  0    0  00     00   00
  4     4    0000004* 00000009* 000000008* 000000000F*    0  0  0  0    0  00     00   00
  5     5    0000008* 00000013* 000000010* 000000001E*    0  0  0  0    0  00     00   00
  6     6    0000010* 00000027* 000000021* 000000003D*    0  0  0  0    0  00     00   00
  7     7    0000021* 0000004F* 000000043* 000000007A*    0  0  0  0    0  00     00   00
  8     8    0000042* 0000009F* 000000087* 00000000F4*    0  0  0  0    0  00     00   00
  9     9    0000084* 0000013F* 00000010F* 00000001E9*    0  0  0  0    0  00     00   00
 10    10    0000108* 0000027F* 00000021F* 00000003D2*    0  0  0  0    0  00     00   00
 11    11    0000211* 000004FE* 00000043E* 00000007A5*    0  0  0  0    0  00     00   00
 12    12    0000422* 000009FC* 00000087C* 0000000F4A*    0  0  0  0    0  00     00   00
 13    13    0000845* 000013F8* 0000010F8* 0000001E94*    0  0  0  0    0  00     00   00
 14    14    000108B* 000027F0* 0000021F1* 0000003D29*    0  0  0  0    0  00     00   00
 15    15    0002117* 00004FE1* 0000043E3* 0000007A52*    0  0  0  0    0  00     00   00
 16    16    000422E* 00009FC2* 0000087C6* 000000F4A4*    0  0  0  0    0  00     00   00
 17    17    000845D* 00013F84* 000010F8C* 000001E948*    0  0  0  0    0  00     00   00
 18    18    00108BA* 00027F08* 000021F18* 000003D290*    0  0  0  0    0  00     00   00
 19    19    0021174* 0004FE10* 000043E30* 000007A520*    0  0  0  0    0  00     00   00
 20    20    00422E8* 0009FC21* 000087C61* 00000F4A41*    0  0  0  0    0  00     00   00
 21    21    00845D1* 0013F842* 00010F8C3* 00001E9482*    0  0  0  0    0  00     00   00
 22    22    0108BA3* 0027F084* 00021F186* 00003D2905*    0  0  0  0    0  00     00   00
 23    23    0211747* 004FE109* 00043E30C* 00007A520B*    0  0  0  0    0  00     00   00
 24    24    0422E8F* 009FC213* 00087C619* 0000F4A417*    0  1  0  0    1  00     00   00
 25    25    0845D1E* 013F8426* 0010F8C32* 0001E9482F*    1  0  0  0    1  00     00   00
 26    26    108BA3D  027F084D* 0021F1864* 0003D2905E*    0  0  0  0    0  00     00   00
 27    27    011747B  04FE109B* 0043E30C9* 0007A520BC*    0  1  0  0    1  00     00   00
 28    28    022E8F6  09FC2136* 0087C6192* 000F4A4179*    0  1  0  0    1  00     00   00
 29    29    045D1EC  13F8426C* 010F8C325* 001E9482F2*    0  1  0  0    1  00     00   00
 30    30    08BA3D9  27F084D8* 021F1864B* 003D2905E5*    1  1  0  0    0  01     00   00
 31    31    11747B3  4FE109B0* 043E30C97* 007A520BCA*    0  1  0  0    1  00     00   00
 32    32    02E8F67  1FC21360  087C6192E* 00F4A41795*    0  1  1  1    1  01     00   00
 33    33    05D1ECF  3F8426C1  10F8C325C* 01E9482F2B*    0  1  0  1    0  01     00   00
 34    34    0BA3D9F  7F084D82  01F1864B8  03D2905E56*    1  0  0  1    0  01     00   00
```

Sample Data

35	35	1747B3E	7E109B04	03E30C970	07A520BCAC*	0	0	0	1	1	00	00	00
36	36	0E8F67C	7C213608	07C6192E1	0F4A417958*	1	0	0	0	1	00	00	00
37	37	1D1ECF8	78426C11	0F8C325C3	1E9482F2B1*	1	0	1	1	1	01	00	00
38	38	1A3D9F0	7084D822	1F1864B86	3D2905E563*	1	1	1	0	1	01	00	00
39	39	147B3E1	6109B044	1E30C970C	7A520BCAC6*	0	0	1	0	1	00	00	00

Start clocking Summation Combiner

40	1	08F67C2	42136088	1C6192E18	74A417958D	1	0	1	1	1	01	00	00
41	2	11ECF84	0426C111	18C325C30	69482F2B1B	0	0	1	0	0	00	01	00
42	3	03D9F08	084D8222	11864B861	52905E5637	0	0	0	1	1	11	00	01
43	4	07B3E10	109B0444	030C970C3	2520BCAC6E	0	1	0	0	0	01	11	00
44	5	0F67C21	21360889	06192E186	4A417958DC	1	0	0	0	0	10	01	11
45	6	1ECF843	426C1112	0C325C30C	1482F2B1B8	1	0	1	1	1	11	10	01
46	7	1D9F086	04D82225	1864B8619	2905E56370	1	1	1	0	0	01	11	10
47	8	1B3E10D	09B0444B	10C970C32	520BCAC6E1	1	1	0	0	1	10	01	11
48	9	167C21B	13608897	0192E1865	2417958DC3	0	0	0	0	0	00	10	01
49	10	0CF8436	26C1112F	0325C30CB	482F2B1B87	1	1	0	0	0	00	00	10
50	11	19F086D	4D82225E	064B86197	105E56370F	1	1	0	0	0	01	00	00
51	12	13E10DB	1B0444BC	0C970C32F	20BCAC6E1F	0	0	1	1	1	00	01	00
52	13	07C21B7	36088979	192E1865E	417958DC3F	0	0	1	0	1	11	00	01
53	14	0F8436E	6C1112F2	125C30CBD	02F2B1B87F	1	0	0	1	1	01	11	00
54	15	1F086DD	582225E4	04B86197B	05E56370FF	1	0	0	1	1	10	01	11
55	16	1E10DBA	30444BC9	0970C32F7	0BCAC6E1FF	1	0	1	1	1	11	10	01
56	17	1C21B75	60889793	12E1865EE	17958DC3FF	1	1	0	1	0	01	11	10
57	18	18436EA	41112F27	05C30CBDD	2F2B1B87FF	1	0	0	0	0	10	01	11
58	19	1086DD4	02225E4E	0B86197BA	5E56370FFF	0	0	1	0	1	00	10	01
59	20	010DBA8	0444BC9D	170C32F74	3CAC6E1FFF	0	0	0	1	1	01	00	10
60	21	021B750	0889793A	0E1865EE8	7958DC3FFF	0	1	1	0	1	00	01	00
61	22	0436EA0	1112F274	1C30CBDD0	72B1B87FFE	0	0	1	1	0	10	00	01
62	23	086DD40	2225E4E9	186197BA1	656370FFFC	1	0	1	0	0	00	10	00
63	24	10DBA81	444BC9D3	10C32F743	4AC6E1FFF8	0	0	0	1	1	01	00	10
64	25	01B7502	089793A7	01865EE86	158DC3FFF1	0	1	0	1	1	00	01	00
65	26	036EA05	112F274E	030CBDD0D	2B1B87FFE3	0	0	0	0	0	11	00	01
66	27	06DD40B	225E4E9C	06197BA1A	56370FFFC6	0	0	0	0	1	10	11	00
67	28	0DBA817	44BC9D39	0C32F7434	2C6E1FFF8D	1	1	1	0	1	10	10	11
68	29	1B7502E	09793A72	1865EE868	58DC3FFF1B	1	0	1	1	1	01	10	10
69	30	16EA05D	12F274E5	10CBDD0D0	31B87FFE36	0	1	0	1	1	01	01	10
70	31	0DD40BA	25E4E9CB	0197BA1A1	6370FFFC6D	1	1	0	0	1	11	01	01
71	32	1BA8174	4BC9D397	032F74343	46E1FFF8DA	1	1	0	1	0	11	11	01
72	33	17502E8	1793A72F	065EE8687	0DC3FFF1B4	0	1	0	1	1	11	11	11
73	34	0EA05D0	2F274E5E	0CBDD0D0F	1B87FFE369	1	0	1	1	0	10	11	11
74	35	1D40BA0	5E4E9CBD	197BA1A1F	370FFFC6D2	1	0	1	0	0	10	10	11
75	36	1A81741	3C9D397B	12F74343F	6E1FFF8DA5	1	1	0	0	0	01	10	10
76	37	1502E82	793A72F6	05EE8687F	5C3FFF1B4B	0	0	0	0	1	00	01	10
77	38	0A05D05	7274E5ED	0BDD0D0FF	387FFE3696	1	0	1	0	0	10	00	01
78	39	140BA0B	64E9CBDA	17BA1A1FF	70FFFC6D2C	0	1	0	1	0	00	10	00
79	40	0817416	49D397B4	0F74343FE	61FFF8DA59	1	1	1	1	0	11	00	10
80	41	102E82C	13A72F69	1EE8687FD	43FFF1B4B3	0	1	1	1	0	00	11	00
81	42	005D058	274E5ED2	1DD0D0FFA	07FFE36966	0	0	1	1	0	11	00	11
82	43	00BA0B0	4E9CBDA5	1BA1A1FF5	0FFFC6D2CD	0	1	1	1	0	00	11	00
83	44	0174160	1D397B4A	174343FEA	1FFF8DA59B	0	0	0	1	1	10	00	11
84	45	02E82C0	3A72F695	0E8687FD4	3FFF1B4B37	0	0	1	1	0	00	10	00
85	46	05D0580	74E5ED2B	1D0D0FFA9	7FFE36966E	0	1	1	1	1	00	00	10
86	47	0BA0B00	69CBDA56	1A1A1FF53	7FFC6D2CDC	1	1	1	1	0	10	00	00
87	48	1741600	5397B4AC	14343FEA6	7FF8DA59B8	0	1	0	1	0	00	10	00
88	49	0E82C01	272F6959	08687FD4D	7FF1B4B370	1	0	1	1	1	00	00	10

Sample Data

89	50	1D05802	4E5ED2B3	10D0FFA9A	7FE36966E0	1	0	0	1	0	01	00	00
90	51	1A0B004	1CBDA566	01A1FF535	7FC6D2CDC0	1	1	0	1	0	11	01	00
91	52	1416009	397B4ACC	0343FEA6B	7F8DA59B80	0	0	0	1	0	10	11	01
92	53	082C013	72F69599	0687FD4D7	7F1B4B3701	1	1	0	0	0	10	10	11
93	54	1058026	65ED2B33	0D0FFA9AF	7E36966E03	0	1	1	0	0	01	10	10
94	55	00B004D	4BDA5667	1A1FF535E	7C6D2CDC06	0	1	1	0	1	01	01	10
95	56	016009B	17B4ACCE	143FEA6BD	78DA59B80D	0	1	0	1	1	11	01	01
96	57	02C0137	2F69599D	087FD4D7B	71B4B3701A	0	0	1	1	1	10	11	01
97	58	058026F	5ED2B33B	10FFA9AF6	636966E034	0	1	0	0	1	01	10	11
98	59	0B004DF	3DA56677	01FF535ED	46D2CDC068	1	1	0	1	0	10	01	10
99	60	16009BF	7B4ACCEF	03FEA6BDB	0DA59B80D0	0	0	0	1	1	00	10	01
100	61	0C0137F	769599DF	07FD4D7B7	1B4B3701A1	1	1	0	0	0	00	00	10
101	62	18026FE	6D2B33BE	0FFA9AF6E	36966E0342	1	0	1	1	1	01	00	00
102	63	1004DFC	5A56677D	1FF535EDD	6D2CDC0684	0	0	1	0	0	00	01	00
103	64	0009BF9	34ACCEFB	1FEA6BDBB	5A59B80D09	0	1	1	0	0	10	00	01
104	65	00137F2	69599DF7	1FD4D7B76	34B3701A12	0	0	1	1	0	00	10	00
105	66	0026FE5	52B33BEF	1FA9AF6EC	6966E03424	0	1	1	0	0	00	00	10
106	67	004DFCA	256677DF	1F535EDD8	52CDC06848	0	0	1	1	0	01	00	00
107	68	009BF94	4ACCEFBE	1EA6BDBB0	259B80D091	0	1	1	1	0	11	01	00
108	69	0137F29	1599DF7C	1D4D7B760	4B3701A123	0	1	1	0	1	10	11	01
109	70	026FE53	2B33BEF9	1A9AF6EC0	166E034246	0	0	1	0	1	01	10	11
110	71	04DFCA7	56677DF2	1535EDD81	2CDC06848D	0	0	0	1	0	01	01	10
111	72	09BF94F	2CCEFBE4	0A6BDBB03	59B80D091B	1	1	1	1	1	00	01	01
112	73	137F29E	599DF7C9	14D7B7607	33701A1236	0	1	0	0	1	11	00	01
113	74	06FE53C	333BEF93	09AF6EC0E	66E034246C	0	0	1	1	1	01	11	00
114	75	0DFCA79	6677DF26	135EDD81D	4DC06848D8	1	0	0	1	1	10	01	11
115	76	1BF94F2	4CEFBE4D	06BDBB03B	1B80D091B1	1	1	0	1	1	11	10	01
116	77	17F29E5	19DF7C9A	0D7B76077	3701A12363	0	1	1	0	1	00	11	10
117	78	0FE53CA	33BEF934	1AF6EC0EF	6E034246C6	1	1	1	0	1	11	00	11
118	79	1FCA794	677DF269	15EDD81DF	5C06848D8C	1	0	0	0	0	01	11	00
119	80	1F94F29	4EFBE4D2	0BDBB03BE	380D091B19	1	1	1	0	0	01	01	11
120	81	1F29E53	1DF7C9A5	17B76077D	701A123633	1	1	0	0	1	11	01	01
121	82	1E53CA6	3BEF934B	0F6EC0EFB	6034246C66	1	1	1	0	0	11	11	01
122	83	1CA794D	77DF2696	1EDD81DF6	406848D8CD	1	1	1	0	0	10	11	11
123	84	194F29B	6FBE4D2C	1DBB03BED	00D091B19B	1	1	1	1	0	11	10	11
124	85	129E536	5F7C9A59	1B76077DA	01A1236337	0	0	1	1	1	00	11	10
125	86	053CA6C	3EF934B3	16EC0EFB4	034246C66E	0	1	0	0	1	10	00	11
126	87	0A794D9	7DF26967	0DD81DF69	06848D8CDD	1	1	1	1	0	01	10	00
127	88	14F29B3	7BE4D2CF	1BB03BED3	0D091B19BB	0	1	1	0	1	01	01	10
128	89	09E5366	77C9A59F	176077DA6	1A12363377	1	1	0	0	1	11	01	01
129	90	13CA6CD	6F934B3F	0EC0EFB4D	34246C66EF	0	1	1	0	1	10	11	01
130	91	0794D9B	5F26967F	1D81DF69A	6848D8CDDF	0	0	1	0	1	01	10	11
131	92	0F29B37	3E4D2CFE	1B03BED35	5091B19BBE	1	0	1	1	0	10	01	10
132	93	1E5366F	7C9A59FD	16077DA6B	212363377C	1	1	0	0	0	11	10	01
133	94	1CA6CDF	7934B3FB	0C0EFB4D6	4246C66EF9	1	0	1	0	1	00	11	10
134	95	194D9BE	726967F6	181DF69AD	048D8CDDF2	1	0	1	1	1	11	00	11
135	96	129B37D	64D2CFED	103BED35B	091B19BBE5	0	1	0	0	0	01	11	00
136	97	05366FA	49A59FDA	0077DA6B7	12363377CA	0	1	0	0	0	10	01	11
137	98	0A6CDF5	134B3FB4	00EFB4D6E	246C66EF95	1	0	0	0	1	00	10	01
138	99	14D9BEA	26967F69	01DF69ADD	48D8CDDF2B	0	1	0	1	0	00	00	10
139	100	09B37D4	4D2CFED2	03BED35BB	11B19BBE56	1	0	0	1	0	01	00	00
140	101	1366FA8	1A59FDA5	077DA6B77	2363377CAC	0	0	0	0	1	01	01	00
141	102	06CDF51	34B3FB4A	0EFB4D6EF	46C66EF959	0	1	1	1	0	00	01	01
142	103	0D9BEA2	6967F695	1DF69ADDF	0D8CDDF2B2	1	0	1	1	1	10	00	01
143	104	1B37D45	52CFED2A	1BED35BBF	1B19BBE564	1	1	1	0	1	00	10	00
144	105	166FA8A	259FDA54	17DA6B77E	363377CAC8	0	1	0	0	1	01	00	10
145	106	0CDF515	4B3FB4A9	0FB4D6EFC	6C66EF9591	1	0	1	0	1	00	01	00

Sample Data

146	107	19BEA2B	167F6952	1F69ADDF8	58CDDF2B22	1	0	1	1	1	10	00	01
147	108	137D457	2CFED2A5	1ED35BBF1	319BBE5645	0	1	1	1	1	00	10	00
148	109	06FA8AF	59FDA54A	1DA6B77E2	63377CAC8B	0	1	1	0	0	00	00	10
149	110	0DF515F	33FB4A95	1B4D6EFC4	466EF95916	1	1	1	0	1	01	00	00
150	111	1BEA2BF	67F6952A	169ADDF88	0CDDF2B22C	1	1	0	1	0	11	01	00
151	112	17D457F	4FED2A55	0D35BBF10	19BBE56459	0	1	1	1	0	11	11	01
152	113	0FA8AFE	1FDA54AB	1A6B77E20	3377CAC8B3	1	1	1	0	0	10	11	11
153	114	1F515FD	3FB4A957	14D6EFC40	66EF959166	1	1	0	1	1	10	10	11
154	115	1EA2BFA	7F6952AF	09ADDF880	4DDF2B22CC	1	0	1	1	1	01	10	10
155	116	1D457F4	7ED2A55F	135BBF100	1BBE564598	1	1	0	1	0	10	01	10
156	117	1A8AFE8	7DA54ABF	06B77E200	377CAC8B31	1	1	0	0	0	11	10	01
157	118	1515FD0	7B4A957F	0D6EFC401	6EF9591663	0	0	1	1	1	00	11	10
158	119	0A2BFA1	76952AFE	1ADDF8803	5DF2B22CC7	1	1	1	1	0	00	00	11
159	120	1457F42	6D2A55FD	15BBF1007	3BE564598E	0	0	0	1	1	00	00	00
160	121	08AFE84	5A54ABFB	0B77E200F	77CAC8B31C	1	0	1	1	1	01	00	00
161	122	115FD09	34A957F7	16EFC401F	6F95916639	0	1	0	1	1	00	01	00
162	123	02BFA12	6952AFEF	0DDF8803E	5F2B22CC73	0	0	1	0	1	11	00	01
163	124	057F424	52A55FDF	1BBF1007D	3E564598E7	0	1	1	0	1	01	11	00
164	125	0AFE848	254ABFBF	177E200FA	7CAC8B31CF	1	0	0	1	1	10	01	11
165	126	15FD090	4A957F7E	0EFC401F5	795916639E	0	1	1	0	0	11	10	01
166	127	0BFA121	152AFEFD	1DF8803EA	72B22CC73C	1	0	1	1	0	01	11	10
167	128	17F4243	2A55FDFA	1BF1007D4	6564598E78	0	0	1	0	0	10	01	11
168	129	0FE8486	54ABFBF4	17E200FA8	4AC8B31CF0	1	1	0	1	1	11	10	01
169	130	1FD090C	2957F7E8	0FC401F51	15916639E1	1	0	1	1	0	01	11	10
170	131	1FA1219	52AFEFD1	1F8803EA3	2B22CC73C2	1	1	1	0	0	01	01	11
171	132	1F42432	255FDFA2	1F1007D47	564598E785	1	0	1	0	1	11	01	01
172	133	1E84865	4ABFBF44	1E200FA8F	2C8B31CF0B	1	1	1	1	1	11	11	01
173	134	1D090CB	157F7E88	1C401F51E	5916639E17	1	0	1	0	1	11	11	11
174	135	1A12196	2AFEFD11	18803EA3C	322CC73C2E	1	1	1	0	0	10	11	11
175	136	142432C	55FDFA23	11007D479	64598E785C	0	1	0	0	1	01	10	11
176	137	0848659	2BFBF446	0200FA8F2	48B31CF0B9	1	1	0	1	0	10	01	10
177	138	1090CB2	57F7E88C	0401F51E4	116639E173	0	1	0	0	1	00	10	01
178	139	0121964	2FEFD118	0803EA3C8	22CC73C2E6	0	1	1	1	1	00	00	10
179	140	02432C9	5FDFA230	1007D4791	4598E785CD	0	1	0	1	0	01	00	00
180	141	0486593	3FBF4461	000FA8F23	0B31CF0B9B	0	1	0	0	0	00	01	00
181	142	090CB26	7F7E88C3	001F51E47	16639E1736	1	0	0	0	1	11	00	01
182	143	121964D	7EFD1187	003EA3C8F	2CC73C2E6C	0	1	0	1	1	01	11	00
183	144	0432C9B	7DFA230E	007D4791E	598E785CD8	0	1	0	1	1	10	01	11
184	145	0865936	7BF4461C	00FA8F23C	331CF0B9B0	1	1	0	0	0	11	10	01
185	146	10CB26D	77E88C38	01F51E479	6639E17361	0	1	0	0	0	00	11	10
186	147	01964DA	6FD11870	03EA3C8F2	4C73C2E6C2	0	1	0	0	1	10	00	11
187	148	032C9B4	5FA230E1	07D4791E4	18E785CD84	0	1	0	1	0	00	10	00
188	149	0659368	3F4461C2	0FA8F23C9	31CF0B9B09	0	0	1	1	0	00	00	10
189	150	0CB26D0	7E88C384	1F51E4793	639E173612	1	1	1	1	0	10	00	00
190	151	1964DA0	7D118709	1EA3C8F27	473C2E6C24	1	0	1	0	0	00	10	00
191	152	12C9B41	7A230E12	1D4791E4E	0E785CD848	0	0	1	0	1	01	00	10
192	153	0593683	74461C24	1A8F23C9C	1CF0B9B091	0	0	1	1	1	00	01	00
193	154	0B26D06	688C3848	151E47938	39E1736123	1	1	0	1	1	10	00	01
194	155	164DA0D	51187091	0A3C8F271	73C2E6C247	0	0	1	1	0	00	10	00
195	156	0C9B41A	2230E123	14791E4E3	6785CD848F	1	0	0	1	0	00	00	10
196	157	1936835	4461C247	08F23C9C6	4F0B9B091E	1	0	1	0	0	01	00	00
197	158	126D06A	08C3848E	11E47938D	1E1736123C	0	1	0	0	0	00	01	00
198	159	04DA0D5	1187091C	03C8F271B	3C2E6C2478	0	1	0	0	1	11	00	01
199	160	09B41AA	230E1238	0791E4E37	785CD848F1	1	0	0	0	0	01	11	00
200	161	1368354	461C2470	0F23C9C6F	70B9B091E3	0	0	1	1	1	10	01	11
201	162	06D06A9	0C3848E1	1E47938DF	61736123C6	0	0	1	0	1	00	10	01
202	163	0DA0D52	187091C3	1C8F271BE	42E6C2478D	1	0	1	1	1	00	00	10

Sample Data

203	164	1B41AA4	30E12387	191E4E37C	05CD848F1A	1	1	1	1	0	10	00	00
204	165	1683549	61C2470F	123C9C6F9	0B9B091E34	0	1	0	1	0	00	10	00
205	166	0D06A92	43848E1E	047938DF3	1736123C68	1	1	0	0	0	00	00	10
206	167	1A0D524	07091C3C	08F271BE7	2E6C2478D1	1	0	1	0	0	01	00	00
207	168	141AA49	0E123879	11E4E37CF	5CD848F1A2	0	0	0	1	0	00	01	00
208	169	0835492	1C2470F3	03C9C6F9F	39B091E345	1	0	0	1	0	10	00	01
209	170	106A925	3848E1E6	07938DF3F	736123C68B	0	0	0	0	0	11	10	00
210	171	00D524A	7091C3CD	0F271BE7E	66C2478D16	0	1	1	1	0	01	11	10
211	172	01AA495	6123879B	1E4E37CFD	4D848F1A2D	0	0	1	1	1	10	01	11
212	173	035492A	42470F36	1C9C6F9FB	1B091E345B	0	0	1	0	1	00	10	01
213	174	06A9255	048E1E6C	1938DF3F6	36123C68B7	0	1	1	0	0	00	00	10
214	175	0D524AB	091C3CD8	1271BE7EC	6C2478D16E	1	0	0	0	1	00	00	00
215	176	1AA4957	123879B1	04E37CFD8	5848F1A2DD	1	0	0	0	1	00	00	00
216	177	15492AF	2470F363	09C6F9FB0	3091E345BA	0	0	1	1	0	01	00	00
217	178	0A9255E	48E1E6C7	138DF3F61	6123C68B75	1	1	0	0	1	00	01	00
218	179	1524ABD	11C3CD8F	071BE7EC3	42478D16EB	0	1	0	0	1	11	00	01
219	180	0A4957B	23879B1F	0E37CFD87	048F1A2DD6	1	1	1	1	1	00	11	00
220	181	1492AF6	470F363F	1C6F9FB0E	091E345BAD	0	0	1	0	1	10	00	11
221	182	09255EC	0E1E6C7F	18DF3F61D	123C68B75B	1	0	1	0	0	00	10	00
222	183	124ABD9	1C3CD8FF	11BE7EC3A	2478D16EB6	0	0	0	0	0	01	00	10
223	184	04957B3	3879B1FE	037CFD874	48F1A2DD6D	0	0	0	1	0	00	01	00
224	185	092AF66	70F363FD	06F9FB0E9	11E345BADB	1	1	0	1	1	10	00	01
225	186	1255ECD	61E6C7FA	0DF3F61D3	23C68B75B7	0	1	1	1	1	00	10	00
226	187	04ABD9B	43CD8FF5	1BE7EC3A7	478D16EB6E	0	1	1	1	1	00	00	10
227	188	0957B37	079B1FEA	17CFD874E	0F1A2DD6DD	1	1	0	0	0	01	00	00
228	189	12AF66F	0F363FD4	0F9FB0E9C	1E345BADBB	0	0	1	0	0	00	01	00
229	190	055ECDE	1E6C7FA9	1F3F61D39	3C68B75B76	0	0	1	0	1	11	00	01
230	191	0ABD9BC	3CD8FF53	1E7EC3A73	78D16EB6EC	1	1	1	1	1	00	11	00
231	192	157B379	79B1FEA7	1CFD874E6	71A2DD6DD9	0	1	1	1	1	11	00	11
232	193	0AF66F3	7363FD4E	19FB0E9CD	6345BADBB2	1	0	1	0	1	01	11	00
233	194	15ECDE6	66C7FA9D	13F61D39A	468B75B765	0	1	0	1	1	10	01	11
234	195	0BD9BCC	4D8FF53A	07EC3A735	0D16EB6ECA	1	1	0	0	0	11	10	01
235	196	17B3799	1B1FEA75	0FD874E6A	1A2DD6DD94	0	0	1	0	0	00	11	10
236	197	0F66F33	363FD4EA	1FB0E9CD5	345BADBB28	1	0	1	0	0	11	00	11
237	198	1ECDE67	6C7FA9D5	1F61D39AA	68B75B7650	1	0	1	1	0	00	11	00
238	199	1D9BCCF	58FF53AB	1EC3A7354	516EB6ECA0	1	1	1	0	1	11	00	11
239	200	1B3799E	31FEA756	1D874E6A8	22DD6DD940	1	1	1	1	1	00	11	00

```
Z[0]  = 3F
Z[1]  = B1
Z[2]  = 67
Z[3]  = D2
Z[4]  = 2F
Z[5]  = A6
Z[6]  = 1F
Z[7]  = B9
Z[8]  = E6
Z[9]  = 84
Z[10] = 43
Z[11] = 07
Z[12] = D8
Z[13] = 1E
Z[14] = E7
Z[15] = C3
```

Sample Data

```
================================================================================================
         Reload this pattern into the LFSRs
         Hold content of Summation Combiner regs and calculate new C[t+1] and Z values
================================================================================================
LFSR1  <= 0E62F3F
LFSR2  <= 6C84A6B1
LFSR3  <= 11E431F67
LFSR4  <= 61E707B9D2
C[t+1] <= 00

================================================================================================
         Generating 125 key symbols (encryption/decryption sequence)
================================================================================================
```

240	1	0E62F3F	6C84A6B1	11E431F67	61E707B9D2	1	1	0	1	0	00	11	00
241	2	1CC5E7F	59094D63	03C863ECE	43CE0F73A5	1	0	0	1	0	11	00	11
242	3	198BCFF	32129AC6	0790C7D9D	079C1EE74A	1	0	0	1	1	01	11	00
243	4	13179FE	6425358C	0F218FB3A	0F383DCE94	0	0	1	0	0	10	01	11
244	5	062F3FD	484A6B19	1E431F675	1E707B9D28	0	0	1	0	1	00	10	01
245	6	0C5E7FB	1094D632	1C863ECEB	3CE0F73A50	1	1	1	1	0	11	00	10
246	7	18BCFF7	2129AC64	190C7D9D7	79C1EE74A1	1	0	1	1	0	00	11	00
247	8	1179FEE	425358C8	1218FB3AE	7383DCE942	0	0	0	1	1	10	00	11
248	9	02F3FDD	04A6B190	0431F675D	6707B9D285	0	1	0	0	1	11	10	00
249	10	05E7FBB	094D6320	0863ECEBB	4E0F73A50B	0	0	1	0	0	00	11	10
250	11	0BCFF77	129AC640	10C7D9D77	1C1EE74A16	1	1	0	0	0	11	00	11
251	12	179FEEE	25358C80	018FB3AEE	383DCE942C	0	0	0	0	1	10	11	00
252	13	0F3FDDC	4A6B1900	031F675DD	707B9D2859	1	0	0	0	1	01	10	11
253	14	1E7FBB8	14D63200	063ECEBBA	60F73A50B3	1	1	0	1	0	10	01	10
254	15	1CFF771	29AC6401	0C7D9D774	41EE74A167	1	1	1	1	0	10	10	01
255	16	19FEEE2	5358C803	18FB3AEE9	03DCE942CE	1	0	1	1	1	01	10	10
256	17	13FDDC4	26B19007	11F675DD2	07B9D2859C	0	1	0	1	1	01	01	10
257	18	07FBB88	4D63200E	03ECEBBA4	0F73A50B38	0	0	0	0	1	10	01	01
258	19	0FF7711	1AC6401D	07D9D7748	1EE74A1670	1	1	0	1	1	11	10	01
259	20	1FEEE23	358C803B	0FB3AEE91	3DCE942CE1	1	1	1	1	1	01	11	10
260	21	1FDDC47	6B190076	1F675DD23	7B9D2859C2	1	0	1	1	0	01	01	11
261	22	1FBB88F	563200ED	1ECEBBA47	773A50B385	1	0	1	0	1	11	01	01
262	23	1F7711E	2C6401DB	1D9D7748F	6E74A1670A	1	0	1	0	1	10	11	01
263	24	1EEE23D	58C803B6	1B3AEE91E	5CE942CE15	1	1	1	1	0	11	10	11
264	25	1DDC47A	3190076C	1675DD23D	39D2859C2B	1	1	0	1	0	01	11	10
265	26	1BB88F4	63200ED9	0CEBBA47A	73A50B3856	1	0	1	1	0	01	01	11
266	27	17711E8	46401DB2	19D7748F5	674A1670AD	0	0	1	0	0	11	01	01
267	28	0EE23D0	0C803B64	13AEE91EA	4E942CE15B	1	1	0	1	0	11	11	01
268	29	1DC47A0	190076C8	075DD23D4	1D2859C2B7	1	0	0	0	0	11	11	11
269	30	1B88F41	3200ED90	0EBBA47A9	3A50B3856E	1	0	1	0	1	11	11	11
270	31	1711E83	6401DB20	1D7748F53	74A1670ADC	0	0	1	1	1	11	11	11
271	32	0E23D07	4803B641	1AEE91EA7	6942CE15B8	1	0	1	0	1	11	11	11
272	33	1C47A0F	10076C82	15DD23D4F	52859C2B71	1	0	0	1	1	11	11	11
273	34	188F41E	200ED905	0BBA47A9E	250B3856E3	1	0	1	0	1	11	11	11
274	35	111E83C	401DB20A	17748F53D	4A1670ADC7	0	0	0	0	1	00	11	11
275	36	023D078	003B6414	0EE91EA7A	142CE15B8E	0	0	1	0	1	10	00	11
276	37	047A0F0	0076C828	1DD23D4F5	2859C2B71C	0	0	1	0	1	11	10	00
277	38	08F41E1	00ED9050	1BA47A9EA	50B3856E39	1	1	1	1	1	01	11	10
278	39	11E83C2	01DB20A0	1748F53D5	21670ADC72	0	1	0	0	0	10	01	11
279	40	03D0785	03B64141	0E91EA7AA	42CE15B8E4	0	1	1	1	1	11	10	01
280	41	07A0F0A	076C8283	1D23D4F54	059C2B71C8	0	0	1	1	1	00	11	10
281	42	0F41E14	0ED90507	1A47A9EA9	0B3856E390	1	1	1	0	1	11	00	11
282	43	1E83C29	1DB20A0F	148F53D52	1670ADC720	1	1	0	0	1	01	11	00
283	44	1D07853	3B64141E	091EA7AA5	2CE15B8E40	1	0	1	1	0	01	01	11

Sample Data

284	45	1A0F0A6	76C8283C	123D4F54B	59C2B71C81	1	1	0	1	0	00	01	01
285	46	141E14C	6D905079	047A9EA97	33856E3902	0	1	0	1	0	10	00	01
286	47	083C299	5B20A0F2	08F53D52F	670ADC7204	1	0	1	0	0	00	10	00
287	48	1078533	364141E4	11EA7AA5E	4E15B8E408	0	0	0	0	0	01	00	10
288	49	00F0A67	6C8283C8	03D4F54BC	1C2B71C811	0	1	0	0	0	00	01	00
289	50	01E14CE	59050791	07A9EA978	3856E39022	0	0	0	0	0	11	00	01
290	51	03C299C	320A0F23	0F53D52F1	70ADC72045	0	0	1	1	1	01	11	00
291	52	0785339	64141E47	1EA7AA5E2	615B8E408A	0	0	1	0	0	10	01	11
292	53	0F0A673	48283C8E	1D4F54BC4	42B71C8115	1	0	1	1	1	11	10	01
293	54	1E14CE6	1050791C	1A9EA9788	056E39022B	1	0	1	0	1	00	11	10
294	55	1C299CD	20A0F239	153D52F10	0ADC720456	1	1	0	1	1	11	00	11
295	56	185339B	4141E472	0A7AA5E20	15B8E408AC	1	0	1	1	0	00	11	00
296	57	10A6736	0283C8E4	14F54BC41	2B71C81158	0	1	0	0	1	10	00	11
297	58	014CE6C	050791C9	09EA97882	56E39022B0	0	0	1	1	0	00	10	00
298	59	0299CD9	0A0F2393	13D52F104	2DC7204561	0	0	0	1	1	01	00	10
299	60	05339B3	141E4726	07AA5E208	5B8E408AC3	0	0	0	1	0	00	01	00
300	61	0A67366	283C8E4C	0F54BC411	371C811587	1	0	1	0	0	10	00	01
301	62	14CE6CC	50791C98	1EA978822	6E39022B0F	0	0	1	0	1	11	10	00
302	63	099CD99	20F23930	1D52F1045	5C7204561E	1	1	1	0	0	01	11	10
303	64	1339B33	41E47260	1AA5E208B	38E408AC3D	0	1	1	1	0	01	01	11
304	65	0673666	03C8E4C0	154BC4117	71C811587A	0	1	0	1	1	11	01	01
305	66	0CE6CCC	0791C980	0A978822E	639022B0F5	1	1	1	1	1	11	11	01
306	67	19CD999	0F239301	152F1045C	47204561EB	1	0	0	0	0	11	11	11
307	68	139B332	1E472603	0A5E208B9	0E408AC3D6	0	0	1	0	0	11	11	11
308	69	0736664	3C8E4C06	14BC41172	1C811587AD	0	1	0	1	1	11	11	11
309	70	0E6CCC8	791C980C	0978822E5	39022B0F5A	1	0	1	0	1	11	11	11
310	71	1CD9990	72393019	12F1045CB	7204561EB4	1	0	0	0	0	11	11	11
311	72	19B3320	64726033	05E208B97	6408AC3D69	1	0	0	0	0	11	11	11
312	73	1366640	48E4C067	0BC41172F	4811587AD3	0	1	1	0	1	11	11	11
313	74	06CCC81	11C980CF	178822E5E	1022B0F5A6	0	1	0	0	0	11	11	11
314	75	0D99903	2393019E	0F1045CBC	204561EB4C	1	1	1	0	0	10	11	11
315	76	1B33206	4726033D	1E208B979	408AC3D699	1	0	1	1	1	10	10	11
316	77	166640D	0E4C067B	1C41172F2	011587AD33	0	0	1	0	1	10	10	10
317	78	0CCC81B	1C980CF6	18822E5E5	022B0F5A66	1	1	1	0	1	01	10	10
318	79	1999036	393019EC	11045CBCA	04561EB4CD	1	0	0	0	0	01	01	10
319	80	133206C	726033D9	0208B9794	08AC3D699B	0	0	0	1	0	11	01	01
320	81	06640D9	64C067B3	041172F29	11587AD337	0	1	0	0	0	10	11	01
321	82	0CC81B3	4980CF66	0822E5E53	22B0F5A66F	1	1	1	1	0	11	10	11
322	83	1990366	13019ECC	1045CBCA6	4561EB4CDF	1	0	0	0	0	00	11	10
323	84	13206CC	26033D98	008B9794D	0AC3D699BE	0	0	0	1	1	10	00	11
324	85	0640D98	4C067B31	01172F29B	1587AD337C	0	0	0	1	1	11	10	00
325	86	0C81B30	180CF662	022E5E537	2B0F5A66F9	1	0	0	0	0	00	11	10
326	87	1903660	3019ECC5	045CBCA6F	561EB4CDF3	1	0	0	0	1	10	00	11
327	88	1206CC1	6033D98A	08B9794DE	2C3D699BE6	0	0	1	0	1	11	10	00
328	89	040D983	4067B315	1172F29BD	587AD337CC	0	0	0	0	1	11	11	10
329	90	081B306	00CF662A	02E5E537A	30F5A66F98	1	1	0	1	0	10	11	11
330	91	103660C	019ECC55	05CBCA6F4	61EB4CDF31	0	1	0	1	0	10	10	11
331	92	006CC19	033D98AB	0B9794DE8	43D699BE62	0	0	1	1	0	01	10	10
332	93	00D9833	067B3156	172F29BD0	07AD337CC5	0	0	0	1	0	01	01	10
333	94	01B3066	0CF662AC	0E5E537A0	0F5A66F98B	0	1	1	0	1	11	01	01
334	95	03660CD	19ECC559	1CBCA6F41	1EB4CDF317	0	1	1	1	0	11	11	01
335	96	06CC19B	33D98AB2	19794DE83	3D699BE62F	0	1	1	0	1	11	11	11
336	97	0D98336	67B31565	12F29BD06	7AD337CC5F	1	1	0	1	0	10	11	11
337	98	1B3066D	4F662ACA	05E537A0C	75A66F98BF	1	0	0	1	0	10	10	11
338	99	1660CDB	1ECC5594	0BCA6F418	6B4CDF317E	0	1	1	0	0	01	10	10
339	100	0CC19B7	3D98AB29	1794DE831	5699BE62FC	1	1	0	1	0	10	01	10
340	101	198336F	7B315653	0F29BD062	2D337CC5F9	1	0	1	0	0	11	10	01

Sample Data

341	102	13066DE	7662ACA7	1E537A0C5	5A66F98BF2	0	0	1	0	0	00	11	10
342	103	060CDBC	6CC5594F	1CA6F418B	34CDF317E4	0	1	1	1	1	11	00	11
343	104	0C19B78	598AB29F	194DE8317	699BE62FC9	1	1	1	1	1	00	11	00
344	105	18336F1	3315653F	129BD062E	5337CC5F92	1	0	0	0	1	10	00	11
345	106	1066DE2	662ACA7E	0537A0C5C	266F98BF25	0	0	0	0	0	11	10	00
346	107	00CDBC5	4C5594FD	0A6F418B9	4CDF317E4B	0	0	1	1	1	00	11	10
347	108	019B78B	18AB29FA	14DE83172	19BE62FC96	0	1	0	1	0	11	00	11
348	109	0336F16	315653F4	09BD062E5	337CC5F92C	0	0	1	0	0	01	11	00
349	110	066DE2D	62ACA7E8	137A0C5CA	66F98BF258	0	1	0	1	1	10	01	11
350	111	0CDBC5B	45594FD1	06F418B95	4DF317E4B1	1	0	0	1	0	11	10	01
351	112	19B78B6	0AB29FA2	0DE83172B	1BE62FC962	1	1	1	1	1	01	11	10
352	113	136F16C	15653F45	1BD062E57	37CC5F92C5	0	0	1	1	1	10	01	11
353	114	06DE2D9	2ACA7E8B	17A0C5CAE	6F98BF258B	0	1	0	1	0	11	10	01
354	115	0DBC5B2	5594FD16	0F418B95D	5F317E4B16	1	1	1	0	0	01	11	10
355	116	1B78B64	2B29FA2C	1E83172BB	3E62FC962C	1	0	1	0	1	10	01	11
356	117	16F16C8	5653F458	1D062E577	7CC5F92C58	0	0	1	1	0	11	10	01
357	118	0DE2D91	2CA7E8B0	1A0C5CAEF	798BF258B1	1	1	1	1	1	01	11	10
358	119	1BC5B23	594FD161	1418B95DF	7317E4B163	1	0	0	0	0	10	01	11
359	120	178B647	329FA2C2	083172BBF	662FC962C7	0	1	1	0	0	11	10	01
360	121	0F16C8E	653F4584	1062E577F	4C5F92C58E	1	0	0	0	0	00	11	10
361	122	1E2D91C	4A7E8B09	00C5CAEFE	18BF258B1C	1	0	0	1	0	11	00	11
362	123	1C5B238	14FD1613	018B95DFC	317E4B1639	1	1	0	0	1	01	11	00
363	124	18B6471	29FA2C27	03172BBF9	62FC962C72	1	1	0	1	0	01	01	11
364	125	116C8E2	53F4584E	062E577F3	45F92C58E4	0	1	0	1	1	11	01	01

2 FREQUENCY HOPPING SAMPLE DATA

The section contains three sets of sample data showing the basic and adapted hopping schemes for different combinations of addresses and initial clock values.

2.1 FIRST SET

```
Hop sequence {k} for PAGE SCAN/INQUIRY SCAN SUBSTATE:
CLKN start:      0x0000000
UAP / LAP:       0x00000000
#ticks:          0000 | 1000 | 2000 | 3000 | 4000 | 5000 | 6000 | 7000 |
                 ---------------------------------------------------------
0x0000000:          0 |    2 |    4 |    6 |    8 |   10 |   12 |   14 |
0x0008000:         16 |   18 |   20 |   22 |   24 |   26 |   28 |   30 |
0x0010000:         32 |   34 |   36 |   38 |   40 |   42 |   44 |   46 |
0x0018000:         48 |   50 |   52 |   54 |   56 |   58 |   60 |   62 |
0x0020000:          0 |    2 |    4 |    6 |    8 |   10 |   12 |   14 |
0x0028000:         16 |   18 |   20 |   22 |   24 |   26 |   28 |   30 |
0x0030000:         32 |   34 |   36 |   38 |   40 |   42 |   44 |   46 |
0x0038000:         48 |   50 |   52 |   54 |   56 |   58 |   60 |   62 |

Hop sequence {k} for PAGE STATE/INQUIRY SUBSTATE:
CLKE start:      0x0000000
UAP / LAP:       0x00000000
#ticks:          00 01 02 03 | 04 05 06 07 | 08 09 0a 0b | 0c 0d 0e 0f |
                 -----------------------------------------------------------
0x0000000:       48 50 09 13 | 52 54 41 45 | 56 58 11 15 | 60 62 43 47 |
0x0000010:       00 02 64 68 | 04 06 17 21 | 08 10 66 70 | 12 14 19 23 |
0x0000020:       48 50 09 13 | 52 54 41 45 | 56 58 11 15 | 60 62 43 47 |
0x0000030:       00 02 64 68 | 04 06 17 21 | 08 10 66 70 | 12 14 19 23 |
...
0x0001000:       48 18 09 05 | 20 22 33 37 | 24 26 03 07 | 28 30 35 39 |
0x0001010:       32 34 72 76 | 36 38 25 29 | 40 42 74 78 | 44 46 27 31 |
0x0001020:       48 18 09 05 | 20 22 33 37 | 24 26 03 07 | 28 30 35 39 |
0x0001030:       32 34 72 76 | 36 38 25 29 | 40 42 74 78 | 44 46 27 31 |
...
0x0002000:       16 18 01 05 | 52 54 41 45 | 56 58 11 15 | 60 62 43 47 |
0x0002010:       00 02 64 68 | 04 06 17 21 | 08 10 66 70 | 12 14 19 23 |
0x0002020:       16 18 01 05 | 52 54 41 45 | 56 58 11 15 | 60 62 43 47 |
0x0002030:       00 02 64 68 | 04 06 17 21 | 08 10 66 70 | 12 14 19 23 |
...
0x0003000:       48 50 09 13 | 52 22 41 37 | 24 26 03 07 | 28 30 35 39 |
0x0003010:       32 34 72 76 | 36 38 25 29 | 40 42 74 78 | 44 46 27 31 |
0x0003020:       48 50 09 13 | 52 22 41 37 | 24 26 03 07 | 28 30 35 39 |
0x0003030:       32 34 72 76 | 36 38 25 29 | 40 42 74 78 | 44 46 27 31 |

Hop sequence {k} for SLAVE PAGE RESPONSE SUBSTATE:
CLKN* =          0x0000010
UAP / LAP:       0x00000000
#ticks:          00 | 02 04 | 06 08 | 0a 0c | 0e 10 | 12 14 | 16 18 | 1a 1c | 1e
                 ------------------------------------------------------------------
0x0000012:       64 | 02 68 | 04 17 | 06 21 | 08 66 | 10 70 | 12 19 | 14 23 | 16
0x0000032:       01 | 18 05 | 20 33 | 22 37 | 24 03 | 26 07 | 28 35 | 30 39 | 32
0x0000052:       72 | 34 76 | 36 25 | 38 29 | 40 74 | 42 78 | 44 27 | 46 31 | 48
0x0000072:       09 | 50 13 | 52 41 | 54 45 | 56 11 | 58 15 | 60 43 | 62 47 | 00

Hop sequence {k} for MASTER PAGE RESPONSE SUBSTATE:
Offset value:    24
CLKE* =          0x0000012
UAP / LAP:       0x00000000
#ticks:          00 02 | 04 06 | 08 0a | 0c 0e | 10 12 | 14 16 | 18 1a | 1c 1e |
                 ------------------------------------------------------------------
0x0000014:       02 68 | 04 17 | 06 21 | 08 66 | 10 70 | 12 19 | 14 23 | 16 01 |
0x0000034:       18 05 | 20 33 | 22 37 | 24 03 | 26 07 | 28 35 | 30 39 | 32 72 |
0x0000054:       34 76 | 36 25 | 38 29 | 40 74 | 42 78 | 44 27 | 46 31 | 48 09 |
0x0000074:       50 13 | 52 41 | 54 45 | 56 11 | 58 15 | 60 43 | 62 47 | 00 64 |
```

Hop sequence {k} for CONNECTION STATE (Basic channel hopping sequence; ie, non-AFH):
CLK start: 0x0000010
UAP/LAP: 0x00000000

#ticks:	00 02	04 06	08 0a	0c 0e	10 12	14 16	18 1a	1c 1e
0x0000010:	08 66	10 70	12 19	14 23	16 01	18 05	20 33	22 37
0x0000030:	24 03	26 07	28 35	30 39	32 72	34 76	36 25	38 29
0x0000050:	40 74	42 78	44 27	46 31	48 09	50 13	52 41	54 45
0x0000070:	56 11	58 15	60 43	62 47	32 17	36 19	34 49	38 51
0x0000090:	40 21	44 23	42 53	46 55	48 33	52 35	50 65	54 67
0x00000b0:	56 37	60 39	58 69	62 71	64 25	68 27	66 57	70 59
0x00000d0:	72 29	76 31	74 61	78 63	01 41	05 43	03 73	07 75
0x00000f0:	09 45	13 47	11 77	15 00	64 49	66 53	68 02	70 06
0x0000110:	01 51	03 55	05 04	07 08	72 57	74 61	76 10	78 14
0x0000130:	09 59	11 63	13 12	15 16	17 65	19 69	21 18	23 22
0x0000150:	33 67	35 71	37 20	39 24	25 73	27 77	29 26	31 30
0x0000170:	41 75	43 00	45 28	47 32	17 02	21 04	19 34	23 36
0x0000190:	33 06	37 08	35 38	39 40	25 10	29 12	27 42	31 44
0x00001b0:	41 14	45 16	43 46	47 48	49 18	53 20	51 50	55 52
0x00001d0:	65 22	69 24	67 54	71 56	57 26	61 28	59 58	63 60
0x00001f0:	73 30	77 32	75 62	00 64	49 34	51 42	57 66	59 74
0x0000210:	53 36	55 44	61 68	63 76	65 50	67 58	73 03	75 11
0x0000230:	69 52	71 60	77 05	00 13	02 38	04 46	10 70	12 78
0x0000250:	06 40	08 48	14 72	16 01	18 54	20 62	26 07	28 15
0x0000270:	22 56	24 64	30 09	32 17	02 66	06 74	10 19	14 27
0x0000290:	04 70	08 78	12 23	16 31	18 03	22 11	26 35	30 43
0x00002b0:	20 07	24 15	28 39	32 47	34 68	38 76	42 21	46 29
0x00002d0:	36 72	40 01	44 25	48 33	50 05	54 13	58 37	62 45
0x00002f0:	52 09	56 17	60 41	64 49	34 19	36 35	50 51	52 67
0x0000310:	38 21	40 37	54 53	56 69	42 27	44 43	58 59	60 75
0x0000330:	46 29	48 45	62 61	64 77	66 23	68 39	03 55	05 71
0x0000350:	70 25	72 41	07 57	09 73	74 31	76 47	11 63	13 00
0x0000370:	78 33	01 49	15 65	17 02	66 51	70 67	03 04	07 20
0x0000390:	68 55	72 71	05 08	09 24	74 59	78 75	11 12	15 28
0x00003b0:	76 63	01 00	13 16	17 32	19 53	23 69	35 06	39 22
0x00003d0:	21 57	25 73	37 10	41 26	27 61	31 77	43 14	47 30
0x00003f0:	29 65	33 02	45 18	49 34	19 04	21 08	23 20	25 24

Sample Data

Hop Sequence {k} for CONNECTION STATE (Adapted channel hopping sequence with all channel used; ie, AFH(79)):

CLK start: 0x0000010

ULAP: 0x00000000

Used Channels:0x7fffffffffffffffff

#ticks:	00 02	04 06	08 0a	0c 0e	10 12	14 16	18 1a	1c 1e
0x0000010	08 08	10 10	12 12	14 14	16 16	18 18	20 20	22 22
0x0000030	24 24	26 26	28 28	30 30	32 32	34 34	36 36	38 38
0x0000050	40 40	42 42	44 44	46 46	48 48	50 50	52 52	54 54
0x0000070	56 56	58 58	60 60	62 62	32 32	36 36	34 34	38 38
0x0000090	40 40	44 44	42 42	46 46	48 48	52 52	50 50	54 54
0x00000b0	56 56	60 60	58 58	62 62	64 64	68 68	66 66	70 70
0x00000d0	72 72	76 76	74 74	78 78	01 01	05 05	03 03	07 07
0x00000f0	09 09	13 13	11 11	15 15	64 64	66 66	68 68	70 70
0x0000110	01 01	03 03	05 05	07 07	72 72	74 74	76 76	78 78
0x0000130	09 09	11 11	13 13	15 15	17 17	19 19	21 21	23 23
0x0000150	33 33	35 35	37 37	39 39	25 25	27 27	29 29	31 31
0x0000170	41 41	43 43	45 45	47 47	17 17	21 21	19 19	23 23
0x0000190	33 33	37 37	35 35	39 39	25 25	29 29	27 27	31 31
0x00001b0	41 41	45 45	43 43	47 47	49 49	53 53	51 51	55 55
0x00001d0	65 65	69 69	67 67	71 71	57 57	61 61	59 59	63 63
0x00001f0	73 73	77 77	75 75	00 00	49 49	51 51	57 57	59 59
0x0000210	53 53	55 55	61 61	63 63	65 65	67 67	73 73	75 75
0x0000230	69 69	71 71	77 77	00 00	02 02	04 04	10 10	12 12
0x0000250	06 06	08 08	14 14	16 16	18 18	20 20	26 26	28 28
0x0000270	22 22	24 24	30 30	32 32	02 02	06 06	10 10	14 14
0x0000290	04 04	08 08	12 12	16 16	18 18	22 22	26 26	30 30
0x00002b0	20 20	24 24	28 28	32 32	34 34	38 38	42 42	46 46
0x00002d0	36 36	40 40	44 44	48 48	50 50	54 54	58 58	62 62
0x00002f0	52 52	56 56	60 60	64 64	34 34	36 36	50 50	52 52
0x0000310	38 38	40 40	54 54	56 56	42 42	44 44	58 58	60 60
0x0000330	46 46	48 48	62 62	64 64	66 66	68 68	03 03	05 05
0x0000350	70 70	72 72	07 07	09 09	74 74	76 76	11 11	13 13
0x0000370	78 78	01 01	15 15	17 17	66 66	70 70	03 03	07 07
0x0000390	68 68	72 72	05 05	09 09	74 74	78 78	11 11	15 15
0x00003b0	76 76	01 01	13 13	17 17	19 19	23 23	35 35	39 39
0x00003d0	21 21	25 25	37 37	41 41	27 27	31 31	43 43	47 47
0x00003f0	29 29	33 33	45 45	49 49	19 19	21 21	23 23	25 25

Sample Data

Hop Sequence {k} for CONNECTION STATE (Adapted channel hopping sequence with channels 0 to 21 unused):

CLK start: 0x0000010

ULAP: 0x00000000

Used Channels:0x7fffffffffffc00000

#ticks:	00 02	04 06	08 0a	0c 0e	10 12	14 16	18 1a	1c 1e
0x0000010	30 30	32 32	34 34	36 36	38 38	40 40	42 42	22 22
0x0000030	24 24	26 26	28 28	30 30	32 32	34 34	36 36	38 38
0x0000050	40 40	42 42	44 44	46 46	48 48	50 50	52 52	54 54
0x0000070	56 56	58 58	60 60	62 62	32 32	36 36	34 34	38 38
0x0000090	40 40	44 44	42 42	46 46	48 48	52 52	50 50	54 54
0x00000b0	56 56	60 60	58 58	62 62	64 64	68 68	66 66	70 70
0x00000d0	72 72	76 76	74 74	78 78	45 45	49 49	47 47	51 51
0x00000f0	53 53	57 57	55 55	59 59	64 64	66 66	68 68	70 70
0x0000110	45 45	47 47	49 49	51 51	72 72	74 74	76 76	78 78
0x0000130	53 53	55 55	57 57	59 59	61 61	63 63	65 65	23 23
0x0000150	33 33	35 35	37 37	39 39	25 25	27 27	29 29	31 31
0x0000170	41 41	43 43	45 45	47 47	61 61	65 65	63 63	23 23
0x0000190	33 33	37 37	35 35	39 39	25 25	29 29	27 27	31 31
0x00001b0	41 41	45 45	43 43	47 47	49 49	53 53	51 51	55 55
0x00001d0	65 65	69 69	67 67	71 71	57 57	61 61	59 59	63 63
0x00001f0	73 73	77 77	75 75	66 66	49 49	51 51	57 57	59 59
0x0000210	53 53	55 55	61 61	63 63	65 65	67 67	73 73	75 75
0x0000230	69 69	71 71	77 77	66 66	68 68	70 70	76 76	78 78
0x0000250	72 72	74 74	23 23	25 25	27 27	29 29	26 26	28 28
0x0000270	22 22	24 24	30 30	32 32	68 68	72 72	76 76	23 23
0x0000290	70 70	74 74	78 78	25 25	27 27	22 22	26 26	30 30
0x00002b0	29 29	24 24	28 28	32 32	34 34	38 38	42 42	46 46
0x00002d0	36 36	40 40	44 44	48 48	50 50	54 54	58 58	62 62
0x00002f0	52 52	56 56	60 60	64 64	34 34	36 36	50 50	52 52
0x0000310	38 38	40 40	54 54	56 56	42 42	44 44	58 58	60 60
0x0000330	46 46	48 48	62 62	64 64	66 66	68 68	34 34	36 36
0x0000350	70 70	72 72	38 38	40 40	74 74	76 76	42 42	44 44
0x0000370	78 78	32 32	46 46	48 48	66 66	70 70	34 34	38 38
0x0000390	68 68	72 72	36 36	40 40	74 74	78 78	42 42	46 46
0x00003b0	76 76	32 32	44 44	48 48	50 50	23 23	35 35	39 39
0x00003d0	52 52	25 25	37 37	41 41	27 27	31 31	43 43	47 47
0x00003f0	29 29	33 33	45 45	49 49	50 50	52 52	23 23	25 25

Sample Data

Hop Sequence {k} for CONNECTION STATE (Adapted channel hopping sequence with even channels used):

CLK start: 0x0000010

ULAP: 0x00000000

Used Channels:0x55555555555555555

#ticks:	00 02	04 06	08 0a	0c 0e	10 12	14 16	18 1a	1c 1e
0x0000010	08 08	10 10	12 12	14 14	16 16	18 18	20 20	22 22
0x0000030	24 24	26 26	28 28	30 30	32 32	34 34	36 36	38 38
0x0000050	40 40	42 42	44 44	46 46	48 48	50 50	52 52	54 54
0x0000070	56 56	58 58	60 60	62 62	32 32	36 36	34 34	38 38
0x0000090	40 40	44 44	42 42	46 46	48 48	52 52	50 50	54 54
0x00000b0	56 56	60 60	58 58	62 62	64 64	68 68	66 66	70 70
0x00000d0	72 72	76 76	74 74	78 78	00 00	04 04	02 02	06 06
0x00000f0	08 08	12 12	10 10	14 14	64 64	66 66	68 68	70 70
0x0000110	00 00	02 02	04 04	06 06	72 72	74 74	76 76	78 78
0x0000130	08 08	10 10	12 12	14 14	16 16	18 18	20 20	22 22
0x0000150	32 32	34 34	36 36	38 38	24 24	26 26	28 28	30 30
0x0000170	40 40	42 42	44 44	46 46	16 16	20 20	18 18	22 22
0x0000190	32 32	36 36	34 34	38 38	24 24	28 28	26 26	30 30
0x00001b0	40 40	44 44	42 42	46 46	48 48	52 52	50 50	54 54
0x00001d0	64 64	68 68	66 66	70 70	56 56	60 60	58 58	62 62
0x00001f0	72 72	76 76	74 74	00 00	48 48	50 50	56 56	58 58
0x0000210	52 52	54 54	60 60	62 62	64 64	66 66	72 72	74 74
0x0000230	68 68	70 70	76 76	00 00	02 02	04 04	10 10	12 12
0x0000250	06 06	08 08	14 14	16 16	18 18	20 20	26 26	28 28
0x0000270	22 22	24 24	30 30	32 32	02 02	06 06	10 10	14 14
0x0000290	04 04	08 08	12 12	16 16	18 18	22 22	26 26	30 30
0x00002b0	20 20	24 24	28 28	32 32	34 34	38 38	42 42	46 46
0x00002d0	36 36	40 40	44 44	48 48	50 50	54 54	58 58	62 62
0x00002f0	52 52	56 56	60 60	64 64	34 34	36 36	50 50	52 52
0x0000310	38 38	40 40	54 54	56 56	42 42	44 44	58 58	60 60
0x0000330	46 46	48 48	62 62	64 64	66 66	68 68	00 00	02 02
0x0000350	70 70	72 72	04 04	06 06	74 74	76 76	08 08	10 10
0x0000370	78 78	78 78	12 12	14 14	66 66	70 70	00 00	04 04
0x0000390	68 68	72 72	02 02	06 06	74 74	78 78	08 08	12 12
0x00003b0	76 76	78 78	10 10	14 14	16 16	20 20	32 32	36 36
0x00003d0	18 18	22 22	34 34	38 38	24 24	28 28	40 40	44 44
0x00003f0	26 26	30 30	42 42	46 46	16 16	18 18	20 20	22 22

Sample Data

Hop Sequence {k} for CONNECTION STATE (Adapted channel hopping sequence with odd channels used):

CLK start: 0x0000010

ULAP: 0x00000000

Used Channels:0x2aaaaaaaaaaaaaaaaaaa

#ticks:	00 02	04 06	08 0a	0c 0e	10 12	14 16	18 1a	1c 1e
0x0000010	09 09	11 11	13 13	15 15	17 17	19 19	21 21	23 23
0x0000030	25 25	27 27	29 29	31 31	33 33	35 35	37 37	39 39
0x0000050	41 41	43 43	45 45	47 47	49 49	51 51	53 53	55 55
0x0000070	57 57	59 59	61 61	63 63	33 33	37 37	35 35	39 39
0x0000090	41 41	45 45	43 43	47 47	49 49	53 53	51 51	55 55
0x00000b0	57 57	61 61	59 59	63 63	65 65	69 69	67 67	71 71
0x00000d0	73 73	77 77	75 75	01 01	01 01	05 05	03 03	07 07
0x00000f0	09 09	13 13	11 11	15 15	65 65	67 67	69 69	71 71
0x0000110	01 01	03 03	05 05	07 07	73 73	75 75	77 77	01 01
0x0000130	09 09	11 11	13 13	15 15	17 17	19 19	21 21	23 23
0x0000150	33 33	35 35	37 37	39 39	25 25	27 27	29 29	31 31
0x0000170	41 41	43 43	45 45	47 47	17 17	21 21	19 19	23 23
0x0000190	33 33	37 37	35 35	39 39	25 25	29 29	27 27	31 31
0x00001b0	41 41	45 45	43 43	47 47	49 49	53 53	51 51	55 55
0x00001d0	65 65	69 69	67 67	71 71	57 57	61 61	59 59	63 63
0x00001f0	73 73	77 77	75 75	03 03	49 49	51 51	57 57	59 59
0x0000210	53 53	55 55	61 61	63 63	65 65	67 67	73 73	75 75
0x0000230	69 69	71 71	77 77	03 03	05 05	07 07	13 13	15 15
0x0000250	09 09	11 11	17 17	19 19	21 21	23 23	29 29	31 31
0x0000270	25 25	27 27	33 33	35 35	05 05	09 09	13 13	17 17
0x0000290	07 07	11 11	15 15	19 19	21 21	25 25	29 29	33 33
0x00002b0	23 23	27 27	31 31	35 35	37 37	41 41	45 45	49 49
0x00002d0	39 39	43 43	47 47	51 51	53 53	57 57	61 61	65 65
0x00002f0	55 55	59 59	63 63	67 67	37 37	39 39	53 53	55 55
0x0000310	41 41	43 43	57 57	59 59	45 45	47 47	61 61	63 63
0x0000330	49 49	51 51	65 65	67 67	69 69	71 71	03 03	05 05
0x0000350	73 73	75 75	07 07	09 09	77 77	01 01	11 11	13 13
0x0000370	03 03	01 01	15 15	17 17	69 69	73 73	03 03	07 07
0x0000390	71 71	75 75	05 05	09 09	77 77	03 03	11 11	15 15
0x00003b0	01 01	01 01	13 13	17 17	19 19	23 23	35 35	39 39
0x00003d0	21 21	25 25	37 37	41 41	27 27	31 31	43 43	47 47
0x00003f0	29 29	33 33	45 45	49 49	19 19	21 21	23 23	25 25

2.2 SECOND SET

```
Hop sequence {k} for PAGE SCAN/INQUIRY SCAN SUBSTATE:
CLKN start:      0x0000000
ULAP:            0x2a96ef25
#ticks:          0000 | 1000 | 2000 | 3000 | 4000 | 5000 | 6000 | 7000 |
                 -------------------------------------------------------
0x0000000:         49 |   13 |   17 |   51 |   55 |   19 |   23 |   53 |
0x0008000:         57 |   21 |   25 |   27 |   31 |   74 |   78 |   29 |
0x0010000:         33 |   76 |    1 |   35 |   39 |    3 |    7 |   37 |
0x0018000:         41 |    5 |    9 |   43 |   47 |   11 |   15 |   45 |
0x0020000:         49 |   13 |   17 |   51 |   55 |   19 |   23 |   53 |
0x0028000:         57 |   21 |   25 |   27 |   31 |   74 |   78 |   29 |
0x0030000:         33 |   76 |    1 |   35 |   39 |    3 |    7 |   37 |
0x0038000:         41 |    5 |    9 |   43 |   47 |   11 |   15 |   45 |

Hop sequence {k} for PAGE STATE/INQUIRY SUBSTATE:
CLKE start:      0x0000000
ULAP:            0x2a96ef25
#ticks:          00 01 02 03 | 04 05 06 07 | 08 09 0a 0b | 0c 0d 0e 0f |
                 -----------------------------------------------------------
0x0000000:       41 05 10 04 | 09 43 06 16 | 47 11 18 12 | 15 45 14 32 |
0x0000010:       49 13 34 28 | 17 51 30 24 | 55 19 26 20 | 23 53 22 40 |
0x0000020:       41 05 10 04 | 09 43 06 16 | 47 11 18 12 | 15 45 14 32 |
0x0000030:       49 13 34 28 | 17 51 30 24 | 55 19 26 20 | 23 53 22 40 |
...
0x0001000:       41 21 10 36 | 25 27 38 63 | 31 74 65 59 | 78 29 61 00 |
0x0001010:       33 76 02 75 | 01 35 77 71 | 39 03 73 67 | 07 37 69 08 |
0x0001020:       41 21 10 36 | 25 27 38 63 | 31 74 65 59 | 78 29 61 00 |
0x0001030:       33 76 02 75 | 01 35 77 71 | 39 03 73 67 | 07 37 69 08 |
...
0x0002000:       57 21 42 36 | 09 43 06 16 | 47 11 18 12 | 15 45 14 32 |
0x0002010:       49 13 34 28 | 17 51 30 24 | 55 19 26 20 | 23 53 22 40 |
0x0002020:       57 21 42 36 | 09 43 06 16 | 47 11 18 12 | 15 45 14 32 |
0x0002030:       49 13 34 28 | 17 51 30 24 | 55 19 26 20 | 23 53 22 40 |
...
0x0003000:       41 05 10 04 | 09 27 06 63 | 31 74 65 59 | 78 29 61 00 |
0x0003010:       33 76 02 75 | 01 35 77 71 | 39 03 73 67 | 07 37 69 08 |
0x0003020:       41 05 10 04 | 09 27 06 63 | 31 74 65 59 | 78 29 61 00 |
0x0003030:       33 76 02 75 | 01 35 77 71 | 39 03 73 67 | 07 37 69 08 |

Hop sequence {k} for SLAVE PAGE RESPONSE SUBSTATE:
CLKN* =          0x0000010
ULAP:            0x2a96ef25
#ticks:          00 | 02 04 | 06 08 | 0a 0c | 0e 10 | 12 14 | 16 18 | 1a
                 -----------------------------------------------------------
0x0000012:       34 | 13 28 | 17 30 | 51 24 | 55 26 | 19 20 | 23 22 | 53
0x0000032:       42 | 21 36 | 25 38 | 27 63 | 31 65 | 74 59 | 78 61 | 29
0x0000052:       02 | 76 75 | 01 77 | 35 71 | 39 73 | 03 67 | 07 69 | 37
0x0000072:       10 | 05 04 | 09 06 | 43 16 | 47 18 | 11 12 | 15 14 | 45

Hop sequence {k} for MASTER PAGE RESPONSE SUBSTATE:
Offset value:    24
CLKE* =          0x0000012
ULAP:            0x2a96ef25
#ticks:          00 02 | 04 06 | 08 0a | 0c 0e | 10 12 | 14 16 | 18 1a |
                 -----------------------------------------------------------
0x0000014:       13 28 | 17 30 | 51 24 | 55 26 | 19 20 | 23 22 | 53 40 |
0x0000034:       21 36 | 25 38 | 27 63 | 31 65 | 74 59 | 78 61 | 29 00 |
0x0000054:       76 75 | 01 77 | 35 71 | 39 73 | 03 67 | 07 69 | 37 08 |
0x0000074:       05 04 | 09 06 | 43 16 | 47 18 | 11 12 | 15 14 | 45 32 |
```

Hop sequence {k} for CONNECTION STATE (Basic channel hopping sequence; ie, non-AFH):
CLK start: 0x0000010
ULAP: 0x2a96ef25

#ticks:	00 02	04 06	08 0a	0c 0e	10 12	14 16	18 1a	1c 1e
0x0000010:	55 26	19 20	23 22	53 40	57 42	21 36	25 38	27 63
0x0000030:	31 65	74 59	78 61	29 00	33 02	76 75	01 77	35 71
0x0000050:	39 73	03 67	07 69	37 08	41 10	05 04	09 06	43 16
0x0000070:	47 18	11 12	15 14	45 32	02 66	47 60	49 64	04 54
0x0000090:	06 58	51 52	53 56	08 70	10 74	55 68	57 72	59 14
0x00000b0:	61 18	27 12	29 16	63 30	65 34	31 28	33 32	67 22
0x00000d0:	69 26	35 20	37 24	71 38	73 42	39 36	41 40	75 46
0x00000f0:	77 50	43 44	45 48	00 62	26 11	69 05	73 07	36 17
0x0000110:	40 19	04 13	08 15	38 25	42 27	06 21	10 23	12 48
0x0000130:	16 50	59 44	63 46	14 56	18 58	61 52	65 54	28 64
0x0000150:	32 66	75 60	00 62	30 72	34 74	77 68	02 70	20 01
0x0000170:	24 03	67 76	71 78	22 09	58 43	24 37	26 41	68 47
0x0000190:	70 51	36 45	38 49	72 55	74 59	40 53	42 57	44 78
0x00001b0:	46 03	12 76	14 01	48 07	50 11	16 05	18 09	60 15
0x00001d0:	62 19	28 13	30 17	64 23	66 27	32 21	34 25	52 31
0x00001f0:	54 35	20 29	22 33	56 39	19 04	62 63	66 00	07 73
0x0000210:	11 10	54 69	58 06	23 75	27 12	70 71	74 08	76 33
0x0000230:	01 49	44 29	48 45	13 35	17 51	60 31	64 47	05 41
0x0000250:	09 57	52 37	56 53	21 43	25 59	68 39	72 55	78 65
0x0000270:	03 02	46 61	50 77	15 67	51 36	17 18	19 34	41 24
0x0000290:	43 40	09 22	11 38	57 28	59 44	25 26	27 42	29 63
0x00002b0:	31 00	76 61	78 77	45 67	47 04	13 65	15 02	37 71
0x00002d0:	39 08	05 69	07 06	53 75	55 12	21 73	23 10	33 16
0x00002f0:	35 32	01 14	03 30	49 20	75 60	39 48	43 56	00 66
0x0000310:	04 74	47 62	51 70	08 68	12 76	55 64	59 72	61 18
0x0000330:	65 26	29 14	33 22	69 20	73 28	37 16	41 24	77 34
0x0000350:	02 42	45 30	49 38	06 36	10 44	53 32	57 40	63 50
0x0000370:	67 58	31 46	35 54	71 52	28 13	73 03	75 11	34 17
0x0000390:	36 25	02 15	04 23	42 21	44 29	10 19	12 27	14 48
0x00003b0:	16 56	61 46	63 54	22 52	24 60	69 50	71 58	30 64
0x00003d0:	32 72	77 62	00 70	38 68	40 76	06 66	08 74	18 01
0x00003f0:	20 09	65 78	67 07	26 05	44 29	32 23	36 25	70 43

Sample Data

Hop Sequence {k} for CONNECTION STATE (Adapted channel hopping sequence with all channel used; ie, AFH(79)):

CLK start: 0x0000010

ULAP: 0x2a96ef25

Used Channels:0x7fffffffffffffffff

#ticks:	00 02	04 06	08 0a	0c 0e	10 12	14 16	18 1a	1c 1e
0x0000010	55 55	19 19	23 23	53 53	57 57	21 21	25 25	27 27
0x0000030	31 31	74 74	78 78	29 29	33 33	76 76	01 01	35 35
0x0000050	39 39	03 03	07 07	37 37	41 41	05 05	09 09	43 43
0x0000070	47 47	11 11	15 15	45 45	02 02	47 47	49 49	04 04
0x0000090	06 06	51 51	53 53	08 08	10 10	55 55	57 57	59 59
0x00000b0	61 61	27 27	29 29	63 63	65 65	31 31	33 33	67 67
0x00000d0	69 69	35 35	37 37	71 71	73 73	39 39	41 41	75 75
0x00000f0	77 77	43 43	45 45	00 00	26 26	69 69	73 73	36 36
0x0000110	40 40	04 04	08 08	38 38	42 42	06 06	10 10	12 12
0x0000130	16 16	59 59	63 63	14 14	18 18	61 61	65 65	28 28
0x0000150	32 32	75 75	00 00	30 30	34 34	77 77	02 02	20 20
0x0000170	24 24	67 67	71 71	22 22	58 58	24 24	26 26	68 68
0x0000190	70 70	36 36	38 38	72 72	74 74	40 40	42 42	44 44
0x00001b0	46 46	12 12	14 14	48 48	50 50	16 16	18 18	60 60
0x00001d0	62 62	28 28	30 30	64 64	66 66	32 32	34 34	52 52
0x00001f0	54 54	20 20	22 22	56 56	19 19	62 62	66 66	07 07
0x0000210	11 11	54 54	58 58	23 23	27 27	70 70	74 74	76 76
0x0000230	01 01	44 44	48 48	13 13	17 17	60 60	64 64	05 05
0x0000250	09 09	52 52	56 56	21 21	25 25	68 68	72 72	78 78
0x0000270	03 03	46 46	50 50	15 15	51 51	17 17	19 19	41 41
0x0000290	43 43	09 09	11 11	57 57	59 59	25 25	27 27	29 29
0x00002b0	31 31	76 76	78 78	45 45	47 47	13 13	15 15	37 37
0x00002d0	39 39	05 05	07 07	53 53	55 55	21 21	23 23	33 33
0x00002f0	35 35	01 01	03 03	49 49	75 75	39 39	43 43	00 00
0x0000310	04 04	47 47	51 51	08 08	12 12	55 55	59 59	61 61
0x0000330	65 65	29 29	33 33	69 69	73 73	37 37	41 41	77 77
0x0000350	02 02	45 45	49 49	06 06	10 10	53 53	57 57	63 63
0x0000370	67 67	31 31	35 35	71 71	28 28	73 73	75 75	34 34
0x0000390	36 36	02 02	04 04	42 42	44 44	10 10	12 12	14 14
0x00003b0	16 16	61 61	63 63	22 22	24 24	69 69	71 71	30 30
0x00003d0	32 32	77 77	00 00	38 38	40 40	06 06	08 08	18 18
0x00003f0	20 20	65 65	67 67	26 26	44 44	32 32	36 36	70 70

Sample Data

Hop Sequence {k} for CONNECTION STATE (Adapted channel hopping sequence with channels 0 to 21 unused):

CLK start: 0x0000010

ULAP: 0x2a96ef25

Used Channels:0x7fffffffffffc00000

#ticks:	00 02	04 06	08 0a	0c 0e	10 12	14 16	18 1a	1c 1e
0x0000010	55 55	50 50	23 23	53 53	57 57	52 52	25 25	27 27
0x0000030	31 31	74 74	78 78	29 29	33 33	76 76	32 32	35 35
0x0000050	39 39	34 34	38 38	37 37	41 41	36 36	40 40	43 43
0x0000070	47 47	42 42	46 46	45 45	55 55	47 47	49 49	57 57
0x0000090	59 59	51 51	53 53	61 61	63 63	55 55	57 57	59 59
0x00000b0	61 61	27 27	29 29	63 63	65 65	31 31	33 33	67 67
0x00000d0	69 69	35 35	37 37	71 71	73 73	39 39	41 41	75 75
0x00000f0	77 77	43 43	45 45	53 53	26 26	69 69	73 73	36 36
0x0000110	40 40	57 57	61 61	38 38	42 42	59 59	63 63	65 65
0x0000130	69 69	59 59	63 63	67 67	71 71	61 61	65 65	28 28
0x0000150	32 32	75 75	53 53	30 30	34 34	77 77	55 55	73 73
0x0000170	24 24	67 67	71 71	22 22	58 58	24 24	26 26	68 68
0x0000190	70 70	36 36	38 38	72 72	74 74	40 40	42 42	44 44
0x00001b0	46 46	65 65	67 67	48 48	50 50	69 69	71 71	60 60
0x00001d0	62 62	28 28	30 30	64 64	66 66	32 32	34 34	52 52
0x00001f0	54 54	73 73	22 22	56 56	37 37	62 62	66 66	25 25
0x0000210	29 29	54 54	58 58	23 23	27 27	70 70	74 74	76 76
0x0000230	76 76	44 44	48 48	31 31	35 35	60 60	64 64	23 23
0x0000250	27 27	52 52	56 56	39 39	25 25	68 68	72 72	78 78
0x0000270	78 78	46 46	50 50	33 33	51 51	35 35	37 37	41 41
0x0000290	43 43	27 27	29 29	57 57	59 59	25 25	27 27	29 29
0x00002b0	31 31	76 76	78 78	45 45	47 47	31 31	33 33	37 37
0x00002d0	39 39	23 23	25 25	53 53	55 55	39 39	23 23	33 33
0x00002f0	35 35	76 76	78 78	49 49	75 75	39 39	43 43	40 40
0x0000310	44 44	47 47	51 51	48 48	52 52	55 55	59 59	61 61
0x0000330	65 65	29 29	33 33	69 69	73 73	37 37	41 41	77 77
0x0000350	42 42	45 45	49 49	46 46	50 50	53 53	57 57	63 63
0x0000370	67 67	31 31	35 35	71 71	28 28	73 73	75 75	34 34
0x0000390	36 36	42 42	44 44	42 42	44 44	50 50	52 52	54 54
0x00003b0	56 56	61 61	63 63	22 22	24 24	69 69	71 71	30 30
0x00003d0	32 32	77 77	40 40	38 38	40 40	46 46	48 48	58 58
0x00003f0	60 60	65 65	67 67	26 26	44 44	32 32	36 36	70 70

Sample Data

Hop Sequence {k} for CONNECTION STATE (Adapted channel hopping sequence with even channels used):

CLK start: 0x0000010

ULAP: 0x2a96ef25

Used Channels:0x55555555555555555

#ticks:	00 02	04 06	08 0a	0c 0e	10 12	14 16	18 1a	1c 1e
0x0000010	52 52	16 16	20 20	50 50	54 54	18 18	22 22	24 24
0x0000030	28 28	74 74	78 78	26 26	30 30	76 76	78 78	32 32
0x0000050	36 36	00 00	04 04	34 34	38 38	02 02	06 06	40 40
0x0000070	44 44	08 08	12 12	42 42	02 02	44 44	46 46	04 04
0x0000090	06 06	48 48	50 50	08 08	10 10	52 52	54 54	56 56
0x00000b0	58 58	24 24	26 26	60 60	62 62	28 28	30 30	64 64
0x00000d0	66 66	32 32	34 34	68 68	70 70	36 36	38 38	72 72
0x00000f0	74 74	40 40	42 42	00 00	26 26	66 66	70 70	36 36
0x0000110	40 40	04 04	08 08	38 38	42 42	06 06	10 10	12 12
0x0000130	16 16	56 56	60 60	14 14	18 18	58 58	62 62	28 28
0x0000150	32 32	72 72	00 00	30 30	34 34	74 74	02 02	20 20
0x0000170	24 24	64 64	68 68	22 22	58 58	24 24	26 26	68 68
0x0000190	70 70	36 36	38 38	72 72	74 74	40 40	42 42	44 44
0x00001b0	46 46	12 12	14 14	48 48	50 50	16 16	18 18	60 60
0x00001d0	62 62	28 28	30 30	64 64	66 66	32 32	34 34	52 52
0x00001f0	54 54	20 20	22 22	56 56	14 14	62 62	66 66	02 02
0x0000210	06 06	54 54	58 58	18 18	22 22	70 70	74 74	76 76
0x0000230	76 76	44 44	48 48	08 08	12 12	60 60	64 64	00 00
0x0000250	04 04	52 52	56 56	16 16	20 20	68 68	72 72	78 78
0x0000270	78 78	46 46	50 50	10 10	46 46	12 12	14 14	36 36
0x0000290	38 38	04 04	06 06	52 52	54 54	20 20	22 22	24 24
0x00002b0	26 26	76 76	78 78	40 40	42 42	08 08	10 10	32 32
0x00002d0	34 34	00 00	02 02	48 48	50 50	16 16	18 18	28 28
0x00002f0	30 30	76 76	78 78	44 44	70 70	34 34	38 38	00 00
0x0000310	04 04	42 42	46 46	08 08	12 12	50 50	54 54	56 56
0x0000330	60 60	24 24	28 28	64 64	68 68	32 32	36 36	72 72
0x0000350	02 02	40 40	44 44	06 06	10 10	48 48	52 52	58 58
0x0000370	62 62	26 26	30 30	66 66	28 28	68 68	70 70	34 34
0x0000390	36 36	02 02	04 04	42 42	44 44	10 10	12 12	14 14
0x00003b0	16 16	56 56	58 58	22 22	24 24	64 64	66 66	30 30
0x00003d0	32 32	72 72	00 00	38 38	40 40	06 06	08 08	18 18
0x00003f0	20 20	60 60	62 62	26 26	44 44	32 32	36 36	70 70

Sample Data

Hop Sequence {k} for CONNECTION STATE (Adapted channel hopping sequence with odd channels used):

CLK start: 0x0000010

ULAP: 0x2a96ef25

Used Channels:0x2aaaaaaaaaaaaaaaaaaa

#ticks:	00 02	04 06	08 0a	0c 0e	10 12	14 16	18 1a	1c 1e
0x0000010	55 55	19 19	23 23	53 53	57 57	21 21	25 25	27 27
0x0000030	31 31	77 77	03 03	29 29	33 33	01 01	01 01	35 35
0x0000050	39 39	03 03	07 07	37 37	41 41	05 05	09 09	43 43
0x0000070	47 47	11 11	15 15	45 45	07 07	47 47	49 49	09 09
0x0000090	11 11	51 51	53 53	13 13	15 15	55 55	57 57	59 59
0x00000b0	61 61	27 27	29 29	63 63	65 65	31 31	33 33	67 67
0x00000d0	69 69	35 35	37 37	71 71	73 73	39 39	41 41	75 75
0x00000f0	77 77	43 43	45 45	05 05	31 31	69 69	73 73	41 41
0x0000110	45 45	09 09	13 13	43 43	47 47	11 11	15 15	17 17
0x0000130	21 21	59 59	63 63	19 19	23 23	61 61	65 65	33 33
0x0000150	37 37	75 75	05 05	35 35	39 39	77 77	07 07	25 25
0x0000170	29 29	67 67	71 71	27 27	63 63	29 29	31 31	73 73
0x0000190	75 75	41 41	43 43	77 77	01 01	45 45	47 47	49 49
0x00001b0	51 51	17 17	19 19	53 53	55 55	21 21	23 23	65 65
0x00001d0	67 67	33 33	35 35	69 69	71 71	37 37	39 39	57 57
0x00001f0	59 59	25 25	27 27	61 61	19 19	67 67	71 71	07 07
0x0000210	11 11	59 59	63 63	23 23	27 27	75 75	01 01	03 03
0x0000230	01 01	49 49	53 53	13 13	17 17	65 65	69 69	05 05
0x0000250	09 09	57 57	61 61	21 21	25 25	73 73	77 77	05 05
0x0000270	03 03	51 51	55 55	15 15	51 51	17 17	19 19	41 41
0x0000290	43 43	09 09	11 11	57 57	59 59	25 25	27 27	29 29
0x00002b0	31 31	03 03	05 05	45 45	47 47	13 13	15 15	37 37
0x00002d0	39 39	05 05	07 07	53 53	55 55	21 21	23 23	33 33
0x00002f0	35 35	01 01	03 03	49 49	75 75	39 39	43 43	07 07
0x0000310	11 11	47 47	51 51	15 15	19 19	55 55	59 59	61 61
0x0000330	65 65	29 29	33 33	69 69	73 73	37 37	41 41	77 77
0x0000350	09 09	45 45	49 49	13 13	17 17	53 53	57 57	63 63
0x0000370	67 67	31 31	35 35	71 71	35 35	73 73	75 75	41 41
0x0000390	43 43	09 09	11 11	49 49	51 51	17 17	19 19	21 21
0x00003b0	23 23	61 61	63 63	29 29	31 31	69 69	71 71	37 37
0x00003d0	39 39	77 77	07 07	45 45	47 47	13 13	15 15	25 25
0x00003f0	27 27	65 65	67 67	33 33	51 51	39 39	43 43	77 77

2.3 THIRD SET

```
Hop sequence {k} for PAGE SCAN/INQUIRY SCAN SUBSTATE:
CLKN start:     0x0000000
ULAP:           0x6587cba9
#ticks:         0000 | 1000 | 2000 | 3000 | 4000 | 5000 | 6000 | 7000 |
                -----------------------------------------------------
0x0000000:        16 |   65 |   67 |   18 |   20 |   53 |   55 |    6 |
0x0008000:         8 |   57 |   59 |   10 |   12 |   69 |   71 |   22 |
0x0010000:        24 |   73 |   75 |   26 |   28 |   45 |   47 |   77 |
0x0018000:         0 |   49 |   51 |    2 |    4 |   61 |   63 |   14 |
0x0020000:        16 |   65 |   67 |   18 |   20 |   53 |   55 |    6 |
0x0028000:         8 |   57 |   59 |   10 |   12 |   69 |   71 |   22 |
0x0030000:        24 |   73 |   75 |   26 |   28 |   45 |   47 |   77 |
0x0038000:         0 |   49 |   51 |    2 |    4 |   61 |   63 |   14 |

Hop sequence {k} for PAGE STATE/INQUIRY SUBSTATE:
CLKE start:     0x0000000
ULAP:           0x6587cba9
#ticks:         00 01 02 03 | 04 05 06 07 | 08 09 0a 0b | 0c 0d 0e 0f |
                -----------------------------------------------------
0x0000000:      00 49 36 38 | 51 02 42 40 | 04 61 44 46 | 63 14 50 48 |
0x0000010:      16 65 52 54 | 67 18 58 56 | 20 53 60 62 | 55 06 66 64 |
0x0000020:      00 49 36 38 | 51 02 42 40 | 04 61 44 46 | 63 14 50 48 |
0x0000030:      16 65 52 54 | 67 18 58 56 | 20 53 60 62 | 55 06 66 64 |
...
0x0001000:      00 57 36 70 | 59 10 74 72 | 12 69 76 78 | 71 22 03 01 |
0x0001010:      24 73 05 07 | 75 26 11 09 | 28 45 13 30 | 47 77 34 32 |
0x0001020:      00 57 36 70 | 59 10 74 72 | 12 69 76 78 | 71 22 03 01 |
0x0001030:      24 73 05 07 | 75 26 11 09 | 28 45 13 30 | 47 77 34 32 |
...
0x0002000:      08 57 68 70 | 51 02 42 40 | 04 61 44 46 | 63 14 50 48 |
0x0002010:      16 65 52 54 | 67 18 58 56 | 20 53 60 62 | 55 06 66 64 |
0x0002020:      08 57 68 70 | 51 02 42 40 | 04 61 44 46 | 63 14 50 48 |
0x0002030:      16 65 52 54 | 67 18 58 56 | 20 53 60 62 | 55 06 66 64 |
...
0x0003000:      00 49 36 38 | 51 10 42 72 | 12 69 76 78 | 71 22 03 01 |
0x0003010:      24 73 05 07 | 75 26 11 09 | 28 45 13 30 | 47 77 34 32 |
0x0003020:      00 49 36 38 | 51 10 42 72 | 12 69 76 78 | 71 22 03 01 |
0x0003030:      24 73 05 07 | 75 26 11 09 | 28 45 13 30 | 47 77 34 32 |

Hop sequence {k} for SLAVE PAGE RESPONSE SUBSTATE:
CLKN* =         0x0000010
ULAP:           0x6587cba9
#ticks:         00 | 02 04 | 06 08 | 0a 0c | 0e 10 | 12 14 | 16 18 | 1a 1c | 1e
                -----------------------------------------------------------------
0x0000012:      52 | 65 54 | 67 58 | 18 56 | 20 60 | 53 62 | 55 66 | 06 64 | 08
0x0000032:      68 | 57 70 | 59 74 | 10 72 | 12 76 | 69 78 | 71 03 | 22 01 | 24
0x0000052:      05 | 73 07 | 75 11 | 26 09 | 28 13 | 45 30 | 47 34 | 77 32 | 00
0x0000072:      36 | 49 38 | 51 42 | 02 40 | 04 44 | 61 46 | 63 50 | 14 48 | 16

Hop sequence {k} for MASTER PAGE RESPONSE SUBSTATE:
Offset value:   24
CLKE* =         0x0000012
ULAP:           0x6587cba9
#ticks:         00 02 | 04 06 | 08 0a | 0c 0e | 10 12 | 14 16 | 18 1a | 1c 1e |
                -----------------------------------------------------------------
0x0000014:      65 54 | 67 58 | 18 56 | 20 60 | 53 62 | 55 66 | 06 64 | 08 68 |
0x0000034:      57 70 | 59 74 | 10 72 | 12 76 | 69 78 | 71 03 | 22 01 | 24 05 |
0x0000054:      73 07 | 75 11 | 26 09 | 28 13 | 45 30 | 47 34 | 77 32 | 00 36 |
0x0000074:      49 38 | 51 42 | 02 40 | 04 44 | 61 46 | 63 50 | 14 48 | 16 52 |
                                    Page 1
```

Hop sequence {k} for CONNECTION STATE (Basic channel hopping sequence; ie, non-AFH):
CLK start: 0x0000010
ULAP: 0x6587cba9

#ticks:	00 02	04 06	08 0a	0c 0e	10 12	14 16	18 1a	1c 1e
0x0000010:	20 60	53 62	55 66	06 64	08 68	57 70	59 74	10 72
0x0000030:	12 76	69 78	71 03	22 01	24 05	73 07	75 11	26 09
0x0000050:	28 13	45 30	47 34	77 32	00 36	49 38	51 42	02 40
0x0000070:	04 44	61 46	63 50	14 48	50 05	16 07	20 09	48 11
0x0000090:	52 13	06 15	10 17	38 19	42 21	08 23	12 25	40 27
0x00000b0:	44 29	22 31	26 33	54 35	58 37	24 39	28 41	56 43
0x00000d0:	60 45	77 62	02 64	30 66	34 68	00 70	04 72	32 74
0x00000f0:	36 76	14 78	18 01	46 03	72 29	42 39	44 43	74 41
0x0000110:	76 45	46 47	48 51	78 49	01 53	50 63	52 67	03 65
0x0000130:	05 69	54 55	56 59	07 57	09 61	58 71	60 75	11 73
0x0000150:	13 77	30 15	32 19	62 17	64 21	34 31	36 35	66 33
0x0000170:	68 37	38 23	40 27	70 25	27 61	72 71	76 73	25 75
0x0000190:	29 77	78 00	03 02	31 04	35 06	01 16	05 18	33 20
0x00001b0:	37 22	07 08	11 10	39 12	43 14	09 24	13 26	41 28
0x00001d0:	45 30	62 47	66 49	15 51	19 53	64 63	68 65	17 67
0x00001f0:	21 69	70 55	74 57	23 59	53 22	35 12	37 28	67 14
0x0000210:	69 30	23 32	25 48	55 34	57 50	39 40	41 56	71 42
0x0000230:	73 58	27 36	29 52	59 38	61 54	43 44	45 60	75 46
0x0000250:	77 62	15 00	17 16	47 02	49 18	31 08	33 24	63 10
0x0000270:	65 26	19 04	21 20	51 06	06 54	65 42	69 58	18 46
0x0000290:	22 62	55 64	59 01	08 68	12 05	71 72	75 09	24 76
0x00002b0:	28 13	57 66	61 03	10 70	14 07	73 74	77 11	26 78
0x00002d0:	30 15	47 32	51 48	00 36	04 52	63 40	67 56	16 44
0x00002f0:	20 60	49 34	53 50	02 38	38 78	12 05	14 13	44 07
0x0000310:	46 15	16 17	18 25	48 19	50 27	24 33	26 41	56 35
0x0000330:	58 43	20 21	22 29	52 23	54 31	28 37	30 45	60 39
0x0000350:	62 47	00 64	02 72	32 66	34 74	08 01	10 09	40 03
0x0000370:	42 11	04 68	06 76	36 70	70 31	42 35	46 43	74 39
0x0000390:	78 47	48 49	52 57	01 53	05 61	56 65	60 73	09 69
0x00003b0:	13 77	50 51	54 59	03 55	07 63	58 67	62 75	11 71
0x00003d0:	15 00	32 17	36 25	64 21	68 29	40 33	44 41	72 37
0x00003f0:	76 45	34 19	38 27	66 23	11 71	05 18	07 22	13 20

Sample Data

Hop Sequence {k} for CONNECTION STATE (Adapted channel hopping sequence with all channel used; ie, AFH(79)):

CLK start: 0x0000010

ULAP: 0x6587cba9

Used Channels:0x7fffffffffffffffff

#ticks:	00 02	04 06	08 0a	0c 0e	10 12	14 16	18 1a	1c 1e
0x0000010	20 20	53 53	55 55	06 06	08 08	57 57	59 59	10 10
0x0000030	12 12	69 69	71 71	22 22	24 24	73 73	75 75	26 26
0x0000050	28 28	45 45	47 47	77 77	00 00	49 49	51 51	02 02
0x0000070	04 04	61 61	63 63	14 14	50 50	16 16	20 20	48 48
0x0000090	52 52	06 06	10 10	38 38	42 42	08 08	12 12	40 40
0x00000b0	44 44	22 22	26 26	54 54	58 58	24 24	28 28	56 56
0x00000d0	60 60	77 77	02 02	30 30	34 34	00 00	04 04	32 32
0x00000f0	36 36	14 14	18 18	46 46	72 72	42 42	44 44	74 74
0x0000110	76 76	46 46	48 48	78 78	01 01	50 50	52 52	03 03
0x0000130	05 05	54 54	56 56	07 07	09 09	58 58	60 60	11 11
0x0000150	13 13	30 30	32 32	62 62	64 64	34 34	36 36	66 66
0x0000170	68 68	38 38	40 40	70 70	27 27	72 72	76 76	25 25
0x0000190	29 29	78 78	03 03	31 31	35 35	01 01	05 05	33 33
0x00001b0	37 37	07 07	11 11	39 39	43 43	09 09	13 13	41 41
0x00001d0	45 45	62 62	66 66	15 15	19 19	64 64	68 68	17 17
0x00001f0	21 21	70 70	74 74	23 23	53 53	35 35	37 37	67 67
0x0000210	69 69	23 23	25 25	55 55	57 57	39 39	41 41	71 71
0x0000230	73 73	27 27	29 29	59 59	61 61	43 43	45 45	75 75
0x0000250	77 77	15 15	17 17	47 47	49 49	31 31	33 33	63 63
0x0000270	65 65	19 19	21 21	51 51	06 06	65 65	69 69	18 18
0x0000290	22 22	55 55	59 59	08 08	12 12	71 71	75 75	24 24
0x00002b0	28 28	57 57	61 61	10 10	14 14	73 73	77 77	26 26
0x00002d0	30 30	47 47	51 51	00 00	04 04	63 63	67 67	16 16
0x00002f0	20 20	49 49	53 53	02 02	38 38	12 12	14 14	44 44
0x0000310	46 46	16 16	18 18	48 48	50 50	24 24	26 26	56 56
0x0000330	58 58	20 20	22 22	52 52	54 54	28 28	30 30	60 60
0x0000350	62 62	00 00	02 02	32 32	34 34	08 08	10 10	40 40
0x0000370	42 42	04 04	06 06	36 36	70 70	42 42	46 46	74 74
0x0000390	78 78	48 48	52 52	01 01	05 05	56 56	60 60	09 09
0x00003b0	13 13	50 50	54 54	03 03	07 07	58 58	62 62	11 11
0x00003d0	15 15	32 32	36 36	64 64	68 68	40 40	44 44	72 72
0x00003f0	76 76	34 34	38 38	66 66	11 11	05 05	07 07	13 13

Sample Data

Hop Sequence {k} for CONNECTION STATE (Adapted channel hopping sequence with channels 0 to 21 unused):

CLK start: 0x0000010

ULAP: 0x6587cba9

Used Channels:0x7fffffffffffc00000

#ticks:	00 02	04 06	08 0a	0c 0e	10 12	14 16	18 1a	1c 1e
0x0000010	29 29	53 53	55 55	72 72	74 74	57 57	59 59	76 76
0x0000030	78 78	69 69	71 71	22 22	24 24	73 73	75 75	26 26
0x0000050	28 28	45 45	47 47	77 77	66 66	49 49	51 51	68 68
0x0000070	70 70	61 61	63 63	23 23	50 50	25 25	29 29	48 48
0x0000090	52 52	72 72	76 76	38 38	42 42	74 74	78 78	40 40
0x00000b0	44 44	22 22	26 26	54 54	58 58	24 24	28 28	56 56
0x00000d0	60 60	77 77	68 68	30 30	34 34	66 66	70 70	32 32
0x00000f0	36 36	23 23	27 27	46 46	72 72	42 42	44 44	74 74
0x0000110	76 76	46 46	48 48	78 78	32 32	50 50	52 52	34 34
0x0000130	36 36	54 54	56 56	38 38	40 40	58 58	60 60	42 42
0x0000150	44 44	30 30	32 32	62 62	64 64	34 34	36 36	66 66
0x0000170	68 68	38 38	40 40	70 70	27 27	72 72	76 76	25 25
0x0000190	29 29	78 78	34 34	31 31	35 35	32 32	36 36	33 33
0x00001b0	37 37	38 38	42 42	39 39	43 43	40 40	44 44	41 41
0x00001d0	45 45	62 62	66 66	46 46	50 50	64 64	68 68	48 48
0x00001f0	52 52	70 70	74 74	23 23	53 53	35 35	37 37	67 67
0x0000210	69 69	23 23	25 25	55 55	57 57	39 39	41 41	71 71
0x0000230	73 73	27 27	29 29	59 59	61 61	43 43	45 45	75 75
0x0000250	77 77	46 46	48 48	47 47	49 49	31 31	33 33	63 63
0x0000270	65 65	50 50	52 52	51 51	59 59	65 65	69 69	71 71
0x0000290	22 22	55 55	59 59	61 61	65 65	71 71	75 75	24 24
0x00002b0	28 28	57 57	61 61	63 63	67 67	73 73	77 77	26 26
0x00002d0	30 30	47 47	51 51	53 53	57 57	63 63	67 67	69 69
0x00002f0	73 73	49 49	53 53	55 55	38 38	65 65	67 67	44 44
0x0000310	46 46	69 69	71 71	48 48	50 50	24 24	26 26	56 56
0x0000330	58 58	73 73	22 22	52 52	54 54	28 28	30 30	60 60
0x0000350	62 62	53 53	55 55	32 32	34 34	61 61	63 63	40 40
0x0000370	42 42	57 57	59 59	36 36	70 70	42 42	46 46	74 74
0x0000390	78 78	48 48	52 52	76 76	23 23	56 56	60 60	27 27
0x00003b0	31 31	50 50	54 54	78 78	25 25	58 58	62 62	29 29
0x00003d0	33 33	32 32	36 36	64 64	68 68	40 40	44 44	72 72
0x00003f0	76 76	34 34	38 38	66 66	29 29	23 23	25 25	31 31

Sample Data

Hop Sequence {k} for CONNECTION STATE (Adapted channel hopping sequence with even channels used):

CLK start: 0x0000010

ULAP: 0x6587cba9

Used Channels:0x55555555555555555

#ticks:	00 02	04 06	08 0a	0c 0e	10 12	14 16	18 1a	1c 1e
0x0000010	20 20	52 52	54 54	06 06	08 08	56 56	58 58	10 10
0x0000030	12 12	68 68	70 70	22 22	24 24	72 72	74 74	26 26
0x0000050	28 28	44 44	46 46	76 76	00 00	48 48	50 50	02 02
0x0000070	04 04	60 60	62 62	14 14	50 50	16 16	20 20	48 48
0x0000090	52 52	06 06	10 10	38 38	42 42	08 08	12 12	40 40
0x00000b0	44 44	22 22	26 26	54 54	58 58	24 24	28 28	56 56
0x00000d0	60 60	76 76	02 02	30 30	34 34	00 00	04 04	32 32
0x00000f0	36 36	14 14	18 18	46 46	72 72	42 42	44 44	74 74
0x0000110	76 76	46 46	48 48	78 78	78 78	50 50	52 52	00 00
0x0000130	02 02	54 54	56 56	04 04	06 06	58 58	60 60	08 08
0x0000150	10 10	30 30	32 32	62 62	64 64	34 34	36 36	66 66
0x0000170	68 68	38 38	40 40	70 70	24 24	72 72	76 76	22 22
0x0000190	26 26	78 78	00 00	28 28	32 32	78 78	02 02	30 30
0x00001b0	34 34	04 04	08 08	36 36	40 40	06 06	10 10	38 38
0x00001d0	42 42	62 62	66 66	12 12	16 16	64 64	68 68	14 14
0x00001f0	18 18	70 70	74 74	20 20	50 50	32 32	34 34	64 64
0x0000210	66 66	20 20	22 22	52 52	54 54	36 36	38 38	68 68
0x0000230	70 70	24 24	26 26	56 56	58 58	40 40	42 42	72 72
0x0000250	74 74	12 12	14 14	44 44	46 46	28 28	30 30	60 60
0x0000270	62 62	16 16	18 18	48 48	06 06	62 62	66 66	18 18
0x0000290	22 22	52 52	56 56	08 08	12 12	68 68	72 72	24 24
0x00002b0	28 28	54 54	58 58	10 10	14 14	70 70	74 74	26 26
0x00002d0	30 30	44 44	48 48	00 00	04 04	60 60	64 64	16 16
0x00002f0	20 20	46 46	50 50	02 02	38 38	12 12	14 14	44 44
0x0000310	46 46	16 16	18 18	48 48	50 50	24 24	26 26	56 56
0x0000330	58 58	20 20	22 22	52 52	54 54	28 28	30 30	60 60
0x0000350	62 62	00 00	02 02	32 32	34 34	08 08	10 10	40 40
0x0000370	42 42	04 04	06 06	36 36	70 70	42 42	46 46	74 74
0x0000390	78 78	48 48	52 52	76 76	00 00	56 56	60 60	04 04
0x00003b0	08 08	50 50	54 54	78 78	02 02	58 58	62 62	06 06
0x00003d0	10 10	32 32	36 36	64 64	68 68	40 40	44 44	72 72
0x00003f0	76 76	34 34	38 38	66 66	06 06	00 00	02 02	08 08

Sample Data

Hop Sequence {k} for CONNECTION STATE (Adapted channel hopping sequence with odd channels used):

CLK start: 0x0000010

ULAP: 0x6587cba9

Used Channels:0x2aaaaaaaaaaaaaaaaaaa

#ticks:	00 02	04 06	08 0a	0c 0e	10 12	14 16	18 1a	1c 1e
0x0000010	23 23	53 53	55 55	09 09	11 11	57 57	59 59	13 13
0x0000030	15 15	69 69	71 71	25 25	27 27	73 73	75 75	29 29
0x0000050	31 31	45 45	47 47	77 77	03 03	49 49	51 51	05 05
0x0000070	07 07	61 61	63 63	17 17	53 53	19 19	23 23	51 51
0x0000090	55 55	09 09	13 13	41 41	45 45	11 11	15 15	43 43
0x00000b0	47 47	25 25	29 29	57 57	61 61	27 27	31 31	59 59
0x00000d0	63 63	77 77	05 05	33 33	37 37	03 03	07 07	35 35
0x00000f0	39 39	17 17	21 21	49 49	75 75	45 45	47 47	77 77
0x0000110	01 01	49 49	51 51	03 03	01 01	53 53	55 55	03 03
0x0000130	05 05	57 57	59 59	07 07	09 09	61 61	63 63	11 11
0x0000150	13 13	33 33	35 35	65 65	67 67	37 37	39 39	69 69
0x0000170	71 71	41 41	43 43	73 73	27 27	75 75	01 01	25 25
0x0000190	29 29	03 03	03 03	31 31	35 35	01 01	05 05	33 33
0x00001b0	37 37	07 07	11 11	39 39	43 43	09 09	13 13	41 41
0x00001d0	45 45	65 65	69 69	15 15	19 19	67 67	71 71	17 17
0x00001f0	21 21	73 73	77 77	23 23	53 53	35 35	37 37	67 67
0x0000210	69 69	23 23	25 25	55 55	57 57	39 39	41 41	71 71
0x0000230	73 73	27 27	29 29	59 59	61 61	43 43	45 45	75 75
0x0000250	77 77	15 15	17 17	47 47	49 49	31 31	33 33	63 63
0x0000270	65 65	19 19	21 21	51 51	11 11	65 65	69 69	23 23
0x0000290	27 27	55 55	59 59	13 13	17 17	71 71	75 75	29 29
0x00002b0	33 33	57 57	61 61	15 15	19 19	73 73	77 77	31 31
0x00002d0	35 35	47 47	51 51	05 05	09 09	63 63	67 67	21 21
0x00002f0	25 25	49 49	53 53	07 07	43 43	17 17	19 19	49 49
0x0000310	51 51	21 21	23 23	53 53	55 55	29 29	31 31	61 61
0x0000330	63 63	25 25	27 27	57 57	59 59	33 33	35 35	65 65
0x0000350	67 67	05 05	07 07	37 37	39 39	13 13	15 15	45 45
0x0000370	47 47	09 09	11 11	41 41	75 75	47 47	51 51	01 01
0x0000390	05 05	53 53	57 57	01 01	05 05	61 61	65 65	09 09
0x00003b0	13 13	55 55	59 59	03 03	07 07	63 63	67 67	11 11
0x00003d0	15 15	37 37	41 41	69 69	73 73	45 45	49 49	77 77
0x00003f0	03 03	39 39	43 43	71 71	11 11	05 05	07 07	13 13

3 ACCESS CODE SAMPLE DATA

Different access codes (GIAC, DIACs, others...)

LAP with LSB as rightmost bit.

```
                  Bit transmit order on air
                ---------------------------------->
LAP:        | Preamble:| Sync word:      | Trailer: |
-----------------------------------------------------
000000      |   5    | 7e7041e3 4000000d |    5     |
ffffff      |   a    | e758b522 7ffffff2 |    a     |
9e8b33      |   5    | 475c58cc 73345e72 |    a     |
9e8b34      |   5    | 28ed3c34 cb345e72 |    a     |
9e8b36      |   5    | 62337b64 1b345e72 |    a     |
9e8b39      |   a    | c05747b9 e7345e72 |    a     |
9e8b3d      |   5    | 7084eab0 2f345e72 |    a     |
9e8b42      |   5    | 64c86d2b 90b45e72 |    a     |
9e8b48      |   a    | e3c3725e 04b45e72 |    a     |
9e8b4f      |   a    | 8c7216a6 bcb45e72 |    a     |
9e8b57      |   a    | b2f16c30 fab45e72 |    a     |
9e8b60      |   5    | 57bd3b22 c1b45e72 |    a     |
9e8b6a      |   a    | d0b62457 55b45e72 |    a     |
9e8b75      |   a    | 81843a39 abb45e72 |    a     |
9e8b81      |   5    | 0ca96681 e0745e72 |    a     |
9e8b8e      |   a    | aecd5a5c 1c745e72 |    a     |
9e8b9c      |   5    | 17453fbf ce745e72 |    a     |
9e8bab      |   a    | f20968ad f5745e72 |    a     |
9e8bbb      |   5    | 015f4a1e f7745e72 |    a     |
9e8bcc      |   a    | d8c695a0 0cf45e72 |    a     |
9e8bde      |   5    | 614ef043 def45e72 |    a     |
9e8bf1      |   a    | ba81ddc7 a3f45e72 |    a     |
9e8c05      |   5    | 64a7dc4f 680c5e72 |    a     |
9e8c1a      |   5    | 3595c221 960c5e72 |    a     |
9e8c30      |   a    | cb35cc0d 830c5e72 |    a     |
9e8c47      |   5    | 12ac13b3 788c5e72 |    a     |
9e8c5f      |   5    | 2c2f6925 3e8c5e72 |    a     |
9e8c78      |   5    | 3a351c84 078c5e72 |    a     |
9e8c92      |   5    | 7396d0f3 124c5e72 |    a     |
9e8cad      |   5    | 5b0fdfc4 6d4c5e72 |    a     |
9e8cc9      |   a    | aea2eb38 e4cc5e72 |    a     |
9e8ce6      |   5    | 756dc6bc 99cc5e72 |    a     |
9e8d04      |   5    | 214cf934 882c5e72 |    a     |
9e8d23      |   5    | 37568c95 b12c5e72 |    a     |
9e8d43      |   5    | 72281560 f0ac5e72 |    a     |
9e8d64      |   5    | 643260c1 c9ac5e72 |    a     |
9e8d86      |   a    | e044f493 986c5e72 |    a     |
9e8da9      |   5    | 3b8bd917 e56c5e72 |    a     |
9e8dcd      |   a    | ce26edeb 6cec5e72 |    a     |
9e8df2      |   a    | e6bfe2dc 13ec5e72 |    a     |
9e8e18      |   a    | 82dcde3d c61c5e72 |    a     |
9e8e3f      |   a    | 94c6ab9c ff1c5e72 |    a     |
```

Sample Data

9e8e67	a	969059a6 799c5e72	a
9e8e90	a	c4dfccef 425c5e72	a
9e8eba	5	3a7fc2c3 575c5e72	a
9e8ee5	5	57985401 69dc5e72	a
9e8f11	5	0ae2a363 623c5e72	a
9e8f3e	a	d12d8ee7 1f3c5e72	a
9e8f6c	5	547063a8 0dbc5e72	a
9e8f9b	5	063ff6e1 367c5e72	a
9e8fcb	a	c9bc5cfe f4fc5e72	a
9e8ffc	5	2cf00bec cffc5e72	a
9e902e	a	8ec5052f 5d025e72	a
9e9061	5	1074b15e 61825e72	a
9e9095	a	9d59ede6 2a425e72	a
9e90ca	a	f0be7b24 14c25e72	a
9e9100	5	10e10dd0 c0225e72	a
9e9137	a	f5ad5ac2 fb225e72	a
9e916f	a	f7fba8f8 7da25e72	a
9e91a8	5	2f490e5b c5625e72	a
9e91e2	a	94979982 91e25e72	a
9e921d	5	26cda478 2e125e72	a
9e9259	a	aacb81dd 26925e72	a
9e9296	a	bfac7f5b da525e72	a
9e92d4	a	c9a7b0a7 cad25e72	a
9e9313	a	c142bdde 32325e72	a
616cec	5	586a491f 0dcda18d	5
616ceb	5	37db2de7 b5cda18d	5
616ce9	5	7d056ab7 65cda18d	5
616ce6	a	df61566a 99cda18d	5
616ce2	5	6fb2fb63 51cda18d	5
616cdd	5	472bf454 2ecda18d	5
616cd7	a	c020eb21 bacda18d	5
616cd0	a	af918fd9 02cda18d	5
616cc8	a	9112f54f 44cda18d	5
616cbf	5	488b2af1 bf4da18d	5
616cb5	a	cf803584 2b4da18d	5
616caa	a	9eb22bea d54da18d	5
616c9e	a	a49cb509 9e4da18d	5
616c91	5	06f889d4 624da18d	5
616c83	a	bf70ec37 b04da18d	5
616c74	a	ed3f797e 8b8da18d	5
616c64	5	1e695bcd 898da18d	5
616c53	a	fb250cdf b28da18d	5
616c41	5	42ad693c 608da18d	5
616c2e	a	a5b7cc14 dd0da18d	5
616c1a	a	9f9952f7 960da18d	5
616c05	a	ceab4c99 680da18d	5
616bef	a	d403ddde fdf5a18d	5
616bd8	5	314f8acc c6f5a18d	5
616bc0	5	0fccf05a 80f5a18d	5
616ba7	5	25030d57 7975a18d	5
616b8d	a	dba3037b 6c75a18d	5
616b72	5	4439ce17 13b5a18d	5

Sample Data

616b56	a	8d417247 5ab5a18d	5
616b39	5	6a5bd76f e735a18d	5
616b1b	5	592e8166 b635a18d	5
616afc	5	28609d46 cfd5a18d	5
616adc	5	51cb8c1f 4ed5a18d	5
616abb	5	7b047112 b755a18d	5
616a99	5	4871271b e655a18d	5
616a76	5	24bdc8c4 9b95a18d	5
616a52	a	edc57494 d295a18d	5
616a2d	a	f989f30f 6d15a18d	5
616a07	5	0729fd23 7815a18d	5
6169e0	a	8bf0ba4f 81e5a18d	5
6169b8	a	89a64875 0765a18d	5
61698f	5	6cea1f67 3c65a18d	5
616965	5	2549d310 29a5a18d	5
61693a	5	48ae45d2 1725a18d	5
61690e	5	7280db31 5c25a18d	5
6168e1	a	ce1b9f34 61c5a18d	5
6168b3	5	4b46727b 7345a18d	5
616884	a	ae0a2569 4845a18d	5
616854	a	ea5fc581 4a85a18d	5
616823	5	33c61a3f b105a18d	5
6167f1	a	c49fb8c5 63f9a18d	5
6167be	5	5a2e0cb4 5f79a18d	5
61678a	5	60009257 1479a18d	5
616755	a	86314e62 eab9a18d	5
61671f	5	3defd9bb be39a18d	5
6166e8	a	bff7e728 c5d9a18d	5
6166b0	a	bda11512 4359a18d	5
616677	5	6513b3b1 fb99a18d	5
61663d	a	decd2468 af19a18d	5
616602	a	f6542b5f d019a18d	5
6165c6	a	dc44b49b d8e9a18d	5
616589	5	42f500ea e469a18d	5
61654b	a	bf2885e1 34a9a18d	5
61650c	a	ec4c69b5 4c29a18d	5

4 HEC AND PACKET HEADER SAMPLE DATA

This section contains examples of HECs computed for sample UAP and packet header contents (Data). The resulting 54 bit packet headers are shown in the rightmost column. Note that the UAP, Data and HEC values are in hexadecimal notation, while the header is in octal notation. The header is transmitted from left to right over the air.

UAP	Data	HEC	Header (octal)
00	123	e1	770007 007070 000777
47	123	06	770007 007007 700000
00	124	32	007007 007007 007700
47	124	d5	007007 007070 707077
00	125	5a	707007 007007 077070
47	125	bd	707007 007070 777707
00	126	e2	077007 007007 000777
47	126	05	077007 007070 700000
00	127	8a	777007 007007 070007
47	127	6d	777007 007070 770770
00	11b	9e	770770 007007 777007
47	11b	79	770770 007070 077770
00	11c	4d	007770 007070 770070
47	11c	aa	007770 007007 070707
00	11d	25	707770 007070 700700
47	11d	c2	707770 007007 000077
00	11e	9d	077770 007070 777007
47	11e	7a	077770 007007 077770
00	11f	f5	777770 007070 707777
47	11f	12	777770 007007 007000

5 CRC SAMPLE DATA

This section shows the CRC computed for a sample 10 byte payload and a UAP of 0x47.

Data:
-----

data[0] = 0x4e
data[1] = 0x01
data[2] = 0x02
data[3] = 0x03
data[4] = 0x04
data[5] = 0x05
data[6] = 0x06
data[7] = 0x07
data[8] = 0x08
data[9] = 0x09

UAP = 0x47

==> CRC = 6d d2

Codeword (hexadecimal notation):

4e 01 02 03 04 05 06 07 08 09 6d d2

NB: Over the air each byte in the codeword
    is sent with the LSB first.

6 COMPLETE SAMPLE PACKETS

6.1 EXAMPLE OF DH1 PACKET

```
Packet header: (MSB...LSB)
--------------------------
LT_ADDR = 011
TYPE = 0100 (DH1)
FLOW = 0
ARQN = 1
SEQN = 0

Payload: (MSB...LSB)
--------------------
payload length: 5 bytes
logical channel = 10 (UA/I, Start L2CAP message)
flow = 1
data byte 1 = 00000001
data byte 2 = 00000010
data byte 3 = 00000011
data byte 4 = 00000100
data byte 5 = 00000101

HEC and CRC initialization: (MSB...LSB)
---------------------------------------
uap = 01000111

NO WHITENING USED




AIR DATA (LSB...MSB)

Packet header (incl HEC):
-------------------------
111111000
000000111000
000111000
000111111000000000000000

Payload (incl payload header and CRC):
--------------------------------------------------------------
01110100
10000000
01000000
11000000
00100000
10100000
1110110000110110
```

6.2 EXAMPLE OF DM1 PACKET

```
Packet header: (MSB...LSB)
--------------------------
LT_ADDR = 011
TYPE = 0011 (DM1)
FLOW = 0
ARQN = 1
SEQN = 0

Payload: (MSB...LSB)
--------------------
payload length: 5 bytes
logical channel = 10 (UA/I, Start L2CAP message)
flow = 1
data byte 1 = 00000001
data byte 2 = 00000010
data byte 3 = 00000011
data byte 4 = 00000100
data byte 5 = 00000101

HEC and CRC initialization: (MSB...LSB)
---------------------------------------
uap = 01000111

NO WHITENING USED




AIR DATA (LSB...MSB)

Packet header (incl HEC):
-------------------------
111111000
111111000000
000111000
111000000111111111111000

Payload (incl payload header, FEC23, CRC and 6 padded zeros):
-------------------------------------------------------------
0111010010 11001
0000000100 01011
0000110000 11110
0000100000 00111
1010000011 01100
1011000011 00010
0110000000 10001
```

7 SIMPLE PAIRING SAMPLE DATA

This section provides sample data for the Simple Pairing cryptographic functions (f1, f2, f3, g and the ECDH calculations).

7.1 P-192 SAMPLE DATA

In each data set, the bytes are ordered from least significant on the right to most significant on the left.

7.1.1 Data Set 1

```
Private A:   07915f86918ddc27005df1d6cf0c142b625ed2eff4a518ff
Private B:   1e636ca790b50f68f15d8dbe86244e309211d635de00e16d
Public A(x): 15207009984421a6586f9fc3fe7e4329d2809ea51125f8ed
Public A(y): b09d42b81bc5bd009f79e4b59dbbaa857fca856fb9f7ea25
DHKey:       fb3ba2012c7e62466e486e229290175b4afebc13fdccee46
```

7.1.2 Data Set 2

```
Private A:   52ec1ca6e0ec973c29065c3ca10be80057243002f09bb43e
Private B:   57231203533e9efe18cc622fd0e34c6a29c6e0fa3ab3bc53
Public A(x): 45571f027e0d690795d61560804da5de789a48f94ab4b07e
Public A(y): 0220016e8a6bce74b45ffec1e664aaa0273b7cbd907a8e2b
DHKey:       a20a34b5497332aa7a76ab135cc0c168333be309d463c0c0
```

7.1.3 Data Set 3

```
Private A:   00a0df08eaf51e6e7be519d67c6749ea3f4517cdd2e9e821
Private B:   2bf5e0d1699d50ca5025e8e2d9b13244b4d322a328be1821
Public A(x): 2ed35b430fa45f9d329186d754eeeb0495f0f653127f613d
Public A(y): 27e08db74e424395052ddae7e3d5a8fecb52a8039b735b73
DHKey:       3b3986ba70790762f282a12a6d3bcae7a2ca01e25b87724e
```

7.1.4 Data Set 4

```
Private A:   030a4af66e1a4d590a83e0284fca5cdf83292b84f4c71168
Private B:   12448b5c69ecd10c0471060f2bf86345c5e83c03d16bae2c
Public A(x): f24a6899218fa912e7e4a8ba9357cb8182958f9fa42c968c
Public A(y): 7c0b8a9ebe6ea92e968c3a65f9f1a9716fe826ad88c97032
DHKey:       4a78f83fba757c35f94abea43e92effdd2bc700723c61939
```

7.1.5 Data Set 5

```
Private A:   604df406c649cb460be16244589a40895c0db7367dc11a2f
Private B:   526c2327303cd505b9cf0c012471902bb9e842ce32b0addc
Public A(x): cbe3c629aceb41b73d475a79fbfe8c08cdc80ceec00ee7c9
```

```
Public A(y): f9f70f7ae42abda4f33af56f7f6aa383354e453fa1a2bd18
DHKey:       64d4fe35567e6ea0ca31f947e1533a635436d4870ce88c45
```

7.1.6 Data Set 6

```
Private A:   1a2c582a09852979eb2cee18fb0befb9a55a6d06f6a8fad3
Private B:   243778916920d68df535955bc1a3cccd5811133a8205ae41
Public A(x): eca2d8d30bbef3ba8b7d591fdb98064a6c7b870cdcebe67c
Public A(y): 2e4163a44f3ae26e70dae86f1bf786e1a5db5562a8ed9fee
DHKey:       6433b36a7e9341940e78a63e31b3cf023282f7f1e3bf83bd
```

7.1.7 Data Set 7

```
Private A:   0f494dd08b493edb07228058a9f30797ff147a5a2adef9b3
Private B:   2da4cd46d9e06e81b1542503f2da89372e927877becec1be
Public A(x): 9f56a8aa27346d66652a546abacc7d69c17fd66e0853989f
Public A(y): d7234c1464882250df7bbe67e0fa22aae475dc58af0c4210
DHKey:       c67beda9baf3c96a30616bf87a7d0ae704bc969e5cad354b
```

7.1.8 Data Set 8

```
Private A:   7381d2bc6ddecb65126564cb1af6ca1985d19fb57f0fff16
Private B:   18e276beff75adc3d520badb3806822e1c820f1064447848
Public A(x): 61c7f3c6f9e09f41423dce889de1973d346f2505a5a3b19b
Public A(y): 919972ff4cd6aed8a4821e3adc358b41f7be07ede20137df
DHKey:       6931496eef2fcfb03e0b1eef515dd4e1b0115b8b241b0b84
```

7.1.9 Data Set 9

```
Private A:   41c7b484ddc37ef6b7952c379f87593789dac6e4f3d8d8e6
Private B:   33e4eaa77f78216e0e99a9b200f81d2ca20dc74ad62d9b78
Public A(x): 9f09c773adb8e7b66b5d986cd15b143341a66d824113c15f
Public A(y): d2000a91738217ab8070a76c5f96c03de317dfab774f4837
DHKey:       a518f3826bb5fa3d5bc37da4217296d5b6af51e5445c6625
```

7.1.10 Data Set 10

```
Private A:   703cf5ee9c075f7726d0bb36d131c664f5534a6e6305d631
Private B:   757291c620a0e7e9dd13ce09ceb729c0ce1980e64d569b5f
Public A(x): fa2b96d382cf894aeeb0bd985f3891e655a6315cd5060d03
Public A(y): f7e8206d05c7255300cc56c88448158c497f2df596add7a2
DHKey:       12a3343bb453bb5408da42d20c2d0fcc18ff078f56d9c68c
```

7.2 HASH FUNCTIONS SAMPLE DATA

In each data set, the bytes are ordered from least significant on the right to most significant on the left.

7.2.1 f1()

```
Set 1a
          U:       15207009984421a6586f9fc3fe7e4329d2809ea51125f8ed
          V:       356b31938421fbbf2fb331c89fd588a69367e9a833f56812
          X:       d5cb8454d177733effffb2ec712baeab
          Z:       00
          output:  1bdc955a9d542ffc9f9e670cdf665010

Set 1b
          U:      15207009984421a6586f9fc3fe7e4329d2809ea51125f8ed
          V:      356b31938421fbbf2fb331c89fd588a69367e9a833f56812
          X:      d5cb8454d177733effffb2ec712baeab
          Z:      80
          output: 611325ebcb6e5269b868113306095fa6

Set 1c
          U:      15207009984421a6586f9fc3fe7e4329d2809ea51125f8ed
          V:      356b31938421fbbf2fb331c89fd588a69367e9a833f56812
          X:      d5cb8454d177733effffb2ec712baeab
          Z:      81
          output: b68df39fd8a406b06a6c517d3666cf91

Set 2a (swapped U and V inputs compared with set 1)
          U:       356b31938421fbbf2fb331c89fd588a69367e9a833f56812
          V:       15207009984421a6586f9fc3fe7e4329d2809ea51125f8ed
          X:       d5cb8454d177733effffb2ec712baeab
          Z:       00
          output:  f4e1ec4b88f305e81477627b1643a927

Set 2b (swapped U and V inputs compared with set 1)
          U:      356b31938421fbbf2fb331c89fd588a69367e9a833f56812
          V:      15207009984421a6586f9fc3fe7e4329d2809ea51125f8ed
          X:      d5cb8454d177733effffb2ec712baeab
          Z:      80
          output: ac6aa7cfa96ae99dd3a74225adb068ae

Set 2c (swapped U and V inputs compared with set 1)
          U:      356b31938421fbbf2fb331c89fd588a69367e9a833f56812
          V:      15207009984421a6586f9fc3fe7e4329d2809ea51125f8ed
          X:      d5cb8454d177733effffb2ec712baeab
          Z:      81
          output: 5ad4721258aa1fa06082edad980d0cc5

Set 3a (U and V set to same value as U in set 1)
          U:       15207009984421a6586f9fc3fe7e4329d2809ea51125f8ed
          V:       15207009984421a6586f9fc3fe7e4329d2809ea51125f8ed
          X:       d5cb8454d177733effffb2ec712baeab
          Z:       00
          output:  49125fc1e8cdc615826c15e5d23ede41
```

```
Set 3b (U and V set to same value as V in set 1)
          U:       356b31938421fbbf2fb331c89fd588a69367e9a833f56812
          V:       356b31938421fbbf2fb331c89fd588a69367e9a833f56812
          X:       d5cb8454d177733effffb2ec712baeab
          Z:       80
          output:  159f204c520565175c2b9c523acad2eb

Set 3c (U and V set to same value as V in set 1)
          U:       356b31938421fbbf2fb331c89fd588a69367e9a833f56812
          V:       356b31938421fbbf2fb331c89fd588a69367e9a833f56812
          X:       d5cb8454d177733effffb2ec712baeab
          Z:       81
          output:  9a162ff9a8235e5b12539ba0ff9179da
```

7.2.2 g()

```
Set 1
          U:15207009984421a6586f9fc3fe7e4329d2809ea51125f8ed
          V:356b31938421fbbf2fb331c89fd588a69367e9a833f56812
          X:        d5cb8454d177733effffb2ec712baeab
          Y:        a6e8e7cc25a75f6e216583f7ff3dc4cf
          output:             52146a1e
          output (decimal):   1377069598
          6 digits (decimal): 069598
```

7.2.3 f2()

```
Set 1
          W:      fb3ba2012c7e62466e486e229290175b4afebc13fdccee46
          N1:     d5cb8454d177733effffb2ec712baeab
          N2:     a6e8e7cc25a75f6e216583f7ff3dc4cf
          keyID:  62746c6b
          A1:     56123737bfce
          A2:     a713702dcfc1
          output: c234c1198f3b520186ab92a2f874934e
```

7.2.4 f3()

```
Set 1
          W:      fb3ba2012c7e62466e486e229290175b4afebc13fdccee46
          N1:     d5cb8454d177733effffb2ec712baeab
          N2:     a6e8e7cc25a75f6e216583f7ff3dc4cf
          R:      12a3343bb453bb5408da42d20c2d0fc8
          IOcap:  000000
          A1:     56123737bfce
          A2:     a713702dcfc1
          output: 5e6a346b8add7ee80e7ec0c2461b1509
```

```
Set 2
          W:      fb3ba2012c7e62466e486e229290175b4afebc13fdccee46
          N1:     d5cb8454d177733effffb2ec712baeab
          N2:     a6e8e7cc25a75f6e216583f7ff3dc4cf
          R:      12a3343bb453bb5408da42d20c2d0fc8
          IOcap:  000001
          A1:     56123737bfce
          A2:     a713702dcfc1
          output: 7840e5445a13e3ce6e48a2decbe51482

Set 3
          W:      fb3ba2012c7e62466e486e229290175b4afebc13fdccee46
          N1:     d5cb8454d177733effffb2ec712baeab
          N2:     a6e8e7cc25a75f6e216583f7ff3dc4cf
          R:      12a3343bb453bb5408da42d20c2d0fc8
          IOcap:  000002
          A1:     56123737bfce
          A2:     a713702dcfc1
          output: da9afb5c6c9dbe0af4722b532520c4b3


Set 4
          W:      fb3ba2012c7e62466e486e229290175b4afebc13fdccee46
          N1:     d5cb8454d177733effffb2ec712baeab
          N2:     a6e8e7cc25a75f6e216583f7ff3dc4cf
          R:      12a3343bb453bb5408da42d20c2d0fc8
          IOcap:  000003
          A1:     56123737bfce
          A2:     a713702dcfc1
          output: 2c0f220c50075285852e01bcee4b5f90

Set 5
          W:      fb3ba2012c7e62466e486e229290175b4afebc13fdccee46
          N1:     d5cb8454d177733effffb2ec712baeab
          N2:     a6e8e7cc25a75f6e216583f7ff3dc4cf
          R:      12a3343bb453bb5408da42d20c2d0fc8
          IOcap:  000100
          A1:     56123737bfce
          A2:     a713702dcfc1
          output: 0a096af0fa61dce0933987febe95fc7d

Set 6
          W:      fb3ba2012c7e62466e486e229290175b4afebc13fdccee46
          N1:     d5cb8454d177733effffb2ec712baeab
          N2:     a6e8e7cc25a75f6e216583f7ff3dc4cf
          R:      12a3343bb453bb5408da42d20c2d0fc8
          IOcap:  000101
          A1:     56123737bfce
```

```
          A2:     a713702dcfc1
          output: 49b8d74007888e770e1a49d6810069b9

Set 7
          W:      fb3ba2012c7e62466e486e229290175b4afebc13fdccee46
          N1:     d5cb8454d177733effffb2ec712baeab
          N2:     a6e8e7cc25a75f6e216583f7ff3dc4cf
          R:      12a3343bb453bb5408da42d20c2d0fc8
          IOcap:  000102
          A1:     56123737bfce
          A2:     a713702dcfc1
          output: 309cd0327dec2514894a0c88b101a436

Set 8
          W:      fb3ba2012c7e62466e486e229290175b4afebc13fdccee46
          N1:     d5cb8454d177733effffb2ec712baeab
          N2:     a6e8e7cc25a75f6e216583f7ff3dc4cf
          R:      12a3343bb453bb5408da42d20c2d0fc8
          IOcap:  000103
          A1:     56123737bfce
          A2:     a713702dcfc1
          output: 4512274ba875b156c2187e2061b90434

Set 9 (same as set 1 with N1 and N2 swapped and A1 and A2 swapped)
          W:      fb3ba2012c7e62466e486e229290175b4afebc13fdccee46
          N1:     a6e8e7cc25a75f6e216583f7ff3dc4cf
          N2:     d5cb8454d177733effffb2ec712baeab
          R:      12a3343bb453bb5408da42d20c2d0fc8
          IOcap:  000000
          A1:     a713702dcfc1
          A2:     56123737bfce
          output: 8d56dc59e70855f563b5e85e42d5964e

Set 10 (same as set 2 with N1 and N2 swapped and A1 and A2 swapped)
          W:      fb3ba2012c7e62466e486e229290175b4afebc13fdccee46
          N1:     a6e8e7cc25a75f6e216583f7ff3dc4cf
          N2:     d5cb8454d177733effffb2ec712baeab
          R:      12a3343bb453bb5408da42d20c2d0fc8
          IOcap:  000001
          A1:     a713702dcfc1
          A2:     56123737bfce
          output: c92fdacbf0ce931e9c4087a9dfb7bc0b

Set 11 (same as set 3 with N1 and N2 swapped and A1 and A2 swapped)
          W:      fb3ba2012c7e62466e486e229290175b4afebc13fdccee46
          N1:     a6e8e7cc25a75f6e216583f7ff3dc4cf
          N2:     d5cb8454d177733effffb2ec712baeab
          R:      12a3343bb453bb5408da42d20c2d0fc8
          IOcap:  000002
```

```
          A1:     a713702dcfc1
          A2:     56123737bfce
          output: 52ac910200dc34285bbbf2144883c498


Set 12 (same as set 4 with N1 and N2 swapped and A1 and A2 swapped)
          W:      fb3ba2012c7e62466e486e229290175b4afebc13fdccee46
          N1:     a6e8e7cc25a75f6e216583f7ff3dc4cf
          N2:     d5cb8454d177733effffb2ec712baeab
          R:      12a3343bb453bb5408da42d20c2d0fc8
          IOcap:  000003
          A1:     a713702dcfc1
          A2:     56123737bfce
          output: c419d677e0d426e6bb36de5fa54c5041

Set 13 (same as set 5 with N1 and N2 swapped and A1 and A2 swapped)
          W:      fb3ba2012c7e62466e486e229290175b4afebc13fdccee46
          N1:     a6e8e7cc25a75f6e216583f7ff3dc4cf
          N2:     d5cb8454d177733effffb2ec712baeab
          R:      12a3343bb453bb5408da42d20c2d0fc8
          IOcap:  000100
          A1:     a713702dcfc1
          A2:     56123737bfce
          output: fb0e1f9f7c623c1bf2675fcff1551137

Set 14 (same as set 6 with N1 and N2 swapped and A1 and A2 swapped)
          W:      fb3ba2012c7e62466e486e229290175b4afebc13fdccee46
          N1:     a6e8e7cc25a75f6e216583f7ff3dc4cf
          N2:     d5cb8454d177733effffb2ec712baeab
          R:      12a3343bb453bb5408da42d20c2d0fc8
          IOcap:  000101
          A1:     a713702dcfc1
          A2:     56123737bfce
          output: 16c7be68184f1170fbbb2bef5a9c515d

Set 15 (same as set 7 with N1 and N2 swapped and A1 and A2 swapped)
          W:      fb3ba2012c7e62466e486e229290175b4afebc13fdccee46
          N1:     a6e8e7cc25a75f6e216583f7ff3dc4cf
          N2:     d5cb8454d177733effffb2ec712baeab
          R:      12a3343bb453bb5408da42d20c2d0fc8
          IOcap:  000102
          A1:     a713702dcfc1
          A2:     56123737bfce
          output: 24849f33d3ac05fef9034c18d9adb310

Set 16 (same as set 8 with N1 and N2 swapped and A1 and A2 swapped)
          W:      fb3ba2012c7e62466e486e229290175b4afebc13fdccee46
          N1:     a6e8e7cc25a75f6e216583f7ff3dc4cf
          N2:     d5cb8454d177733effffb2ec712baeab
```

```
          R:      12a3343bb453bb5408da42d20c2d0fc8
          IOcap:  000103
          A1:     a713702dcfc1
          A2:     56123737bfce
          output: e0f484bb0b071483285903e85094046b


Set 17
          W:      fb3ba2012c7e62466e486e229290175b4afebc13fdccee46
          N1:     d5cb8454d177733effffb2ec712baeab
          N2:     a6e8e7cc25a75f6e216583f7ff3dc4cf
          R:      12a3343bb453bb5408da42d20c2d0fc8
          IOcap:  010000
          A1:     56123737bfce
          A2:     a713702dcfc1
          output: 4bf22677415ed90aceb21873c71c1884

Set 18
          W:      fb3ba2012c7e62466e486e229290175b4afebc13fdccee46
          N1:     d5cb8454d177733effffb2ec712baeab
          N2:     a6e8e7cc25a75f6e216583f7ff3dc4cf
          R:      12a3343bb453bb5408da42d20c2d0fc8
          IOcap:  010001
          A1:     56123737bfce
          A2:     a713702dcfc1
          output: 0d4b97992eb570efb369cfe45e1681b5

Set 19
          W:      fb3ba2012c7e62466e486e229290175b4afebc13fdccee46
          N1:     d5cb8454d177733effffb2ec712baeab
          N2:     a6e8e7cc25a75f6e216583f7ff3dc4cf
          R:      12a3343bb453bb5408da42d20c2d0fc8
          IOcap:  010002
          A1:     56123737bfce
          A2:     a713702dcfc1
          output: 0f0906bbfa75e95c471e97c4211b2741


Set 20
          W:      fb3ba2012c7e62466e486e229290175b4afebc13fdccee46
          N1:     d5cb8454d177733effffb2ec712baeab
          N2:     a6e8e7cc25a75f6e216583f7ff3dc4cf
          R:      12a3343bb453bb5408da42d20c2d0fc8
          IOcap:  010003
          A1:     56123737bfce
          A2:     a713702dcfc1
          output: 88f1f60ce1ff4bf8aa08a170dd061d4e

Set 21
```

```
          W:      fb3ba2012c7e62466e486e229290175b4afebc13fdccee46
          N1:     d5cb8454d177733effffb2ec712baeab
          N2:     a6e8e7cc25a75f6e216583f7ff3dc4cf
          R:      12a3343bb453bb5408da42d20c2d0fc8
          IOcap:  010100
          A1:     56123737bfce
          A2:     a713702dcfc1
          output: 940f88f25317c358d9bd2f146778e36b

Set 22
          W:      fb3ba2012c7e62466e486e229290175b4afebc13fdccee46
          N1:     d5cb8454d177733effffb2ec712baeab
          N2:     a6e8e7cc25a75f6e216583f7ff3dc4cf
          R:      12a3343bb453bb5408da42d20c2d0fc8
          IOcap:  010101
          A1:     56123737bfce
          A2:     a713702dcfc1
          output: 591396355ac4dc72be05a15e718ec945

Set 23
          W:      fb3ba2012c7e62466e486e229290175b4afebc13fdccee46
          N1:     d5cb8454d177733effffb2ec712baeab
          N2:     a6e8e7cc25a75f6e216583f7ff3dc4cf
          R:      12a3343bb453bb5408da42d20c2d0fc8
          IOcap:  010102
          A1:     56123737bfce
          A2:     a713702dcfc1
          output: a3dc055f656abb1d6e11d3f37340189a

Set 24
          W:      fb3ba2012c7e62466e486e229290175b4afebc13fdccee46
          N1:     d5cb8454d177733effffb2ec712baeab
          N2:     a6e8e7cc25a75f6e216583f7ff3dc4cf
          R:      12a3343bb453bb5408da42d20c2d0fc8
          IOcap:  010103
          A1:     56123737bfce
          A2:     a713702dcfc1
          output: fd5412a22ba5dd893852608f8ab0c934

Set 25 (same as set 1 with N1 and N2 swapped and A1 and A2 swapped)
          W:      fb3ba2012c7e62466e486e229290175b4afebc13fdccee46
          N1:     a6e8e7cc25a75f6e216583f7ff3dc4cf
          N2:     d5cb8454d177733effffb2ec712baeab
          R:      12a3343bb453bb5408da42d20c2d0fc8
          IOcap:  010000
          A1:     a713702dcfc1
          A2:     56123737bfce
          output: 2a742039c5fd6c6faafce17b619ac56f
```

Sample Data

```
Set 26 (same as set 2 with N1 and N2 swapped and A1 and A2 swapped)
          W:      fb3ba2012c7e62466e486e229290175b4afebc13fdccee46
          N1:     a6e8e7cc25a75f6e216583f7ff3dc4cf
          N2:     d5cb8454d177733effffb2ec712baeab
          R:      12a3343bb453bb5408da42d20c2d0fc8
          IOcap:  010001
          A1:     a713702dcfc1
          A2:     56123737bfce
          output: a60d89efb52db7905179a6c63b8f212a

Set 27 (same as set 3 with N1 and N2 swapped and A1 and A2 swapped)
          W:      fb3ba2012c7e62466e486e229290175b4afebc13fdccee46
          N1:     a6e8e7cc25a75f6e216583f7ff3dc4cf
          N2:     d5cb8454d177733effffb2ec712baeab
          R:      12a3343bb453bb5408da42d20c2d0fc8
          IOcap:  010002
          A1:     a713702dcfc1
          A2:     56123737bfce
          output: cb02f803d755fd936f0a832f4ee9fd4a


Set 28 (same as set 4 with N1 and N2 swapped and A1 and A2 swapped)
          W:      fb3ba2012c7e62466e486e229290175b4afebc13fdccee46
          N1:     a6e8e7cc25a75f6e216583f7ff3dc4cf
          N2:     d5cb8454d177733effffb2ec712baeab
          R:      12a3343bb453bb5408da42d20c2d0fc8
          IOcap:  010003
          A1:     a713702dcfc1
          A2:     56123737bfce
          output: 00786c04a24561485aaf22808871b874

Set 29 (same as set 5 with N1 and N2 swapped and A1 and A2 swapped)
          W:      fb3ba2012c7e62466e486e229290175b4afebc13fdccee46
          N1:     a6e8e7cc25a75f6e216583f7ff3dc4cf
          N2:     d5cb8454d177733effffb2ec712baeab
          R:      12a3343bb453bb5408da42d20c2d0fc8
          IOcap:  010100
          A1:     a713702dcfc1
          A2:     56123737bfce
          output: 2a58ef2d99281d472a88027423f8215f

Set 30 (same as set 6 with N1 and N2 swapped and A1 and A2 swapped)
          W:      fb3ba2012c7e62466e486e229290175b4afebc13fdccee46
          N1:     a6e8e7cc25a75f6e216583f7ff3dc4cf
          N2:     d5cb8454d177733effffb2ec712baeab
          R:      12a3343bb453bb5408da42d20c2d0fc8
          IOcap:  010101
          A1:     a713702dcfc1
          A2:     56123737bfce
```

```
          output: ff7ab3752a144232f2cbbcbf979f5517

Set 31 (same as set 7 with N1 and N2 swapped and A1 and A2 swapped)
          W:      fb3ba2012c7e62466e486e229290175b4afebc13fdccee46
          N1:     a6e8e7cc25a75f6e216583f7ff3dc4cf
          N2:     d5cb8454d177733effffb2ec712baeab
          R:      12a3343bb453bb5408da42d20c2d0fc8
          IOcap:  010102
          A1:     a713702dcfc1
          A2:     56123737bfce
          output: 9d7fccef23625b1cc684fbf3f8b0e182

Set 32 (same as set 8 with N1 and N2 swapped and A1 and A2 swapped)
          W:      fb3ba2012c7e62466e486e229290175b4afebc13fdccee46
          N1:     a6e8e7cc25a75f6e216583f7ff3dc4cf
          N2:     d5cb8454d177733effffb2ec712baeab
          R:      12a3343bb453bb5408da42d20c2d0fc8
          IOcap:  010103
          A1:     a713702dcfc1
          A2:     56123737bfce
          output: 864f87e26dece4dfdde30ade1e463d4f
```

7.2.5 h2()

Each element in this section except for 'L' is a multi-octet integer arranged with the least significant octet on the right and the most significant octet on the left.

```
Set 1 (Generic AMP initial creation)
    W:      c234c1198f3b520186ab92a2f874934ec234c1198f3b520186ab92a2f874934e
    keyID:  67616d70 ('gamp')
    L:      32
    output: 7E010832407F59D51CB473FB0D3355899C077DD052D0F5F03F0FA4B964097A04

Set 2 (802.11)
    W:      7E010832407F59D51CB473FB0D3355899C077DD052D0F5F03F0FA4B964097A04
    keyID:  38303262 ('802b')
    L:      32
    output: D660DC08E542F1DCC32CDC2000B548F06BC1D7EB0F227DD809B50D9F1945C68E

Set 3 (Generic AMP refresh after 802.11)
    W:      7E010832407F59D51CB473FB0D3355899C077DD052D0F5F03F0FA4B964097A04
    keyID:  67616d70 ('gamp')
    L:      32
    output: AA8247E5DBAFC80F908C1C2ECA2F73E86D41DF754355994B220D5817040991B2

Set 4 (ECMA-368)
    W:      AA8247E5DBAFC80F908C1C2ECA2F73E86D41DF754355994B220D5817040991B2
    keyID:  65636d61 ('ecma')
```

Sample Data

```
    L:      16
    output: 89286411644B33DC378A93A1B1506AFF

Set 5 (Generic AMP refresh after ECMA-368)
    W:      AA8247E5DBAFC80F908C1C2ECA2F73E86D41DF754355994B220D5817040991B2
    keyID:  67616d70 ('gamp')
    L:      32
    output: 925CAE4683A2CCF105ED141F5370AB501448E83D2E43F38573120360B100F27D
```

8 WHITENING SEQUENCE SAMPLE DATA

This section shows the output of the whitening sequence generator.

Whitening Sequence (=D7)	Whitening LFSR D7.....D0
1	1111111
1	1101111
1	1001111
0	0001111
0	0011110
0	0111100
1	1111000
1	1100001
1	1010011
0	0110111
1	1101110
1	1001101
0	0001011
0	0010110
0	0101100
1	1011000
0	0100001
1	1000010
0	0010101
0	0101010
1	1010100
0	0111001
1	1110010
1	1110101
1	1111011
1	1100111
1	1011111
0	0101111
1	1011110
0	0101101
1	1011010
0	0100101
1	1001010
0	0000101
0	0001010
0	0010100
0	0101000
1	1010000
0	0110001
1	1100010
1	1010101
0	0111011
1	1110110

Sample Data

```
1       1111101
1       1101011
1       1000111
0       0011111
0       0111110
1       1111100
1       1101001
1       1000011
0       0010111
0       0101110
1       1011100
0       0101001
1       1010010
0       0110101
1       1101010
1       1000101
0       0011011
0       0110110
1       1101100
1       1001001
0       0000011
0       0000110
0       0001100
0       0011000
0       0110000
1       1100000
1       1010001
0       0110011
1       1100110
1       1011101
0       0101011
1       1010110
0       0111101
1       1111010
1       1100101
1       1011011
0       0100111
1       1001110
0       0001101
0       0011010
0       0110100
1       1101000
1       1000001
0       0010011
0       0100110
1       1001100
0       0001001
0       0010010
0       0100100
1       1001000
0       0000001
0       0000010
```

Sample Data

0	0000100
0	0001000
0	0010000
0	0100000
1	1000000
0	0010001
0	0100010
1	1000100
0	0011001
0	0110010
1	1100100
1	1011001
0	0100011
1	1000110
0	0011101
0	0111010
1	1110100
1	1111001
1	1100011
1	1010111
0	0111111
1	1111110
1	1101101
1	1001011
0	0000111
0	0001110
0	0011100
0	0111000
1	1110000
1	1110001
1	1110011
1	1110111
1	1111111

9 FEC SAMPLE DATA

```
================================================
 Rate 2/3 FEC -- (15,10) Shortened Hamming Code
================================================

Data is in hexadecimal notation, the codewords are in binary notation. The codeword bits
are sent from left to right over the air interface. The space in the codeword indicates
the start of parity bits.

Data:           Codeword:

0x001       1000000000 11010
0x002       0100000000 01101
0x004       0010000000 11100
0x008       0001000000 01110
0x010       0000100000 00111
0x020       0000010000 11001
0x040       0000001000 10110
0x080       0000000100 01011
0x100       0000000010 11111
0x200       0000000001 10101
```

10 ENCRYPTION KEY SAMPLE DATA

Explanation:

For the sections 9.1 - 9.5, the hexadecimal sample data is written with the least significant byte at the leftmost position and the most significant byte at the rightmost position. Within each byte, the *least significant bit* (LSB) is at the rightmost position and the *most significant bit* (MSB) is at the leftmost position Thus, a line reading:

aco: 48afcdd4bd40fef76693b113

means aco[0]=0x48, ac[1]=0xaf, ..., aco[11]=0x13. The LSB of aco[11] is '1' and the MSB of aco[11] is '0'.

Key [i]: denotes the ith sub-key in Ar or A'r;
round r: denotes the input to the rth round;
added ->: denotes the input to round 3 in A'r after adding original input (of round 1).

10.1 FOUR TESTS OF E1

```
rand    :00000000000000000000000000000000
address :000000000000
key     :00000000000000000000000000000000
round  1:00000000000000000000000000000000
Key [ 1]:00000000000000000000000000000000
Key [ 2]:4697b1baa3b7100ac537b3c95a28ac64
round  2:78d19f9307d2476a523ec7a8a026042a
Key [ 3]:ecabaac66795580df89af66e66dc053d
Key [ 4]:8ac3d8896ae9364943bfebd4969b68a0
round  3:600265247668dda0e81c07bbb30ed503
Key [ 5]:5d57921fd5715cbb22c1be7bbc996394
Key [ 6]:2a61b8343219fdfb1740e6511d41448f
round  4:d7552ef7cc9dbde568d80c2215bc4277
Key [ 7]:dd0480dee731d67f01a2f739da6f23ca
Key [ 8]:3ad01cd1303e12a1cd0fe0a8af82592c
round  5:fb06bef32b52ab8f2a4f2b6ef7f6d0cd
Key [ 9]:7dadb2efc287ce75061302904f2e7233
Key [10]:c08dcfa981e2c4272f6c7a9f52e11538
round  6:b46b711ebb3cf69e847a75f0ab884bdd
Key [11]:fc2042c708e409555e8c147660ffdfd7
Key [12]:fa0b21001af9a6b9e89e624cd99150d2
round  7:c585f308ff19404294f06b292e978994
Key [13]:18b40784ea5ba4c80ecb48694b4e9c35
Key [14]:454d54e5253c0c4a8b3fcca7db6baef4
round  8:2665fadb13acf952bf74b4ab12264b9f
Key [15]:2df37c6d9db52674f29353b0f011ed83
Key [16]:b60316733b1e8e70bd861b477e2456f1
Key [17]:884697b1baa3b7100ac537b3c95a28ac
```

Sample Data

```
round  1:158ffe43352085e8a5ec7a88e1ff2ba8
Key [ 1]:e9e5dfc1b3a79583e9e5dfc1b3a79583
Key [ 2]:7595bf57e0632c59f435c16697d4c864
round  2:0b5cc75febcdf7827ca29ec0901b6b5b
Key [ 3]:e31b96afcc75d286ef0ae257cbbc05b7
Key [ 4]:0d2a27b471bc0108c6263aff9d9b3b6b
round  3:e4278526c8429211f7f2f0016220aef4
added ->:f1b68365fd6217f952de6a89831fd95c
Key [ 5]:98d1eb5773cf59d75d3b17b3bc37c191
Key [ 6]:fd2b79282408ddd4ea0aa7511133336f
round  4:d0304ad18337f86040145d27aa5c8153
Key [ 7]:331227756638a41d57b0f7e071ee2a98
Key [ 8]:aa0dd8cc68b406533d0f1d64aabacf20
round  5:84db909d213bb0172b8b6aaf71bf1472
Key [ 9]:669291b0752e63f806fce76f10e119c8
Key [10]:ef8bdd46be8ee0277e9b78adef1ec154
round  6:f835f52921e903dfa762f1df5abd7f95
Key [11]:f3902eb06dc409cfd78384624964bf51
Key [12]:7d72702b21f97984a721c99b0498239d
round  7:ae6c0b4bb09f25c6a5d9788a31b605d1
Key [13]:532e60bceaf902c52a06c2c283ecfa32
Key [14]:181715e5192efb2a64129668cf5d9dd4
round  8:744a6235b86cc0b853cc9f74f6b65311
Key [15]:83017c1434342d4290e961578790f451
Key [16]:2603532f365604646ff65803795ccce5
Key [17]:882f7c907b565ea58dae1c928a0dcf41
sres    :056c0fe6
aco     :48afcdd4bd40fef76693b113
----------------------------------------
rand    :bc3f30689647c8d7c5a03ca80a91eceb
address :7ca89b233c2d
key     :159dd9f43fc3d328efba0cd8a861fa57
round  1:bc3f30689647c8d7c5a03ca80a91eceb
Key [ 1]:159dd9f43fc3d328efba0cd8a861fa57
Key [ 2]:326558b3c15551899a97790e65ff669e
round  2:3e950edf197615638cc19c09f8fedc9b
Key [ 3]:62e879b65b9f53bbfbd020c624b1d682
Key [ 4]:73415f30bac8ab61f410adc9442992db
round  3:6a7640791cb536678936c5ecd4ae5a73
Key [ 5]:5093cfa1d31c1c48acd76df030ea3c31
Key [ 6]:0b4acc2b8f1f694fc7bd91f4a70f3009
round  4:fca2c022a577e2ffb2aa007589693ec7
Key [ 7]:2ca43fc817947804ecff148d50d6f6c6
Key [ 8]:3fcd73524b533e00b7f7825bea2040a4
round  5:e97f8ea4ed1a6f4a36ffc179dc6bb563
Key [ 9]:6c67bec76ae8c8cc4d289f69436d3506
Key [10]:95ed95ee8cb97e61d75848464bffb379
round  6:38b07261d7340d028749de1773a415c7
Key [11]:ff566c1fc6b9da9ac502514550f3e9d2
Key [12]:ab5ce3f5c887d0f49b87e0d380e12f47
round  7:58241f1aed7c1c3e047d724331a0b774
Key [13]:a2cab6f95eac7d655dbe84a6cd4c47f5
```

Sample Data

```
Key [14]:f5caff88af0af8c42a20b5bbd2c8b460
round  8:3d1aaeff53c0910de63b9788b13c490f
Key [15]:185099c1131cf97001e2f36fda415025
Key [16]:a0ebb82676bc75e8378b189eff3f6b1d
Key [17]:cf5b348aaee27ae332b4f1bfa10289a6
round  1:2e4b417b9a2a9cfd7d8417d9a6a556eb
Key [ 1]:fe78b835f26468ab069fd3991b086fda
Key [ 2]:095c5a51c6fa6d3ac1d57fa19aa382bd
round  2:b8bca81d6bb45af9d92beadd9300f5ed
Key [ 3]:1af866df817fd9f4ec00bc704192cffc
Key [ 4]:f4a8a059c1f575f076f5fbb24bf16590
round  3:351aa16dec2c3a4787080249ed323eae
added ->:1b65e2167656d6bafa8c19904bd79445
Key [ 5]:8c9d18d9356a9954d341b4286e88ea1f
Key [ 6]:5c958d370102c9881bf753e69c7da029
round  4:2ce8fef47dda6a5bee74372e33e478a2
Key [ 7]:7eb2985c3697429fbe0da334bb51f795
Key [ 8]:af900f4b63a1138e2874bfb7c628b7b8
round  5:572787f563e1643c1c862b7555637fb4
Key [ 9]:834c8588dd8f3d4f31117a488420d69b
Key [10]:bc2b9b81c15d9a80262f3f48e9045895
round  6:16b4968c5d02853c3a43aa4cdb5f26ac
Key [11]:f08608c9e39ad3147cba61327919c958
Key [12]:2d4131decf4fa3a959084714a9e85c11
round  7:10e4120c7cccef9dd4ba4e6da8571b01
Key [13]:c934fd319c4a2b5361fa8eef05ae9572
Key [14]:4904c17aa47868e40471007cde3a97c0
round  8:f9081772498fed41b6ffd72b71fcf6c6
Key [15]:ea5e28687e97fa3f833401c86e6053ef
Key [16]:1168f58252c4ecfccafbdb3af857b9f2
Key [17]:b3440f69ef951b78b5cbd6866275301b
sres    :8d5205c5
aco     :3ed75df4abd9af638d144e94
----------------------------------------
rand    :0891caee063f5da1809577ff94ccdcfb
address :c62f19f6ce98
key     :45298d06e46bac21421ddfbed94c032b
round  1:0891caee063f5da1809577ff94ccdcfb
Key [ 1]:45298d06e46bac21421ddfbed94c032b
Key [ 2]:8f03e1e1fe1c191cad35a897bc400597
round  2:1c6ca013480a685c1b28e0317f7167e1
Key [ 3]:4f2ce3a092dde854ef496c8126a69e8e
Key [ 4]:968caee2ac6d7008c07283daec67f2f2
round  3:06b4915f5fcc1fc551a52048f0af8a26
Key [ 5]:ab0d5c31f94259a6bf85ee2d22edf56c
Key [ 6]:dfb74855c0085ce73dc17b84bfd50a92
round  4:077a92b040acc86e6e0a877db197a167
Key [ 7]:8f888952662b3db00d4e904e7ea53b5d
Key [ 8]:5e18bfcc07799b0132db88cd6042f599
round  5:7204881fb300914825fdc863e8ceadf3
Key [ 9]:bfca91ad9bd3d1a06c582b1d5512dddf
Key [10]:a88bc477e3fa1d5a59b5e6cf793c7a41
```

Sample Data

```
round  6:27031131d86cea2d747deb4f756143aa
Key [11]:f3cfb8dac8aea2a6a8ef95af3a2a2767
Key [12]:77beb90670c5300b03aa2b2232d3d40c
round  7:fc8c13d49149b1ce8d86f96e44a00065
Key [13]:b578373650af36a06e19fe335d726d32
Key [14]:6bcee918c7d0d24dfdf42237fcf99d53
round  8:04ef5f5a7ddf846cda0a07782fc23866
Key [15]:399f158241eb3e079f45d7b96490e7ea
Key [16]:1bcfbe98ecde2add52aa63ea79fb917a
Key [17]:ee8bc03ec08722bc2b075492873374af
round  1:d989d7a40cde7032d17b52f8117b69d5
Key [ 1]:2ecc6cc797cc41a2ab02007f6af396ae
Key [ 2]:acfaef7609c12567d537ae1cf9dc2198
round  2:8e76eb9a29b2ad5eea790db97aee37c1
Key [ 3]:079c8ff9b73d428df879906a0b87a6c8
Key [ 4]:19f2710baf403a494193d201f3a8c439
round  3:346bb7c35b2539676375aafe3af69089
added ->:edf48e675703a955b2f0fc062b71f95c
Key [ 5]:d623a6498f915cb2c8002765247b2f5a
Key [ 6]:900109093319bc30108b3d9434a77a72
round  4:fafb6c1f3ebbd2477be2da49dd923f69
Key [ 7]:e28e2ee6e72e7f4e5b5c11f10d204228
Key [ 8]:8e455cd11f8b9073a2dfa5413c7a4bc5
round  5:7c72230df588060a3cf920f9b0a08f06
Key [ 9]:28afb26e2c7a64238c41cefc16c53e74
Key [10]:d08dcafc2096395ba0d2dddd0e471f4d
round  6:55991df991db26ff00073a12baa3031d
Key [11]:fcffdcc3ad8faae091a7055b934f87c1
Key [12]:f8df082d77060252c02d91e55bd6a7d6
round  7:70ec682ff864375f63701fa4f6be5377
Key [13]:bef3706e523d708e8a44147d7508bc35
Key [14]:3e98ab283ca2422d56a56cf8b06caeb3
round  8:172f12ec933da85504b4ea5c90f8f0ea
Key [15]:87ad9625d06645d22598dd5ef811ea2c
Key [16]:8bd3db0cc8168009e5da90877e13a36f
Key [17]:0e74631d813a8351ac7039b348c41b42
sres    :00507e5f
aco     :2a5f19fbf60907e69f39ca9f
----------------------------------------
rand    :0ecd61782b4128480c05dc45542b1b8c
address :f428f0e624b3
key     :35949a914225fabad91995d226de1d92
round  1:0ecd61782b4128480c05dc45542b1b8c
Key [ 1]:35949a914225fabad91995d226de1d92
Key [ 2]:ea6b3dcccc8ee5d88de349fa5010404f
round  2:8935e2e263fbc4b9302cabdfc06bce3e
Key [ 3]:920f3a0f2543ce535d4e7f25ad80648a
Key [ 4]:ad47227edf9c6874e80ba80ebb95d2c9
round  3:b4c8b878675f184a0c72f3dab51f8f05
Key [ 5]:81a941ca7202b5e884ae8fa493ecac3d
Key [ 6]:bcde1520bee3660e86ce2f0fb78b9157
round  4:77ced9f2fc42bdd5c6312b87fc2377c5
```

Sample Data

```
Key [ 7]:c8eee7423d7c6efa75ecec0d2cd969d3
Key [ 8]:910b3f838a02ed441fbe863a02b4a1d0
round  5:fe28e8056f3004d60bb207e628b39cf2
Key [ 9]:56c647c1e865eb078348962ae070972d
Key [10]:883965da77ca5812d8104e2b640aec0d
round  6:1f2ba92259d9e88101518f145a33840f
Key [11]:61d4cb7e4f8868a283327806a9bd8d4d
Key [12]:9f57de3a3ff310e21dc1e696ce060304
round  7:cc9b5d0218d29037e88475152ebebb2f
Key [13]:7aa1d8adc1aeed7127ef9a18f6eb2d8e
Key [14]:b4db9da3bf865912acd14904c7f7785d
round  8:b04d352bedc02682e4a7f59d7cda1dba
Key [15]:a13d7141ef1f6c7d867e3d175467381b
Key [16]:08b2bc058e50d6141cdd566a307e1acc
Key [17]:057b2b4b4be5dc0ac49e50489b8006c9
round  1:5cfacc773bae995cd7f1b81e7c9ec7df
Key [ 1]:1e717950f5828f3930fe4a9395858815
Key [ 2]:d1623369b733d98bbc894f75866c544c
round  2:d571ffa21d9daa797b1a0a3c962fc64c
Key [ 3]:4abf27664ae364cc8a7e5bcf88214cc4
Key [ 4]:2aaedda8dc4933dd6aeaf6e5c0d5a482
round  3:e17c8e498a00f125bf654c938c23f36d
added ->:bd765a3eb1ae8a796856048df0c1bab2
Key [ 5]:bc7f8ab2d86000f47b1946cc8d7a7a2b
Key [ 6]:6b28544cb13ec6c5d98470df2cf900b7
round  4:a9727c26f2f06bd9920e83c8605dcd76
Key [ 7]:1be840d9107f2c9523f66bb19f5464a1
Key [ 8]:61d6fb1aa2f0c2b26fb2a3d6de8c177c
round  5:aeff751f146eab7e4626b2e2c9e2fb39
Key [ 9]:adabfc82570c568a233173099f23f4c2
Key [10]:b7df6b55ad266c0f1ff7452101f59101
round  6:cf412b95f454d5185e67ca671892e5bd
Key [11]:8e04a7282a2950dcbaea28f300e22de3
Key [12]:21362c114433e29bda3e4d51f803b0cf
round  7:16165722fe4e07ef88f8056b17d89567
Key [13]:710c8fd5bb3cbb5f132a7061de518bd9
Key [14]:0791de7334f4c87285809343f3ead3bd
round  8:28854cd6ad4a3c572b15490d4b81bc3f
Key [15]:4f47f0e5629a674bfcd13770eb3a3bd9
Key [16]:58a6d9a16a284cc0aead2126c79608a1
Key [17]:a564082a0a98399f43f535fd5cefad34
sres    :80e5629c
aco     :a6fe4dcde3924611d3cc6ba1


========================================
```

10.2 FOUR TESTS OF E21

```
rand    :00000000000000000000000000000000
address :000000000000
round  1:00000000000000000000000000000000
Key [ 1]:00000000000000000000000000000006
Key [ 2]:4697b1baa3b7100ac537b3c95a28dc94
round  2:98611307ab76bbde9a86af1ce8cad412
Key [ 3]:ecabaac66795580df89af66e665d863d
Key [ 4]:8ac3d8896ae9364943bfebd4a2a768a0
round  3:820999ad2e6618f4b578974beeedf9e7
added ->:820999ad2e6618f4b578974beeedf9e7
Key [ 5]:5d57921fd5715cbb22c1bedb1c996394
Key [ 6]:2a61b8343219fdfb1740e9541d41448f
round  4:acd6edec87581ac22dbdc64ea4ced3a2
Key [ 7]:dd0480dee731d67f01ba0f39da6f23ca
Key [ 8]:3ad01cd1303e12a18dcfe0a8af82592c
round  5:1c7798732f09fbfe25795a4a2fbc93c2
Key [ 9]:7dadb2efc287ce7b0c1302904f2e7233
Key [10]:c08dcfa981e2f4572f6c7a9f52e11538
round  6:c05b88b56aa70e9c40c79bb81cd911bd
Key [11]:fc2042c708658a555e8c147660ffdfd7
Key [12]:fa0b21002605a6b9e89e624cd99150d2
round  7:abacc71b481c84c798d1bdf3d62f7e20
Key [13]:18b407e44a5ba4c80ecb48694b4e9c35
Key [14]:454d57e8253c0c4a8b3fcca7db6baef4
round  8:e8204e1183ae85cf19edb2c86215b700
Key [15]:2d0b946d9db52674f29353b0f011ed83
Key [16]:76c316733b1e8e70bd861b477e2456f1
Key [17]:8e4697b1baa3b7100ac537b3c95a28ac
Ka      :d14ca028545ec262cee700e39b5c39ee
----------------------------------------
rand    :2dd9a550343191304013b2d7e1189d09
address :cac4364303b6
round  1:cac4364303b6cac4364303b6cac43643
Key [ 1]:2dd9a550343191304013b2d7e1189d0f
Key [ 2]:14c4335b2c43910c5dcc71d81a14242b
round  2:e169f788aad45a9011f11db5270b1277
Key [ 3]:55bfb712cba168d1a48f6e74cd9f4388
Key [ 4]:2a2b3aacca695caef2821b0fb48cc253
round  3:540f9c76652e92c44987c617035037bf
added ->:9ed3d23566e45c007fcac9a1c9146dfc
Key [ 5]:a06aab22d9a2873840429 76b4b6b00ee
Key [ 6]:c229d054bb72e8eb230e6dcdb32d16b7
round  4:83659a41675f7171ea57909dc5a79ab4
Key [ 7]:23c4812ab1905ddf77dedaed4105649a
Key [ 8]:40d87e272a7a1554ae2e85e3638cdf52
round  5:0b9382d0ed4f2fccdbb69d0db7b130a4
Key [ 9]:bdc064c6a39f6b84fe40db359f62a3c4
Key [10]:58228db841ce3cee983aa721f36aa1b9
round  6:c6ebda0f8f489792f09c189568226c1f
Key [11]:a815bacd6fa747a0d4f52883ac63ebe7
```

Sample Data

```
Key [12]:a9ce513b38ea006c333ecaaefcf1d0f8
round  7:75a8aba07e69c9065bcd831c40115116
Key [13]:3635e074792d4122130e5b824e52cd60
Key [14]:511bdb61bb28de72a5d794bffbf407df
round  8:57a6e279dcb764cf7dd6a749dd60c735
Key [15]:a32f5f21044b6744b6d913b13cdb4c0a
Key [16]:9722bbaeef281496ef8c23a9d41e92f4
Key [17]:807370560ad7e8a13a054a65a03b4049
Ka      :e62f8bac609139b3999aedbc9d228042
----------------------------------------
rand    :dab3cffe9d5739d1b7bf4a667ae5ee24
address :02f8fd4cd661
round  1:02f8fd4cd66102f8fd4cd66102f8fd4c
Key [ 1]:dab3cffe9d5739d1b7bf4a667ae5ee22
Key [ 2]:e315a8a65d809ec7c289e69c899fbdcc
round  2:ef85ff081b8709405e19f3e275cec7dc
Key [ 3]:df6a119bb50945fc8a3394e7216448f3
Key [ 4]:87fe86fb0d58b5dd0fb3b6b1dab51d07
round  3:aa25c21bf577d92dd97381e3e9edcc54
added ->:a81dbf5723d8dbd524bf5782ebe5c918
Key [ 5]:36cc253c506c0021c91fac9d8c469e90
Key [ 6]:d5fda00f113e303809b7f7d78a1a2b0e
round  4:9e69ce9b53caec3990894d2baed41e0d
Key [ 7]:c14b5edc10cabf16bc2a2ba4a8ae1e40
Key [ 8]:74c6131afc8dce7e11b03b1ea8610c16
round  5:a5460fa8cedca48a14fd02209e01f02e
Key [ 9]:346cfc553c6cbc9713edb55f4dcbc96c
Key [10]:bddf027cb059d58f0509f8963e9bdec6
round  6:92b33f11eadcacc5a43dd05f13d334dd
Key [11]:8eb9e040c36c4c0b4a7fd3dd354d53c4
Key [12]:c6ffecdd5e135b20879b9dfa4b34bf51
round  7:fb0541aa5e5df1a61c51aef606eb5a41
Key [13]:bf12f5a6ba08dfc4fda4bdfc68c997d9
Key [14]:37c4656b9215f3c959ea688fb64ad327
round  8:f0bbd2b94ae374346730581fc77a9c98
Key [15]:e87bb0d86bf421ea4f779a8eee3a866c
Key [16]:faa471e934fd415ae4c0113ec7f0a5ad
Key [17]:95204a80b8400e49db7cf6fd2fd40d9a
Ka      :b0376d0a9b338c2e133c32b69cb816b3
----------------------------------------
rand    :13ecad08ad63c37f8a54dc56e82f4dc1
address :9846c5ead4d9
round  1:9846c5ead4d99846c5ead4d99846c5ea
Key [ 1]:13ecad08ad63c37f8a54dc56e82f4dc7
Key [ 2]:ad04f127bed50b5e671d6510d392eaed
round  2:97374e18cdd0a6f7a5aa49d1ac875c84
Key [ 3]:57ad159e5774fa222f2f3039b9cd5101
Key [ 4]:9a1e9e1068fede02ef90496e25fd8e79
round  3:9dd3260373edd9d5f4e774826b88fd2d
added ->:0519ebe9a7c6719331d1485bf3cec2c7
Key [ 5]:378dce167db62920b0b392f7cfca316e
Key [ 6]:db4277795c87286faee6c9e9a6b71a93
```

Sample Data

```
round  4:40ec6563450299ac4e120d88672504d6
Key [ 7]:ec01aa2f5a8a793b36c1bb858d254380
Key [ 8]:2921a66cfa5bf74ac535424564830e98
round  5:57287bbb041bd6a56c2bd931ed410cd4
Key [ 9]:07018e45aab61b3c3726ee3d57dbd5f6
Key [10]:627381f0fa4c02b0c7d3e7dfbffc3333
round  6:66affa66a8dcd36e36bf6c3f1c6a276e
Key [11]:33b57c925bd5551999f716e138efbe79
Key [12]:a6dc7f9aa95bcc9243aebd12608f657a
round  7:450e65184fd8c72c578d5cdecb286743
Key [13]:a6a6db00fd8c72a28ea57ea542f6e102
Key [14]:dcf3377daeb2e24e61f0ad6620951c1f
round  8:e5eb180b519a4e673f21b7c4f4573f3d
Key [15]:621240b9506b462a7fa250da41844626
Key [16]:ae297810f01f43dc35756cd119ee73d6
Key [17]:b959835ec2501ad3894f8b8f1f4257f9
Ka      :5b61e83ad04d23e9d1c698851fa30447
========================================
```

10.3 THREE TESTS OF E22

(for K_master and overlay generation)

```
rand    :001de169248850245a5f7cc7f0d6d633
PIN     :d5a51083a04a1971f18649ea8b79311a
round  1:001de169248850245a5f7cc7f0d6d623
Key [ 1]:d5a51083a04a1971f18649ea8b79311a
Key [ 2]:7317cdbff57f9b99f9810a2525b17cc7
round  2:5f05c143347b59acae3cb002db23830f
Key [ 3]:f08bd258adf1d4ae4a54d8ccb26220b2
Key [ 4]:91046cbb4ccc43db18d6dd36ca7313eb
round  3:c8f3e3300541a25b6ac5a80c3105f3c4
added ->:c810c45921c9f27f302424cbc1dbc9e7
Key [ 5]:67fb2336f4d9f069da58d11c82f6bd95
Key [ 6]:4fed702c75bd72c0d3d8f38707134c50
round  4:bd5e0c3a97fa55b91a3bbbf306ebb978
Key [ 7]:41c947f80cdc0464c50aa89070af314c
Key [ 8]:680eecfa8daf41c7109c9a5cb1f26d75
round  5:21c1a762c3cc33e75ce8976a73983087
Key [ 9]:6e33fbd94d00ff8f72e8a7a0d2cebc4c
Key [10]:f4d726054c6b948add99fabb5733ddc3
round  6:56d0df484345582f6b574a449ba155eb
Key [11]:4eda2425546a24cac790f49ef2453b53
Key [12]:cf2213624ed1510408a5a3e00b7333df
round  7:120cf9963fe9ff22993f7fdf9600d9b8
Key [13]:d04b1a25b0b8fec946d5ecfa626d04c9
Key [14]:01e5611b0f0e140bdb64585fd3ae5269
round  8:a6337400ad8cb47fefb91332f5cb2713
Key [15]:f15b2dc433f534f61bf718770a3698b1
Key [16]:f990d0273d8ea2b9e0b45917a781c720
Key [17]:f41b3cc13d4301297bb6bdfcb3e5a1dd
Ka      :539e4f2732e5ae2de1e0401f0813bd0d
```

Sample Data

```
----------------------------------------
rand    :67ed56bfcf99825f0c6b349369da30ab
PIN     :7885b515e84b1f082cc499976f1725ce
round  1:67ed56bfcf99825f0c6b349369da30bb
Key [ 1]:7885b515e84b1f082cc499976f1725ce
Key [ 2]:72445901fdaf506beb036f4412512248
round  2:6b160b66a1f6c26c1f3432f463ef5aa1
Key [ 3]:59f0e4982e97633e5e7fd133af8f2c5b
Key [ 4]:b4946ec77a41bf7c729d191e33d458ab
round  3:3f22046c964c3e5ca2a26ec9a76a9f67
added ->:580f5ad359e5c003ae0da25ace44cfdc
Key [ 5]:eb0b839f97bdf534183210678520bbef
Key [ 6]:cff0bc4a94e5c8b2a2d24d9f59031e19
round  4:87aa61fc0ff88e744c195249b9a33632
Key [ 7]:592430f14d8f93db95dd691af045776d
Key [ 8]:3b55b404222bf445a6a2ef5865247695
round  5:83dcf592a854226c4dcd94e1ecf1bc75
Key [ 9]:a9714b86319ef343a28b87456416bd52
Key [10]:e6598b24390b3a0bf2982747993b0d78
round  6:dee0d13a52e96bcf7c72045a21609fc6
Key [11]:62051d8c51973073bff959b032c6e1e2
Key [12]:29e94f4ab73296c453c833e217a1a85b
round  7:08488005761e6c7c4dbb203ae453fe3a
Key [13]:0e255970b3e2fc235f59fc5acb10e8ce
Key [14]:d0dfbb3361fee6d4ffe45babf1cd7abf
round  8:0d81e89bddde7a7065316c47574feb8f
Key [15]:c12eee4eb38b7a171f0f736003774b40
Key [16]:8f962523f1c0abd9a087a0dfb11643d3
Key [17]:24be1c66cf8b022f12f1fb4c60c93fd1
Ka      :04435771e03a9daceb8bb1a493ee9bd8
----------------------------------------
rand    :40a94509238664f244ff8e3d13b119d3
PIN     :1ce44839badde30396d03c4c36f23006
round  1:40a94509238664f244ff8e3d13b119c3
Key [ 1]:1ce44839badde30396d03c4c36f23006
Key [ 2]:6dd97a8f91d628be4b18157af1a9dcba
round  2:0eac5288057d9947a24eabc1744c4582
Key [ 3]:fef9583d5f55fd4107ad832a725db744
Key [ 4]:fc3893507016d7c1db2bd034a230a069
round  3:60b424f1082b0cc3bd61be7b4c0155f0
added ->:205d69f82bb17031f9604c465fb26e33
Key [ 5]:0834d04f3e7e1f7f85f0c1db685ab118
Key [ 6]:1852397f9a3723169058e9b62bb3682b
round  4:2c6b65a49d66af6566675afdd6fa7d7d
Key [ 7]:6c10da21d762ae4ac1ba22a96d9007b4
Key [ 8]:9aa23658b90470a78d686344b8a9b0e7
round  5:a2c537899665113a42f1ac24773bdc31
Key [ 9]:137dee3bf879fe7bd02fe6d888e84f16
Key [10]:466e315a1863f47d0f93bc6827cf3450
round  6:e26982980d79b21ed3e20f8c3e71ba96
Key [11]:0b33cf831465bb5c979e6224d7f79f7c
Key [12]:92770660268ede827810d707a0977d73
```

```
round  7:e7b063c4e2e3110b89b7e1631c762dd5
Key [13]:7be30ae4961cf24ca17625a77bb7a9f8
Key [14]:be65574a33ae30e6e82dbd2826d3cc1a
round  8:7a963e37b2c2e76b489cfe40a2cf00e5
Key [15]:ed0ba7dd30d60a5e69225f0a33011e5b
Key [16]:765c990f4445e52b39e6ed6105ad1c4f
Key [17]:52627bf9f35d94f30d5b07ef15901adc
Ka      :9cde4b60f9b5861ed9df80858bac6f7f


========================================
```

10.4 TESTS OF E22 WITH PIN AUGMENTING

for PIN lengths 1,...,16 bytes

```
rand    :24b101fd56117d42c0545a4247357048
PIN length =16 octets
PIN     :fd397c7f5c1f937cdf82d8816cc377e2
round  1:24b101fd56117d42c0545a4247357058
Key [ 1]:fd397c7f5c1f937cdf82d8816cc377e2
Key [ 2]:0f7aac9c9b53f308d9fdbf2c78e3c30e
round  2:838edfe1226266953ccba8379d873107
Key [ 3]:0b8ac18d4bb44fad2efa115e43945abc
Key [ 4]:887b16b062a83bfa469772c25b456312
round  3:8cd0c9283120aba89a7f9d635dd4fe3f
added ->:a881cad5673128ea5ad3f7211a096e67
Key [ 5]:2248cbe6d299e9d3e8fd35a91178f65b
Key [ 6]:b92af6237385bd31f8fb57fb1bdd824e
round  4:2648d9c618a622b10ef80c4dbaf68b99
Key [ 7]:2bf5ffe84a37878ede2d4c30be60203b
Key [ 8]:c9cb6cec60cb8a8f29b99fcf3e71e40f
round  5:b5a7d9e96f68b14ccebf361de3914d0f
Key [ 9]:5c2f8a702e4a45575b103b0cce8a91c6
Key [10]:d453db0c9f9ddbd11e355d9a34d9b11b
round  6:632a091e7eefe1336857ddafd1ff3265
Key [11]:32805db7e59c5ed4acabf38d27e3fece
Key [12]:fde3a8eedfa3a12be09c1a8a00890fd7
round  7:048531e9fd3efa95910540150f8b137b
Key [13]:def07eb23f3a378f059039a2124bc4c2
Key [14]:2608c58f23d84a09b9ce95e5caac1ab4
round  8:461814ec7439d412d0732f0a6f799a6a
Key [15]:0a7ed16481a623e56ee1442ffa74f334
Key [16]:12add59aca0d19532f1516979954e369
Key [17]:dd43d02d39ffd6a386a4b98b4ac6eb23
Ka      :a5f2adf328e4e6a2b42f19c8b74ba884
----------------------------------------
rand    :321964061ac49a436f9fb9824ac63f8b
PIN length =15 octets
PIN     :ad955d58b6b8857820ac1262d617a6
address :0314c0642543
round  1:321964061ac49a436f9fb9824ac63f9b
```

Sample Data

```
Key [ 1]:ad955d58b6b8857820ac1262d617a603
Key [ 2]:f281736f68e3d30b2ac7c67f125dc416
round  2:7c4a4ece1398681f4bafd309328b7770
Key [ 3]:43c157f4c8b360387c32ab330f9c9aa8
Key [ 4]:3a3049945a298f6d076c19219c47c3cb
round  3:9672b00738bdfaf9bd92a855bc6f3afb
added ->:a48b1401228194bad23161d7f6357960
Key [ 5]:c8e2eaa6d73b7de18f3228ab2173bc69
Key [ 6]:8623f44488222e66a293677cf30bf2bb
round  4:9b30247aad3bf133712d034b46d21c68
Key [ 7]:f3e500902fba31db9bae50ef30e484a4
Key [ 8]:49d4b1137c18f4752dd9955a5a8d2f43
round  5:4492c25fda08083a768b4b5588966b23
Key [ 9]:9d59c451989e74785cc097eda7e42ab8
Key [10]:251de25f3917dcd99c18646107a641fb
round  6:21ae346635714d2623041f269978c0ee
Key [11]:80b8f78cb1a49ec0c3e32a238e60fddf
Key [12]:beb84f4d20a501e4a24ecfbde481902b
round  7:9b56a3d0f8932f20c6a77a229514fb00
Key [13]:852571b44f35fd9d9336d3c1d2506656
Key [14]:d0a0d510fb06ba76e69b8ee3ebc1b725
round  8:6cd8492b2fd31a86978bcdf644eb08a8
Key [15]:c7ffd523f32a874ed4a93430a25976de
Key [16]:16cdcb25e62964876d951fdcc07030d3
Key [17]:def32c0e12596f9582e5e3c52b303f52
Ka      :c0ec1a5694e2b48d54297911e6c98b8f
----------------------------------------
rand    :d4ae20c80094547d7051931b5cc2a8d6
PIN length =14 octets
PIN     :e1232e2c5f3b833b3309088a87b6
address :fabecc58e609
round  1:d4ae20c80094547d7051931b5cc2a8c6
Key [ 1]:e1232e2c5f3b833b3309088a87b6fabe
Key [ 2]:5f0812b47cd3e9a30d7707050fffa1f2
round  2:1f45f16be89794bef33e4547c9c0916a
Key [ 3]:77b681944763244ffa3cd71b248b79b5
Key [ 4]:e2814e90e04f485958ce58c9133e2be6
round  3:b10d2f4ac941035263cee3552d774d2f
added ->:65bb4f82c9d5572f131f764e7139f5e9
Key [ 5]:520acad20801dc639a2c6d66d9b79576
Key [ 6]:c72255cdb61d42be72bd45390dd25ba5
round  4:ead4dc34207b6ea721c62166e155aaad
Key [ 7]:ebf04c02075bf459ec9c3ec06627d347
Key [ 8]:a1363dd2812ee800a4491c0c74074493
round  5:f507944f3018e20586d81d7f326aae9d
Key [ 9]:b0b6ba79493dc833d7f425be7b8dadb6
Key [10]:08cd23e536b9b9b53e85eb004cba3111
round  6:fff450f4302a2b3571e8405e148346da
Key [11]:fec22374c6937dcd26171f4d2edfada3
Key [12]:0f1a8ef5979c69ff44f620c2e007b6e4
round  7:de558779589897f3402a90ee78c3f921
Key [13]:901fb66f0779d6aad0c0fba1fe812cb5
```

Sample Data

```
Key [14]:a0cab3cd15cd23603adc8d4474efb239
round  8:b2df0aa0c9f07fbbaa02f510a29cf540
Key [15]:18edc3f4296dd6f1dea13f7c143117a1
Key [16]:8d3d52d700a379d72ded81687f7546c7
Key [17]:5927badfe602f29345f840bb53e1dea6
Ka      :d7b39be13e3692c65b4a9e17a9c55e17
----------------------------------------
rand    :272b73a2e40db52a6a61c6520549794a
PIN length =13 octets
PIN     :549f2694f353f5145772d8ae1e
address :20487681eb9f
round  1:272b73a2e40db52a6a61c6520549795a
Key [ 1]:549f2694f353f5145772d8ae1e204876
Key [ 2]:42c855593d66b0c458fd28b95b6a5fbf
round  2:d7276dc8073f7677c31f855bde9501e2
Key [ 3]:75d0a69ae49a2da92e457d767879df52
Key [ 4]:b3aa7e7492971afaa0fb2b64827110df
round  3:71aae503831133d19bc452da4d0e409b
added ->:56d558a1671ee8fbf12518884857b9c1
Key [ 5]:9c8cf1604a98e9a503c342e272de5cf6
Key [ 6]:d35bc2df6b85540a27642106471057d9
round  4:f41a709c89ea80481aa3d2b9b2a9f8ca
Key [ 7]:b454dda74aeb4eff227ba48a58077599
Key [ 8]:bcba6aec050116aa9b7c6a9b7314d796
round  5:20fdda20f4a26b1bd38eb7f355a7be87
Key [ 9]:d41f8a9de0a716eb7167a1b6e321c528
Key [10]:53534499822477 82d168ab43f17bc4d8
round  6:a70e316997eeed49a5a9ef9ba5e913b5
Key [11]:32cbc9cf1a81e36a45153972347ce4ac
Key [12]:5747619006cf4ef834c749f2c4b9feb6
round  7:e66f2317a825f589f76b47b6aa6e73fb
Key [13]:f9b68beba0a09d2a570a7dc88cc3c3c2
Key [14]:55718f9a4f0b1f9484e8c6b186a41a4b
round  8:5f68f940440a9798e074776019804ada
Key [15]:4ecc29be1b4d78433f6aa30db974a7fb
Key [16]:8470a066ffb00cda7b08059599f919f5
Key [17]:f39a36d74e960a051e1ca98b777848f4
Ka      :9ac64309a37c25c3b4a584fc002a1618
----------------------------------------
rand    :7edb65f01a2f45a2bc9b24fb3390667e
PIN length =12 octets
PIN     :2e5a42797958557b23447ca8
address :04f0d2737f02
round  1:7edb65f01a2f45a2bc9b24fb3390666e
Key [ 1]:2e5a42797958557b23447ca804f0d273
Key [ 2]:18a97c856561eb23e71af8e9e1be4799
round  2:3436e12db8ffdc1265cb5a86da2fed0b
Key [ 3]:7c0908dcbc73201e17c4f7aa1ab8aec8
Key [ 4]:7cb58833602fbe4194c7cc797ce8c454
round  3:caed6af4226f67e4ad1914620803ef2a
added ->:b4c8cf04389eac4611b438993b935544
Key [ 5]:f4dce7d607b5234562d0ebb2267b08b8
```

Sample Data

```
Key [ 6]:560b75c5545751fd8fa99fa4346e654b
round  4:ee67c87d6f74bb75db98f68bff0192c1
Key [ 7]:32f10cefd8d3e6424c6f91f1437808af
Key [ 8]:a934a46045be30fb3be3a5f3f7b18837
round  5:792398dcbeb8d10bdb07ae3c819e943c
Key [ 9]:a0f12e97c677a0e8ac415cd2c8a7ca88
Key [10]:e27014c908785f5ca03e8c6a1da3bf13
round  6:e778b6e0c3e8e7edf90861c7916d97a8
Key [11]:1b4a4303bcc0b2e0f41c72d47654bd9f
Key [12]:4b1302a50046026d6c9054fc8387965a
round  7:1fafddc7efa5f04c1dec1869d3f2d9bb
Key [13]:58c334bb543d49eca562cdbe0280e0fc
Key [14]:bdb60d383c692d06476b76646c8dec48
round  8:3d7c326d074bd6aa222ea050f04a3c7f
Key [15]:78c0162506be0b5953e8403c01028f93
Key [16]:24d7dbbe834dbd7b67f57fcf0d39d60f
Key [17]:2e74f1f3331c0f6585e87b2f715e187e
Ka      :d3af4c81e3f482f062999dee7882a73b
----------------------------------------
rand    :26a92358294dce97b1d79ec32a67e81a
PIN length =11 octets
PIN     :05fbad03f52fa9324f7732
address :b9ac071f9d70
round  1:26a92358294dce97b1d79ec32a67e80a
Key [ 1]:05fbad03f52fa9324f7732b9ac071f9d
Key [ 2]:2504c9691c04a18480c8802e922098c0
round  2:0be20e3d76888e57b6bf77f97a8714fb
Key [ 3]:576b2791d1212bea8408212f2d43e77e
Key [ 4]:90ae36dcce8724adb618f912d1b27297
round  3:1969667060764453257d906b7e58bd5b
added ->:3f12892849c312c494542ea854bfa551
Key [ 5]:bc492c42c9e87f56ec31af5474e9226e
Key [ 6]:c135d1dbed32d9519acfb4169f3e1a10
round  4:ac404205118fe771e54aa6f392da1153
Key [ 7]:83ccbdbbaf17889b7d18254dc9252fa1
Key [ 8]:80b90a1767d3f2848080802764e21711
round  5:41795e89ae9a0cf776ffece76f47fd7a
Key [ 9]:cc24e4a86e8eed129118fd3d5223a1dc
Key [10]:7b1e9c0eb9dab083574be7b7015a62c9
round  6:29ca9e2f87ca00370ef1633505bfba4b
Key [11]:888e6d88cf4beb965cf7d4f32b696baa
Key [12]:6d642f3e5510b0b043a44daa2cf5eec0
round  7:81fc891c3c6fd99acc00028a387e2366
Key [13]:e224f85da2ab63a23e2a3a036e421358
Key [14]:c8dc22aaa739e2cb85d6a0c08226c7d0
round  8:e30b537e7a000e3d2424a9c0f04c4042
Key [15]:a969aa818c6b324bae391bedcdd9d335
Key [16]:6974b6f2f07e4c55f2cc0435c45bebd1
Key [17]:134b925ebd98e6b93c14aee582062fcb
Ka      :be87b44d079d45a08a71d15208c5cb50
----------------------------------------
rand    :0edef05327eab5262430f21fc91ce682
```

Sample Data

```
PIN length =10 octets
PIN     :8210e47390f3f48c32b3
address :7a3cdfe377d1
round  1:0edef05327eab5262430f21fc91ce692
Key [ 1]:8210e47390f3f48c32b37a3cdfe377d1
Key [ 2]:c6be4c3e425e749b620a94c779e33a7e
round  2:07ca3c7a7a6bcbc31d79a856d9cffc0e
Key [ 3]:2587cec2a4b8e4f996a9ed664350d5dd
Key [ 4]:70e4bf72834d9d3dbb7eb2c239216dc0
round  3:792ad2ac4e4559d1463714d2f161b6f4
added ->:7708c2ff692f0ef7626706cd387d9c66
Key [ 5]:6696e1e7f8ac037e1fff3598f0c164e2
Key [ 6]:23dbfe4d0b561bea08fbcef25e49b648
round  4:7d8c71a9d7fbdcbd851bdf074550b100
Key [ 7]:b03648acd021550edee904431a02f00c
Key [ 8]:cb169220b7398e8f077730aa4bf06baa
round  5:b6fcaa45064ffd557e4b7b30cfbb83e0
Key [ 9]:af602c2ba16a454649951274c2be6527
Key [10]:5d60b0a7a09d524143eca13ad680bc9c
round  6:b3416d391a0c26c558843debd0601e9e
Key [11]:9a2f39bfe558d9f562c5f09a5c3c0263
Key [12]:72cae8eebd7fabd9b1848333c2aab439
round  7:abe4b498d9c36ea97b8fd27d7f813913
Key [13]:15f27ea11e83a51645d487b81371d7dc
Key [14]:36083c8666447e03d33846edf444eb12
round  8:8032104338a945ba044d102eabda3b22
Key [15]:0a3a8977dd48f3b6c1668578befadd02
Key [16]:f06b6675d78ca0ee5b1761bdcdab516d
Key [17]:cbc8a7952d33aa0496f7ea2d05390b23
Ka      :bf0706d76ec3b11cce724b311bf71ff5
----------------------------------------
rand    :86290e2892f278ff6c3fb917b020576a
PIN length = 9 octets
PIN     :3dcdffcfd086802107
address :791a6a2c5cc3
round  1:86290e2892f278ff6c3fb917b0205765
Key [ 1]:3dcdffcfd086802107791a6a2c5cc33d
Key [ 2]:b4962f40d7bb19429007062a3c469521
round  2:1ec59ffd3065f19991872a7863b0ef02
Key [ 3]:eb9ede6787dd196b7e340185562bf28c
Key [ 4]:2964e58aacf7287d1717a35b100ae23b
round  3:f817406f1423fc2fe33e25152679eaaf
added ->:7e404e47861574d08f7dde02969941ca
Key [ 5]:6abf9a314508fd61e486fa4e376c3f93
Key [ 6]:6da148b7ee2632114521842cbb274376
round  4:e9c2a8fac22b8c7cf0c619e2b3f890ed
Key [ 7]:df889cc34fda86f01096d52d116e620d
Key [ 8]:5eb04b147dc39d1974058761ae7b73fc
round  5:444a8aac0efee1c02f8d38f8274b7b28
Key [ 9]:8426cc59eee391b2bd50cf8f1efef8b3
Key [10]:8b5d220a6300ade418da791dd8151941
round  6:9185f983db150b1bccab1e5c12eb63a1
```

Sample Data

```
Key [11]:82ba4ddef833f6a4d18b07aa011f2798
Key [12]:ce63d98794682054e73d0359dad35ec4
round  7:5eded2668f5916dfd036c09e87902886
Key [13]:da794357652e80c70ad8b0715dbe33d6
Key [14]:732ef2c0c3220b31f3820c375e27bb29
round  8:88a5291b4acbba009a85b7dd6a834b3b
Key [15]:3ce75a61d4b465b70c95d7ccd5799633
Key [16]:5df9bd2c3a17a840cdaafb76c171db7c
Key [17]:3f8364b089733d902bccb0cd3386846f
Ka      :cdb0cc68f6f6fbd70b46652de3ef3ffb
----------------------------------------
rand    :3ab52a65bb3b24a08eb6cd284b4b9d4b
PIN length = 8 octets
PIN     :d0fb9b6838d464d8
address :25a868db91ab
round  1:3ab52a65bb3b24a08eb6cd284b4b9d45
Key [ 1]:d0fb9b6838d464d825a868db91abd0fb
Key [ 2]:2573f47b49dad6330a7a9155b7ae8ba1
round  2:ad2ffdff408fcfab44941016a9199251
Key [ 3]:d2c5b8fb80cba13712905a589adaee71
Key [ 4]:5a3381511b338719fae242758dea0997
round  3:2ddc17e570d7931a2b1d13f6ace928a5
added ->:17914180cb12b7baa5d3e0dee734c5e0
Key [ 5]:e0a4d8ac27fbe2783b7bcb3a36a6224d
Key [ 6]:949324c6864deac3eca8e324853e11c3
round  4:62c1db5cf31590d331ec40ad692e8df5
Key [ 7]:6e67148088a01c2d4491957cc9ddc4aa
Key [ 8]:557431deab7087bb4c03fa27228f60c6
round  5:9c8933bc361f4bde4d1bda2b5f8bb235
Key [ 9]:a2551aca53329e70ade3fd2bb7664697
Key [10]:05d0ad35de68a364b54b56e2138738fe
round  6:9156db34136aa06655bf28a05be0596a
Key [11]:1616a6b13ce2f2895c722e8495181520
Key [12]:b12e78a1114847b01f6ed2f5a1429a23
round  7:84dcc292ed836c1c2d523f2a899a2ad5
Key [13]:316e144364686381944e95afd8a026bb
Key [14]:1ab551b88d39d97ea7a9fe136dbfe2e1
round  8:87bdcac878d777877f4eccf042cfee5e
Key [15]:70e21ab08c23c7544524b64492b25cc9
Key [16]:35f730f2ae2b950a49a1bf5c8b9f8866
Key [17]:2f16924c22db8b74e2eadf1ba4ebd37c
Ka      :983218718ca9aa97892e312d86dd9516
----------------------------------------
rand    :a6dc447ff08d4b366ff96e6cf207e179
PIN length = 7 octets
PIN     :9c57e10b4766cc
address :54ebd9328cb6
round  1:a6dc447ff08d4b366ff96e6cf207e174
Key [ 1]:9c57e10b4766cc54ebd9328cb69c57e1
Key [ 2]:00a609f4d61db26993c8177e3ee2bba8
round  2:1ed26b96a306d7014f4e5c9ee523b73d
Key [ 3]:646d7b5f9aaa528384bda3953b542764
```

Sample Data

```
Key [ 4]:a051a42212c0e9ad5c2c248259aca14e
round  3:a53f526db18e3d7d53edbfc9711041ed
added ->:031b9612411b884b3ce62da583172299
Key [ 5]:d1bd5e64930e7f838d8a33994462d8b2
Key [ 6]:5dc7e2291e32435665ebd6956bec3414
round  4:9438be308ec83f35c560e2796f4e0559
Key [ 7]:10552f45af63b0f15e2919ab37f64fe7
Key [ 8]:c44d5717c114a58b09207392ebe341f8
round  5:b79a7b14386066d339f799c40479cb3d
Key [ 9]:6886e47b782325568eaf59715a75d8ff
Key [10]:8e1e335e659cd36b132689f78c147bda
round  6:ef232462228aa166438d10c34e17424b
Key [11]:8843efeedd5c2b7c3304d647f932f4d1
Key [12]:13785aaedd0adf67abb4f01872392785
round  7:02d133fe40d15f1073673b36bba35abd
Key [13]:837d7ca2722419e6be3fae35900c3958
Key [14]:93f8442973e7fccf2e7232d1d057c73a
round  8:275506a3d08c84e94cc58ed60054505e
Key [15]:8a7a9edffa3c52918bc6a45f57d91f5d
Key [16]:f214a95d777f763c56109882c4b52c84
Key [17]:10e2ee92c5ea1ddc5eb010e55510c403
Ka      :9cd6650ead86323e87cafb1ff516d1e0
----------------------------------------
rand    :3348470a7ea6cc6eb81b40472133262c
PIN length = 6 octets
PIN     :fcad169d7295
address :430d572f8842
round  1:3348470a7ea6cc6eb81b404721332620
Key [ 1]:fcad169d7295430d572f8842fcad169d
Key [ 2]:b3479d4d4fd178c43e7bc5b0c7d8983c
round  2:af976da9225066d563e10ab955e6fc32
Key [ 3]:7112462b37d82dd81a2a35d9eb43cb7c
Key [ 4]:c5a7030f8497945ac7b84600d1d161fb
round  3:d08f826ebd55a0bd7591c19a89ed9bde
added ->:e3d7c964c3fb6cd3cdac01dda820c1fe
Key [ 5]:84b0c6ef4a63e4dff19b1f546d683df5
Key [ 6]:f4023edfc95d1e79ed4bb4de9b174f5d
round  4:6cd952785630dfc7cf81eea625e42c5c
Key [ 7]:ea38dd9a093ac9355918632c90c79993
Key [ 8]:dbba01e278ddc76380727f5d7135a7de
round  5:93573b2971515495978264b88f330f7f
Key [ 9]:d4dc3a31be34e412210fafa6eca00776
Key [10]:39d1e190ee92b0ff16d92a8be58d2fa0
round  6:b3f01d5e7fe1ce6da7b46d8c389baf47
Key [11]:1eb081328d4bcf94c9117b12c5cf22ac
Key [12]:7e047c2c552f9f1414d946775fabfe30
round  7:0b833bff6106d5bae033b4ce5af5a924
Key [13]:e78e685d9b2a7e29e7f2a19d1bc38ebd
Key [14]:1b582272a3121718c4096d2d8602f215
round  8:23de0bbdc70850a7803f4f10c63b2c0f
Key [15]:8569e860530d9c3d48a0870dac33f676
Key [16]:6966b528fdd1dc222527052c8f6cf5a6
```

Sample Data

```
Key [17]:a34244c757154c53171c663b0b56d5c2
Ka      :98f1543ab4d87bd5ef5296fb5e3d3a21
----------------------------------------
rand    :0f5bb150b4371ae4e5785293d22b7b0c
PIN length = 5 octets
PIN     :b10d068bca
address :b44775199f29
round  1:0f5bb150b4371ae4e5785293d22b7b07
Key [ 1]:b10d068bcab44775199f29b10d068bca
Key [ 2]:aec70d1048f1bbd2c18040318a8402ad
round  2:342d2b79d7fb7cd110379742b9842c79
Key [ 3]:6d8d5cf338f29ef4420639ef488e4fa9
Key [ 4]:a1584117541b759ba6d9f7eb2bedcbba
round  3:9407e8e3e810603921bf81cfda62770a
added ->:9b6299b35c477addc437d35c088df20d
Key [ 5]:09a20676666aeed6f22176274eb433f4
Key [ 6]:840472c001add5811a054be5f5c74754
round  4:9a3ba953225a7862c0a842ed3d0b2679
Key [ 7]:fad9e45c8bf70a972fcd9bff0e8751f5
Key [ 8]:e8f30ff666dfd212263416496ff3b2c2
round  5:2c573b6480852e875df34b28a5c44509
Key [ 9]:964cdba0cf8d593f2fc40f96daf8267a
Key [10]:bcd65c11b13e1a70bcd4aafba8864fe3
round  6:21b0cc49e880c5811d24dee0194e6e9e
Key [11]:468c8548ea9653c1a10df6288dd03c1d
Key [12]:5d252d17af4b09d3f4b5f7b5677b8211
round  7:e6d6bdcd63e1d37d9883543ba86392fd
Key [13]:e814bf307c767428c67793dda2df95c7
Key [14]:4812b979fdc20f0ff0996f61673a42cc
round  8:e3dde7ce6bd7d8a34599aa04d6a760ab
Key [15]:5b1e2033d1cd549fc4b028146eb5b3b7
Key [16]:0f284c14fb8fe706a5343e3aa35af7b1
Key [17]:b1f7a4b7456d6b577fded6dc7a672e37
Ka      :c55070b72bc982adb972ed05d1a74ddb
----------------------------------------
rand    :148662a4baa73cfadb55489159e476e1
PIN length = 4 octets
PIN     :fb20f177
address :a683bd0b1896
round  1:148662a4baa73cfadb55489159e476eb
Key [ 1]:fb20f177a683bd0b1896fb20f177a683
Key [ 2]:47266cefbfa468ca7916b458155dc825
round  2:3a942eb6271c3f4e433838a5d3fcbd27
Key [ 3]:688853a6d6575eb2f6a2724b0fbc133b
Key [ 4]:7810df048019634083a2d9219d0b5fe0
round  3:9c835b98a063701c0887943596780769
added ->:8809bd3c1a0aace6d3dcdca4cf5c7d82
Key [ 5]:c78f6dcf56da1bbd413828b33f5865b3
Key [ 6]:eb3f3d407d160df3d293a76d1a513c4a
round  4:7e68c4bafa020a4a59b5a1968105bab5
Key [ 7]:d330e038d6b19d5c9bb0d7285a360064
Key [ 8]:9bd3ee50347c00753d165faced702d9c
```

Sample Data

```
round  5:227bad0cf0838bdb15b3b3872c24f592
Key [ 9]:9543ad0fb3fe74f83e0e2281c6d4f5f0
Key [10]:746cd0383c17e0e80e6d095a87fd0290
round  6:e026e98c71121a0cb739ef6f59e14d26
Key [11]:fa28bea4b1c417536608f11f406ea1dd
Key [12]:3aee0f4d21699df9cb8caf5354a780ff
round  7:cd6a6d8137d55140046f8991da1fa40a
Key [13]:372b71bc6d1aa6e785358044fbcf05f4
Key [14]:00a01501224c0405de00aa2ce7b6ab04
round  8:52cd7257fe8d0c782c259bcb6c9f5942
Key [15]:c7015c5c1d7c030e00897f104a006d4a
Key [16]:260a9577790c62e074e71e19fd2894df
Key [17]:c041b7a231493acd15ddcdaee94b9f52
Ka      :7ec864df2f1637c7e81f2319ae8f4671
----------------------------------------
rand    :193a1b84376c88882c8d3b4ee93ba8d5
PIN length = 3 octets
PIN     :a123b9
address :4459a44610f6
round  1:193a1b84376c88882c8d3b4ee93ba8dc
Key [ 1]:a123b94459a44610f6a123b94459a446
Key [ 2]:5f64d384c8e990c1d25080eb244dde9b
round  2:3badbd58f100831d781ddd3ccedefd3f
Key [ 3]:5abc00eff8991575c00807c48f6dbea5
Key [ 4]:127521158ad6798fb6479d1d2268abe6
round  3:0b53075a49c6bf2df2421c655fdedf68
added ->:128d22de7e3247a5decf572bb61987b4
Key [ 5]:f2a1f620448b8e56665608df2ab3952f
Key [ 6]:7c84c0af02aad91dc39209c4edd220b1
round  4:793f4484fb592e7a78756fd4662f990d
Key [ 7]:f6445b647317e7e493bb92bf6655342f
Key [ 8]:3cae503567c63d3595eb140ce60a84c0
round  5:9e46a8df925916a342f299a8306220a0
Key [ 9]:734ed5a806e072bbecb4254993871679
Key [10]:cda69ccb4b07f65e3c8547c11c0647b8
round  6:6bf9cd82c9e1be13fc58eae0b936c75a
Key [11]:c48e531d3175c2bd26fa25cc8990e394
Key [12]:6d93d349a6c6e9ff5b26149565b13d15
round  7:e96a9871471240f198811d4b8311e9a6
Key [13]:5c4951e85875d663526092cd4cbdb667
Key [14]:f19f7758f5cde86c3791efaf563b3fd0
round  8:e94ca67d3721d5fb08ec069191801a46
Key [15]:bf0c17f3299b37d984ac938b769dd394
Key [16]:7edf4ad772a6b9048588f97be25bde1c
Key [17]:6ee7ba6afefc5b561abbd8d6829e8150
Ka      :ac0daabf17732f632e34ef193658bf5d
----------------------------------------
rand    :1453db4d057654e8eb62d7d62ec3608c
PIN length = 2 octets
PIN     :3eaf
address :411fbbb51d1e
round  1:1453db4d057654e8eb62d7d62ec36084
```

Sample Data

```
Key [ 1]:3eaf411fbbb51d1e3eaf411fbbb51d1e
Key [ 2]:c3a1a997509f00fb4241aba607109c64
round  2:0b78276c1ebc65707d38c9c5fa1372bd
Key [ 3]:3c729833ae1ce7f84861e4dbad6305cc
Key [ 4]:c83a43c3a66595cb8136560ed29be4ff
round  3:23f3f0f6441563d4c202cee0e5cb2335
added ->:3746cbbb418bb73c2964a536cb8e83b1
Key [ 5]:18b26300b86b70acdd1c8f5cbc7c5da8
Key [ 6]:04efc75309b98cd8f1cef5513c18e41e
round  4:c61afa90d3c14bdf588320e857afdc00
Key [ 7]:517c789cecadc455751af73198749fb8
Key [ 8]:fd9711f913b5c844900fa79dd765d0e2
round  5:a8a0e02ceb556af8bfa321789801183a
Key [ 9]:bb5cf30e7d3ceb930651b1d16ee92750
Key [10]:3d97c7862ecab42720e984972f8efd28
round  6:0b58e922438d224db34b68fca9a5ea12
Key [11]:4ce730344f6b09e449dcdb64cd466666
Key [12]:38828c3a56f922186adcd9b713cdcc31
round  7:b90664c4ac29a8b4bb26debec9ffc5f2
Key [13]:d30fd865ea3e9edcff86a33a2c319649
Key [14]:1fdb63e54413acd968195ab6fa424e83
round  8:6934de3067817cefd811abc5736c163b
Key [15]:a16b7c655bbaa262c807cba8ae166971
Key [16]:7903dd68630105266049e23ca607cda7
Key [17]:888446f2d95e6c2d2803e6f4e815ddc9
Ka      :1674f9dc2063cc2b83d3ef8ba692ebef
----------------------------------------
rand    :1313f7115a9db842fcedc4b10088b48d
PIN length = 1 octets
PIN     :6d
address :008aa9be62d5
round  1:1313f7115a9db842fcedc4b10088b48a
Key [ 1]:6d008aa9be62d56d008aa9be62d56d00
Key [ 2]:46ebfeafb6657b0a1984a8dc0893accf
round  2:839b23b83b5701ab095bafd162ec0ac7
Key [ 3]:8e15595edcf058af62498ee3c1dc6098
Key [ 4]:dd409c3444e94b9cc08396ae967542a0
round  3:c0a2010cc44f2139427f093f4f97ae68
added ->:d3b5f81d9eecd97bbe6ccd8e4f1f62e2
Key [ 5]:487deff5d519f6a6481e947b926f633c
Key [ 6]:5b4b6e3477ed5c2c01f6e607d3418963
round  4:1a5517a0efad3575931d8ea3bee8bd07
Key [ 7]:34b980088d2b5fd6b6a2aceeda99c9c4
Key [ 8]:e7d06d06078acc4ecdbc8da800b73078
round  5:d3ce1fdfe716d72c1075ff37a8a2093f
Key [ 9]:7d375bad245c3b757380021af8ecd408
Key [10]:14dac4bc2f4dc4929a6cceec47f4c3a3
round  6:47e90cb55be6e8dd0f583623c2f2257b
Key [11]:66cfda3c63e464b05e2e7e25f8743ad7
Key [12]:77cfccda1ad380b9fdf1df10846b50e7
round  7:f866ae6624f7abd4a4f5bd24b04b6d43
Key [13]:3e11dd84c031a470a8b66ec6214e44cf
```

```
Key [14]:2f03549bdb3c511eea70b65ddbb08253
round  8:02e8e17cf8be4837c9c40706b613dfa8
Key [15]:e2f331229ddfcc6e7bea08b01ab7e70c
Key [16]:b6b0c3738c5365bc77331b98b3fba2ab
Key [17]:f5b3973b636119e577c5c15c87bcfd19
Ka      :38ec0258134ec3f08461ae5c328968a1

========================================
```

10.5 FOUR TESTS OF E3

```
rand    :00000000000000000000000000000000
aco     :48afcdd4bd40fef76693b113
key     :00000000000000000000000000000000
round  1:00000000000000000000000000000000
Key [ 1]:00000000000000000000000000000000
Key [ 2]:4697b1baa3b7100ac537b3c95a28ac64
round  2:78d19f9307d2476a523ec7a8a026042a
Key [ 3]:ecabaac66795580df89af66e66dc053d
Key [ 4]:8ac3d8896ae9364943bfebd4969b68a0
round  3:600265247668dda0e81c07bbb30ed503
Key [ 5]:5d57921fd5715cbb22c1be7bbc996394
Key [ 6]:2a61b8343219fdfb1740e6511d41448f
round  4:d7552ef7cc9dbde568d80c2215bc4277
Key [ 7]:dd0480dee731d67f01a2f739da6f23ca
Key [ 8]:3ad01cd1303e12a1cd0fe0a8af82592c
round  5:fb06bef32b52ab8f2a4f2b6ef7f6d0cd
Key [ 9]:7dadb2efc287ce75061302904f2e7233
Key [10]:c08dcfa981e2c4272f6c7a9f52e11538
round  6:b46b711ebb3cf69e847a75f0ab884bdd
Key [11]:fc2042c708e409555e8c147660ffdfd7
Key [12]:fa0b21001af9a6b9e89e624cd99150d2
round  7:c585f308ff19404294f06b292e978994
Key [13]:18b40784ea5ba4c80ecb48694b4e9c35
Key [14]:454d54e5253c0c4a8b3fcca7db6baef4
round  8:2665fadb13acf952bf74b4ab12264b9f
Key [15]:2df37c6d9db52674f29353b0f011ed83
Key [16]:b60316733b1e8e70bd861b477e2456f1
Key [17]:884697b1baa3b7100ac537b3c95a28ac
round  1:5d3ecb17f26083df0b7f2b9b29aef87c
Key [ 1]:e9e5dfc1b3a79583e9e5dfc1b3a79583
Key [ 2]:7595bf57e0632c59f435c16697d4c864
round  2:de6fe85c5827233fe22514a16f321bd8
Key [ 3]:e31b96afcc75d286ef0ae257cbbc05b7
Key [ 4]:0d2a27b471bc0108c6263aff9d9b3b6b
round  3:7cd335b50d09d139ea6702623af85edb
added ->:211100a2ff6954e6e1e62df913a656a7
Key [ 5]:98d1eb5773cf59d75d3b17b3bc37c191
Key [ 6]:fd2b79282408ddd4ea0aa7511133336f
round  4:991dccb3201b5b1c4ceff65a3711e1e9
Key [ 7]:331227756638a41d57b0f7e071ee2a98
```

Sample Data

```
Key [ 8]:aa0dd8cc68b406533d0f1d64aabacf20
round  5:18768c7964818805fe4c6ecae8a38599
Key [ 9]:669291b0752e63f806fce76f10e119c8
Key [10]:ef8bdd46be8ee0277e9b78adef1ec154
round  6:82f9aa127a72632af43d1a17e7bd3a09
Key [11]:f3902eb06dc409cfd78384624964bf51
Key [12]:7d72702b21f97984a721c99b0498239d
round  7:1543d7870bf2d6d6efab3cbf62dca97d
Key [13]:532e60bceaf902c52a06c2c283ecfa32
Key [14]:181715e5192efb2a64129668cf5d9dd4
round  8:eee3e8744a5f8896de95831ed837ffd5
Key [15]:83017c1434342d4290e961578790f451
Key [16]:2603532f365604646ff65803795ccce5
Key [17]:882f7c907b565ea58dae1c928a0dcf41
kc      :cc802aecc7312285912e90af6a1e1154
----------------------------------------
rand    :950e604e655ea3800fe3eb4a28918087
aco     :68f4f472b5586ac5850f5f74
key     :34e86915d20c485090a6977931f96df5
round  1:950e604e655ea3800fe3eb4a28918087
Key [ 1]:34e86915d20c485090a6977931f96df5
Key [ 2]:8de2595003f9928efaf37e5229935bdb
round  2:d46f5a04c967f55840f83d1cdb5f9afc
Key [ 3]:46f05ec979a97cb6ddf842ecc159c04a
Key [ 4]:b468f0190a0a83783521deae8178d071
round  3:e16ededе9cb6297f32e1203e442ac73a
Key [ 5]:8a171624dedbd552356094daaadcf12a
Key [ 6]:3085e07c85e4b99313f6e0c837b5f819
round  4:805144e55e1ece96683d23366fc7d24b
Key [ 7]:fe45c27845169a66b679b2097d147715
Key [ 8]:44e2f0c35f64514e8bec66c5dc24b3ad
round  5:edbaf77af070bd22e9304398471042f1
Key [ 9]:0d534968f3803b6af447eaf964007e7b
Key [10]:f5499a32504d739ed0b3c547e84157ba
round  6:0dab1a4c846aef0b65b1498812a73b50
Key [11]:e17e8e456361c46298e6592a6311f3fb
Key [12]:ec6d14da05d60e8abac807646931711f
round  7:1e7793cac7f55a8ab48bd33bc9c649e0
Key [13]:2b53dde3d89e325e5ff808ed505706ae
Key [14]:41034e5c3fb0c0d4f445f0cf23be79b0
round  8:3723768baa78b6a23ade095d995404da
Key [15]:e2ca373d405a7abf22b494f28a6fd247
Key [16]:74e09c9068c0e8f1c6902d1b70537c30
Key [17]:767a7f1acf75c3585a55dd4a428b2119
round  1:39809afb773efd1b7510cd4cb7c49f34
Key [ 1]:1d0d48d485abddd3798b483a82a0f878
Key [ 2]:aed957e600a5aed5217984dd5fef6fd8
round  2:6436ddbabe92655c87a7d0c12ae5e5f6
Key [ 3]:fee00bb0de89b6ef0a289696a4faa884
Key [ 4]:33ce2f4411db4dd9b7c42cc586b8a2ba
round  3:cec690f7e0aa5f063062301e049a5cc5
added ->:f7462a0c97e85c1d4572fd52b35efbf1
```

Sample Data

```
Key [ 5]:b5116f5c6c29e05e4acb4d02a46a3318
Key [ 6]:ff4fa1f0f73d1a3c67bc2298abc768f9
round  4:dcdfe942e9f0163fc24a4718844b417d
Key [ 7]:5453650c0819e001e48331ad0e9076e0
Key [ 8]:b4ff8dda778e26c0dce08349b81c09a1
round  5:265a16b2f766afae396e7a98c189fda9
Key [ 9]:f638fa294427c6ed94300fd823b31d10
Key [10]:1ccfa0bd86a9879b17d4bc457e3e03d6
round  6:628576b5291d53d1eb8611c8624e863e
Key [11]:0eaee2ef4602ac9ca19e49d74a76d335
Key [12]:6e1062f10a16e0d378476da3943842e9
round  7:d7b9c2e9b2d5ea5c27019324cae882b3
Key [13]:40be960bd22c744c5b23024688e554b9
Key [14]:95c9902cb3c230b44d14ba909730d211
round  8:97fb6065498385e47eb3df6e2ca439dd
Key [15]:10d4b6e1d1d6798aa00aa2951e32d58d
Key [16]:c5d4b91444b83ee578004ab8876ba605
Key [17]:1663a4f98e2862eddd3ec2fb03dcc8a4
kc      :c1beafea6e747e304cf0bd7734b0a9e2
----------------------------------------
rand    :6a8ebcf5e6e471505be68d5eb8a3200c
aco     :658d791a9554b77c0b2f7b9f
key     :35cf77b333c294671d426fa79993a133
round  1:6a8ebcf5e6e471505be68d5eb8a3200c
Key [ 1]:35cf77b333c294671d426fa79993a133
Key [ 2]:c4524e53b95b4bf2d7b2f095f63545fd
round  2:ade94ec585db0d27e17474b58192c87a
Key [ 3]:c99776768c6e9f9dd3835c52cea8d18a
Key [ 4]:f1295db23823ba2792f21217fc01d23f
round  3:da8dc1a10241ef9e6e069267cd2c6825
Key [ 5]:9083db95a6955235bbfad8aeefec5f0b
Key [ 6]:8bab6bc253d0d0c7e0107feab728ff68
round  4:e6665ca0772ceecbc21222ff7be074f8
Key [ 7]:2fa1f4e7a4cf3ccd876ec30d194cf196
Key [ 8]:267364be247184d5337586a19df8bf84
round  5:a857a9326c9ae908f53fee511c5f4242
Key [ 9]:9aef21965b1a6fa83948d107026134c7
Key [10]:d2080c751def5dc0d8ea353cebf7b973
round  6:6678748a1b5f21ac05cf1b117a7c342f
Key [11]:d709a8ab70b0d5a2516900421024b81e
Key [12]:493e4843805f1058d605c8d1025f8a56
round  7:766c66fe9c460bb2ae39ec01e435f725
Key [13]:b1ed21b71daea03f49fe74b2c11fc02b
Key [14]:0e1ded7ebf23c72324a0165a698c65c7
round  8:396e0ff7b2b9b7a3b35c9810882c7596
Key [15]:b3bf4841dc92f440fde5f024f9ce8be9
Key [16]:1c69bc6c2994f4c84f72be8f6b188963
Key [17]:bb7b66286dd679a471e2792270f3bb4d
round  1:45654f2f26549675287200f07cb10ec9
Key [ 1]:1e2a5672e66529e4f427b0682a3a34b6
Key [ 2]:974944f1ce0037b1febcf61a2bc961a2
round  2:990cd869c534e76ed4f4af7b3bfbc6c8
```

Sample Data

```
Key [ 3]:8147631fb1ce95d624b480fc7389f6c4
Key [ 4]:6e90a2db33d284aa13135f3c032aa4f4
round  3:ceb662f875aa6b94e8192b5989abf975
added ->:8b1bb1d753fe01e1c08b2ba9f55c07bc
Key [ 5]:cbad246d24e36741c46401e6387a05f9
Key [ 6]:dcf52aaec5713110345a41342c566fc8
round  4:d4e000be5de78c0f56ff218f3c1df61b
Key [ 7]:8197537aa9d27e67d17c16b182c8ec65
Key [ 8]:d66e00e73d835927a307a3ed79d035d8
round  5:9a4603bdef954cfaade2052604bed4e4
Key [ 9]:71d46257ecc1022bcd312ce6c114d75c
Key [10]:f91212fa528379651fbd2c32890c5e5f
round  6:09a0fd197ab81eb933eece2fe0132dbb
Key [11]:283acc551591fadce821b02fb9491814
Key [12]:ca5f95688788e20d94822f162b5a3920
round  7:494f455a2e7a5db861ece816d4e363e4
Key [13]:ba574aef663c462d35399efb999d0e40
Key [14]:6267afc834513783fef1601955fe0628
round  8:37a819f91c8380fb7880e640e99ca947
Key [15]:fdcd9be5450eef0f8737e6838cd38e2b
Key [16]:8cfbd9b8056c6a1ce222b92b94319b38
Key [17]:4f64c1072c891c39eeb95e63318462e0
kc      :a3032b4df1cceba8adc1a04427224299
----------------------------------------
rand    :5ecd6d75db322c75b6afbd799cb18668
aco     :63f701c7013238bbf88714ee
key     :b9f90c53206792b1826838b435b87d4d
round  1:5ecd6d75db322c75b6afbd799cb18668
Key [ 1]:b9f90c53206792b1826838b435b87d4d
Key [ 2]:15f74bbbde4b9d1e08f858721f131669
round  2:72abb85fc80c15ec2b00d72873ef9ad4
Key [ 3]:ef7fb29f0b01f82706c7439cc52f2dab
Key [ 4]:3003a6aecdee06b9ac295cce30dcdb93
round  3:2f10bab93a0f73742183c68f712dfa24
Key [ 5]:5fcdbb3afdf7df06754c954fc6340254
Key [ 6]:ddaa90756635579573fe8ca1f93d4a38
round  4:183b145312fd99d5ad08e7ca4a52f04e
Key [ 7]:27ca8a7fc703aa61f6d7791fc19f704a
Key [ 8]:702029d8c6e42950762317e730ec5d18
round  5:cbad52d3a026b2e38b9ae6fefffecc32
Key [ 9]:ff15eaa3f73f4bc2a6ccfb9ca24ed9c5
Key [10]:034e745246cd2e2cfc3bda39531ca9c5
round  6:ce5f159d0a1acaacd9fb4643272033a7
Key [11]:0a4d8ff5673731c3dc8fe87e39a34b77
Key [12]:637592fab43a19ac0044a21afef455a2
round  7:8a49424a10c0bea5aba52dbbffcbcce8
Key [13]:6b3fde58f4f6438843cdbe92667622b8
Key [14]:a10bfa35013812f39bf2157f1c9fca4e
round  8:f5e12da0e93e26a5850251697ec0b917
Key [15]:2228fe5384e573f48fdd19ba91f1bf57
Key [16]:5f174db2bc88925c0fbc6b5485bafc08
Key [17]:28ff90bd0dc31ea2bb479feb7d8fe029
```

Sample Data

```
round  1:0c75eed2b54c1cfb9ff522daef94ed4d
Key [ 1]:a21ceb92d3c027326b4de775865fe8d0
Key [ 2]:26f64558a9f0a1652f765efd546f3208
round  2:48d537ac209a6aa07b70000016c602e8
Key [ 3]:e64f9ef630213260f1f79745a0102ae5
Key [ 4]:af6a59d7cebfd0182dcca9a537c4add8
round  3:8b6d517ac893743a401b3fb7911b64e1
added ->:87e23fa87ddf90c1df10616d7eaf51ac
Key [ 5]:9a6304428b45da128ab64c8805c32452
Key [ 6]:8af4d1e9d80cb73ec6b44e9b6e4f39d8
round  4:9f0512260a2f7a5067efc35bf1706831
Key [ 7]:79cc2d138606f0fca4e549c34a1e6d19
Key [ 8]:803dc5cdde0efdbee7a1342b2cd4d344
round  5:0cfd7856edfafac51f29e86365de6f57
Key [ 9]:e8fa996448e6b6459ab51e7be101325a
Key [10]:2acc7add7b294acb444cd933f0e74ec9
round  6:2f1fa34bf352dc77c0983a01e8b7d622
Key [11]:f57de39e42182efd6586b86a90c86bb1
Key [12]:e418dfd1bb22ebf1bfc309cd27f5266c
round  7:ee4f7a53849bf73a747065d35f3752b1
Key [13]:80a9959133856586370854db6e0470b3
Key [14]:f4c1bc2f764a0193749f5fc09011a1ae
round  8:8fec6f7249760ebf69e370e9a4b80a92
Key [15]:d036cef70d6470c3f52f1b5d25b0c29d
Key [16]:d0956af6b8700888a1cc88f07ad226dc
Key [17]:1ce8b39c4c7677373c30849a3ee08794
kc      :ea520cfc546b00eb7c3a6cea3ecb39ed

========================================
```

Core System Package [Controller volume]

Part H

SECURITY SPECIFICATION

This document describes the specification of the security system which may be used at the link layer. The Encryption, Authentication and Key Generation schemes are specified. The requirements for the supporting process of random number generation are also specified.

CONTENTS

1 Security Overview 921
1.1 Pausing Encryption and Role Switch 922
1.2 Change Connection Link Keys 922
1.3 Periodically Refreshing Encryption Keys 922
2 Random Number Generation 923
3 Key Management 925
3.1 Key Types 925
3.2 Key Generation and Initialization 927
3.2.1 Generation of initialization key, ... 928
3.2.2 Authentication 928
3.2.3 Generation of a unit key 928
3.2.4 Generation of a combination key 929
3.2.5 Generating the encryption key 930
3.2.6 Point-to-multipoint configuration 931
3.2.7 Modifying the link keys 931
3.2.8 Generating a master key 932
4 Encryption 934
4.1 Encryption Key Size Negotiation 935
4.2 Encryption of Broadcast Messages 935
4.3 Encryption Concept 936
4.4 Encryption Algorithm 937
4.4.1 The operation of the cipher 939
4.5 LFSR Initialization 940
4.6 Key Stream Sequence 943
5 Authentication 944
5.1 Repeated Attempts 946
6 The Authentication And Key-Generating Functions 947
6.1 The Authentication Function E1 947
6.2 The Functions Ar and A'r 949
6.2.1 The round computations 949
6.2.2 The substitution boxes "e" and "l" 949
6.2.3 Key scheduling 950
6.3 E2-Key Generation Function for Authentication 951
6.4 E3-Key Generation Function for Encryption 953
7 Secure Simple Pairing 954
7.1 Phase 1: Public Key Exchange 955
7.2 Phase 2: Authentication Stage 1 956

7.2.1 Authentication Stage 1: Numeric Comparison Protocol 956
7.2.2 Authentication Stage 1: Out of Band Protocol 958
7.2.3 Authentication Stage 1: Passkey Entry Protocol 960
7.3 Phase 3: Authentication Stage 2 962
7.4 Phase 4: Link Key Calculation 963
7.5 Phase 5: LMP Authentication and Encryption 963
7.6 Elliptic Curve Definition 963
7.7 Cryptographic Function Definitions 964
7.7.1 The Simple Pairing Commitment Function f1 964
7.7.2 The Simple Pairing Numeric Verification Function g ... 965
7.7.3 The Simple Pairing Key Derivation Function f2 966
7.7.4 The Simple Pairing Check Function f3 967
7.7.5 The Simple Pairing AMP Key Derivation Function h2 . 968

8 AMP Security 970
8.1 Creation of the Initial Generic AMP Link Key 970
8.2 Creation of Dedicated AMP Link Keys 970
8.3 Debug Considerations 971

9 List of Figures 973

10 List of Tables 974

1 SECURITY OVERVIEW

Bluetooth wireless technology provides peer-to-peer communications over short distances. In order to provide usage protection and information confidentiality, the system provides security measures both at the application layer and the link layer. These measures are designed to be appropriate for a peer environment. This means that in each device, the authentication and encryption routines are implemented in the same way. Four different entities are used for maintaining security at the link layer: a Bluetooth device address, two secret keys, and a pseudo-random number that shall be regenerated for each new transaction. The four entities and their sizes are summarized in Table 1.1.

Entity	Size
BD_ADDR	48 bits
Private user key, authentication	128 bits
Private user key, encryption configurable length (byte-wise)	8-128 bits
RAND	128 bits

Table 1.1: Entities used in authentication and encryption procedures.

The Bluetooth device address (BD_ADDR) is the 48-bit address. The BD_ADDR can be obtained via user interactions, or, automatically, via an inquiry routine by a device.

The secret keys are derived during initialization and are never disclosed. The encryption key is derived from the authentication key during the authentication process. For the authentication algorithm, the size of the key used is always 128 bits. For the encryption algorithm, the key size may vary between 1 and 16 octets (8 - 128 bits). The size of the encryption key is configurable for two reasons. The first has to do with the many different requirements imposed on cryptographic algorithms in different countries – both with respect to export regulations and official attitudes towards privacy in general. The second reason is to facilitate a future upgrade path for the security without the need of a costly redesign of the algorithms and encryption hardware; increasing the effective key size is the simplest way to combat increased computing power at the opponent side.

The encryption key is entirely different from the authentication key (even though the latter is used when creating the former, as is described in Section 6.4 on page 953). Each time encryption is activated, a new encryption key shall be generated. Thus, the lifetime of the encryption key does not necessarily correspond to the lifetime of the authentication key.

It is anticipated that the authentication key will be more static in its nature than the encryption key – once established, the particular application running on the device decides when, or if, to change it. To underline the fundamental impor-

tance of the authentication key to a specific link, it is often referred to as the link key.

The RAND is a pseudo-random number which can be derived from a random or pseudo-random process in the device. This is not a static parameter and will change frequently.

In the remainder of this chapter, the terms user and application are used interchangeably to designate the entity that is at either side.

1.1 PAUSING ENCRYPTION AND ROLE SWITCH

To perform a role switch on a connection encryption must be disabled or paused as the encryption is based off the master's clock and Bluetooth address information. Unfortunately, if the role switch is required, and encryption is turned off, the device on the other end of the link will not be aware of the reason for disabling encryption, and can therefore take two possible actions: send clear text data, or disconnect. Neither of these possible actions is desirable. When performing a role switch on an encrypted link, the role switch shall be performed as a single operation where possible. If this is not possible because the other device does not support the encryption pause feature, then when a device wishes to have an encrypted link, and encryption is disabled, then the device should not send any user data, and should not disconnect. If both devices support the encryption pause feature, then this procedure shall be used.

1.2 CHANGE CONNECTION LINK KEYS

It is possible to perform a change of connection link keys while a link is encrypted, but it is not possible to use the new link keys until encryption has been stopped and then restarted. As with role switches, disabling encryption and then re-enabling it again can cause user data to be sent in the clear or a disconnection to occur. The use of encryption pausing prevents this problem from occurring. On devices that do not support the encryption pause feature, when a device wishes to have an encrypted link, and encryption is disabled, then the device should not send any data, and should not disconnect. If both devices support the encryption pause feature, then this procedure shall be used.

1.3 PERIODICALLY REFRESHING ENCRYPTION KEYS

If both devices support the encryption pause feature, then the encryption keys shall be refreshed by the Link Manager at least once every 2^{28} Bluetooth Clocks (about 23.3 hours) if it is not refreshed by the Host or the remote Link Manager. To refresh an encryption key, the Host maybe use the Change Connection Link Key procedure or request an encryption key refresh. If the encryption key has not been refreshed before going stale, a device may disconnect the link.

2 RANDOM NUMBER GENERATION

Each device has a pseudo-random number generator. Pseudo-random numbers are used for many purposes within the security functions – for instance, for the challenge-response scheme, for generating authentication and encryption keys, nonces used in Simple Pairing, for Passkeys used in authentication.

$1/2^{L}$ A device shall use a pseudo random number generator compliant with [FIPS PUB 140-2] (http://csrc.nist.gov/publications/fips/fips140-2/fips1402annexc.pdf)

An example of a possible random generator is provided in [FIPS PUB 186-2] Appendix 3.1 (http://csrc.nist.gov/publications/fips/fips186-2/fips186-2-change1.pdf), which can be used by replacing SHA-1 function with the SHA-256 function

The device shall use a seed with at least the minimum entropy required by the pseudo random number generator.

The random number generator shall be tested against the [FIPS SP800-22] (http://csrc.nist.gov/rng/SP800-22b.pdf). This encompasses the verification of the following statistical tests performed on the output of the PRNG as specified by the [FIPS SP800-22]:

1. The Frequency (Monobit) Test
2. Frequency Test within a Block
3. The Runs Test
4. Test for the Longest-Run-of-Ones in a Block
5. The Binary Matrix Rank Test
6. The Discrete Fourier Transform (Spectral) Test
7. The Non-overlapping Template Matching Test
8. The Overlapping Template Matching Test
9. Maurer's "Universal Statistical" Test
10. The Lempel-Ziv Compression Test
11. The Linear Complexity Test
12. The Serial Test
13. The Approximate Entropy Test
14. The Cumulative Sums (Cusums) Test
15. The Random Excursions Test
16. The Random Excursions Variant Test

These tests are part of standard statistical mathematical packages. Some test suites, like the Diehard test suite can be used to verify the compliance. Alternatively, other tools, such as the DieHarder (http://www.phy.duke.edu/~rgb/General/rand_rate.php) or the available NIST tools (http://csrc.nist.gov/

CryptoToolkit/tkrng.html, http://csrc.nist.gov/rng) and the corresponding recommendations (http://csrc.nist.gov/rng/SP800-22b.pdf) may also be used.

3 KEY MANAGEMENT

It is important that the encryption key size within a specific device cannot be set by the user – this should be a factory preset entity. In order to prevent the user from over-riding the permitted key size, the Bluetooth baseband processing shall not accept an encryption key given from higher software layers. Whenever a new encryption key is required, it shall be created as defined in Section 6.4 on page 953.

Changing a link key shall also be done through the defined baseband procedures. Depending on what kind of link key it is, different approaches are required. The details are found in Section 3.2.7 on page 931.

3.1 KEY TYPES

The link key is a 128-bit random number which is shared between two or more parties and is the base for all security transactions between these parties. The link key itself is used in the authentication routine. Moreover, the link key is used as one of the parameters when the encryption key is derived.

In the following, a session is defined as the time interval for which the device is a member of a particular piconet. Thus, the session terminates when the device disconnects from the piconet.

The link keys are either semi-permanent or temporary. A semi-permanent link key may be stored in non-volatile memory and may be used after the current session is terminated. Consequently, once a semi-permanent link key is defined, it may be used in the authentication of several subsequent connections between the devices sharing it. The designation semi-permanent is justified by the possibility of changing it. How to do this is described in Section 3.2.7 on page 931.

The lifetime of a temporary link key is limited by the lifetime of the current session – it shall not be reused in a later session. Typically, in a point-to-multipoint configuration where the same information is to be distributed securely to several recipients, a common encryption key is useful. To achieve this, a special link key (denoted master key) may temporarily replace the current link keys. The details of this procedure are found in Section 3.2.6 on page 931.

In the following, the current link key is the link key in use at the current moment. It can be semi-permanent or temporary. Thus, the current link key is used for all authentications and all generation of encryption keys in the on-going connection (session).

In order to accommodate different types of applications, four types of link keys have been defined:

- the combination key K_{AB}
- the unit key K_A
- the temporary key K_{master}
- the initialization key K_{init}

Note: the use of unit keys is deprecated since it is implicitly insecure.

In addition to these keys there is an encryption key, denoted K_c. This key is derived from the current link key. Whenever encryption is activated by an LM command, the encryption key shall be changed automatically. The purpose of separating the authentication key and encryption key is to facilitate the use of a shorter encryption key without weakening the strength of the authentication procedure. There are no governmental restrictions on the strength of authentication algorithms. However, in some countries, such restrictions exist on the strength of encryption algorithms.

The combination key K_{AB} and the unit key K_A are functionally indistinguishable; the difference is in the way they are generated. The unit key K_A is generated in, and therefore dependent on, a single device A. The unit key shall be generated once at installation of the device; thereafter, it is very rarely changed. The combination key is derived from information in both devices A and B, and is therefore always dependent on two devices. The combination key is derived for each new combination of two devices.

It depends on the application or the device whether a unit key or a combination key is used. Devices which have little memory to store keys, or are installed in equipment that will be accessible to a large group of users, should use their own unit key. In that case, they only have to store a single key. Applications that require a higher security level should use the combination keys. These applications will require more memory since a combination key for each link to a different device has to be stored.

The master key, K_{master}, shall only be used during the current session. It shall only replace the original link key temporarily. For example, this may be utilized when a master wants to reach more than two devices simultaneously using the same encryption key, see Section 3.2.6 on page 931.

The initialization key, K_{init}, shall be used as the link key during the initialization process when no combination or unit keys have been defined and exchanged yet or when a link key has been lost. The initialization key protects the transfer of initialization parameters. The key is derived from a random number, an L-octet PIN code, and a BD_ADDR. This key shall only be used during initialization.

The PIN may be a fixed number provided with the device (for example when there is no user interface as in a PSTN plug). Alternatively, the PIN can be selected by the user, and then entered in both devices that are to be matched. The latter procedure should be used when both devices have a user interface, for example a phone and a laptop. Entering a PIN in both devices is more secure than using a fixed PIN in one of the devices, and should be used whenever possible. Even if a fixed PIN is used, it shall be possible to change the PIN; this is in order to prevent re-initialization by users who once obtained the PIN. If no PIN is available, a default value of zero may be used. The length of this default PIN is one byte, PIN (default) = 0x00. This default PIN may be provided by the host.

For many applications the PIN code will be a relatively short string of numbers. Typically, it may consist of only four decimal digits. Even though this gives sufficient security in many cases, there exist countless other, more sensitive, situations where this is not reliable enough. Therefore, the PIN code may be chosen to be any length from 1 to 16 octets. For the longer lengths, the devices exchanging PIN codes may not use mechanical (i.e. human) interaction, but rather may use software at the application layer. For example, this can be a Diffie-Hellman key agreement, where the exchanged key is passed on to the K_{init} generation process in both devices, just as in the case of a shorter PIN code.

3.2 KEY GENERATION AND INITIALIZATION

The link keys must be generated and distributed among the devices in order to be used in the authentication procedure. Since the link keys shall be secret, they shall not be obtainable through an inquiry routine in the same way as the Bluetooth device addresses. The exchange of the keys takes place during an initialization phase which shall be carried out separately for each two devices that are using authentication and encryption. The initialization procedures consist of the following five parts:

- generation of an initialization key
- generation of link key
- link key exchange
- authentication
- generation of encryption key in each device (optional)

After the initialization procedure, the devices can proceed to communicate, or the link can be disconnected. If encryption is implemented, the E_0 algorithm shall be used with the proper encryption key derived from the current link key. For any new connection established between devices A and B, they should use the common link key for authentication, instead of once more deriving K_{init} from the PIN. A new encryption key derived from that particular link key shall be created next time encryption is activated.

If no link key is available, the LM shall automatically start an initialization procedure.

3.2.1 Generation of initialization key, K_{init}

A link key is used temporarily during initialization, the initialization key K_{init}. This key shall be derived by the E_{22} algorithm from a BD_ADDR, a PIN code, the length of the PIN (in octets), and a random number IN_RAND. The principle is depicted in Figure 6.4 on page 953. The 128-bit output from E_{22} shall be used for key exchange during the generation of a link key. When the devices have performed the link key exchange, the initialization key shall be discarded.

When the initialization key is generated, the PIN is augmented with the BD_ADDR. If one device has a fixed PIN the BD_ADDR of the other device shall be used. If both devices have a variable PIN the BD_ADDR of the device that received IN_RAND shall be used. If both devices have a fixed PIN they cannot be paired. Since the maximum length of the PIN used in the algorithm cannot exceed 16 octets, it is possible that not all octets of BD_ADDR will be used. This procedure ensures that K_{init} depends on the identity of the device with a variable PIN. A fraudulent device may try to test a large number of PINs by claiming another BD_ADDR each time. It is the application's responsibility to take countermeasures against this threat. If the device address is kept fixed, the waiting interval before the next try may be increased exponentially (see Section 5.1 on page 946).

The details of the E_{22} algorithm can be found in Section 6.3 on page 951.

3.2.2 Authentication

The authentication procedure shall be carried out as described in Section 5 on page 944. During each authentication, a new AU_RAND_A shall be issued.

Mutual authentication is achieved by first performing the authentication procedure in one direction and then immediately performing the authentication procedure in the opposite direction.

As a side effect of a successful authentication procedure an auxiliary parameter, the Authenticated Ciphering Offset (ACO), will be computed. The ACO shall be used for ciphering key generation as described in Section 3.2.5 on page 930.

The claimant/verifier status is determined by the LM.

3.2.3 Generation of a unit key

A unit key K_A shall be generated when the device is in operation for the first time; i.e. not during each initialization. The unit key shall be generated by the E_{21} algorithm as described in Section 6.3 on page 951. Once created, the unit key should be stored in non-volatile memory and very rarely changed. If after initial-

ization the unit key is changed, any previously initialized devices will possess a wrong link key. At initialization, the application must determine which of the two parties will provide the unit key as the link key. Typically, this will be the device with restricted memory capabilities, since this device only has to remember its own unit key. The unit key shall be transferred to the other party and then stored as the link key for that particular party. So, for example in Figure 3.1 on page 929, the unit key of device A, K_A, is being used as the link key for the connection A-B; device A sends the unit key K_A to device B; device B will store K_A as the link key K_{BA}. For another initialization, for example with device C, device A will reuse its unit key K_A, whereas device C stores it as K_{CA}.

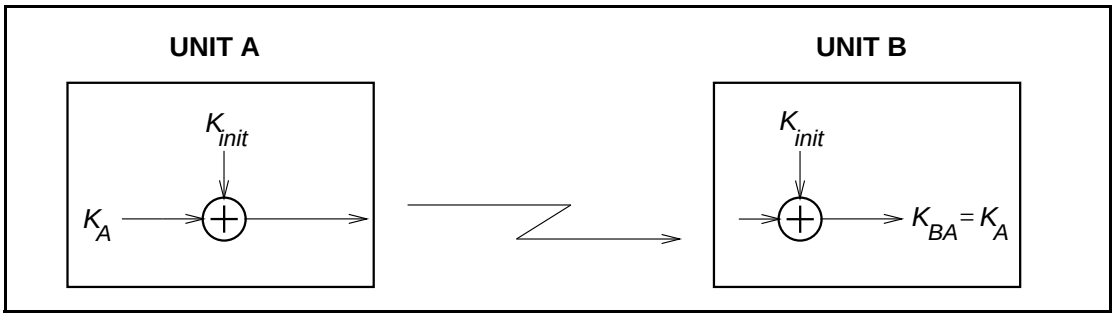

Figure 3.1: Generation of unit key. When the unit key has been exchanged, the initialization key is discarded in both devices.

3.2.4 Generation of a combination key

To use a combination key, it is first generated during the initialization procedure. The combination key is the combination of two numbers generated in device A and B, respectively. First, each device shall generate a random number, LK_RAND_A and LK_RAND_B. Then, utilizing E_{21} with the random number and their own BD_ADDRs, the two random numbers

$$LK_K_A = E_{21}(LK_RAND_A, BD_ADDR_A) \quad \text{(EQ 1)}$$

and

$$LK_K_B = E_{21}(LK_RAND_B, BD_ADDR_B), \quad \text{(EQ 2)}$$

shall be created in device A and device B, respectively. These numbers constitute the devices' contribution to the combination key that is to be created. Then, the two random numbers LK_RAND_A and LK_RAND_B shall be exchanged securely by XORing with the current link key, K. Thus, device A shall send $K \oplus LK_RAND_A$ to device B, while device B shall send $K \oplus LK_RAND_B$ to device A. If this is done during the initialization phase the link key $K = K_{init}$.

When the random numbers LK_RAND_A and LK_RAND_B have been mutually exchanged, each device shall recalculate the other device's contribution to the combination key. This is possible since each device knows the Bluetooth

device address of the other device. Thus, device A shall calculate (EQ 2) on page 929 and device B shall calculate (EQ 1) on page 929. After this, both devices shall combine the two numbers to generate the 128-bit link key. The combining operation is a simple bitwise modulo-2 addition (i.e. XOR). The result shall be stored in device A as the link key K_{AB} and in device B as the link key K_{BA}. When both devices have derived the new combination key, a mutual authentication procedure shall be initiated to confirm the success of the transaction. The old link key shall be discarded after a successful exchange of a new combination key. The message flow between master and slave and the principle for creating the combination key is depicted in Figure 3.2 on page 930.

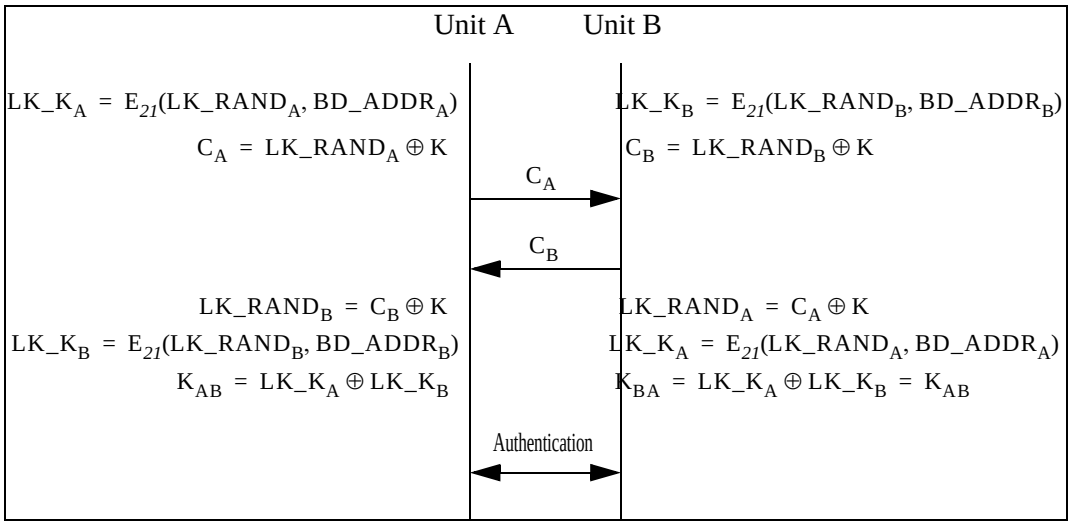

Figure 3.2: Generating a combination key. The old link key (K) is discarded after the exchange of a new combination key has succeeded

3.2.5 Generating the encryption key

The encryption key, K_C, is derived by algorithm E_3 from the current link key, a 96-bit Ciphering OFfset number (COF), and a 128-bit random number. The COF is determined in one of two ways. If the current link key is a master key, then COF shall be derived from the master BD_ADDR. Otherwise the value of COF shall be set to the value of ACO as computed during the authentication procedure. Therefore:[1]

$$\text{COF} = \begin{cases} \text{BD_ADDR} \cup \text{BD_ADDR}, & \text{if link key is a master key} \\ \text{ACO}, & \text{otherwise.} \end{cases} \quad \text{(EQ 3)}$$

There is an explicit call of E_3 when the LM activates encryption. Consequently, the encryption key is automatically changed each time the device enters

1. $x \cup y$ denotes the concatenation of x and y.

encryption mode. The details of the key generating function E_3 can be found in Section 6.4 on page 953.

3.2.6 Point-to-multipoint configuration

It is possible for the master to use separate encryption keys for each slave in a point-to-multipoint configuration with ciphering activated. Then, if the application requires more than one slave to listen to the same payload, each slave must be addressed individually. This can cause unwanted capacity loss for the piconet. Moreover, a slave might not be capable of switching between two or more encryption keys in real time (e.g., after looking at the LT_ADDR in the header). Thus, the master cannot use different encryption keys for broadcast messages and individually addressed traffic. Therefore, the master may tell several slave devices to use a common link key (and, hence, indirectly also to use a common encryption key) and may then broadcast the information encrypted. For many applications, this key is only of temporary interest. In the following discussion, this key is denoted by K_{master}.

The transfer of necessary parameters shall be protected by the routine described in Section 3.2.8 on page 932. After the confirmation of successful reception in each slave, the master shall issue a command to the slaves to replace their respective current link key by the new (temporary) master key. Before encryption can be activated, the master shall also generate and distribute a common EN_RAND to all participating slaves. Using this random number and the newly derived master key, each slave shall generate a new encryption key.

Note that the master must negotiate the encryption key length to use individually with each slave that will use the master key. If the master has already negotiated with some of these slaves, it has knowledge of the sizes that can be accepted. There may be situations where the permitted key lengths of some devices are incompatible. In that case, the master must exclude the limiting device from the group.

When all slaves have received the necessary data, the master can communicate information on the piconet securely using the encryption key derived from the new temporary link key. Each slave in possession of the master key can eavesdrop on all encrypted traffic, not only the traffic intended for itself. The master may tell all participants to fall back to their old link keys simultaneously.

3.2.7 Modifying the link keys

A link key based on a unit key can be changed. The unit key is created once during first use. Typically, the link key should be changed rather than the unit key, as several devices may share the same unit key as link key (e.g. a printer whose unit key is distributed to all users using the printer's unit key as link key). Changing the unit key will require re-initialization of all devices connecting.

Changing the unit key can be justified in some circumstances, e.g. to deny access to all previously allowed devices.

If the key change concerns combination keys, then the procedure is straightforward. The change procedure is identical to the procedure described in Figure 3.2 on page 930, using the current value of the combination key as link key. This procedure can be carried out at any time after the authentication and encryption start. Since the combination key corresponds to a single link, it can be modified each time this link is established. This will improve the security of the system since then old keys lose their validity after each session.

Starting up an entirely new initialization procedure is also possible. In that case, user interaction is necessary since a PIN will be required in the authentication and encryption procedures.

3.2.8 Generating a master key

The key-change routines described so far are semi-permanent. To create the master link key, which can replace the current link key during a session (see Section 3.2.6 on page 931), other means are needed. First, the master shall create a new link key from two 128-bit random numbers, RAND1 and RAND2. This shall be done by

$$K_{master} = E_{22}(RAND1, RAND2, 16). \quad \text{(EQ 4)}$$

This key is a 128-bit random number. The reason for using the output of E_{22} and not directly choosing a random number as the key, is to avoid possible problems with degraded randomness due to a poor implementation of the random number generator within the device.

Then, a third random number, RAND, shall be transmitted to the slave. Using E_{22} with the current link key and RAND as inputs, both the master and the slave shall compute a 128-bit overlay. The master shall send the bitwise XOR of the overlay and the new link key to the slave. The slave, who knows the overlay, shall recalculate K_{master}. To confirm the success of this transaction, the devices shall perform a mutual authentication procedure using the new link key. This procedure shall then be repeated for each slave that receives the new link key. The ACO values from the authentications shall not replace the current ACO, as this ACO is needed to (re)compute a ciphering key when the master falls back to the previous (non-temporary) link key.

The master activates encryption by an LM command. Before activating encryption, the master shall ensure that all slaves receive the same random number, EN_RAND, since the encryption key is derived through the means of E_3 individually in all participating devices. Each slave shall compute a new encryption key as follows:

$$K_C = E_3(K_{master}, EN_RAND, COF) \quad \text{(EQ 5)}$$

where the value of COF shall be derived from the master's BD_ADDR as specified by equation (EQ 3) on page 930. The details of the encryption key generating function are described in Section 6.4 on page 953. The message flow between the master and the slave when generating the master key is depicted in Figure 3.3. Note that in this case the ACO produced during the authentication is not used when computing the ciphering key.

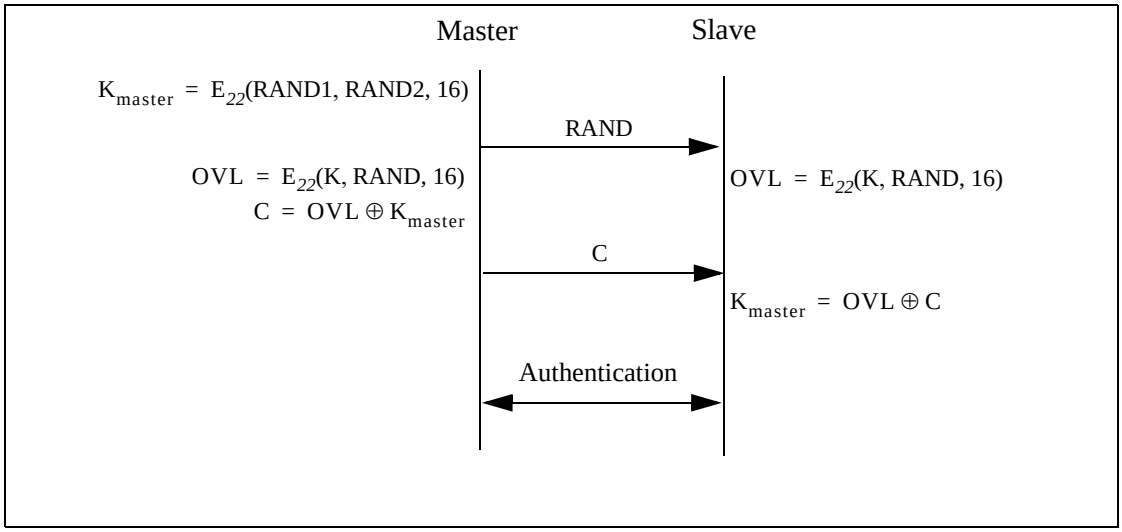

Figure 3.3: Master link key distribution and computation of the corresponding encryption key.

4 ENCRYPTION

User information can be protected by encryption of the packet payload; the access code and the packet header shall never be encrypted. The encryption of the payload shall be carried out with a stream cipher called E_0 that shall be re-synchronized for every payload. The overall principle is shown in Figure 4.1 on page 934.

The stream cipher system E_0 shall consist of three parts:

- the first part performs initialization (generation of the payload key). The payload key generator shall combine the input bits in an appropriate order and shall shift them into the four LFSRs used in the key stream generator.
- the second part generates the key stream bits and shall use a method derived from the summation stream cipher generator attributable to Massey and Rueppel. The second part is the main part of the cipher system, as it will also be used for initialization.
- the third part performs encryption and decryption.

The Massey and Rueppel method has been thoroughly investigated, and there exist good estimates of its strength with respect to presently known methods for cryptanalysis. Although the summation generator has weaknesses that can be used in correlation attacks, the high re-synchronization frequency will disrupt such attacks.

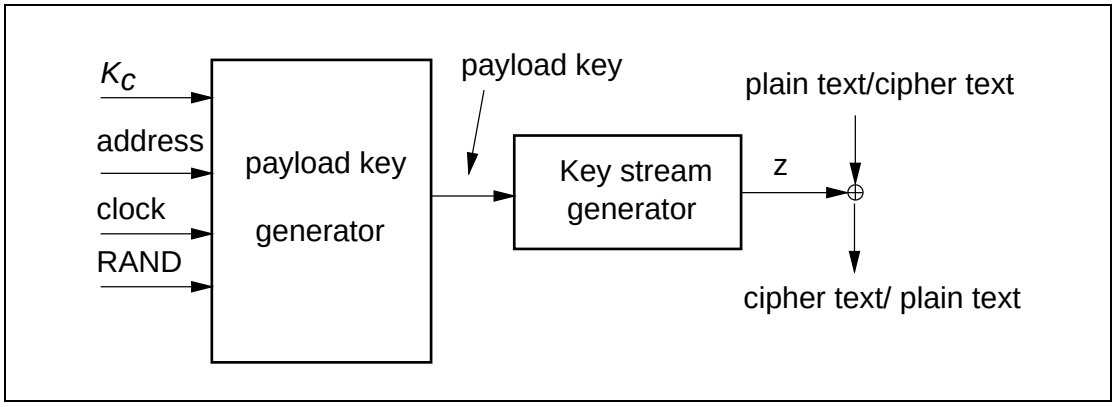

Figure 4.1: Stream ciphering for Bluetooth with E_0.

4.1 ENCRYPTION KEY SIZE NEGOTIATION

Each device implementing the baseband specification shall have a parameter defining the maximal allowed key length, L_{max}, $1 \leq L_{max} \leq 16$ (number of octets in the key). For each application using encryption, a number L_{min} shall be defined indicating the smallest acceptable key size for that particular application. Before generating the encryption key, the devices involved shall negotiate to decide the key size to use.

The master shall send a suggested value, $L_{sug}^{(M)}$, to the slave. Initially, the suggested value shall be set to $L_{max}^{(M)}$. If $L_{min}^{(S)} \leq L_{sug}^{(M)}$, and, the slave supports the suggested length, the slave shall acknowledge and this value shall be the length of the encryption key for this link. However, if both conditions are not fulfilled, the slave shall send a new proposal, $L_{sug}^{(S)} < L_{sug}^{(M)}$, to the master. This value shall be the largest among all supported lengths less than the previous master suggestion. Then, the master shall perform the corresponding test on the slave suggestion. This procedure shall be repeated until a key length agreement is reached, or, one device aborts the negotiation. An abort may be caused by lack of support for L_{sug} and all smaller key lengths, or if $L_{sug} < L_{min}$ in one of the devices. In case of an abort link encryption can not be employed.

The possibility of a failure in setting up a secure link is an unavoidable consequence of letting the application decide whether to accept or reject a suggested key size. However, this is a necessary precaution. Otherwise a fraudulent device could enforce a weak protection on a link by claiming a small maximum key size.

4.2 ENCRYPTION OF BROADCAST MESSAGES

There may be three settings for the baseband regarding encryption:

1. No encryption.
   This is the default setting. No messages are encrypted
2. Point-to-point only encryption.
   Broadcast messages are not encrypted. This may be enabled either during the connection establishment procedure or after the connection has been established.
3. Point-to-point and broadcast encryption.
   All messages are encrypted. This may be enabled after the connection has been established only. This setting should not be enabled unless all affected links share the same master link key as well as the same EN_RAND value, both used in generating the encryption key.

4.3 ENCRYPTION CONCEPT

Broadcast traffic	Individually addressed traffic
No encryption	No encryption
No encryption	Encryption, K_{master}
Encryption, K_{master}	Encryption, K_{master}

Table 4.1: Possible encryption modes for a slave in possession of a master key.

For the encryption routine, a stream cipher algorithm is used in which ciphering bits are bit-wise modulo-2 added to the data stream to be sent over the air interface. The payload is ciphered after the CRC bits are appended, but, prior to the FEC encoding.

Each packet payload shall be ciphered separately. The cipher algorithm E_0 uses the master Bluetooth device address (BD_ADDR), 26 bits of the master real-time clock (CLK $_{26\text{-}1}$) and the encryption key K_C as input, see Figure 4.2 on page 937 (where it is assumed that device A is the master).

The encryption key K_C is derived from the current link key, COF, and a random number, EN_RAND_A (see Section 6.4 on page 953). The random number shall be issued by the master before entering encryption mode. Note that EN_RAND_A is publicly known since it is transmitted as plain text over the air.

Within the E_0 algorithm, the encryption key K_C is modified into another key denoted K'_C. The maximum effective size of this key shall be factory preset and may be set to any multiple of eight between one and sixteen (8-128 bits). The procedure for deriving the key is described in Section 4.5 on page 940.

The real-time clock is incremented for each slot. The E_0 algorithm shall be re-initialized at the start of each new packet (i.e. for Master-to-Slave as well as for Slave-to-Master transmission). By using $CLK_{26\text{-}1}$ at least one bit is changed between two transmissions. Thus, a new keystream is generated after each re-initialization. For packets covering more than a single slot, the Bluetooth clock as found in the first slot shall be used for the entire packet.

The encryption algorithm E_0 generates a binary keystream, K_{cipher}, which shall be modulo-2 added to the data to be encrypted. The cipher is symmetric; decryption shall be performed in exactly the same way using the same key as used for encryption.

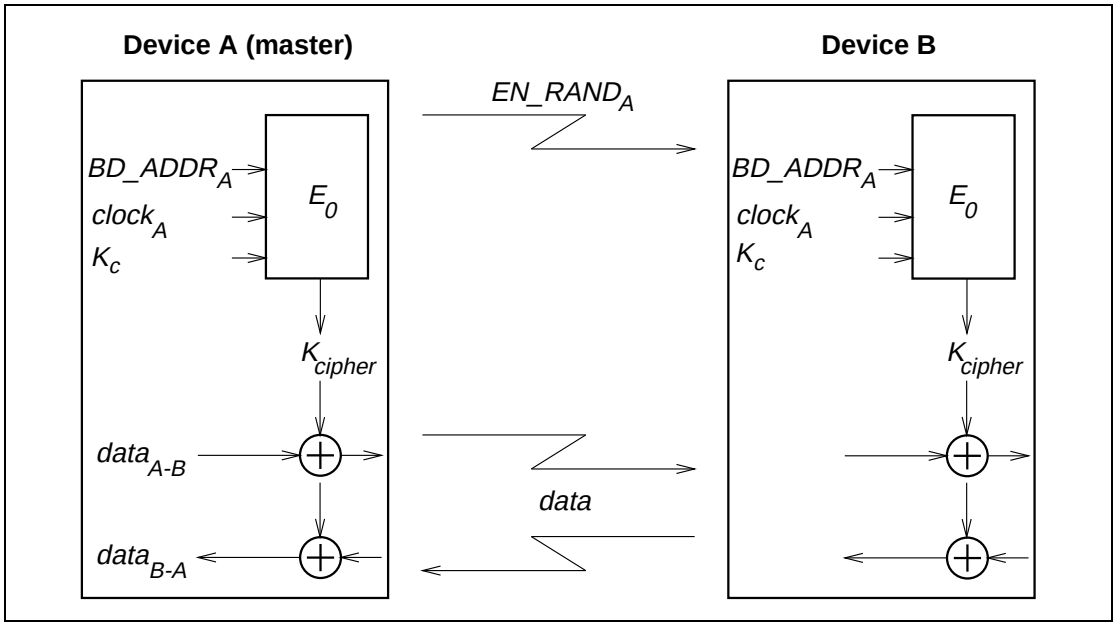

Figure 4.2: Functional description of the encryption procedure

4.4 ENCRYPTION ALGORITHM

The system uses linear feedback shift registers (LFSRs) whose output is combined by a simple finite state machine (called the summation combiner) with 16 states. The output of this state machine is the key stream sequence, or, during initialization phase, the randomized initial start value. The algorithm uses an encryption key K_C, a 48-bit Bluetooth address, the master clock bits $CLK_{26\text{-}1}$, and a 128-bit RAND value. Figure 4.3 on page 938 shows the setup.

There are four LFSRs ($LFSR_1$,...,$LFSR_4$) of lengths $L_1 = 25$, $L_2 = 31$, $L_3 = 33$, and, $L_4 = 39$, with feedback polynomials as specified in Table 4.2 on page 938. The total length of the registers is 128. These polynomials are all primitive. The Hamming weight of all the feedback polynomials is chosen to be five – a reasonable trade-off between reducing the number of required XOR gates in the hardware implementation and obtaining good statistical properties of the generated sequences.

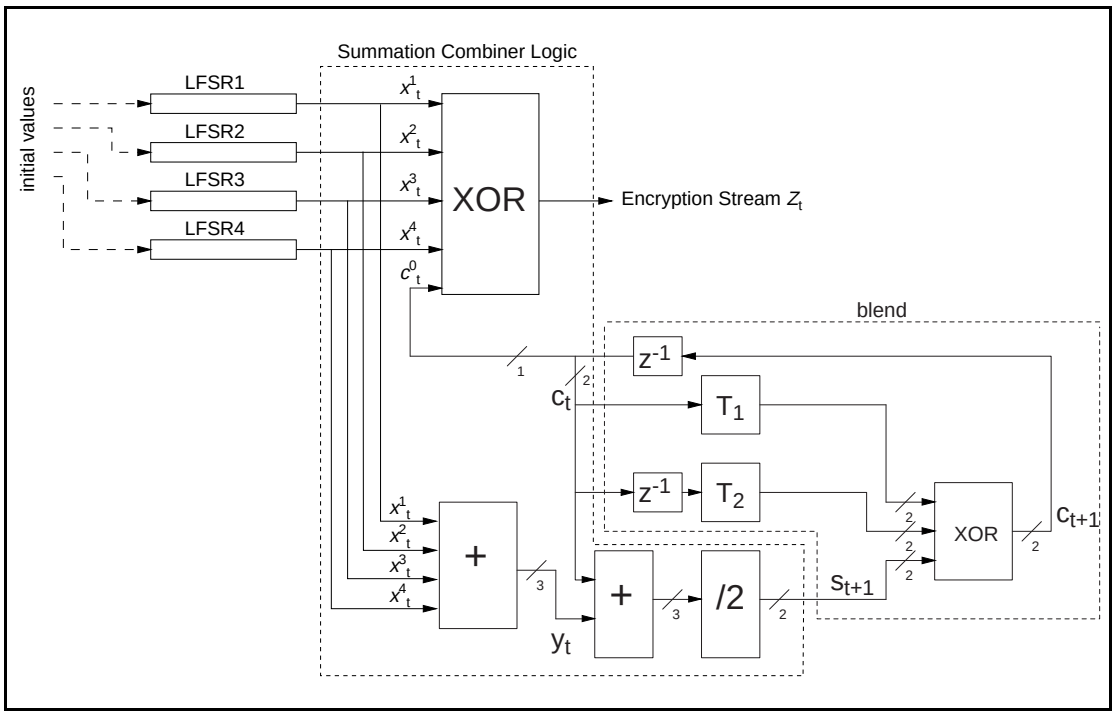

Figure 4.3: Concept of the encryption engine.

i	L_i	**feedback** $f_i(t)$	**weight**
1	25	$t^{25} + t^{20} + t^{12} + t^8 + 1$	5
2	31	$t^{31} + t^{24} + t^{16} + t^{12} + 1$	5
3	33	$t^{33} + t^{28} + t^{24} + t^4 + 1$	5
4	39	$t^{39} + t^{36} + t^{28} + t^4 + 1$	5

Table 4.2: The four primitive feedback polynomials.

Let x_t^i denote the tth symbol of $LFSR_i$. The value y_t is derived from the four-tuple $x_t^1, \ldots, x_t^4$ using the following equation:

$$y_t = \sum_{i=1}^{4} x_t^i, \qquad \text{(EQ 6)}$$

where the sum is over the integers. Thus y_t can take the values 0,1,2,3, or 4. The output of the summation generator is obtained by the following equations:

$$z_t = x_t^1 \oplus x_t^2 \oplus x_t^3 \oplus x_t^4 \oplus c_t^0 \in \{0, 1\}, \qquad \text{(EQ 7)}$$

$$s_{t+1} = (s^1_{t+1}, s^0_{t+1}) = \left\lfloor \frac{y_t + c_t}{2} \right\rfloor \in \{0, 1, 2, 3\}, \quad \text{(EQ 8)}$$

$$c_{t+1} = (c^1_{t+1}, c^0_{t+1}) = s_{t+1} \oplus T_1[c_t] \oplus T_2[c_{t-1}], \quad \text{(EQ 9)}$$

where $T_1[.]$ and $T_2[.]$ are two different linear bijections over GF(4). Suppose GF(4) is generated by the irreducible polynomial $x^2 + x + 1$, and let α be a zero of this polynomial in GF(4). The mappings T_1 and T_2 are now defined as:

$$T_1: \mathrm{GF}(4) \rightarrow \mathrm{GF}(4)$$
$$x \mapsto x$$
$$T_2: \mathrm{GF}(4) \rightarrow \mathrm{GF}(4)$$
$$x \mapsto (\alpha + 1)x.$$

The elements of GF(4) can be written as binary vectors. This is summarized in Table 4.3.

x	$T_1[x]$	$T_2[x]$
00	00	00
01	01	11
10	10	01
11	11	10

Table 4.3: The mappings T_1 and T_2.

Since the mappings are linear, they can be implemented using XOR gates; i.e.

$$T_1: \quad (x_1, x_0) \mapsto (x_1, x_0),$$
$$T_2: \quad (x_1, x_0) \mapsto (x_0, x_1 \oplus x_0).$$

4.4.1 The operation of the cipher

Figure 4.4 on page 939 gives an overview of the operation in time. The encryption algorithm shall run through the initialization phase before the start of transmission or reception of a new packet. Thus, for multislot packets the cipher is initialized using the clock value of the first slot in the multislot sequence.

Figure 4.4: Overview of the operation of the encryption engine. Between each start of a packet (TX or RX), the LFSRs are re-initialized.

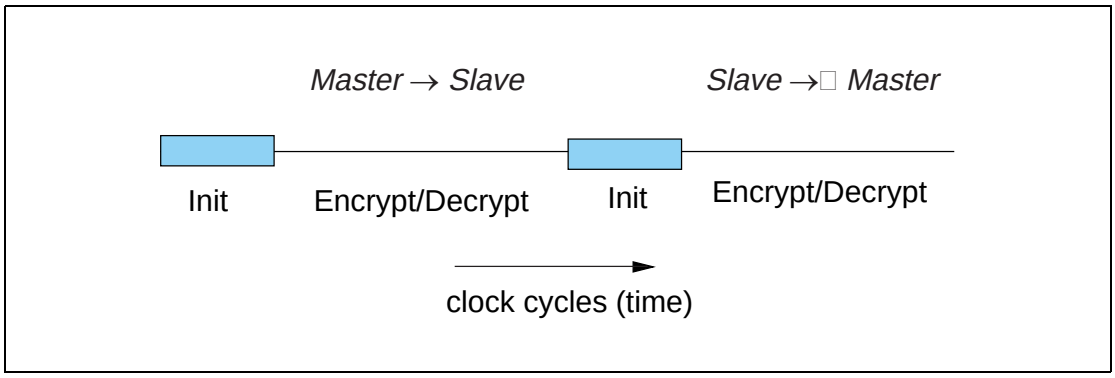

4.5 LFSR INITIALIZATION

The key stream generator is loaded with an initial value for the four LFSRs (in total 128 bits) and the 4 bits that specify the values of c_0 and c_{-1}. The 132 bit initial value is derived from four inputs by using the key stream generator. The input parameters are the key K_C, a 128-bit random number RAND, a 48-bit Bluetooth device address, and the 26 master clock bits $CLK_{26\text{-}1}$.

The effective length of the encryption key may vary between 8 and 128 bits. Note that the actual key length as obtained from E_3 is 128 bits. Then, within E_0, the key length may be reduced by a modulo operation between K_C and a polynomial of desired degree. After reduction, the result is encoded with a block code in order to distribute the starting states more uniformly. The operation shall be as defined in (EQ 10) on page 941.

When the encryption key has been created the LFSRs are loaded with their initial values. Then, 200 stream cipher bits are created by operating the generator. Of these bits, the last 128 are fed back into the key stream generator as an initial value of the four LFSRs. The values of c_t and c_{t-1} are kept. From this point on, when clocked the generator produces the encryption (decryption) sequence which is bitwise XORed to the transmitted (received) payload data.

In the following, octet i of a binary sequence X is $X[i]$. Bit 0 of X is the LSB. Then, the LSB of $X[i]$ corresponds to bit $8i$ of the sequence X, the MSB of $X[i]$ is bit $8i + 7$ of X. For instance, bit 24 of the Bluetooth device address is the LSB of BD_ADDR[3].

The details of the initialization shall be as follows:

1. Create the encryption key to use from the 128-bit secret key K_C and the 128-bit publicly known EN_RAND. Let L, $1 \le L \le 16$, be the

effective key length in number of octets. The resulting encryption key is K'_C:

$$K'_C(x) = g_2^{(L)}(x)(K_C(x) \bmod g_1^{(L)}(x)), \qquad \text{(EQ 10)}$$

where $\deg(g_1^{(L)}(x)) = 8L$ and $\deg(g_2^{(L)}(x)) \leq 128 - 8L$. The polynomials are defined in Table 4.4.

2. Shift the 3 inputs K'_C, the Bluetooth device address, the clock, and the six-bit constant 111001 into the LFSRs. In total, 208 bits are shifted in:

   a) Open all switches shown in Figure 4.5 on page 942;

   b) Arrange inputs bits as shown in Figure 4.5; Set the content of all shift register elements to zero. Set $t = 0$.

   c) Start shifting bits into the LFSRs. The rightmost bit at each level of Figure 4.5 is the first bit to enter the corresponding LFSR.

   d) When the first input bit at level i reaches the rightmost position of $LFSR_i$, close the switch of this LFSR.

   e) At $t = 39$ (when the switch of $LFSR_4$ is closed), reset both blend registers $c_{39} = c_{39-1} = 0$; Up to this point, the content of c_t and c_{t-1} has been of no concern. However, their content will now be used in computing the output sequence.

   f) From now on output symbols are generated. The remaining input bits are continuously shifted into their corresponding shift registers. When the last bit has been shifted in, the shift register is clocked with input = 0;

      Note: When finished, $LFSR_1$ has effectively clocked 30 times with feedback closed, $LFSR_2$ has clocked 24 times, $LFSR_3$ has clocked 22 times, and $LFSR_4$ has effectively clocked 16 times with feedback closed.

3. To mix initial data, continue to clock until 200 symbols have been produced with all switches closed ($t = 239$);

4. Keep blend registers c_t and c_{t-1}, make a parallel load of the last 128 generated bits into the LFSRs according to Figure 4.6 at $t = 240$;

After the parallel load in item 4, the blend register contents shall be updated for each subsequent clock.

L	deg	$g_1^{(L)}$	deg	$g_2^{(L)}$
1	[8]	00000000 00000000 00000000 0000011d	[119]	00e275a0 abd218d4 cf928b9b bf6cb08f
2	[16]	00000000 00000000 00000000 0001003f	[112]	0001e3f6 3d7659b3 7f18c258 cff6efef
3	[24]	00000000 00000000 00000000 010000db	[104]	000001be f66c6c3a b1030a5a 1919808b
4	[32]	00000000 00000000 00000001 000000af	[96]	00000001 6ab89969 de17467f d3736ad9

Table 4.4: Polynomials used when creating K'_c. . [1]

L	deg	$g_1^{(L)}$	deg	$g_2^{(L)}$
5	[40]	00000000 00000000 00000100 00000039	[88]	00000000 01630632 91da50ec 55715247
6	[48]	00000000 00000000 00010000 00000291	[77]	00000000 00002c93 52aa6cc0 54468311
7	[56]	00000000 00000000 01000000 00000095	[71]	00000000 000000b3 f7fffce2 79f3a073
8	[64]	00000000 00000001 00000000 0000001b	[63]	00000000 00000000 a1ab815b c7ec8025
9	[72]	00000000 00000100 00000000 00000609	[49]	00000000 00000000 0002c980 11d8b04d
10	[80]	00000000 00010000 00000000 00000215	[42]	00000000 00000000 0000058e 24f9a4bb
11	[88]	00000000 01000000 00000000 0000013b	[35]	00000000 00000000 0000000c a76024d7
12	[96]	00000001 00000000 00000000 000000dd	[28]	00000000 00000000 00000000 1c9c26b9
13	[104]	00000100 00000000 00000000 0000049d	[21]	00000000 00000000 00000000 0026d9e3
14	[112]	00010000 00000000 00000000 0000014f	[14]	00000000 00000000 00000000 00004377
15	[120]	01000000 00000000 00000000 000000e7	[7]	00000000 00000000 00000000 00000089
16	[128]	1 00000000 00000000 00000000 00000000	[0]	00000000 00000000 00000000 00000001

Table 4.4: Polynomials used when creating K'_c. . [1]

1. All polynomials are in hexadecimal notation. The LSB is in the rightmost position.

In Figure 4.5, all bits are shifted into the LFSRs, starting with the least significant bit (LSB). For instance, from the third octet of the address, BD_ADDR[2], first BD_ADDR_{16} is entered, followed by BD_ADDR_{17}, etc. Furthermore, CL_0 corresponds to CLK_1,..., CL_{25} corresponds to CLK_{26}.

Note that the output symbols x_t^i, $i = 1, \ldots, 4$ are taken from the positions 24, 24, 32, and 32 for $LFSR_1$, $LFSR_2$,$LFSR_3$, and $LFSR_4$, respectively (counting the leftmost position as number 1).

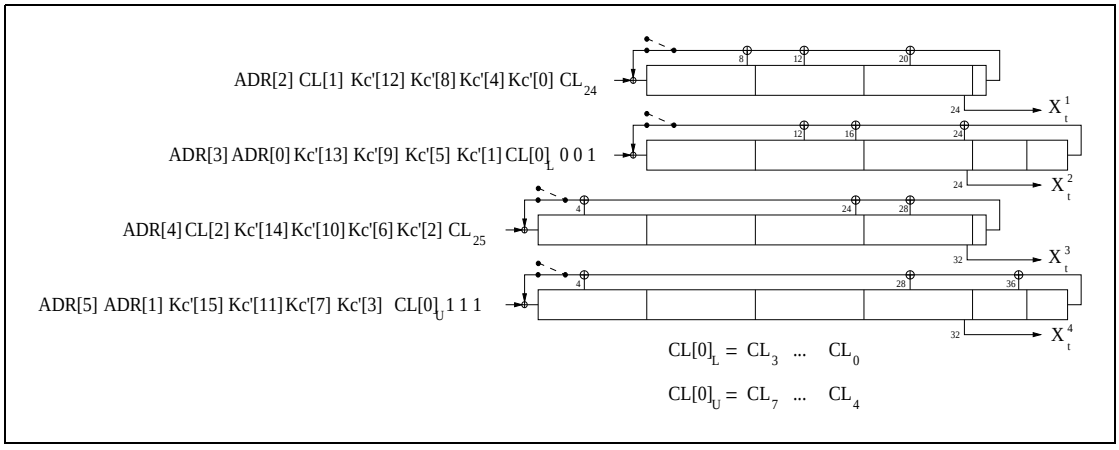

Figure 4.5: Arranging the input to the LFSRs.

In Figure 4.6, the 128 binary output symbols Z_0,..., Z_{127} are arranged in octets denoted Z[0],..., Z[15]. The LSB of Z[0] corresponds to the first of these symbols, the MSB of Z[15] is the last output from the generator. These bits shall be loaded into the LFSRs according to the figure. It is a parallel load and no update of the blend registers is done. The first output symbol is generated at the same time. The octets shall be written into the registers with the LSB in the leftmost position (i.e. the opposite of before). For example, Z_{24} is loaded into position 1 of $LFSR_4$.

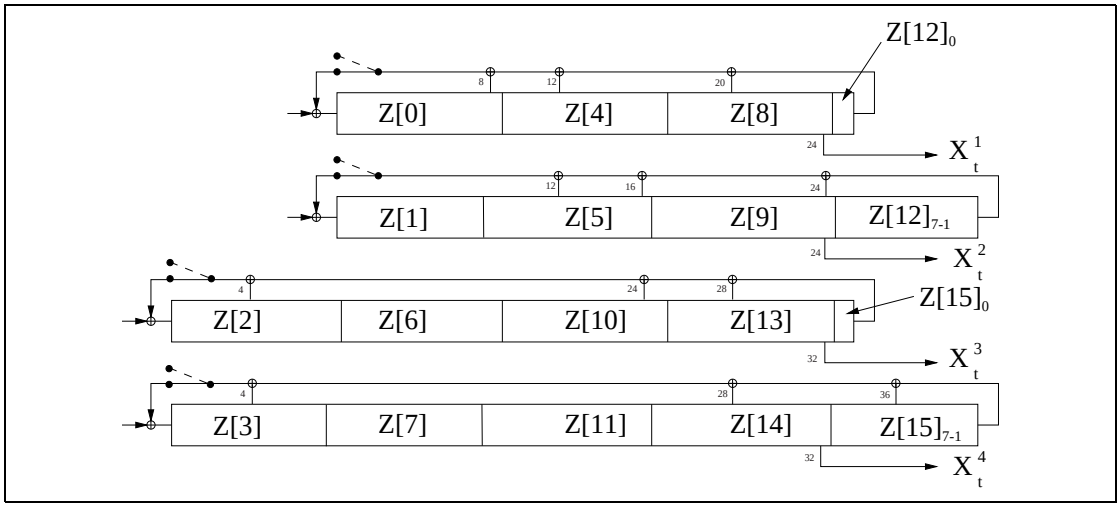

Figure 4.6: Distribution of the 128 last generated output symbols within the LFSRs.

4.6 KEY STREAM SEQUENCE

When the initialization is finished, the output from the summation combiner is used for encryption/decryption. The first bit to use shall be the one produced at the parallel load, i.e. at $t = 240$. The circuit shall be run for the entire length of the current payload. Then, before the reverse direction is started, the entire initialization process shall be repeated with updated values on the input parameters.

Sample data of the encryption output sequence can be found in [Part G] Section 1 on page 815. A necessary, but not sufficient, condition for all Bluetooth compliant implementations of encryption is to produce these encryption streams for identical initialization values.

5 AUTHENTICATION

Authentication uses a challenge-response scheme in which a claimant's knowledge of a secret key is checked through a 2-move protocol using symmetric secret keys. The latter implies that a correct claimant/verifier pair share the same secret key, for example K. In the challenge-response scheme the verifier challenges the claimant to authenticate a random input (the challenge), denoted by AU_RAND_A, with an authentication code, denoted by E_1, and return the result SRES to the verifier, see Figure 5.1 on page 944. This figure also shows that the input to E_1 consists of the tuple AU_RAND_A and the Bluetooth device address (BD_ADDR) of the claimant. The use of this address prevents a simple reflection attack[1]. The secret K shared by devices A and B is the current link key.

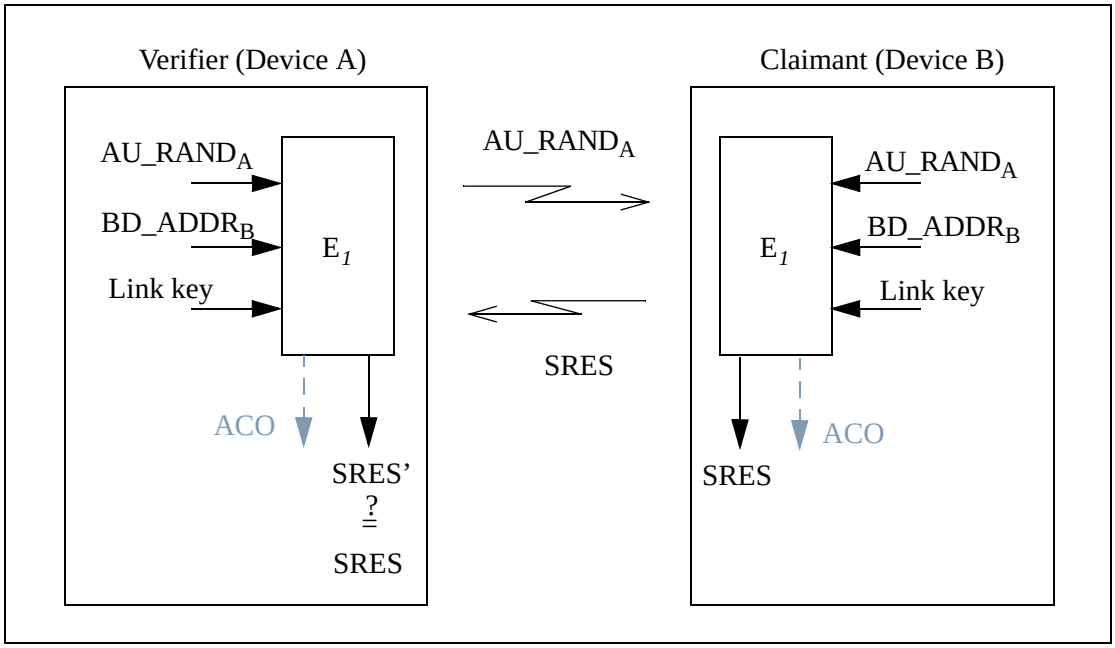

Figure 5.1: Challenge-response for the Bluetooth.

The challenge-response scheme for symmetric keys is depicted in Figure 5.2 on page 945.

1. The reflection attack actually forms no threat because all service requests are dealt with on a FIFO bases. When preemption is introduced, this attack is potentially dangerous.

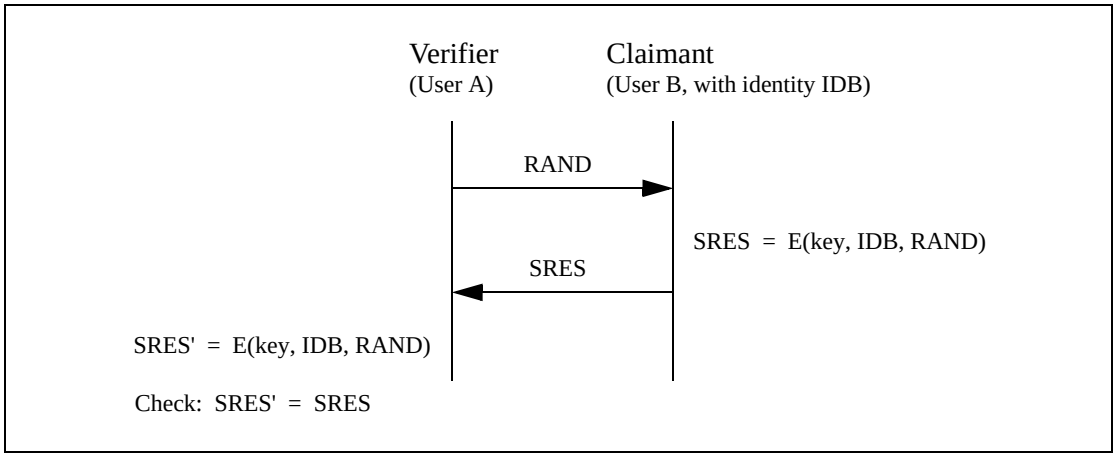

Figure 5.2: Challenge-response for symmetric key systems.

The verifier is not required to be the master. The application indicates which device has to be authenticated. Some applications only require a one-way authentication. However, some peer-to-peer communications, should use a mutual authentication in which each device is subsequently the challenger (verifier) in two authentication procedures. The LM shall process authentication preferences from the application to determine in which direction(s) the authentication(s) takes place. For mutual authentication with the devices of Figure 5.1 on page 944, after device A has successfully authenticated device B, device B could authenticate device A by sending an AU_RAND_B (different from the AU_RAND_A that device A issued) to device A, and deriving the SRES and SRES' from the new AU_RAND_B, the address of device A, and the link key K_{AB}.

If an authentication is successful the value of ACO as produced by E_1 shall be retained.

5.1 REPEATED ATTEMPTS

When the authentication attempt fails, a waiting interval shall pass before the verifier will initiate a new authentication attempt to the same claimant, or before it will respond to an authentication attempt initiated by a device claiming the same identity as the failed device. For each subsequent authentication failure, the waiting interval shall be increased exponentially. That is, after each failure, the waiting interval before a new attempt can be made, could be for example, twice as long as the waiting interval prior to the previous attempt[1]. The waiting interval shall be limited to a maximum.

The maximum waiting interval depends on the implementation. The waiting time shall exponentially decrease to a minimum when no new failed attempts are made during a certain time period. This procedure prevents an intruder from repeating the authentication procedure with a large number of different keys.

To protect a device's private key, a device should implement a method to prevent an attacker from retrieving useful information about the device's private key using invalid public keys. For this purpose, a device can use one of the following methods:

- Change its private key after three failed attempts from any BD_ADDR and after 10 successful pairings from any BD_ADDR; or after a combination of these such that 3 successful pairings count as one failed pairing; or
- Verify that the received public keys from any BD_ADDR are on the correct curve; or
- Implement elliptic curve point addition and doubling using formulas that are valid only on the correct curve.

1. Another appropriate value larger than 1 may be used.

6 THE AUTHENTICATION AND KEY-GENERATING FUNCTIONS

This section describes the algorithms used for authentication and key generation.

6.1 THE AUTHENTICATION FUNCTION E_1

The authentication function E_1 is a computationally secure authentication codeE_1. uses the encryption function SAFER+. The algorithm is an enhanced version of an existing 64-bit block cipher SAFER-SK128, and it is freely available. In the following discussion, the block cipher will be denoted as the function A_r which maps using a 128-bit key, a 128-bit input to a 128-bit output, i.e.

$$A_r: \{0,1\}^{128} \times \{0,1\}^{128} \rightarrow \{0,1\}^{128}$$
$$(k \times x) \mapsto t. \qquad \text{(EQ 11)}$$

The details of A_r are given in the next section. The function E_1 is constructed using A_r as follows

$$E_1: \{0,1\}^{128} \times \{0,1\}^{128} \times \{0,1\}^{48} \rightarrow \{0,1\}^{32} \times \{0,1\}^{96}$$
$$(K, RAND, address) \mapsto (SRES, ACO), \qquad \text{(EQ 12)}$$

where $SRES = Hash(K, RAND, address, 6)[0, \ldots, 3]$, where $Hash$ is a keyed hash function defined as[1],

$$Hash: \{0,1\}^{128} \times \{0,1\}^{128} \times \{0,1\}^{8 \times L} \times \{6,12\} \rightarrow \{0,1\}^{128}$$
$$(K, I_1, I_2, L) \mapsto A'_r([\tilde{K}], [E(I_2, L) +_{16} (A_r(K, I_1) \hat{\Uparrow}_{16} I_1)]), \qquad \text{(EQ 13)}$$

and where

$$E: \{0,1\}^{8 \times L} \times \{6,12\} \rightarrow \{0,1\}^{8 \times 16}$$
$$(X[0, \ldots, L-1], L) \mapsto (X[i(\text{mod } L)] \text{ for } i = 0...15), \qquad \text{(EQ 14)}$$

is an expansion of the L octet word X into a 128-bit word. The function A_r is evaluated twice for each evaluation of E_1. The key $\tilde{K}$ for the second use of A_r (actually A'_r) is offset from K as follows[2]

1. The operator $+_{16}$ denotes bytewise addition mod 256 of the 16 octets, and the operator $\oplus_{16}$ denotes bytewise XORing of the 16 octets.
2. The constants are the largest primes below 257 for which 10 is a primitive root.

$$\begin{aligned}
\tilde{K}[0] &= (K[0] + 233) \mod 256, & \tilde{K}[1] &= K[1] \oplus 229, \\
\tilde{K}[2] &= (K[2] + 223) \mod 256, & \tilde{K}[3] &= K[3] \oplus 193, \\
\tilde{K}[4] &= (K[4] + 179) \mod 256, & \tilde{K}[5] &= K[5] \oplus 167, \\
\tilde{K}[6] &= (K[6] + 149) \mod 256, & \tilde{K}[7] &= K[7] \oplus 131, \\
\tilde{K}\{8\} &= K[8] \oplus 233, & \tilde{K}[9] &= (K[9] + 229) \mod 256, \\
\tilde{K}[10] &= K[10] \oplus 223, & \tilde{K}[11] &= (K[11] + 193) \mod 256, \\
\tilde{K}[12] &= K[12] \oplus 179, & \tilde{K}[13] &= (K[13] + 167) \mod 256, \\
\tilde{K}[14] &= K[14] \oplus 149, & \tilde{K}[15] &= (K[15] + 131) \mod 256.
\end{aligned} \qquad \text{(EQ 15)}$$

A data flowchart of the computation of E_1 is shown in Figure 6.1 on page 948 E_1. is also used to deliver the parameter ACO (Authenticated Ciphering Offset) that is used in the generation of the ciphering key by E_3, see equations (EQ 3) on page 930 and (EQ 23) on page 953. The value of ACO is formed by the octets 4 through 15 of the output of the hash function defined in (EQ 13) on page 947:

$$ACO = \text{Hash}(K, RAND, \text{address}, 6)[4, \ldots, 15]. \qquad \text{(EQ 16)}$$

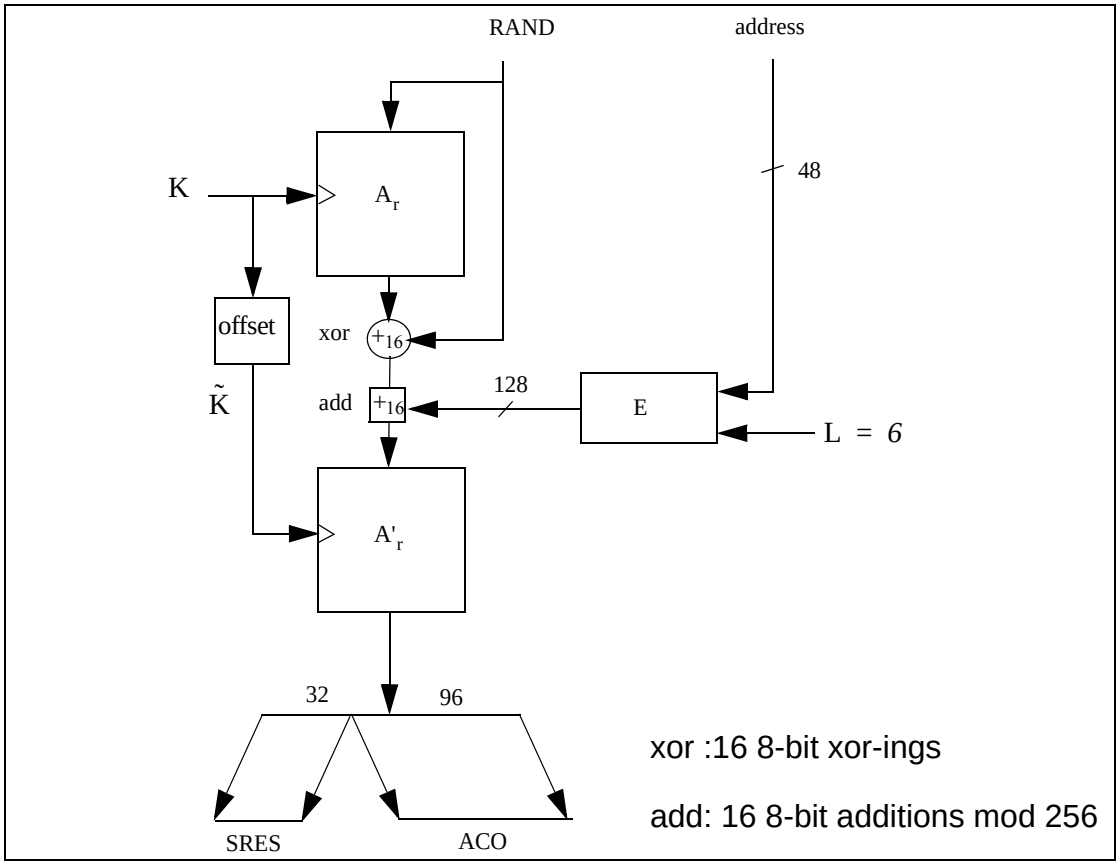

Figure 6.1: Flow of data for the computation of E_1.

6.2 THE FUNCTIONS A_r AND A'_r

The function A_r is identical to SAFER+. It consists of a set of 8 layers, (each layer is called a round) and a parallel mechanism for generating the sub keys $K_p[j]$, $p = 1, 2, \ldots, 17$, which are the round keys to be used in each round. The function will produce a 128-bit result from a 128-bit random input string and a 128-bit key. Besides the function A_r, a slightly modified version referred to as A'_r is used in which the input of round 1 is added to the input of round 3. This is done to make the modified version non-invertible and prevents the use of A'_r (especially in E_{2x}) as an encryption function. See Figure 6.2 on page 950 for details.

6.2.1 The round computations

The computations in each round are a composition of encryption with a round key, substitution, encryption with the next round key, and, finally, a Pseudo Hadamard Transform (PHT). The computations in a round shall be as shown in Figure 6.2 on page 950. The sub keys for round $r, r = 1, 2, \ldots, 8$ are denoted $K_{2r-1}[j]$, $K_{2r}[j]$, $j = 0, 1, \ldots, 15$. After the last round $K_{17}[j]$ is applied identically to all previous odd numbered keys.

6.2.2 The substitution boxes “e” and “l”

In Figure 6.2 on page 950 two boxes are shown, marked “e” and “l”. These boxes implement the same substitutions as are used in SAFER+; i.e. they implement

$$
\begin{aligned}
e, l &: \{0, \ldots, 255\} \rightarrow \{0, \ldots, 255\}, \\
e &: i \mapsto (45^i \pmod{257}) \pmod{256}, \\
l &: i \mapsto j \text{ s.t. } i = e(j).
\end{aligned}
$$

Their role, as in the SAFER+ algorithm, is to introduce non-linearity.

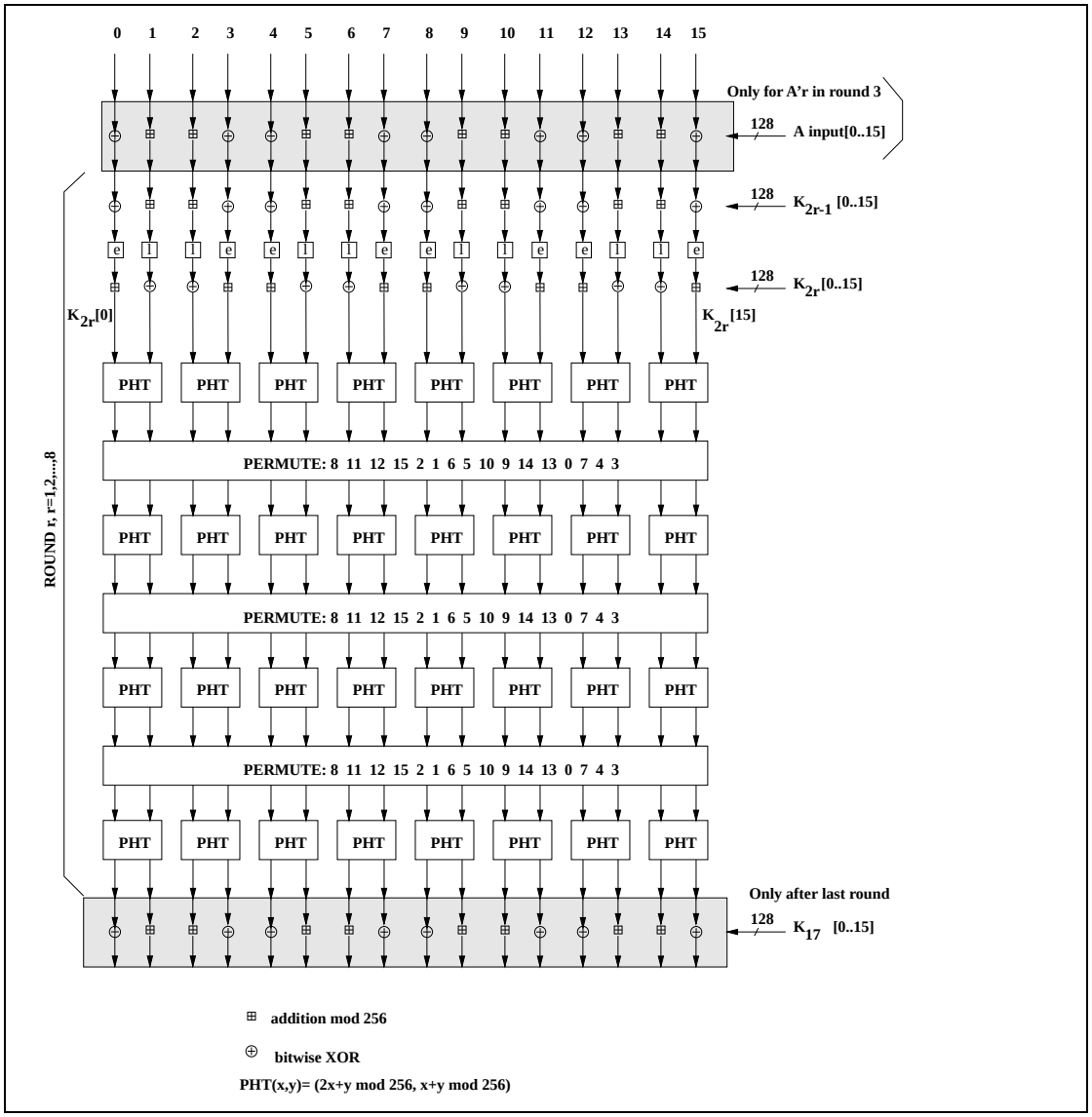

Figure 6.2: One round in A_r *and* A'_r.

In Section 6.2, the permutation boxes show how input byte indices are mapped onto output byte indices. Thus, position 8 is mapped on position 0 (leftmost), position 11 is mapped on position 1, etc.

6.2.3 Key scheduling

In each round, 2 batches of 16 octet-wide keys are needed. These round keys are derived as specified by the key scheduling in SAFER+. Figure 6.3 on page 951 gives an overview of how the round keys $K_p[j]$ are determined. The bias vectors B_2, B_3, ..., B_{17} shall be computed according to following equation:

$$B_p[i] = ((45^{(45^{17p+i+1} \bmod 257)} \bmod 257) \bmod 256), \text{ for } i = 0, \ldots, 15. \qquad \text{(EQ 17)}$$

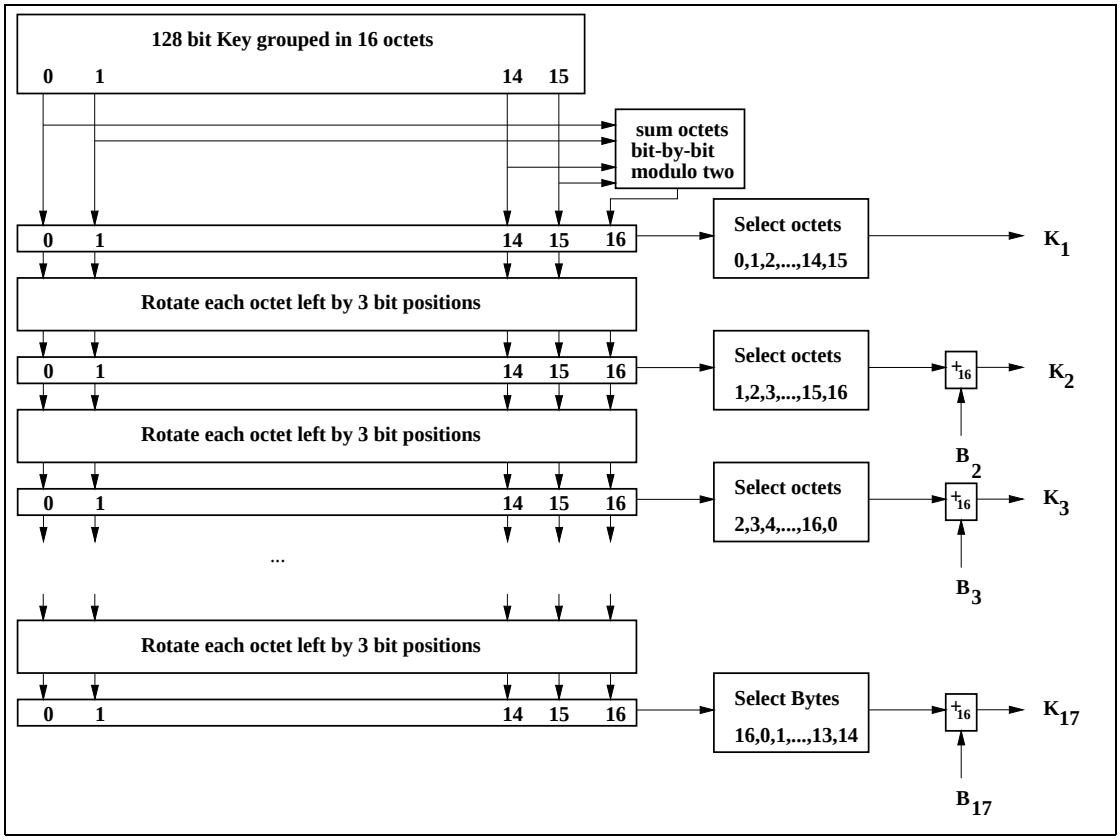

Figure 6.3: Key scheduling in A_r.

6.3 E_2-KEY GENERATION FUNCTION FOR AUTHENTICATION

The key used for authentication shall be derived through the procedure that is shown in Figure 6.4 on page 953. The figure shows two modes of operation for the algorithm. In the first mode, E_{21} produces a 128-bit kink key, K, using a 128-bit RAND value and a 48-bit address. This mode shall be utilized when creating unit keys and combination keys. In the second mode, E_{22} produces a 128-bit link key, K, using a 128-bit RAND value and an L octet user PIN. The second mode shall be used to create the initialization key, and also when a master key is to be generated.

When the initialization key is generated, the PIN is augmented with the BD_ADDR, see Section 3.2.1 on page 928 for which address to use. The augmentation shall always start with the least significant octet of the address immediately following the most significant octet of the PIN. Since the maximum length of the PIN used in the algorithm cannot exceed 16 octets, it is possible that not all octets of BD_ADDR will be used.

This key generating algorithm again exploits the cryptographic function E_2. for mode 1 (denoted E_{21}) is computed according to following equations:

$$\begin{aligned} E_{21}:\ \{0,1\}^{128} \times \{0,1\}^{48} &\rightarrow \{0,1\}^{128} \\ (\text{RAND, address}) &\mapsto A'_r(X, Y) \end{aligned} \qquad \text{(EQ 18)}$$

where (for mode 1)

$$\begin{cases} X = \text{RAND}[0 \ldots 14] \cup (\text{RAND}[15] \oplus 6) \\ Y = \bigcup_{i=0}^{15} \text{address}[i \pmod 6] \end{cases} \qquad \text{(EQ 19)}$$

Let L be the number of octets in the user PIN. The augmenting is defined by

$$\text{PIN}' = \begin{cases} \text{PIN}[0 \ldots L-1] \cup \text{BD_ADDR}[0 \ldots \min\{5, 15-L\}], & L < 16, \\ \text{PIN}[0 \ldots L-1], & L = 16, \end{cases} \qquad \text{(EQ 20)}$$

Then, in mode 2, E_2 (denoted E_{22}) is

$$\begin{aligned} E_{22}:\ \{0,1\}^{8L'} \times \{0,1\}^{128} \times \{1, 2, \ldots, 16\} &\rightarrow \{0,1\}^{128} \\ (\text{PIN', RAND, } L') &\mapsto A'_r(X, Y) \end{aligned} \qquad \text{(EQ 21)}$$

where

$$\begin{cases} X = \bigcup_{i=0}^{15} \text{PIN}'[i \pmod{L'}], \\ Y = \text{RAND}[0 \ldots 14] \cup (\text{RAND}[15] \oplus L'), \end{cases} \qquad \text{(EQ 22)}$$

and $L' = \min\{16, L + 6\}$ is the number of octets in PIN'.

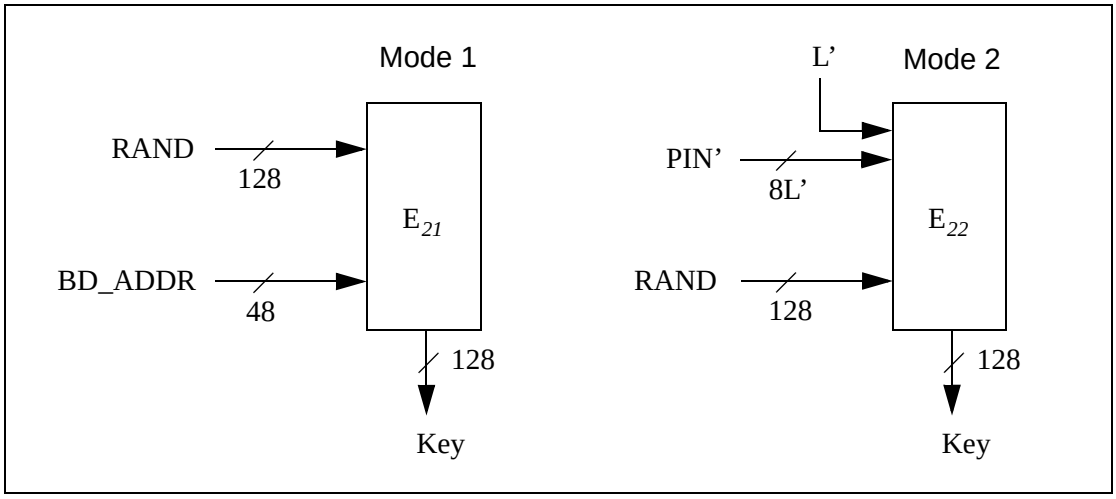

Figure 6.4: Key generating algorithm E_2 and its two modes. Mode 1 is used for unit and combination keys, while mode 2 is used for K_{init} and K_{master}.

6.4 E_3-KEY GENERATION FUNCTION FOR ENCRYPTION

The ciphering key K_C used by E_0 shall be generated by E_3. The function E_3 is constructed using A'_r as follows

$$E_3: \{0,1\}^{128} \times \{0,1\}^{128} \times \{0,1\}^{96} \rightarrow \{0,1\}^{128}$$
$$(K, RAND, COF) \mapsto Hash(K, RAND, COF, 12) \quad \text{(EQ 23)}$$

where $Hash$ is the hash function as defined by (EQ 13) on page 947. The key length produced is 128 bits. However, before use within E_0, the encryption key K_C is shortened to the correct encryption key length, as described in Section 4.5 on page 940. A block scheme of E_3 is depicted in Figure 6.5.

The value of COF is determined as specified by equation (EQ 3) on page 930.

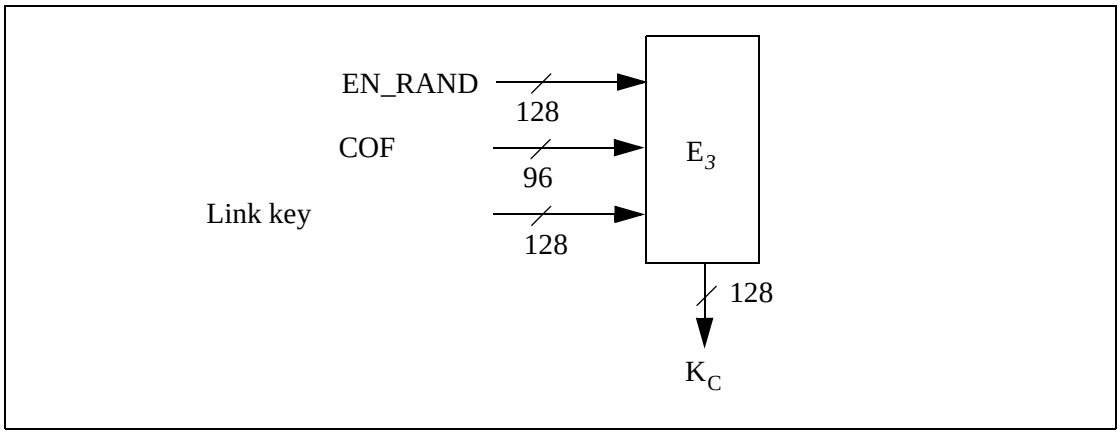

Figure 6.5: Generation of the encryption key

7 SECURE SIMPLE PAIRING

The Secure Simple Pairing security functions and procedures are described in this section. In addition, a cryptographic analysis of each procedure is provided.

There are five phases of Secure Simple Pairing:

- Phase 1: Public key exchange
- Phase 2: Authentication Stage 1
- Phase 3: Authentication Stage 2
- Phase 4: Link key calculation
- Phase 5: LMP Authentication and Encryption

Phases 1, 3, 4 and 5 are the same for all protocols whereas phase 2 (Authentication Stage 1) is different depending on the protocol used. Distributed through these five phases are 13 steps.

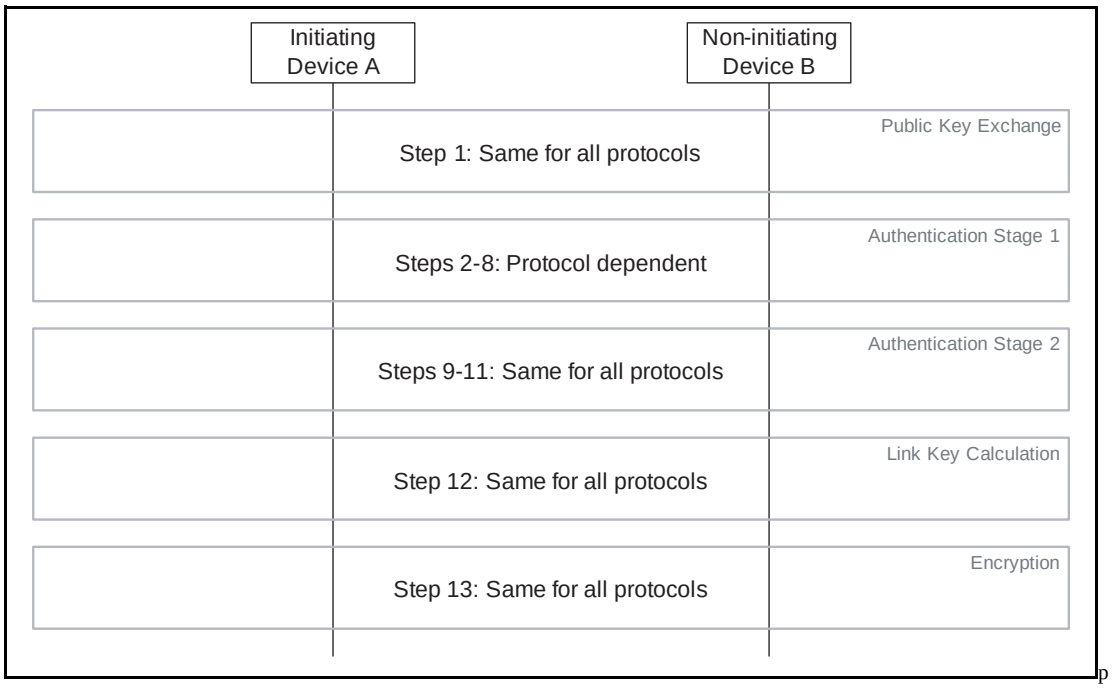

Figure 7.1: Simple Pairing Security Phases

The terminology used in the security sections is defined in Table 7.1:

Term	Definition
Cx	Commitment value from device X
Cxi	i^{th} commitment value from device X. Only used in the passkey entry protocol

Table 7.1: Terminology

Term	Definition
DHKey	Diffie Hellman key
Ex	Check value from device X
f1( )	Used to generate the 128-bit commitment values Ca and Cb
f2( )	Used to compute the link key and possible other keys from the DHKey and random nonces
f3( )	Used to compute check values Ea and Eb in Authentication Stage 2
g( )	Used to compute numeric check values
h2( )	Used to compute Generic AMP and Dedicated AMP keys
IOcapA	IO capabilities of device A
IOcapB	IO capabilities of device B
LK	Link Key
Nx	Nonce (unique random value) from device X
Nxi	i^{th} nonce (unique random value) from device X. Only used in the passkey entry protocol
PKx	Public Key of device X
rx	Random value generated by device X
rxi	Bit i of the random value rx. Only used in the passkey entry protocol
SKx	Secret (Private) Key of device X
Vx	Confirmation value on device X. Only used in the numeric compare protocol.
X	BD_ADDR of device X

Table 7.1: Terminology

7.1 PHASE 1: PUBLIC KEY EXCHANGE

Initially, each device generates its own Elliptic Curve Diffie-Hellman (ECDH) public-private key pair (step 1). This key pair needs to be generated only once per device and may be computed in advance of pairing. A device may, at any time, choose to discard its public-private key pair and generate a new one, although there is not a requirement to do so.

Pairing is initiated by the initiating device sending its public key to the receiving device (step 1a). The responding device replies with its own public key (step 1b) These public keys are not regarded as secret although they may identify the devices. Note that steps 1a and 1b are the same in all three protocols.

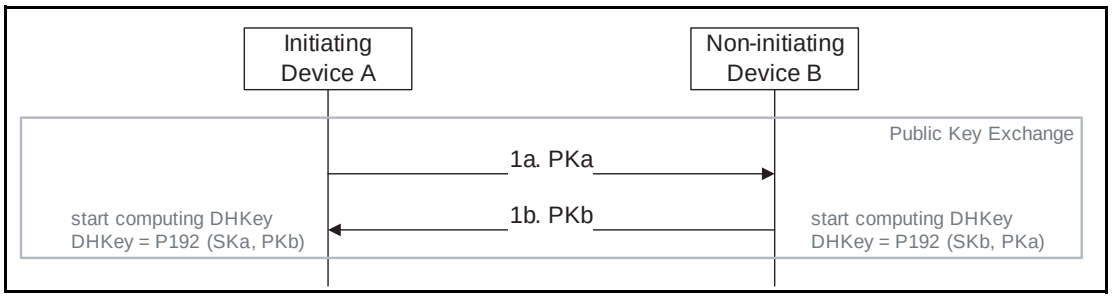

Figure 7.2: Public Key Exchange Details

7.2 PHASE 2: AUTHENTICATION STAGE 1

Authentication Stage 1 has three different protocols: Numeric Comparison, Out-of-Band, and Passkey Entry. Note that there is not a separate protocol for the Just Works association model. This association model shares the Numeric Comparison protocol.

The protocol is chosen based on the IO capabilities of the two devices.

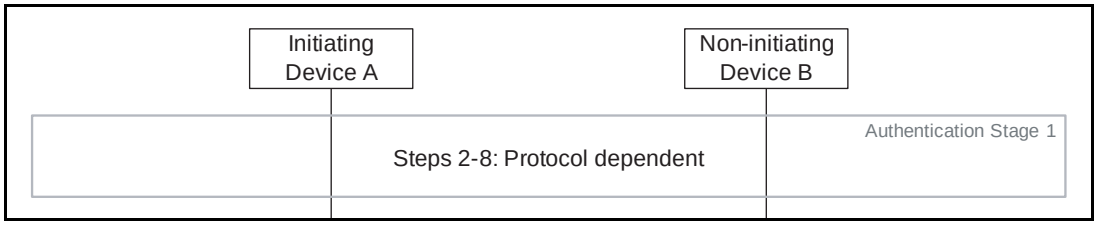

Figure 7.3: Authentication Stage 1 (High Level)

The three protocols are described in the following sections.

7.2.1 Authentication Stage 1: Numeric Comparison Protocol

The Numeric Comparison protocol provides limited protection against active "man-in-the-middle" (MITM) attacks as an active man-in-the-middle will succeed with a probability of 0.000001 on each iteration of the protocol. Provided that there is no MITM at the time the pairing is performed, the shared Link Key that is generated is computationally secure from even a passive eavesdropper that may have been present during the pairing.

The sequence diagram of Authentication Stage 1 for the Numeric Comparison protocol from the cryptographic point of view is shown below:

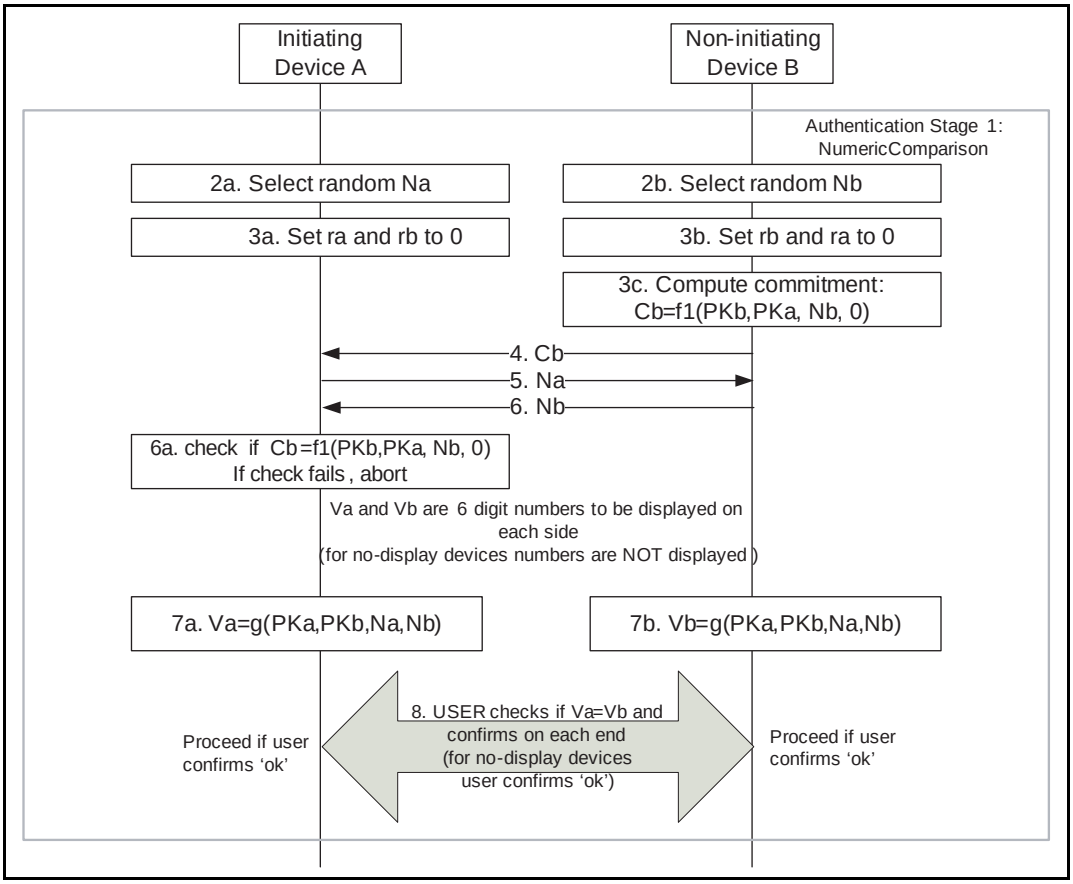

Figure 7.4: Authentication Stage 1: Numeric Comparison Protocol Details

After the public keys have been exchanged, each device selects a pseudo-random 128-bit nonce (step 2). This value is used to prevent replay attacks and must be freshly generated with each instantiation of the pairing protocol. This value should be generated directly from a physical source of randomness or with a good pseudo-random generator seeded with a random value from a physical source.

Following this the responding device then computes a commitment to the two public keys that have been exchanged and its own nonce value (step 3c). This commitment is computed as a one-way function of these values and is transmitted to the initiating device (step 4). The commitment prevents an attacker from changing these values at a later time.

The initiating and responding devices then exchange their respective nonce values (steps 5 and 6) and the initiating device confirms the commitment (step 6a). A failure at this point indicates the presence of an attacker or other transmission error and causes the protocol to abort. The protocol may be repeated with or without the generation of new public-private key pairs, but new nonces must be generated if the protocol is repeated.

Assuming that the commitment check succeeds, the two devices each compute 6-digit confirmation values that are displayed to the user on their respective devices (steps 7a, 7b, and 8). The user is expected to check that these 6-

digit values match and to confirm if there is a match. If there is no match, the protocol aborts and, as before, new nonces must be generated if the protocol is to be repeated.

An active MITM must inject its own key material into this process to have any effect other than denial-of-service. A simple MITM attack will result in the two 6-digit display values being different with probability 0.999999. A more sophisticated attack may attempt to engineer the display values to match, but this is thwarted by the commitment sequence. If the attacker first exchanges nonces with the responding device, it must commit to the nonce that it will use with the initiating device before it sees the nonce from the initiating device. If the attacker first exchanges nonces with the initiating device, it must send a nonce to the responding device before seeing the nonce from the responding device. In each case, the attacker must commit to at least the second of its nonces before knowing the second nonce from the legitimate devices. It therefore cannot choose its own nonces in such a way as to cause the display values to match.

7.2.2 Authentication Stage 1: Out of Band Protocol

The Out-of-Band protocol is used when authentication information has been received by at least one of the devices and indicated in the OOB Authentication Data Present parameter in the LMP IO capability exchange sequence. The mode in which the discovery of the peer device is first done in-band and then followed by the transmission of authentication parameters through OOB interface is not supported. The sequence diagram for Authentication Stage 1 for Out of Band from the cryptographic point of view is shown below:

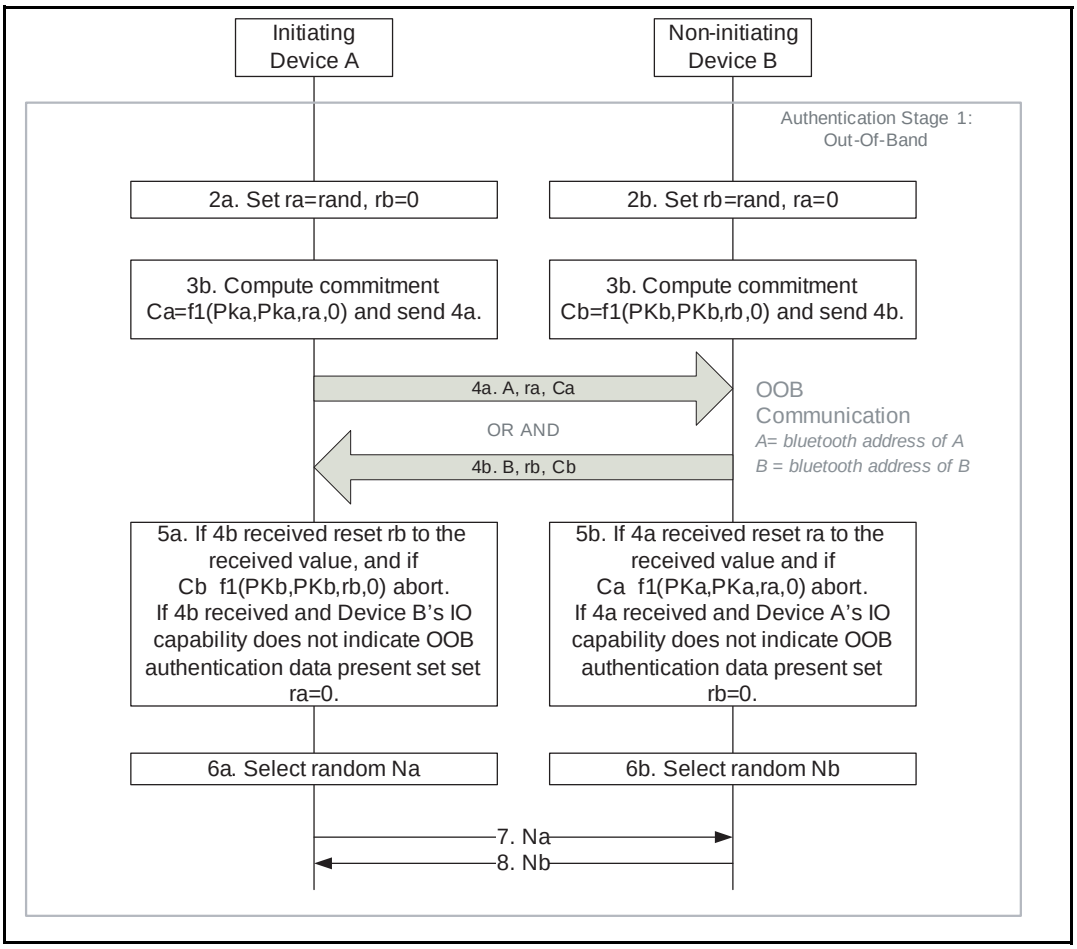

Figure 7.5: Authentication Stage 1: Out of Band Details

Principle of operation: If both devices can transmit and/or receive data over an out-of-band channel, then mutual authentication will be based on the commitments of the public keys (Ca and Cb) exchanged OOB in Authentication stage 1. If OOB communication is possible only in one direction (e.g., one device can only be read as e.g. is the case of a device equipped with a passive NFC tag), then authentication of the device receiving the OOB communication will be based on that device knowing a random number r sent via OOB. In this case, r must be secret: r can be created afresh every time, or access to the device sending r must be restricted. If r is not sent by a device, it is assumed to be 0 by the device receiving the OOB information in step 4a or 4b.

If the OOB communication cannot be tampered with (i.e. immune to a MITM attack), this association method is also not susceptible to MiTM attack. Also, in the Out of Band protocol the size of authentication parameters (Ca, Cb and ra, rb) need not be restricted by what the user can comfortably read or type. For that reason the Out of Band protocol can be more secure than using the Numeric Comparison or Passkey Entry protocols. However, both devices need to have matching OOB interfaces.

Roles of A and B: The OOB Authentication Stage 1 protocol is symmetric with respect to the roles of A and B. It does not require that device A always will ini-

tiate pairing and it automatically resolves asymmetry in the OOB communication, e.g. in the case when one of the devices has an NFC tag and can only transmit OOB.

Order of steps: The public key exchange must happen before the verification step 5. In the diagram the in-band public key exchange between the devices (step 1) is done before the OOB communication (step 4). But when the pairing is initiated by an OOB interface, public key exchange will happen after the OOB communication (step 1 will be between steps 4 and 5).

Values of ra and rb: Since the direction of the peer's OOB interface cannot be verified before the OOB communication takes place, a device should always generate and if possible transmit through its OOB interface a random number r to the peer. Each device applies the following rules locally to set the values of its own r and the value of the peer's r:

1. Initially, r of the device is set to a random number and r of the peer is set to 0 (step 2).
2. If a device has received OOB, it sets the peer's r value to what was sent by the peer (Step 5).
3. If the remote device's OOB Authentication Data parameter sent in the LMP IO capabilities exchange sequence is set to No OOB Data Received, it sets its own r value to 0 (Step 5)

These rules ensure that when entering Authentication Stage 2, both A and B have the same values for ra and rb if OOB communication took place.

7.2.3 Authentication Stage 1: Passkey Entry Protocol

The Passkey Entry protocol is used when LMP IO capability exchange sequence indicates that Passkey Entry shall be used.

The sequence diagram for Authentication Stage 1 for Passkey Entry from the cryptographic point of view is shown in Figure 7.6.

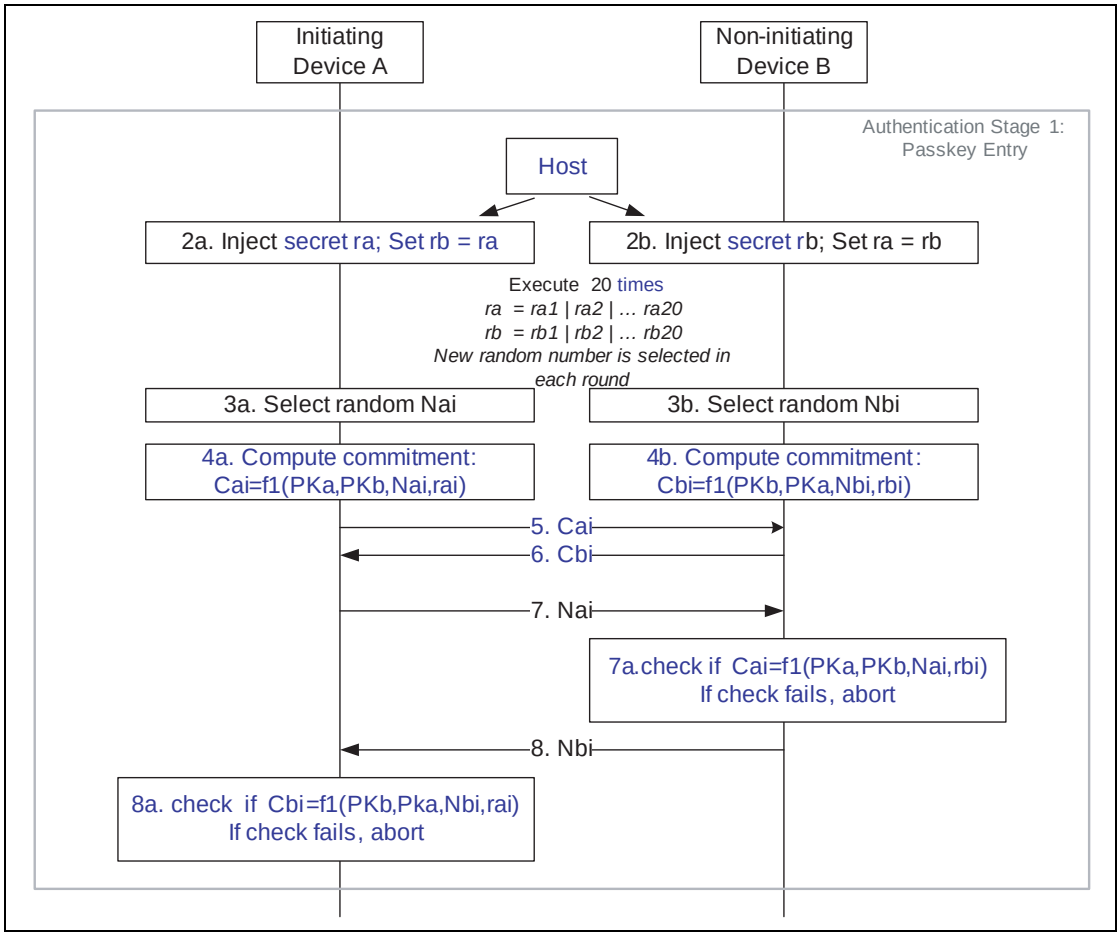

Figure 7.6: Authentication Stage 1: Passkey Entry Details

The user inputs an identical Passkey into both devices. Alternately, the Passkey may be generated and displayed on one device, and the user then inputs it into the other (step 2). This short shared key will be the basis of the mutual authentication of the devices. Steps 3 through 8 are repeated k times for a k-bit Passkey --e.g., k=20 for a 6-digit Passkey (999999=0xF423F).

In Steps 3-8, each side commits to each bit of the Passkey, using a long nonce (128 bits), and sending the hash of the nonce, the bit of the Passkey, and both public keys to the other party. The parties then take turns revealing their commitments until the entire Passkey has been mutually disclosed. The first party to reveal a commitment for a given bit of the Passkey effectively reveals that bit of the Passkey in the process, but the other party then has to reveal the corresponding commitment to show the same bit value for that bit of the Passkey, or else the first party will then abort the protocol, after which no more bits of the Passkey are revealed.

This "gradual disclosure" prevents leakage of more than 1 bit of un-guessed Passkey information in the case of a MITM attack. A MITM attacker with only partial knowledge of the Passkey will only receive one incorrectly-guessed bit of the Passkey before the protocol fails. Hence, a MitM attacker who engages

first one side, then the other will only gain an advantage of at most two bits over a simple brute-force guesser which succeeds with probability 0.000001.

The long nonce is included in the commitment hash to make it difficult to brute-force even after the protocol has failed. The public Diffie-Hellman values are included to tie the Passkey protocol to the original ECDH key exchange, to prevent a MitM from substituting the attacker's public key on both sides of the ECDH exchange in standard MitM fashion.

At the end of this stage, Na is set to Na_{20} and Nb is set to Nb_{20} for use in Authentication Stage 2.

7.3 PHASE 3: AUTHENTICATION STAGE 2

The second stage of authentication then confirms that both devices have successfully completed the exchange. This stage is identical in all three protocols.

Each device computes a new confirmation value that includes the previously exchanged values and the newly derived shared key (step 9). The initiating device then transmits its confirmation value which is checked by the responding device (step 10). If this check fails, it indicates that the initiating device has not confirmed the pairing, and the protocol must be aborted. The responding device then transmits its confirmation value which is checked by the initiating device (step 11). A failure indicates that the responding device has not confirmed the pairing and the protocol should abort.

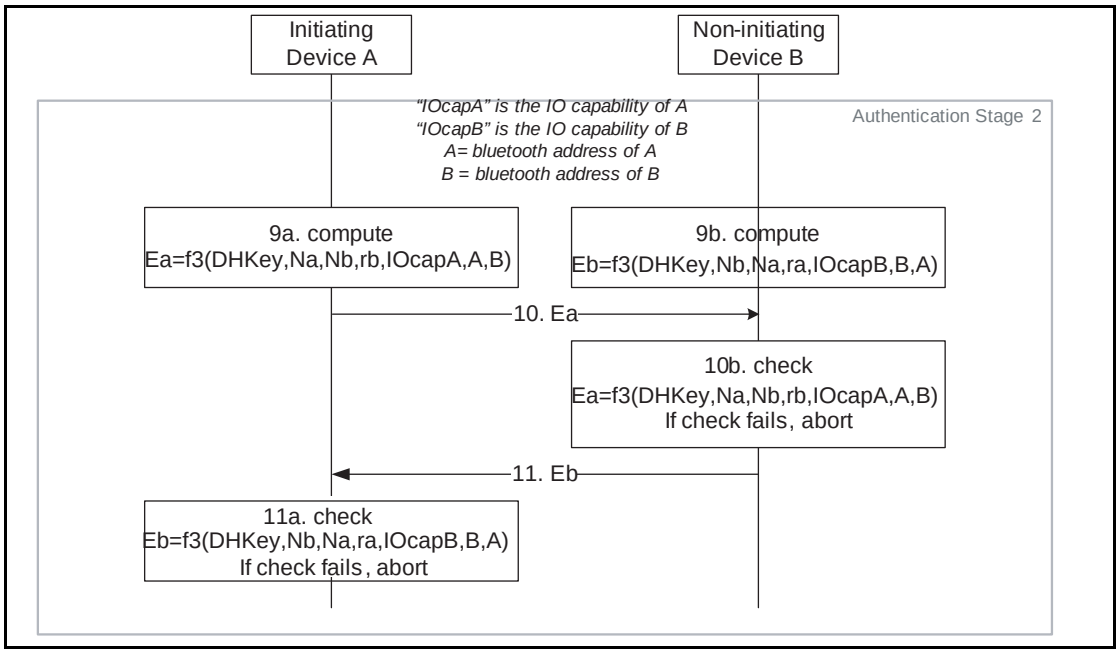

Figure 7.7: Authentication Stage 2

7.4 PHASE 4: LINK KEY CALCULATION

Once both sides have confirmed the pairing, a link key is computed from the derived shared key and the publicly exchanged data (step 12). The nonces ensure the freshness of the key even if long-term ECDH values are used by both sides. This link key is used to maintain the pairing.

When computing the link key both parties shall input the parameters in the same order to ensure that both devices compute the same key: device A's parameters are those of the piconet master and device B's parameters are those of the piconet slave.

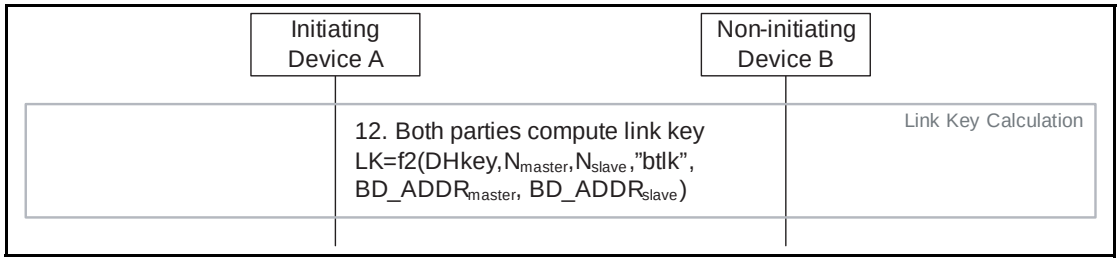

Figure 7.8: Link Key Calculation

7.5 PHASE 5: LMP AUTHENTICATION AND ENCRYPTION

The final phase in Simple Pairing is generating the encryption keys. This is the same as the final steps in legacy pairing.

7.6 ELLIPTIC CURVE DEFINITION

Simple Pairing uses the FIPS P-192 curve defined in [13]. Elliptic curves are specified by p, a, b and ares of the form

$$E: y^2 = x^3 + ax + b \pmod p$$

For each value of b a unique curve can be developed. In NIST P-192:

a = mod (-3, p)

b is defined and its method of generation can be verified by using SHA-1 (with a given seed s and using $b^2c = -27 \pmod p$)

The following parameters are given:

- The prime modulus p, order r, base point x-coordinate Gx, base point y-coordinate Gy.
- The integers p and r are given in decimal form; bit strings and field elements are given in hex.

```
p = 6277101735386680763835789423207666416083908700390324961279
r = 6277101735386680763835789423176059013767194773182842284081
b = 64210519 e59c80e7 0fa7e9ab 72243049 feb8deec c146b9b1
```

```
Gx = 188da80e b03090f6 7cbf20eb 43a18800 f4ff0afd 82ff1012
Gy = 07192b95 ffc8da78 631011ed 6b24cdd5 73f977a1 1e794811
```

The function P192 is defined as follows. Given an integer u, 0 < u < r, and a point V on the curve E, the value P192(u,V) is computed as the x-coordinate of the uth multiple uV of the point V.

The private keys shall be between 1 and r/2, where r is the Order of the Abelian Group on the elliptic curve (e.g. between 1 and $2^{192}/2$).

7.7 CRYPTOGRAPHIC FUNCTION DEFINITIONS

In addition to computing the Elliptic Curve Diffie Hellman key, the Numeric Comparison, Out-of-Band and Passkey Entry protocols require four cryptographic functions. These functions are known as *f1*, *g*, *f2* and *f3*.

f1 is used to generate the 128-bit commitment values Ca and Cb

g is used to compute the 6-digit numeric check values

f2 is used to compute the link key and possible other keys from the DHKey and random nonces

f3 is used to compute check values Ea and Eb in Authentication Stage 2.

The basic building block for these functions is based on as it already exists in the key derivation function E3 (which is the same as E1 but with a larger input).

Inside the f1, g, f2, and f3 cryptographic functions, when a multi-octet integer input parameter is used as input to the SHA-256 and HMAC-SHA-256 functions, the most significant octet of the integer parameter shall be the first octet of the stream and the least significant octet of the integer parameter shall be the last octet of the stream. The output of the f1, g, f2 and f3 cryptographic functions is a multi-octet integer where the first octet out of SHA-256 and HMAC-SHA-256 shall be the MSB and the last octet shall be the LSB of that parameter.

Inside the h2 cryptographic function, when a multi-octet integer input parameter is used as input to the SHA-256 and HMAC-SHA-256 functions, the most significant octet of the integer parameter shall be the last octet of the stream and the least significant octet of the integer parameter shall be the first octet of the stream. The output of the h2 cryptographic function is a multi-octet integer where the first octet out of SHA-256 and HMAC-SHA-256 shall be the LSB and the last octet shall be the MSB of that parameter.

7.7.1 The Simple Pairing Commitment Function f1

The commitments are computed with function f1. The definition of the Simple Pairing commitment function makes use of the MAC function HMAC based on $SHA\text{-}256_X$, which is denoted as $HMAC\text{-}SHA\text{-}256_X$ with 128-bit key X.

The inputs to the Simple Pairing function f1 are:

U is 192 bits

V is 192 bits

X is 128 bits

Z is 8 bits

Z is zero (i.e. 8 bits of zeros) for Numeric Comparison and OOB protocol. In the Passkey protocol the most significant bit of Z is set equal to one and the least significant bit is made up from one bit of the passkey e.g. if passkey is '1' then Z = 0x81 and if the passkey is '0' then Z = 0x80.

The output of the Simple Pairing f1 function is:

$$f1(U, V, X, Z) = \text{HMAC-SHA-256}_X (U \,||\, V \,||\, Z) / 2^{128}$$

The inputs to *f1* are different depending on the different protocols.

Numeric Comparison	Out-Of-Band	Passkey Entry
Ca = f1(PKax, PKbx, Na, 0)	Ca = f1(PKax, PKax, Ra, 0)	Cai = f1(PKax, PKbx, Nai, rai)
Cb = f1(PKbx, PKax, Nb, 0)	Cb = f1(PKbx, PKbx, Rb, 0)	Cbi = f1(PKbx, PKax, Nbi, rbi)

Table 7.2: Inputs to f1 for the different protocols

where PKax denotes the x-coordinate of the public key PKa of A. Similarly, PKbx denotes the x-coordinate of the public key PKb of B. Nai is the nonce value of ith round. For each round Nai value is a new 128 bit number. Similarly, rai is one bit value of the passkey expanded to 8 bits (either 0x80 or 0x81).

7.7.2 The Simple Pairing Numeric Verification Function *g*

The Simple Pairing *g* function is defined as follows:

The inputs to the Simple Pairing function *g* are:

U is 192 bits

V is 192 bits

X is 128 bits

Y is 128 bits

The output of the Simple Pairing g function is:

$$g(U, V, X, Y) = \text{SHA-256}(U \,||\, V \,||\, X \,||\, Y) \bmod 2^{32}$$

The numeric verification value is taken as six least significant digits of the 32-bit integer *g*(PKax, PKbx, Na, Nb) where PKax denotes the x-coordinate of the

public key PKa of A and PKbx denotes the x-coordinate of the public key PKb of B.

Output of SHA-256 is truncated to 32 bits by taking the least significant 32 bits of the output of SHA-256. This value is converted to decimal numeric value. The checksum used for numeric comparison is the least significant six digits.

$$\text{Compare Value} = g(U, V, X, Y) \bmod 10^6$$

For example, if output = 0x 01 2e b7 2a then decimal value = 19838762 and the checksum used for numeric comparison is 838762.

7.7.3 The Simple Pairing Key Derivation Function f2

The definition of the Simple Pairing key derivation function makes use of the MAC function HMAC based on SHA-256, which is denoted as HMAC-SHA-256_W with 192-bit key W.

The inputs to the Simple Pairing function *f2* are:

W is 192 bits

N_1 is 128 bits

N_2 is 128 bits

keyID is 32 bits

A_1 is 48 bits

A_2 is 48 bits

The string "btlk" is mapped into keyID using extended ASCII[1] as follows:

keyID[0] = `0110 1011 (lsb)`

keyID[1] = `0110 1100`

keyID[2] = `0111 0100`

keyID[3] = `0110 0010`

KeyID = `0x62746c6b`

The output of the Simple Pairing f2 function is:

$$f2(W, N_1, N_2, \text{KeyID}, A_1, A_2) = \text{HMAC-SHA-256}_W (N1 \,||\, N2 \,||\, \text{KeyID} \,||\, A_1 \,||\, A_2) / 2^{128}$$

The output of *f2* is taken as the 128 most significant (leftmost) bits of the output of HMAC-SHA-256.

1. ISO/IEC 8859-1
(see www.iso.org)

The link key is then calculated as:

LK = f2(DHKey, N_master, N_slave, "btlk", BD_ADDR_master, BD_ADDR_slave)

7.7.4 The Simple Pairing Check Function f3

The definition of the Simple Pairing f3 check function makes use of the MAC function HMAC based on SHA-256, which is denoted as HMAC-SHA-256$_W$ with 192-bit key W.

The inputs to the Simple Pairing function f3 are

W is 192 bits

N_1 is 128 bits

N_2 is 128 bits

R is 128 bits

IOcap is 24 bits

A_1 is 48 bits

A_2 is 48 bits

IOcap is three octets with the most significant octet as the Authentication Requirements parameter, the middle octet as the LMP Out-of-Band Authentication Data parameter, and the least significant octet as the LMP IO capability parameter.

The output of the Simple Pairing *f3* function is:

$f3(W, N_1, N_2, R, IOcap, A_1, A_2) = HMAC\text{-}SHA\text{-}256W\ (N_1 \| N_2 \| R \| IOcap \| A_1 \| A_2) / 2^{128}$

The output of *f3* is taken as the 128 most significant (leftmost) bits of the output of HMAC-SHA-256. The check values are computed with function f3. The inputs to f3 are different depending on the different protocols:

Numeric Comparison	Out-Of-Band	Passkey Entry
Ea = *f3*(DHKey, Na, Nb, 0, IOcapA, A, B)	Ea = *f3*(DHKey, Na, Nb, rb, IOcapA, A, B)	Ea = *f3*(DHKey, Na20, Nb20, rb, IOcapA, A, B)
Eb = *f3*(DHKey, Nb, Na, 0, IOcapB, B, A)	Eb = *f3*(DHKey, Nb, Na, ra, IOcapB, B, A)	Eb = *f3*(DHKey, Nb20, Na20, ra, IOcapB, B, A)

Table 7.3: Inputs to f3 for the different protocols

DHKey denotes the shared secret Diffie-Hellman Key computed as P192(SKa,PKb) by A and as P192(SKb,PKa) by B. Adata denotes the capability data of A and Bdata denotes the capability data of B. In Passkey Entry, the data ra and rb are 6-digit passkey values which are expressed as a 128-bit integer. For instance,

if the 6-digit value of ra is 131313

then R = 0x 00 00 00 00 00 00 00 00 00 00 00 00 00 02 00 f1.

The input A is the BD_ADDR of device A and the input B is the BD_ADDR of device B.

7.7.5 The Simple Pairing AMP Key Derivation Function h2

The definition of the Simple Pairing dedicated AMP key derivation function makes use of the MAC function HMAC based on SHA-256, which is denoted as HMAC-SHA-256$_W$ with 256-bit key W.

The inputs to the Simple Pairing function h2 are as follows:

W is 256 bits

keyID is 32 bits

L is 8 bits

The output of the Simple Pairing *h2* function is as follows:

$h2$(W, keyID, L) = HMAC-SHA-256$_W$ (keyID) / $2^{256-(L*8)}$

For each Dedicated AMP, a fixed value of the key identifier KeyID is specified. A master key MK_{AMP} of length L_{AMP}, $0 \leq L_{AMP} \leq 32$, is computed as

MK_{AMP} = *h2* (GAMP_LK, $keyID_{AMP}$, L_{AMP}).

7.7.5.1 Initial GAMP_LK Creation

The Generic AMP Link Key (GAMP_LK) shall be created every time the link key (LK) is changed or created using the f2 function (see Section 7.7.3). Whenever the GAMP_LK is created, all dedicated AMP link keys associated with the remote BD_ADDR shall be discarded.

A fixed value of the key identifier KeyID is specified ('gamp'). The string 'gamp' is mapped into keyID using extended ASCII[1] as follows:

keyID[0] = 0111 0000 (lsb)
keyID[1] = 0110 1101
keyID[2] = 0110 0001
keyID[3] = 0110 0111
keyID = 0x67616d70

The initial GAMP_LK shall be created in the Host using the h2 function.

GAMP_LK = *h2* (W, 'gamp', 32)

Where W = LK || LK

1. (see www.iso.org)ISO_8859-1

7.7.5.2 Dedicated AMP Link Key Generation

Each AMP uses a defined keyID and keyLength. Both values are defined in the Assigned numbers page.

A dedicated AMP link key is computed as

Dedicated_AMP_Link_Key = *h2* (GAMP_LK, keyID, keyLength)

7.7.5.3 GAMP_LK Regeneration

Each time the GAMP_LK is used to generate a valid dedicated AMP link key it shall be regenerated by computing

New_ GAMP_LK = *h2* (GAMP_LK, 'gamp', 32)

and then setting

GAMP_LK = New_GAMP_LK

7.7.5.4 Debug AMP Link Key Generation

When the BR/EDR link key is a debug link key, the dedicated AMP link keys are set equal to the keyLength least significant octets of the Generic AMP link key. When debug link keys are used, the Generic AMP link key shall not be regenerated.

8 AMP SECURITY

8.1 CREATION OF THE INITIAL GENERIC AMP LINK KEY

AMP security starts any time the BR/EDR link key is created or changed. This may be as the result of the f2 function during Phase 4 of the Secure Simple Pairing process (see Section 7.7.3) or due to a change connection link key procedure. The initial Generic AMP link key, GAMP_LK, is created with the h2 function using the BR/EDR Link Key concatenated together with itself to form a 256-bit value and with the KeyID 'gamp' (see Section 7.7.5.1). The Generic AMP Link Key (GAMP_LK) is stored in the security database alongside the BR/EDR Link Key once pairing has completed.

Whenever the Generic AMP Link Key is created, all Dedicated AMP Link Keys associated with the remote device shall be discarded and any active AMP Physical Links to the remote device shall be disconnected. Note that when a Host initiates a Change Connection Link Key procedure, all active AMP physical links between the two devices will be disconnected.

Since AMP security does not affect the BR/EDR Link Key, backwards compatibility is maintained for devices that support the Generic AMP feature with devices that do not. The Generic AMP Link Key is generated as part of Secure Simple Pairing regardless of whether the devices both support the Generic AMP feature or any AMP in common.

8.2 CREATION OF DEDICATED AMP LINK KEYS

When an AMP is used for the first time, a dedicated AMP key is created by the AMP Manager for that AMP type using the new Secure Simple Pairing function h2 and a KeyID for the AMP type. The length of the Dedicated AMP Link Key depends on the AMP Type. If the Dedicated AMP Link Key already exists due to a previous connection the AMP link key is not created and the stored key is reused.

The Dedicated AMP Link Key is sent down to the PAL in the *HCI Create Physical Link* and *HCI Accept Physical Link* commands (see [Vol. 2], Part E Section 7.1.37 and [Vol. 2], Part E Section 7.1.38). Each PAL is responsible for establishing security from the Dedicated AMP Link Key. Note that a Dedicated AMP Link Key may be used for multiple sessions over the same AMP.

Each time a dedicated AMP key is created and the AMP Create Physical Link sequence completes successfully (see [Vol. 3], Part E Section 2.3.3), the Generic AMP Link Key is updated. This is performed using the h2 function with KeyID 'gamp.' If the AMP Create Physical Link sequence does not complete successfully, the dedicated AMP link key shall be discarded and the Generic AMP Link Key shall not be updated.

Figure 8.1The following figure shows an overview of the AMP key generation in the Host.

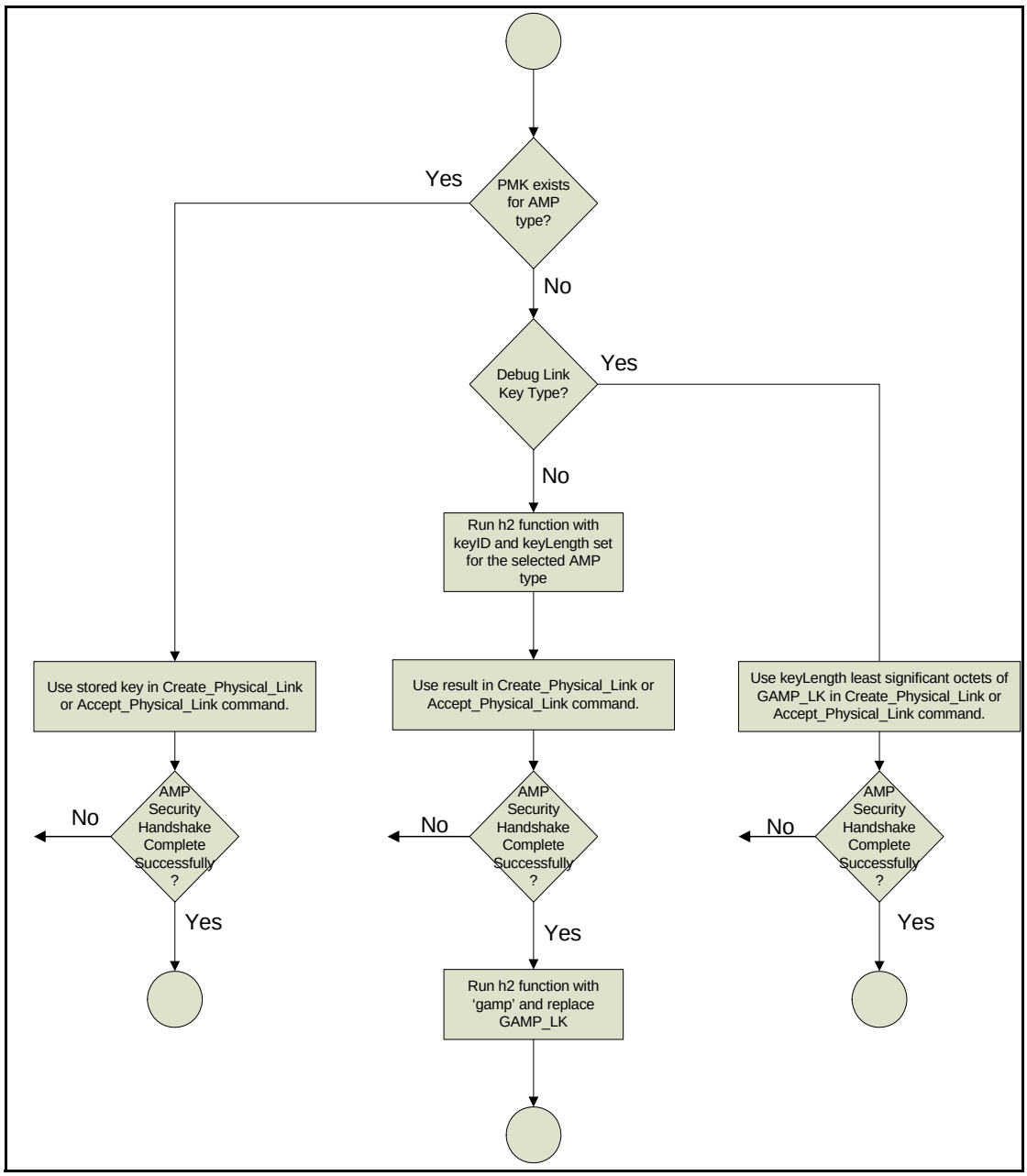

Figure 8.1: AMP key generation in Host

Creation of the dedicated AMP keys and updates to the Generic AMP Link Key are the responsibility of the AMP Manager (see [Vol. 3], Part E Section 2.3.3).

8.3 DEBUG CONSIDERATIONS

Since the AMP architecture requires encryption to be enabled on each AMP, in order to support sniffers for debug as well as to enable testing over the air, pro-

visions need to be made in the AMP architecture to support debug combination keys. In this document, this is supported in two ways:

- Passing the link key type along with the link key (and length) in the HCI_Create_Physical_Link and HCI_Accept_Physical_Link commands and
- Requiring that the GAMP_LK is used as the dedicated AMP key when the key type is set to "debug combination key."

9 LIST OF FIGURES

Figure 3.1: Generation of unit key. When the unit key has been exchanged, the initialization key is discarded in both devices. 929
Figure 3.2: Generating a combination key. The old link key (K) is discarded after the exchange of a new combination key has succeeded 930
Figure 3.3: Master link key distribution and computation of the corresponding encryption key. 933
Figure 4.1: Stream ciphering for Bluetooth with E0. 934
Figure 4.2: Functional description of the encryption procedure 937
Figure 4.3: Concept of the encryption engine. 938
Figure 4.4: Overview of the operation of the encryption engine. Between each start of a packet (TX or RX), the LFSRs are re-initialized. 939
Figure 4.5: Arranging the input to the LFSRs. 942
Figure 4.6: Distribution of the 128 last generated output symbols within the LFSRs. 943
Figure 5.1: Challenge-response for the Bluetooth. 944
Figure 5.2: Challenge-response for symmetric key systems. 945
Figure 6.1: Flow of data for the computation of 948
Figure 6.2: One round in and 950
Figure 6.3: Key scheduling in 951
Figure 6.4: Key generating algorithm and its two modes. Mode 1 is used for unit and combination keys, while mode 2 is used for and 953
Figure 6.5: Generation of the encryption key 953
Figure 7.1: Simple Pairing Security Phases 954
Figure 7.2: Public Key Exchange Details 956
Figure 7.3: Authentication Stage 1 (High Level) 956
Figure 7.4: Authentication Stage 1: Numeric Comparison Protocol Details 957
Figure 7.5: Authentication Stage 1: Out of Band Details 959
Figure 7.6: Authentication Stage 1: Passkey Entry Details 961
Figure 7.7: Authentication Stage 2 962
Figure 7.8: Link Key Calculation 963
Figure 8.1: AMP key generation in Host 971

Specification Volume 3

SPECIFICATION OF THE *BLUETOOTH* SYSTEM

Wireless Connections Made Easy

Core System Package

[Host volume]

Covered Core Package version:
3.0 + HS

Bluetooth®

Revision History

The Revision History is shown in the “Appendix” on page 47[vol. 0].

Contributors

The persons who contributed to this specification are listed in the “Appendix” on page 47[vol. 0].

Web Site

This specification can also be found on the official Bluetooth web site: http://www.bluetooth.com

Disclaimer and Copyright Notice

The copyright in these specifications is owned by the Promoter Members of Bluetooth SIG, Inc. (“Bluetooth SIG”). Use of these specifications and any related intellectual property (collectively, the “Specification”), is governed by the Promoters Membership Agreement among the Promoter Members and Bluetooth SIG (the “Promoters Agreement”), certain membership agreements between Bluetooth SIG and its Adopter and Associate Members (the “Membership Agreements”) and the Bluetooth Specification Early Adopters Agreements (“1.2 Early Adopters Agreements”) among Early Adopter members of the unincorporated Bluetooth special interest group and the Promoter Members (the “Early Adopters Agreement”). Certain rights and obligations of the Promoter Members under the Early Adopters Agreements have been assigned to Bluetooth SIG by the Promoter Members.

Use of the Specification by anyone who is not a member of Bluetooth SIG or a party to an Early Adopters Agreement (each such person or party, a “Member”), is prohibited. The legal rights and obligations of each Member are governed by their applicable Membership Agreement, Early Adopters Agreement or Promoters Agreement. No license, express or implied, by estoppel or otherwise, to any intellectual property rights are granted herein.

Any use of the Specification not in compliance with the terms of the applicable Membership Agreement, Early Adopters Agreement or Promoters Agreement is prohibited and any such prohibited use may result in termination of the applicable Membership Agreement or Early Adopters Agreement and other liability permitted by the applicable agreement or by applicable law to Bluetooth SIG or any of its members for patent, copyright and/or trademark infringement.

THE SPECIFICATION IS PROVIDED “AS IS” WITH NO WARRANTIES WHATSOEVER, INCLUDING ANY WARRANTY OF MERCHANTABILITY, NONINFRINGEMENT, FITNESS FOR ANY PARTICULAR PURPOSE, SATISFACTORY QUALITY, OR REASONABLE SKILL OR CARE, OR ANY WARRANTY ARISING OUT OF ANY COURSE OF DEALING, USAGE, TRADE PRACTICE, PROPOSAL, SPECIFICATION OR SAMPLE.

Each Member hereby acknowledges that products equipped with the Bluetooth® technology (“Bluetooth® Products”) may be subject to various regulatory controls under the laws and regulations of various governments worldwide. Such laws and regulatory controls may govern, among other things, the combination, operation, use, implementation and distribution of Bluetooth® Products. Examples of such laws and regulatory controls include, but are not limited to, airline regulatory controls, telecommunications regulations, technology transfer controls and health and safety regulations. Each Member is solely responsible for the compliance by their Bluetooth® Products with any such laws and regulations and for obtaining any and all required authorizations, permits, or licenses for their Bluetooth® Products related to such regulations within the applicable jurisdictions. Each Member acknowledges that nothing in the Specification provides any information or assistance in connection with securing such compliance, authorizations or licenses. NOTHING IN THE SPECIFICATION CREATES ANY WARRANTIES, EITHER EXPRESS OR IMPLIED, REGARDING SUCH LAWS OR REGULATIONS.

ALL LIABILITY, INCLUDING LIABILITY FOR INFRINGEMENT OF ANY INTELLECTUAL PROPERTY RIGHTS OR FOR NONCOMPLIANCE WITH LAWS, RELATING TO USE OF THE SPECIFICATION IS EXPRESSLY DISCLAIMED. BY USE OF THE SPECIFICATION, EACH MEMBER EXPRESSLY WAIVES ANY CLAIM AGAINST BLUETOOTH SIG AND ITS PROMOTER MEMBERS RELATED TO USE OF THE SPECIFICATION.

Bluetooth SIG reserves the right to adopt any changes or alterations to the Specification as it deems necessary or appropriate.

Copyright © 1999 – 2009

Ericsson AB,
Lenovo,
Intel Corporation,
Microsoft Corporation,
Motorola, Inc.,
Nokia Corporation,
Toshiba Corporation

*Third-party brands and names are the property of their respective owners.

CONTENTS

Part A
LOGICAL LINK CONTROL AND ADAPTATION PROTOCOL SPECIFICATION

1 Introduction 26
1.1 L2CAP Features 26
1.2 Assumptions 29
1.3 Scope 30
1.4 Terminology 30

2 General Operation 34
2.1 Channel Identifiers 34
2.2 Operation Between Devices 35
2.3 Operation Between Layers 36
2.4 Modes of Operation 37
2.5 Mapping Channels to Logical Links 39

3 Data Packet Format 40
3.1 Connection-oriented Channel in Basic L2CAP Mode 40
3.2 Connectionless Data Channel in Basic L2CAP Mode 41
3.3 Connection-oriented Channel in Retransmission/Flow Control/ Streaming Modes 41
3.3.1 L2CAP header fields 42
3.3.2 Control field (2 or 4 octets) 44
3.3.3 L2CAP SDU length field (2 octets) 46
3.3.4 Information payload field 46
3.3.5 Frame check sequence (2 octets) 47
3.3.6 Invalid frame detection 48
3.3.7 Invalid Frame Detection Algorithm 48

4 Signaling Packet Formats 50
4.1 Command Reject (code 0x01) 52
4.2 Connection Request (code 0x02) 53
4.3 Connection Response (code 0x03) 54
4.4 Configuration Request (code 0x04) 56
4.5 Configuration Response (code 0x05) 58
4.6 Disconnection Request (code 0x06) 60
4.7 Disconnection Response (code 0x07) 61
4.8 Echo Request (code 0x08) 62
4.9 Echo Response (code 0x09) 62
4.10 Information Request (code 0x0A) 62
4.11 Information Response (code 0x0B) 63

4.12 Extended Feature Mask 65
4.13 Fixed Channels Supported 65
4.14 Create Channel Request (code 0x0C) 66
4.15 Create Channel Response (code 0x0D) 67
4.16 Move Channel Request (code 0x0E) 68
4.17 Move Channel Response (code 0x0F) 69
4.18 Move Channel Confirmation (code 0x10) 70
4.19 Move Channel Confirmation Response (code 0x11) 71

5 Configuration Parameter Options 72
5.1 Maximum Transmission Unit (MTU) 72
5.2 Flush Timeout Option 74
5.3 Quality of Service (QoS) Option 75
5.4 Retransmission and Flow Control Option 78
5.5 Frame Check Sequence (FCS) Option 84
5.6 Extended Flow Specification Option 85
5.7 Extended Window Size Option 89

6 State Machine 91
6.1 General rules for the state machine: 91
6.1.1 CLOSED state 92
6.1.2 WAIT_CONNECT_RSP state 94
6.1.3 WAIT_CONNECT state 95
6.1.4 CONFIG state 95
6.1.5 OPEN state 101
6.1.6 WAIT_DISCONNECT state 102
6.1.7 WAIT_CREATE_RSP state 103
6.1.8 WAIT_CREATE state 103
6.1.9 WAIT_MOVE_RSP state 104
6.1.10 WAIT_MOVE state 106
6.1.11 WAIT_MOVE_CONFIRM state 107
6.1.12 WAIT_CONFIRM_RSP state 107
6.2 Timers events 107
6.2.1 RTX 107
6.2.2 ERTX 109

7 General Procedures 113
7.1 Configuration Process 113
7.1.1 Request path 114
7.1.2 Response path 114
7.1.3 Lockstep Configuration Process 115
7.2 Fragmentation and Recombination 118

7.2.1 Fragmentation of L2CAP PDUs 118
7.2.2 Recombination of L2CAP PDUs 119
7.3 Encapsulation of SDUs 119
7.3.1 Segmentation of L2CAP SDUs 120
7.3.2 Reassembly of L2CAP SDUs 120
7.3.3 Segmentation and fragmentation 121
7.4 Delivery of Erroneous L2CAP SDUs 123
7.5 Operation with Flushing For BR/EDR Controller 123
7.6 Connectionless Data Channel 124
7.7 Operation Collision Resolution 126
7.8 Aggregating Best Effort Extended Flow Specifications 126
7.9 Prioritizing Data over HCI 127
7.10 Supporting Extended Flow Specification for BR/EDR Controllers 128

8 Procedures for Flow Control and Retransmission 130
8.1 Information Retrieval 130
8.2 Function of PDU Types for Flow Control and Retransmission 130
8.2.1 Information frame (I-frame) 130
8.2.2 Supervisory Frame (S-frame) 130
8.2.2.1 Receiver Ready (RR) 130
8.2.2.2 Reject (REJ) 131
8.3 Variables and Sequence Numbers 131
8.3.1 Sending peer 132
8.3.1.1 Send sequence number TxSeq 132
8.3.1.2 Send state variable NextTXSeq 132
8.3.1.3 Acknowledge state variable ExpectedAckSeq 132
8.3.2 Receiving peer 133
8.3.2.1 Receive sequence number ReqSeq 133
8.3.2.2 Receive state variable, ExpectedTxSeq 134
8.3.2.3 Buffer state variable BufferSeq 134
8.4 Retransmission Mode 135
8.4.1 Transmitting frames 135
8.4.1.1 Last received R was set to zero 135
8.4.1.2 Last received R was set to one 138
8.4.2 Receiving I-frames 138
8.4.3 I-frames pulled by the SDU reassembly function 138
8.4.4 Sending and receiving acknowledgements 139
8.4.4.1 Sending acknowledgements 139
8.4.4.2 Receiving acknowledgements 139
8.4.5 Receiving REJ frames 140
8.4.6 Waiting acknowledgements 140

8.4.7 Exception conditions 140
8.4.7.1 TxSeq Sequence error 140
8.4.7.2 ReqSeq Sequence error 141
8.4.7.3 Timer recovery error 141
8.4.7.4 Invalid frame 141
8.5 Flow Control Mode 142
8.5.1 Transmitting I-frames 142
8.5.2 Receiving I-frames 143
8.5.3 I-frames pulled by the SDU reassembly function 143
8.5.4 Sending and receiving acknowledgements 143
8.5.4.1 Sending acknowledgements 143
8.5.4.2 Receiving acknowledgements 143
8.5.5 Waiting acknowledgements 144
8.5.6 Exception conditions 144
8.5.6.1 TxSeq Sequence error 144
8.5.6.2 ReqSeq Sequence error 145
8.5.6.3 Invalid frame 145
8.6 Enhanced Retransmission Mode 145
8.6.1 Function Of PDU Types 146
8.6.1.1 Receiver Ready (RR) 146
8.6.1.2 Reject (REJ) 146
8.6.1.3 Receiver Not Ready (RNR) 146
8.6.1.4 Selective Reject (SREJ) 147
8.6.1.5 Functions of the Poll (P) and Final (F) bits. 147
8.6.2 Rules For Timers 147
8.6.2.1 Timer Rules for BR/EDR Controller 148
8.6.2.2 Timer Rules for AMP Controllers 148
8.6.2.3 Timer Values used After a Move Operation 149
8.6.3 General Rules for the State Machine 150
8.6.4 State Diagram 151
8.6.5 States Tables 152
8.6.5.1 State Machines 152
8.6.5.2 States 152
8.6.5.3 Variables and Timers 153
8.6.5.4 Events 155
8.6.5.5 Conditions 156
8.6.5.6 Actions 158
8.6.5.7 XMIT State Table 164
8.6.5.8 WAIT_F State Table 164
8.6.5.9 RECV State Table 166
8.6.5.10 REJ_SENT State Table 168
8.6.5.11 SREJ_SENT State Table 172
8.7 Streaming Mode 175
8.7.1 Transmitting I-frames 176

8.7.2 Receiving I-frames 176
8.7.3 Exception Conditions....176
8.7.3.1 TxSeq Sequence error....176
9 Procedure for AMP Channel Creation and Handling 177
9.1 Create Channel....177
9.2 Move Channel....180
9.2.1 Move Channel Protocol Procedure with Enhanced Retransmission Mode....181
9.2.1.1 Enhanced Retransmission Mode Procedures During A Move Operation 183
9.2.2 Move Channel Protocol Procedure with Streaming Mode (Initiator is Data Source)....184
9.2.3 Move Channel Protocol Procedure with Streaming Mode (Initiator is Data Sink) 185
9.3 Disconnect Channel....188
10 List of Figures....189
11 List of Tables 191

Part B
SERVICE DISCOVERY PROTOCOL (SDP) SPECIFICATION

1 Introduction 201
1.1 General Description 201
1.2 Motivation....201
1.3 Requirements....201
1.4 Non-requirements and Deferred Requirements 202
1.5 Conventions 202
1.5.1 Bit And Byte Ordering Conventions....202
2 Overview 203
2.1 SDP Client-Server Interaction 203
2.2 Service Record....205
2.3 Service Attribute....206
2.3.1 Attribute ID 206
2.3.2 Attribute Value 207
2.4 Service Class 207
2.4.1 A Printer Service Class Example 208
2.5 Searching for Services....208
2.5.1 UUID....208
2.5.2 Service Search Patterns....209
2.6 Browsing for Services 209
2.6.1 Example Service Browsing Hierarchy 210

3 Data Representation 212
3.1 Data Element 212
3.2 Data Element Type Descriptor 212
3.3 Data Element Size Descriptor 213
3.4 Data Element Examples 214
4 Protocol Description 215
4.1 Transfer Byte Order 215
4.2 Protocol Data Unit Format 215
4.3 Partial Responses and Continuation State 217
4.4 Error Handling 217
4.4.1 SDP_ErrorResponse PDU 218
4.5 ServiceSearch Transaction 219
4.5.1 SDP_ServiceSearchRequest PDU 219
4.5.2 SDP_ServiceSearchResponse PDU 220
4.6 ServiceAttribute Transaction 222
4.6.1 SDP_ServiceAttributeRequest PDU 222
4.6.2 SDP_ServiceAttributeResponse PDU 224
4.7 ServiceSearchAttribute Transaction 225
4.7.1 SDP_ServiceSearchAttributeRequest PDU 225
4.7.2 SDP_ServiceSearchAttributeResponse PDU 227
5 Service Attribute Definitions 229
5.1 Universal Attribute Definitions 229
5.1.1 ServiceRecordHandle Attribute 229
5.1.2 ServiceClassIDList Attribute 230
5.1.3 ServiceRecordState Attribute 230
5.1.4 ServiceID Attribute 230
5.1.5 ProtocolDescriptorList Attribute 231
5.1.6 AdditionalProtocolDescriptorList Attribute 232
5.1.7 BrowseGroupList Attribute 233
5.1.8 LanguageBaseAttributeIDList Attribute 233
5.1.9 ServiceInfoTimeToLive Attribute 234
5.1.10 ServiceAvailability Attribute 235
5.1.11 BluetoothProfileDescriptorList Attribute 235
5.1.12 DocumentationURL Attribute 236
5.1.13 ClientExecutableURL Attribute 236
5.1.14 IconURL Attribute 236
5.1.15 ServiceName Attribute 237
5.1.16 ServiceDescription Attribute 238
5.1.17 ProviderName Attribute 238

5.1.18 Reserved Universal Attribute IDs 238
5.2 ServiceDiscoveryServer Service Class Attribute Definitions....238
5.2.1 ServiceRecordHandle Attribute 238
5.2.2 ServiceClassIDList Attribute 239
5.2.3 VersionNumberList Attribute 239
5.2.4 ServiceDatabaseState Attribute 239
5.2.5 Reserved Attribute IDs 240
5.3 BrowseGroupDescriptor Service Class Attribute Definitions....240
5.3.1 ServiceClassIDList Attribute 240
5.3.2 GroupID Attribute 241
5.3.3 Reserved Attribute IDs 241
6 Security 242

Part C
GENERIC ACCESS PROFILE

1 Introduction 264
1.1 Scope 264
1.2 Symbols and conventions 264
1.2.1 Requirement status symbols 264
1.2.2 Signaling diagram conventions 265
1.2.3 Notation for timers and counters 265
2 Profile overview 266
2.1 Profile stack 266
2.2 Configurations and roles 266
2.3 User requirements and scenarios 267
2.4 Profile fundamentals 268
2.5 Conformance 268
3 User interface aspects 269
3.1 The user interface level 269
3.2 Representation of Bluetooth parameters 269
3.2.1 Bluetooth device address (BD_ADDR) 269
3.2.1.1 Definition 269
3.2.1.2 Term on user interface level 269
3.2.1.3 Representation 269
3.2.2 Bluetooth device name (the user-friendly name) 269
3.2.2.1 Definition 269
3.2.2.2 Term on user interface level 270
3.2.2.3 Representation 270
3.2.3 Bluetooth passkey (Bluetooth PIN) 270
3.2.3.1 Definition 270

3.2.3.2 Terms at user interface level 270
3.2.3.3 Representation 270
3.2.4 Class of Device 271
3.2.4.1 Definition 271
3.2.4.2 Term on user interface level 272
3.2.4.3 Representation 272
3.2.4.4 Usage 272
3.3 Pairing 272
4 Modes 273
4.1 Discoverability modes 273
4.1.1 Non-discoverable mode 274
4.1.1.1 Definition 274
4.1.1.2 Term on UI-level 274
4.1.2 Limited discoverable mode 274
4.1.2.1 Definition 274
4.1.2.2 Conditions 275
4.1.2.3 Term on UI-level 275
4.1.3 General discoverable mode 275
4.1.3.1 Definition 275
4.1.3.2 Conditions 276
4.1.3.3 Term on UI-level 276
4.2 Connectability modes 277
4.2.1 Non-connectable mode 277
4.2.1.1 Definition 277
4.2.1.2 Term on UI-level 277
4.2.2 Connectable mode 277
4.2.2.1 Definition 277
4.2.2.2 Term on UI-level 278
4.3 Bondable modes 279
4.3.1 Non-bondable mode 279
4.3.1.1 Definition 279
4.3.1.2 Term on UI-level 279
4.3.2 Bondable mode 279
4.3.2.1 Definition 279
4.3.2.2 Term on UI-level 280
5 Security Aspects 281
5.1 Authentication 281
5.1.1 Purpose 281
5.1.2 Term on UI level 281
5.1.3 Procedure 282
5.1.4 Conditions 282
5.2 Security modes 282

5.2.1 Legacy Security Modes 283
5.2.1.1 Security mode 1 (non-secure) 284
5.2.1.2 Security mode 2 (service level enforced security) 284
5.2.1.3 Security modes 3 (link level enforced security) 284
5.2.2 Security mode 4 (service level enforced security) 285
5.2.2.1 Security for Access to Remote Service (Initiating Side) 286
5.2.2.2 Security for Access to Local Service by Remote Device (Responding Side) 289
5.2.2.3 Simple Pairing after Authentication Failure 291
5.2.2.4 IO Capabilities 292
5.2.2.5 Mapping of Input / Output Capabilities to IO Capability 293
5.2.2.6 IO and OOB Capability Mapping to Authentication Stage 1 Method 294
5.2.2.7 Out of Band (OOB) 295
5.2.2.8 Security Database 296

6 Idle Mode Procedures 300
6.1 General inquiry 300
6.1.1 Purpose 300
6.1.2 Term on UI level 300
6.1.3 Description 301
6.1.4 Conditions 301
6.2 Limited inquiry 301
6.2.1 Purpose 301
6.2.2 Term on UI level 302
6.2.3 Description 302
6.2.4 Conditions 302
6.3 Name discovery 303
6.3.1 Purpose 303
6.3.2 Term on UI level 303
6.3.3 Description 303
6.3.3.1 Name request 303
6.3.3.2 Name discovery 303
6.3.4 Conditions 304
6.4 Device discovery 304
6.4.1 Purpose 304
6.4.2 Term on UI level 304
6.4.3 Description 305
6.4.4 Conditions 305

6.5 Bonding 305
6.5.1 Purpose 305
6.5.2 Term on UI level 305
6.5.3 Description 306
6.5.3.1 General Bonding 306
6.5.3.2 Dedicated Bonding 306
6.5.4 Conditions 307
7 Establishment procedures 309
7.1 Link establishment 309
7.1.1 Purpose 309
7.1.2 Term on UI level 309
7.1.3 Description 310
7.1.3.1 B in security mode 1, 2, or 4 310
7.1.3.2 B in security mode 3 311
7.1.4 Conditions 311
7.2 Channel establishment 312
7.2.1 Purpose 312
7.2.2 Term on UI level 312
7.2.3 Description 312
7.2.3.1 B in security mode 2 or 4 313
7.2.3.2 B in security mode 1 or 3 313
7.2.4 Conditions 313
7.3 Connection establishment 314
7.3.1 Purpose 314
7.3.2 Term on UI level 314
7.3.3 Description 314
7.3.3.1 B in security mode 2 or 4 314
7.3.3.2 B in security mode 1 or 3 315
7.3.4 Conditions 315
7.4 Establishment of additional connection 315
8 Extended Inquiry Response Data Format 316
8.1 EIR Data Type Definitions 317
8.1.1 Service Class UUIDs 317
8.1.2 Local Name 318
8.1.3 Flags 318
8.1.4 Manufacturer Specific Data 319
8.1.5 TX Power Level 319
8.1.6 Secure Simple Pairing Out of Band (OOB) 319
8.2 Example Extended Inquiry Response 320

9 Definitions 322
9.1 General definitions 322
9.2 Connection-related definitions 322
9.3 Device-related definitions 323
9.4 Procedure-related definitions 324
9.5 Security-related definitions 324

10 Appendix A (Normative): Timers and constants 326

11 Appendix B (Informative): Information Flows of Related Procedures 327
11.1 LMP-authentication 327
11.2 LMP-pairing 328
11.3 Service discovery 329

12 References 330

Part D
TEST SUPPORT

1 Test Methodology 335
1.1 BR/EDR Test Scenarios 335
1.1.1 Test setup 335
1.1.2 Transmitter Test 336
1.1.2.1 Packet Format 337
1.1.2.2 Pseudorandom Sequence 338
1.1.2.3 Control of Transmit Parameters 338
1.1.2.4 Power Control 339
1.1.2.5 Switch Between Different Frequency Settings 339
1.1.2.6 Adaptive Frequency Hopping 340
1.1.3 LoopBack test 340
1.1.4 Pause test 344
1.2 AMP Test Scenarios 345
1.2.1 Methodology Overview 345
1.2.1.1 Initiation Example Description 346
1.2.2 Control and Configuration 346
1.2.3 AMP Test Manager 347
1.2.4 Test Commands/Events Format 348
1.2.5 AMP Test Manager Commands/Events 349
1.2.5.1 AMP Command Rejected Event 350
1.2.5.2 AMP Discover Request 351
1.2.5.3 AMP Discover Response Event 351
1.2.5.4 AMP Read PHY Capability Bit Map Command 352

1.2.5.5 AMP Read PHY Capability Bit Map Response Event 353
1.3 References 353
2 Test Control Interface (TCI) 354
2.1 Introduction 354
2.1.1 Terms used 354
2.1.2 Usage of the Interface 354
2.2 TCI Configurations 355
2.2.1 Bluetooth RF requirements 355
2.2.1.1 Required interfaces 355
2.2.2 Bluetooth protocol requirements 356
2.2.2.1 Required interfaces 356
2.2.3 Bluetooth profile requirements 357
2.2.3.1 Required interfaces 357
2.3 TCI Configuration and Usage 358
2.3.1 Transport layers 358
2.3.1.1 Physical bearer 358
2.3.1.2 Software bearer 358
2.3.2 Baseband and link manager qualification 359
2.3.3 HCI qualification 361

Part E
AMP MANAGER PROTOCOL SPECIFICATION

1 Introduction 366
1.1 General Description 366
2 General Operation 367
2.1 Basic Capabilities 367
2.2 AMP Manager Channel Over L2CAP 368
2.3 Using the AMP Manager Protocol 369
2.3.1 Discovering a Remote AMP Manager 369
2.3.2 Discovering Available Controllers on a Remote Device 369
2.3.3 Creation of AMP Physical Links 370
2.4 Controller IDs 371
2.5 Controller Types 371
3 Protocol Description 372
3.1 Packet Formats 372
3.2 AMP Command Reject (Code 0x01) 373
3.3 AMP Discover Request (Code 0x02) 374
3.4 AMP Discover Response (Code 0x03) 375

3.5 AMP Change Notify (Code 0x04) 379
3.6 AMP Change Response (Code 0x05) 379
3.7 AMP Get Info Request (Code 0x06) 380
3.8 AMP Get Info Response (Code 0x07) 380
3.9 AMP Get AMP Assoc Request (Code 0x08) 382
3.10 AMP Get AMP Assoc Response (Code 0x09) 383
3.11 AMP Create Physical Link Request (Code 0x0A) 384
3.12 AMP Create Physical Link Response (Code 0x0B) 385
3.13 AMP Disconnect Physical Link Request (Code 0x0C) 386
3.14 AMP Disconnect Physical Link Response (Code 0x0D) 387
3.15 Create Physical Link Collision Resolution 388
3.16 Response Timeout 388
3.17 Unexpected BR/EDR Physical Link Disconnect 389

Core System Package [Host volume]

Part A

LOGICAL LINK CONTROL AND ADAPTATION PROTOCOL SPECIFICATION

The Bluetooth logical link control and adaptation protocol (L2CAP) supports higher level protocol multiplexing, packet segmentation and reassembly, and the conveying of quality of service information. The protocol state machine, packet format, and composition are described in this document.

CONTENTS

1 Introduction 26
1.1 L2CAP Features 26
1.2 Assumptions 29
1.3 Scope 30
1.4 Terminology 30
2 General Operation 34
2.1 Channel Identifiers 34
2.2 Operation Between Devices 35
2.3 Operation Between Layers 36
2.4 Modes of Operation 37
2.5 Mapping Channels to Logical Links 39
3 Data Packet Format 40
3.1 Connection-oriented Channel in Basic L2CAP Mode 40
3.2 Connectionless Data Channel in Basic L2CAP Mode 41
3.3 Connection-oriented Channel in Retransmission/Flow Control/ Streaming Modes 41
3.3.1 L2CAP header fields 42
3.3.2 Control field (2 or 4 octets) 44
3.3.3 L2CAP SDU length field (2 octets) 46
3.3.4 Information payload field 46
3.3.5 Frame check sequence (2 octets) 47
3.3.6 Invalid frame detection 48
3.3.7 Invalid Frame Detection Algorithm 48
4 Signaling Packet Formats 50
4.1 Command Reject (code 0x01) 52
4.2 Connection Request (code 0x02) 53
4.3 Connection Response (code 0x03) 54
4.4 Configuration Request (code 0x04) 56
4.5 Configuration Response (code 0x05) 58
4.6 Disconnection Request (code 0x06) 60
4.7 Disconnection Response (code 0x07) 61
4.8 Echo Request (code 0x08) 62
4.9 Echo Response (code 0x09) 62
4.10 Information Request (code 0x0A) 62
4.11 Information Response (code 0x0B) 63
4.12 Extended Feature Mask 65
4.13 Fixed Channels Supported 65
4.14 Create Channel Request (code 0x0C) 66

4.15 Create Channel Response (code 0x0D) 67
4.16 Move Channel Request (code 0x0E) 68
4.17 Move Channel Response (code 0x0F) 69
4.18 Move Channel Confirmation (code 0x10) 70
4.19 Move Channel Confirmation Response (code 0x11) 71

5 Configuration Parameter Options 72
5.1 Maximum Transmission Unit (MTU) 72
5.2 Flush Timeout Option 74
5.3 Quality of Service (QoS) Option 75
5.4 Retransmission and Flow Control Option 78
5.5 Frame Check Sequence (FCS) Option 84
5.6 Extended Flow Specification Option 85
5.7 Extended Window Size Option 89

6 State Machine 91
6.1 General rules for the state machine: 91
6.1.1 CLOSED state 92
6.1.2 WAIT_CONNECT_RSP state 94
6.1.3 WAIT_CONNECT state 95
6.1.4 CONFIG state 95
6.1.5 OPEN state 101
6.1.6 WAIT_DISCONNECT state 102
6.1.7 WAIT_CREATE_RSP state 103
6.1.8 WAIT_CREATE state 103
6.1.9 WAIT_MOVE_RSP state 104
6.1.10 WAIT_MOVE state 106
6.1.11 WAIT_MOVE_CONFIRM state 107
6.1.12 WAIT_CONFIRM_RSP state 107
6.2 Timers events 107
6.2.1 RTX 107
6.2.2 ERTX 109

7 General Procedures 113
7.1 Configuration Process 113
7.1.1 Request path 114
7.1.2 Response path 114
7.1.3 Lockstep Configuration Process 115
7.2 Fragmentation and Recombination 118
7.2.1 Fragmentation of L2CAP PDUs 118
7.2.2 Recombination of L2CAP PDUs 119
7.3 Encapsulation of SDUs 119

7.3.1 Segmentation of L2CAP SDUs 120
7.3.2 Reassembly of L2CAP SDUs....120
7.3.3 Segmentation and fragmentation 121
7.4 Delivery of Erroneous L2CAP SDUs....123
7.5 Operation with Flushing For BR/EDR Controller....123
7.6 Connectionless Data Channel....124
7.7 Operation Collision Resolution....126
7.8 Aggregating Best Effort Extended Flow Specifications 126
7.9 Prioritizing Data over HCI....127
7.10 Supporting Extended Flow Specification for BR/EDR Controllers 128

8 Procedures for Flow Control and Retransmission 130
8.1 Information Retrieval....130
8.2 Function of PDU Types for Flow Control and Retransmission....130
8.2.1 Information frame (I-frame) 130
8.2.2 Supervisory Frame (S-frame)....130
8.2.2.1 Receiver Ready (RR)....130
8.2.2.2 Reject (REJ) 131
8.3 Variables and Sequence Numbers....131
8.3.1 Sending peer....132
8.3.1.1 Send sequence number TxSeq 132
8.3.1.2 Send state variable NextTXSeq....132
8.3.1.3 Acknowledge state variable ExpectedAckSeq 132
8.3.2 Receiving peer 133
8.3.2.1 Receive sequence number ReqSeq 133
8.3.2.2 Receive state variable, ExpectedTxSeq 134
8.3.2.3 Buffer state variable BufferSeq 134
8.4 Retransmission Mode 135
8.4.1 Transmitting frames....135
8.4.1.1 Last received R was set to zero....135
8.4.1.2 Last received R was set to one....138
8.4.2 Receiving I-frames 138
8.4.3 I-frames pulled by the SDU reassembly function 138
8.4.4 Sending and receiving acknowledgements 139
8.4.4.1 Sending acknowledgements 139
8.4.4.2 Receiving acknowledgements 139
8.4.5 Receiving REJ frames....140
8.4.6 Waiting acknowledgements....140
8.4.7 Exception conditions 140
8.4.7.1 TxSeq Sequence error....140
8.4.7.2 ReqSeq Sequence error 141

8.4.7.3 Timer recovery error 141
8.4.7.4 Invalid frame 141
8.5 Flow Control Mode 142
8.5.1 Transmitting I-frames 142
8.5.2 Receiving I-frames 143
8.5.3 I-frames pulled by the SDU reassembly function 143
8.5.4 Sending and receiving acknowledgements 143
8.5.4.1 Sending acknowledgements 143
8.5.4.2 Receiving acknowledgements 143
8.5.5 Waiting acknowledgements 144
8.5.6 Exception conditions 144
8.5.6.1 TxSeq Sequence error 144
8.5.6.2 ReqSeq Sequence error 145
8.5.6.3 Invalid frame 145
8.6 Enhanced Retransmission Mode 145
8.6.1 Function Of PDU Types 146
8.6.1.1 Receiver Ready (RR) 146
8.6.1.2 Reject (REJ) 146
8.6.1.3 Receiver Not Ready (RNR) 146
8.6.1.4 Selective Reject (SREJ) 147
8.6.1.5 Functions of the Poll (P) and Final (F) bits. 147
8.6.2 Rules For Timers 147
8.6.2.1 Timer Rules for BR/EDR Controller 148
8.6.2.2 Timer Rules for AMP Controllers 148
8.6.2.3 Timer Values used After a Move Operation 149
8.6.3 General Rules for the State Machine 150
8.6.4 State Diagram 151
8.6.5 States Tables 152
8.6.5.1 State Machines 152
8.6.5.2 States 152
8.6.5.3 Variables and Timers 153
8.6.5.4 Events 155
8.6.5.5 Conditions 156
8.6.5.6 Actions 158
8.6.5.7 XMIT State Table 164
8.6.5.8 WAIT_F State Table 164
8.6.5.9 RECV State Table 166
8.6.5.10 REJ_SENT State Table 168
8.6.5.11 SREJ_SENT State Table 172
8.7 Streaming Mode 175
8.7.1 Transmitting I-frames 176
8.7.2 Receiving I-frames 176
8.7.3 Exception Conditions 176

8.7.3.1 TxSeq Sequence error....176

9 Procedure for AMP Channel Creation and Handling....177

9.1 Create Channel....177

9.2 Move Channel....180

9.2.1 Move Channel Protocol Procedure with Enhanced Retransmission Mode....181

9.2.1.1 Enhanced Retransmission Mode Procedures During A Move Operation....183

9.2.2 Move Channel Protocol Procedure with Streaming Mode (Initiator is Data Source)....184

9.2.3 Move Channel Protocol Procedure with Streaming Mode (Initiator is Data Sink)....185

9.3 Disconnect Channel....188

10 List of Figures....189

11 List of Tables....191

1 INTRODUCTION

This section of the Bluetooth Specification defines the Logical Link Control and Adaptation Layer Protocol, referred to as L2CAP. L2CAP provides connection-oriented and connectionless data services to upper layer protocols with protocol multiplexing capability and segmentation and reassembly operation. L2CAP permits higher level protocols and applications to transmit and receive upper layer data packets (L2CAP Service Data Units, SDU) up to 64 kilobytes in length. L2CAP also permits per-channel flow control and retransmission.

The L2CAP layer provides logical channels, named L2CAP channels, which are multiplexed over one or more logical links.

1.1 L2CAP FEATURES

The functional requirements for L2CAP include protocol/channel multiplexing, segmentation and reassembly (SAR), per-channel flow control, and error control. L2CAP sits above a lower layer composed of a BR/EDR Controller and zero or more AMP Controllers. It interfaces with upper layer protocols.

Figure 1.1 on page 27 breaks down L2CAP into its architectural components. The Channel Manager provides the control plane functionality and is responsible for all internal signaling, L2CAP peer-to-peer signaling and signaling with higher and lower layers. It performs the state machine functionality described in Section 6 on page 91 and uses message formats described in Section 4 on page 50, and Section 5 on page 72. The Retransmission and Flow Control block provides per-channel flow control and error recovery using packet retransmission. The Resource Manager is responsible for providing a frame relay service to the Channel Manager, the Retransmission and Flow Control block and those application data streams that do not require Retransmission and Flow Control services. It is responsible for coordinating the transmission and reception of packets related to multiple L2CAP channels over the facilities offered at the lower layer interface.

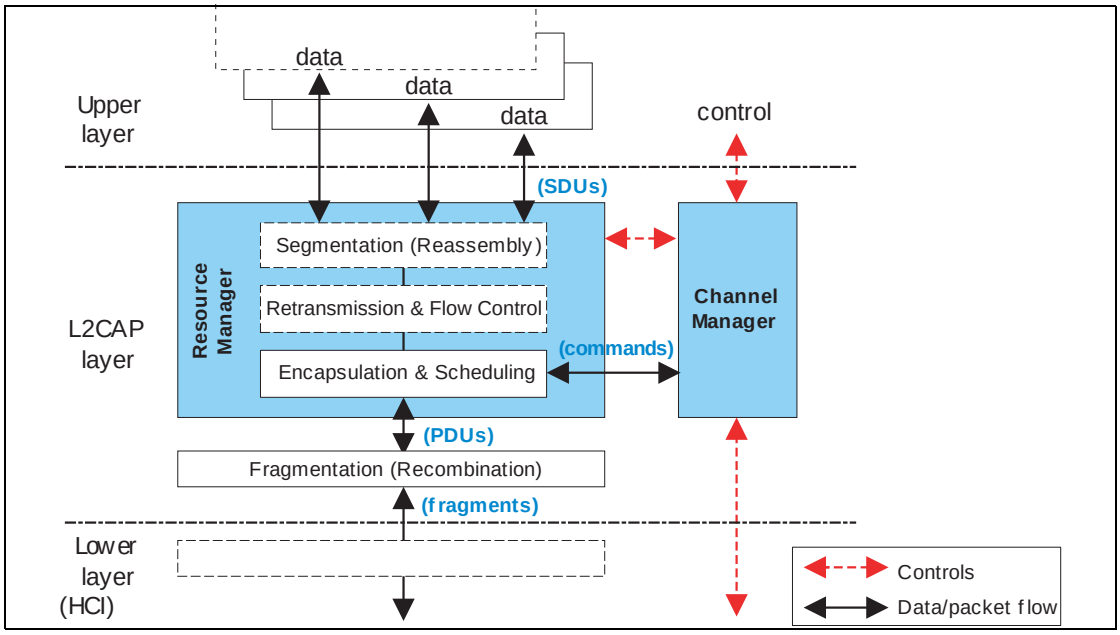

Figure 1.1: L2CAP architectural blocks

- *Protocol/channel multiplexing*

  L2CAP supports multiplexing over individual Controllers and across multiple controllers. An L2CAP channel shall operate over one Controller at a time.

  During channel setup, protocol multiplexing capability is used to route the connection to the correct upper layer protocol.

  For data transfer, logical channel multiplexing is needed to distinguish between multiple upper layer entities. There may be more than one upper layer entity using the same protocol.

- *Segmentation and reassembly*

  With the frame relay service offered by the Resource Manager, the length of transport frames is controlled by the individual applications running over L2CAP. Many multiplexed applications are better served if L2CAP has control over the PDU length. This provides the following benefits:

  a) Segmentation will allow the interleaving of application data units in order to satisfy latency requirements.

  b) Memory and buffer management is easier when L2CAP controls the packet size.

  c) Error correction by retransmission can be made more efficient.

  d) The amount of data that is destroyed when an L2CAP PDU is corrupted or lost can be made smaller than the application's data unit.

  e) The application is decoupled from the segmentation required to map the application packets into the lower layer packets.

- *Flow control per L2CAP channel*

Controllers provide error and flow control for data going over the air and HCI flow control exists for data going over an HCI transport. When several data streams run over the same Controller using separate L2CAP channels, each channel requires individual flow control. A window based flow control scheme is provided.

- *Error control and retransmissions*

  When L2CAP channels are moved from one Controller to another data can be lost. Also, some applications require a residual error rate much smaller than some Controllers can deliver. L2CAP provides error checks and retransmissions of L2CAP PDUs. The error checking in L2CAP protects against errors due to Controllers falsely accepting packets that contain errors but pass Controller-based integrity checks. L2CAP error checking and retransmission also protect against loss of packets due to flushing by the Controller. The error control works in conjunction with flow control in the sense that the flow control mechanism will throttle retransmissions as well as first transmissions.

- Support for Streaming

  Streaming applications such as audio set up an L2CAP channel with an agreed-upon data rate and do not want flow control mechanisms, including those in the Controller , to alter the flow of data. A flush timeout is used to keep data flowing on the transmit side. Streaming mode is used to stop HCI and Controller based flow control from being applied on the receiving side.

- *Fragmentation and Recombination*

  Some Controllers may have limited transmission capabilities and may require fragment sizes different from those created by L2CAP segmentation. Therefore layers below L2CAP may further fragment and recombine L2CAP PDUs to create fragments which fit each layer's capabilities. During transmission of an L2CAP PDU, many different levels of fragmentation and recombination may occur in both peer devices.

  The HCI driver or controller may fragment L2CAP PDUs to honor packet size constraints of a host controller interface transport scheme. This results in HCI data packet payloads carrying start and continuation fragments of the L2CAP PDU. Similarly the Controller may fragment L2CAP PDUs to map them into Controller packets. This may result in Controller packet payloads carrying start and continuation fragments of the L2CAP PDU.

  Each layer of the protocol stack may pass on different sized fragments of L2CAP PDUs, and the size of fragments created by a layer may be different in each peer device. However the PDU is fragmented within the stack, the receiving L2CAP entity still recombines the fragments to obtain the original L2CAP PDU.

- *Quality of Service*

  The L2CAP connection establishment process allows the exchange of information regarding the quality of service (QoS) expected between two Bluetooth devices. Each L2CAP implementation monitors the resources used by the protocol and ensures that QoS contracts are honored.

For a BR/EDR Controller, L2CAP may support both isochronous (Guaranteed) and asynchronous (Best Effort) data flows over the same ACL logical link by marking packets as automatically-flushable or non-automatically-flushable by setting the appropriate value for the Packet_Boundary_Flag in the HCI ACL Data Packet (see [vol.2, part E] Section 5.4.2 on page 414). Automatically-flushable L2CAP packets are flushed according to the automatic flush timeout set for the ACL logical link on which the L2CAP channels are mapped (see [vol.2, part E] Section 6.18 on page 427). Non-automatically-flushable L2CAP packets are not affected by the automatic flush timeout and will not be flushed. All L2CAP packets can be flushed by using the HCI Flush command (see [vol.2, part E] Section 7.3.4 on page 534).

For AMP Controllers, L2CAP places all asynchronous data flows going to the same remote device over a single logical link (aggregation). L2CAP places each isochronous data flow over its own logical link.

1.2 ASSUMPTIONS

The protocol is designed based on the following assumptions:

1. Controllers provide orderly delivery of data packets, although there might be individual packet corruption and duplicates. For the BR/EDR Controller, no more than 1 unicast ACL logical transport exists between any two devices. For a given AMP Controller, no more than one physical link exists between any two devices.
2. Controllers always provide the impression of full-duplex communication channels. This does not imply that all L2CAP communications are bi-directional. Unidirectional traffic does not require duplex channels.
3. The L2CAP layer provides a channel with a degree of reliability based on the mechanisms available in Controllers and with additional packet segmentation, error detection, and retransmission that can be enabled in the enhanced L2CAP layer. Some Controllers perform data integrity checks and resend data until it has been successfully acknowledged or a timeout occurs. Other Controllers will resend data up to a certain number of times whereupon the data is flushed. Because acknowledgements may be lost, timeouts may occur even after the data has been successfully sent. Note that the use of baseband broadcast packets in a BR/EDR Controller is prohibited if reliability is required, since all broadcasts start the first segment of an L2CAP packet with the same sequence bit.
4. Controllers provide error and flow control for data going over the air and HCI flow control exists for data going over an HCI transport but some applications will want better error control than some controllers provide. Also, moving channels between Controllers requires L2CAP flow and error control. The Flow and Error Control block provides four modes. Enhanced Retransmission mode and Retransmission Mode offer segmentation, flow control and L2CAP PDU retransmissions. Flow control mode offers just the seg-

mentation and flow control functions. Streaming mode offers segmentation and receiver side packet flushing.

1.3 SCOPE

The following features are outside the scope of L2CAP's responsibilities:

- L2CAP does not transport synchronous data designated for SCO or eSCO logical transports.
- L2CAP does not support a reliable broadcast channel. See Section 3.2 on page 41.

1.4 TERMINOLOGY

The following formal definitions apply:

Term	Description
Upper layer	The system layer above the L2CAP layer, which exchanges data with L2CAP in the form of SDUs. The upper layer may be represented by an application or higher protocol entity known as the Service Level Protocol. The interface of the L2CAP layer with the upper layer is not specified.
Lower layer	The system layer below the L2CAP layer, which exchanges data with the L2CAP layer in the form of PDUs, or fragments of PDUs. The lower layer is mainly represented within the Controller, however a Host Controller Interface (HCI) may be involved, such that an HCI host driver could also be seen as the lower layer. Except for the HCI functional specification (in case HCI is involved) the interface between L2CAP and the lower layer is not specified.
L2CAP channel	The logical connection between two endpoints in peer devices, characterized by their Channel Identifiers (CID), which is multiplexed over one or more Controller based logical links.
SDU, or L2CAP SDU	Service Data Unit: a packet of data that L2CAP exchanges with the upper layer and transports transparently over an L2CAP channel using the procedures specified here. The term SDU is associated with data originating from upper layer entities only, i.e. does not include any protocol information generated by L2CAP procedures.
Segment, or SDU segment	A part of an SDU, as resulting from the Segmentation procedure. An SDU may be split into one or more segments. Note: this term is relevant only to Enhanced Retransmission mode, Streaming mode, Retransmission Mode and Flow Control Mode, not to the Basic L2CAP Mode.

Table 1.1: Terminology

Term	Description
Segmentation	A procedure used in the L2CAP Retransmission and Flow Control Modes, resulting in an SDU being split into one or more smaller units, called Segments, as appropriate for the transport over an L2CAP channel. Note: this term is relevant only to the Enhanced Retransmission mode, Streaming mode, Retransmission Mode and Flow Control Mode, not to the Basic L2CAP Mode.
Reassembly	The reverse procedure corresponding to Segmentation, resulting in an SDU being re-established from the segments received over an L2CAP channel, for use by the upper layer. Note that the interface between the L2CAP and the upper layer is not specified; therefore, reassembly may actually occur within an upper layer entity although it is conceptually part of the L2CAP layer. Note: this term is relevant only to Enhanced Retransmission mode, Streaming mode, Retransmission Mode and Flow Control Mode, not to the Basic L2CAP Mode.
PDU, or L2CAP PDU	Protocol Data Unit a packet of data containing L2CAP protocol information fields, control information, and/or upper layer information data. A PDU is always started by a Basic L2CAP header. Types of PDUs are: B-frames, I-frames, S-frames, C-frames and G-frames.
Basic L2CAP header	Minimum L2CAP protocol information that is present in the beginning of each PDU: a length field and a field containing the Channel Identifier (CID).
Basic information frame (B-frame)	A B-frame is a PDU used in the Basic L2CAP mode for L2CAP data packets. It contains a complete SDU as its payload, encapsulated by a Basic L2CAP header.
Information frame (I-frame)	An I-frame is a PDU used in Enhanced Retransmission Mode, Streaming mode, Retransmission mode, and Flow Control Mode. It contains an SDU segment and additional protocol information, encapsulated by a Basic L2CAP header
Supervisory frame (S-frame)	An S-frame is a PDU used in Enhanced Retransmission Mode Retransmission mode, and Flow Control Mode. It contains protocol information only, encapsulated by a Basic L2CAP header, and no SDU data.
Control frame (C-frame)	A C-frame is a PDU that contains L2CAP signaling messages exchanged between the peer L2CAP entities. C-frames are exclusively used on the L2CAP signaling channel.
Group frame (G-frame)	A G-frame is a PDU exclusively used on the Connectionless L2CAP channel. It is encapsulated by a Basic L2CAP header and contains the PSM followed by the completed SDU. G-frames may be used to broadcast data to multiple slaves (either to all slaves via Piconet Broadcast or to only active slaves via Active Broadcast) or to send unicast data to a single remote device.

Table 1.1: Terminology

Term	Description
Fragment	A part of a PDU, as resulting from a fragmentation operation. Fragments are used only in the delivery of data to and from the lower layer. They are not used for peer-to-peer transportation. A fragment may be a Start or Continuation Fragment with respect to the L2CAP PDU. A fragment does not contain any protocol information beyond the PDU; the distinction of start and continuation fragments is transported by lower layer protocol provisions. Note: Start Fragments always begin with the Basic L2CAP header of a PDU.
Fragmentation	A procedure used to split L2CAP PDUs to smaller parts, named fragments, appropriate for delivery to the lower layer transport. Although described within the L2CAP layer, fragmentation may actually occur in an HCI host driver, and/or in a Controller, to accommodate the L2CAP PDU transport to HCI data packet or Controller packet sizes. Fragmentation of PDUs may be applied in all L2CAP modes. Note: in version 1.1, Fragmentation and Recombination was referred to as “Segmentation and Reassembly“.
Recombination	The reverse procedure corresponding to fragmentation, resulting in an L2CAP PDU re-established from fragments. In the receive path, full or partial recombination operations may occur in the Controller and/or the Host, and the location of recombination does not necessarily correspond to where fragmentations occurs on the transmit side.
Maximum Transmission Unit (MTU)	The maximum size of payload data, in octets, that the upper layer entity is capable of accepting, i.e. the MTU corresponds to the maximum SDU size.
Maximum PDU payload Size (MPS)	The maximum size of payload data in octets that the L2CAP layer entity is capable of accepting, i.e. the MPS corresponds to the maximum PDU payload size. Note: in the absence of segmentation, or in the Basic L2CAP Mode, the Maximum Transmission Unit is the equivalent to the Maximum PDU payload Size and shall be made equal in the configuration parameters.
Signaling MTU (MTU_{sig})	The maximum size of command information that the L2CAP layer entity is capable of accepting. The MTU_{sig}, refers to the signaling channel only and corresponds to the maximum size of a C-frame, excluding the Basic L2CAP header. The MTU_{sig} value of a peer is discovered when a C-frame that is too large is rejected by the peer.
Connectionless MTU (MTU_{cnl})	The maximum size of the connection packet information that the L2CAP layer entity is capable of accepting. The MTU_{cnl} refers to the connectionless channel only and corresponds to the maximum G-frame, excluding the Basic L2CAP header and the PSM which immediately follows it. The MTU_{cnl} of a peer can be discovered by sending an Information Request.

Table 1.1: Terminology

Term	Description
MaxTransmit	In Enhanced Retransmission mode and Retransmission mode, MaxTransmit controls the number of transmissions of a PDU that L2CAP is allowed to try before assuming that the PDU (and the link) is lost. The minimum value is 1 (only 1 transmission permitted). In Enhanced Retransmission mode a value 0 means infinite transmissions. Note: Setting MaxTransmit to 1 prohibits PDU retransmissions. Failure of a single PDU will cause the link to drop. By comparison, in Flow Control mode, failure of a single PDU will not necessarily cause the link to drop.

Table 1.1: Terminology

2 GENERAL OPERATION

L2CAP is based around the concept of *'channels'*. Each one of the endpoints of an L2CAP channel is referred to by a *channel identifier (CID).*

2.1 CHANNEL IDENTIFIERS

A channel identifier (CID) is the local name representing a logical channel endpoint on the device. The null identifier (0x0000) is an illegal identifier and shall never be used as a destination endpoint. Identifiers from 0x0001 to 0x003F are reserved for specific L2CAP functions. These channels are referred to as Fixed Channels. The L2CAP signaling channel (see Table 2.1) shall be supported. Other fixed channels may be supported. The Information Request / Response mechanism (described in Section 4.10 and Section 4.11) shall be used to determine which fixed channels a remote device supports.

The characteristics of each fixed channel are defined on a per channel basis. Fixed channel characteristics include configuration parameters (e.g., reliability, MTU size, QoS), security, and the ability to change parameters using the L2CAP configuration mechanism. Table 2.1 lists the defined fixed channels and provides a reference to where the associated channel characteristics are defined. Fixed channels are available as soon as a BR/EDR ACL logical transport is set up. All initialization that is normally performed when a channel is created shall be performed for each of the supported fixed channels when the BR/EDR ACL logical transport is set up. Fixed channels shall only run over BR/EDR links and shall not be moved.

Implementations are free to manage the remaining CIDs in a manner best suited for that particular implementation, with the provision that two simultaneously active L2CAP channels shall not share the same CID. Table 2.1 summarizes the definition and partitioning of the CID name space.

CID assignment is relative to a particular device and a device can assign CIDs independently from other devices (unless it needs to use any of the reserved CIDs shown in the table below). Thus, even if the same CID value has been assigned to (remote) channel endpoints by several remote devices connected to a single local device, the local device can still uniquely associate each remote CID with a different device.

CID	Description	Channel Characteristics
0x0000	Null identifier	Not allowed
0x0001	L2CAP Signaling channel	See Section 4 on page 50
0x0002	Connectionless channel	See Section 7.6 on page 124

Table 2.1: CID name space

0x0003	AMP Manager Protocol	See [Part E] Section 2.2 on page 368.
0x0004-0x003E	Reserved	Not applicable
0x003F	AMP Test Manager	See Part D, Section 1.2.3
0x0040-0xFFFF	Dynamically allocated	Negotiated using L2CAP configuration mechanism (see Section 7.1 on page 113.

Table 2.1: CID name space

2.2 OPERATION BETWEEN DEVICES

Figure 2.1 on page 36 illustrates the use of CIDs in a communication between corresponding peer L2CAP entities in separate devices. The connection-oriented data channels represent a connection between two devices, where a CID identifies each endpoint of the channel. When used for broadcast transmissions, the connectionless channel restricts data flow to a single direction. The connectionless channel may be used to transmit data to all slaves in a piconet (utilizing Piconet Broadcast which includes both active and parked slaves) or to all active slaves (using Active Broadcast which includes only active slaves). When used for unicast transmissions the connectionless channel may be used in either direction between a master and a slave.

There are also a number of CIDs reserved for special purposes. The signaling channel is one example of a reserved channel. This channel is used to create and establish connection-oriented data channels and to negotiate changes in the characteristics of connection oriented and the connectionless channel. Support for a signaling channel within an L2CAP entity is mandatory.

The L2CAP signaling channel and all supported fixed channels are available immediately when an ACL logical transport is established between two devices. Another CID (0x0002) is reserved for all incoming and outgoing connectionless data traffic, whether broadcast or unicast. Connectionless data traffic may flow immediately once an ACL logical transport is established between two devices and once the transmitting device has determined that the remote device supports connectionless traffic.

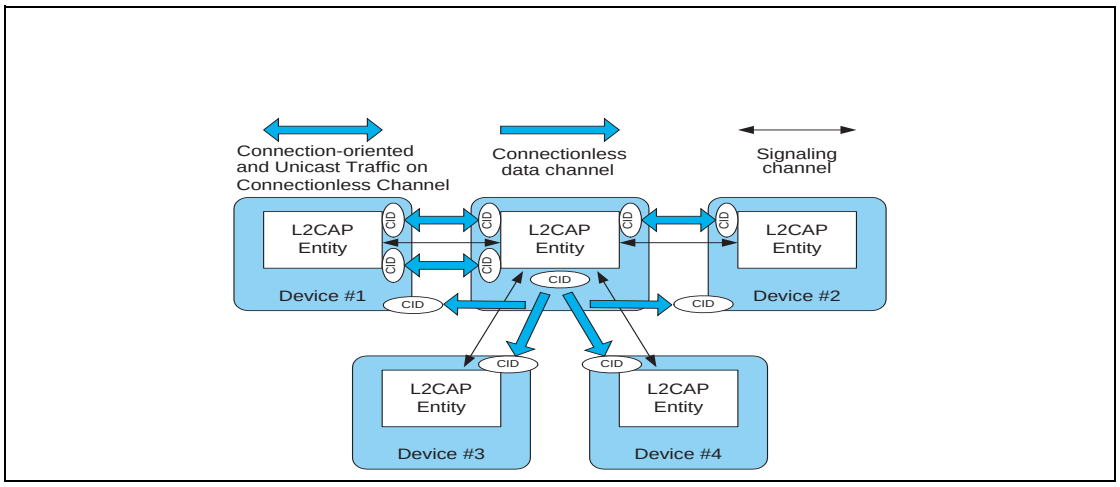

Figure 2.1: Channels between devices

Table 2.2 describes the various channels and their source and destination identifiers. A CID is allocated to identify the local endpoint and shall be in the range 0x0040 to 0xFFFF. Section 6 on page 91 describes the state machine associated with each connection-oriented channel. Section 3.1 on page 40 and Section 3.3 on page 41 describe the packet format associated with connection-oriented channels. Section 3.2 on page 41 describes the packet format associated with the connectionlesschannel.

Channel Type	Local CID (sending)	Remote CID (receiving)
Connection-oriented	Dynamically allocated	Dynamically allocated
Connectionless data	0x0002 (fixed)	0x0002 (fixed)
L2CAP Signaling	0x0001 (fixed)	0x0001 (fixed)

Table 2.2: Types of Channel Identifiers

2.3 OPERATION BETWEEN LAYERS

L2CAP implementations should follow the general architecture described below. L2CAP implementations transfer data between upper layer protocols and the lower layer protocol. This document lists a number of services that should be exported by any L2CAP implementation. Each implementation shall also support a set of signaling commands for use between L2CAP implementations. L2CAP implementations should also be prepared to accept certain types of events from lower layers and generate events to upper layers. How these events are passed between layers is implementation specific.

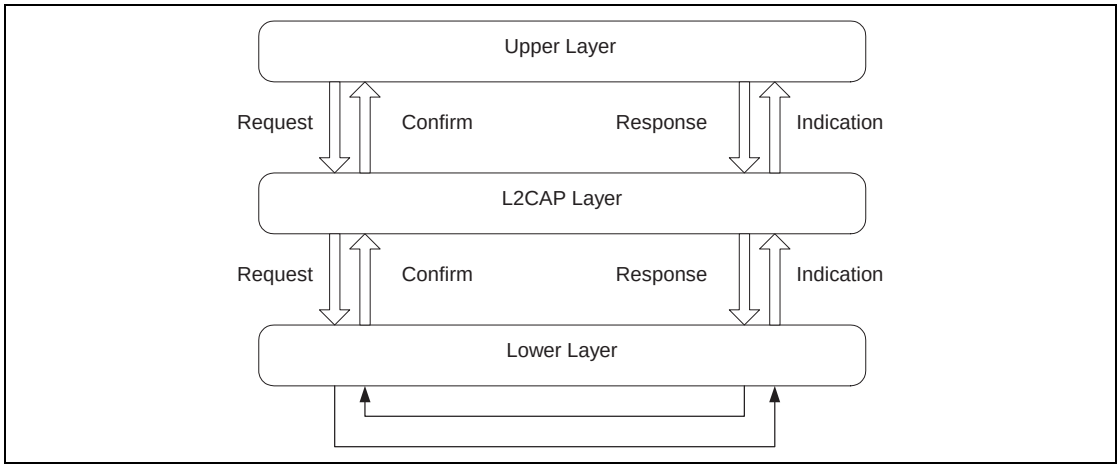

Figure 2.2: L2CAP transaction model

2.4 MODES OF OPERATION

L2CAP may operate in one of five different modes as selected for each L2CAP channel.

The modes are:

- Basic L2CAP Mode (equivalent to L2CAP specification in Bluetooth v1.1) [1]
- Flow Control Mode
- Retransmission Mode
- Enhanced Retransmission Mode
- Streaming Mode

The modes are enabled using the configuration procedure described in Section 7.1. The Basic L2CAP Mode shall be the default mode, which is used when no other mode is agreed. Enhanced Retransmission mode shall be used for all reliable channels created over AMP links and for BR/EDR links operating as described in Section 7.10. Enhanced Retransmission mode should be enabled for reliable channels created over BR/EDR links not operating as described in Section 7.10. Streaming mode shall be used for streaming applications created over AMP links and BR/EDR links operating as described in Section 7.10. Streaming mode should be enabled for streaming applications created over BR/EDR links not operating as described in Section 7.10. Either Enhanced Retransmission mode or Streaming mode should be enabled when supported by both L2CAP entities. Flow Control Mode and Retransmission mode shall only be enabled when communicating with L2CAP entities that do not support either Enhanced Retransmission mode or Streaming mode.

1. Specification of the Bluetooth System v1.1 (Feb 22nd 2001): volume 1, part D.

In Flow Control mode, Retransmission mode, and Enhanced Retransmission mode, PDUs exchanged with a peer entity are numbered and acknowledged. The sequence numbers in the PDUs are used to control buffering, and a TxWindow size is used to limit the required buffer space and/or provide a method for flow control.

In Flow Control Mode no retransmissions take place, but missing PDUs are detected and can be reported as lost.

In Retransmission Mode a timer is used to ensure that all PDUs are delivered to the peer, by retransmitting PDUs as needed. A go-back-n repeat mechanism is used to simplify the protocol and limit the buffering requirements.

Enhanced Retransmission mode is similar to Retransmission mode. It adds the ability to set a POLL bit to solicit a response from a remote L2CAP entity, adds the SREJ S-frame to improve the efficiency of error recovery and adds an RNR S-frame to replace the R-bit for reporting a local busy condition.

Streaming mode is for real-time isochronous traffic. PDUs are numbered but are not acknowledged. A finite flush timeout is set on the sending side to flush packets that are not sent in a timely manner. On the receiving side if the receive buffers are full when a new PDU is received then a previously received PDU is overwritten by the newly received PDU. Missing PDUs can be detected and reported as lost. TxWindow size is not used in Streaming mode.

Note: Although L2CAP Basic mode may be used for L2CAP channels operating over the BR/EDR Controller, only L2CAP channels which have been configured to use Enhanced Retransmission mode or Streaming mode may be moved to operate over an AMP Controller (see Section 4.16).

L2CAP channels used for multiplexing layers such as RFCOMM can serve a variety of higher layer protocols. In cases where the local device and remote device have mutual support for an AMP and complementary support for profiles on a multiplexing layer which requires reliability (e.g. RFCOMM), the multiplexing layer should be configured to use Enhanced Retransmission mode to ensure that profiles utilizing the multiplexer are not prevented from being moved to the AMP Controller. Similarly, in cases where the local device and remote device have mutual support for an AMP and complementary support for profiles on a multiplexing layer which does not require reliability, the multiplexing layer should be configured to use Streaming mode to ensure that profiles utilizing the multiplexer are not prevented from being moved to the AMP Controller.

Care should be taken in selecting the parameters used for Enhanced Retransmission mode and Streaming mode when they are used beneath legacy profile implementations to ensure that performance is not negatively impacted relative to the performance achieved when using the same profile with Basic mode on a BR/EDR link. When there can never be a mutually supported AMP, nor complementary support for a profile which would benefit from AMP, it may be pref-

erable to configure Basic mode to minimize the risk of negative performance impacts.

2.5 MAPPING CHANNELS TO LOGICAL LINKS

L2CAP maps channels to Controller logical links, which in turn run over Controller physical links. All logical links going between a local Controller and remote Controller run over a single physical link. BR/EDR Controllers have one logical link (ACL logical link) per physical link while AMP Controllers may have multiple logical links per physical link.

For BR/EDR Controllers, all Best Effort and Guaranteed channels going between two devices shall be mapped to a single logical link. For AMP Controllers, all Best Effort channels going between two Controllers shall be mapped to a single logical link while each Guaranteed channel going between two Controllers shall be mapped to its own logical link—one logical link per Guaranteed channel.

When a Guaranteed channel is created or moved to a Controller, a corresponding Guaranteed logical link shall be created to carry the channel traffic. Creation of a Guaranteed logical link involves admission control. Admission control is verifying that the guarantee can be achieved without compromising existing guarantees. For an AMP Controller, L2CAP shall tell the controller to create a Guaranteed logical link and admission control shall be performed by the Controller. For a BR/EDR Controller, admission control (creation of a Guaranteed logical link) shall be performed by the L2CAP layer.

3 DATA PACKET FORMAT

L2CAP is packet-based but follows a communication model based on *channels*. A channel represents a data flow between L2CAP entities in remote devices. Channels may be connection-oriented or connectionless.
All packet fields shall use Little Endian byte order.

3.1 CONNECTION-ORIENTED CHANNEL IN BASIC L2CAP MODE

Figure 3.1 on page 40 illustrates the format of the L2CAP PDU within a connection-oriented channel. In basic L2CAP mode, the L2CAP PDU on a connection-oriented channel is also referred to as a "B-frame".

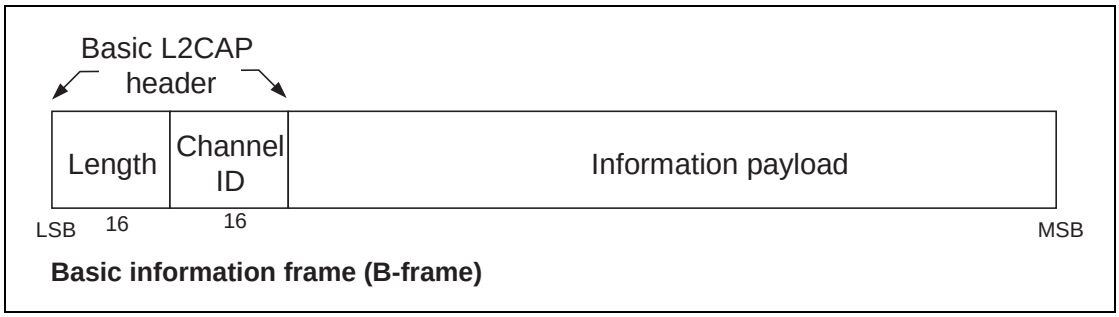

Figure 3.1: L2CAP PDU format in Basic L2CAP mode on connection-oriented channels (field sizes in bits)

The fields shown are:

- *Length: 2 octets (16 bits)*

  Length indicates the size of the information payload in octets, excluding the length of the L2CAP header. The length of an information payload can be up to 65535 octets. The Length field is used for recombination and serves as a simple integrity check of the recombined L2CAP packet on the receiving end.

- *Channel ID: 2 octets*

  The channel ID (CID) identifies the destination channel endpoint of the packet.

- *Information payload: 0 to 65535 octets*

  This contains the payload received from the upper layer protocol (outgoing packet), or delivered to the upper layer protocol (incoming packet). The MTU is determined during channel configuration (see Section 5.1 on page 72). The minimum supported MTU for the signaling PDUs (MTU_{sig}) is 48 octets (see Section 4 on page 50).

3.2 CONNECTIONLESS DATA CHANNEL IN BASIC L2CAP MODE

Figure 3.2 illustrates the L2CAP PDU format within a connectionless data channel. Here, the L2CAP PDU is also referred to as a "G-frame".

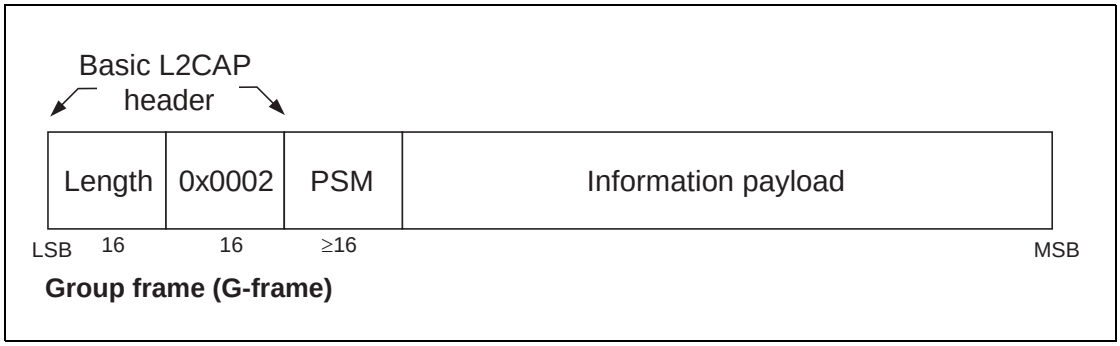

Figure 3.2: L2CAP PDU format on the Connectionless channel

The fields shown are:

- *Length: 2 octets*

  Length indicates the size of information payload plus the PSM field in octets.

- *Channel ID: 2 octets*

  Channel ID (0x0002) reserved for connectionless traffic.

- *Protocol/Service Multiplexer (PSM): 2 octets (minimum)*

  For information on the PSM field see Section 4.2 on page 53.

- *Information payload: 0 to 65533 octets*

  This parameter contains the payload information to be distributed to all slaves in the piconet for broadcast connectionless traffic, or to a specific remote device for data sent via the L2CAP connectionless channel. Implementations shall support a connectionless MTU (MTU_{cnl}) of 48 octets on the connectionless channel. Devices may also explicitly change to a larger or smaller connectionless MTU (MTU_{cnl}).

  Note: the maximum size of the Information payload field decreases accordingly if the PSM field is extended beyond the two octet minimum.

3.3 CONNECTION-ORIENTED CHANNEL IN RETRANSMISSION/FLOW CONTROL/STREAMING MODES

To support flow control, retransmissions, and streaming, L2CAP PDU types with protocol elements in addition to the Basic L2CAP header are defined. The information frames (I-frames) are used for information transfer between L2CAP entities. The supervisory frames (S-frames) are used to acknowledge I-frames and request retransmission of I-frames.

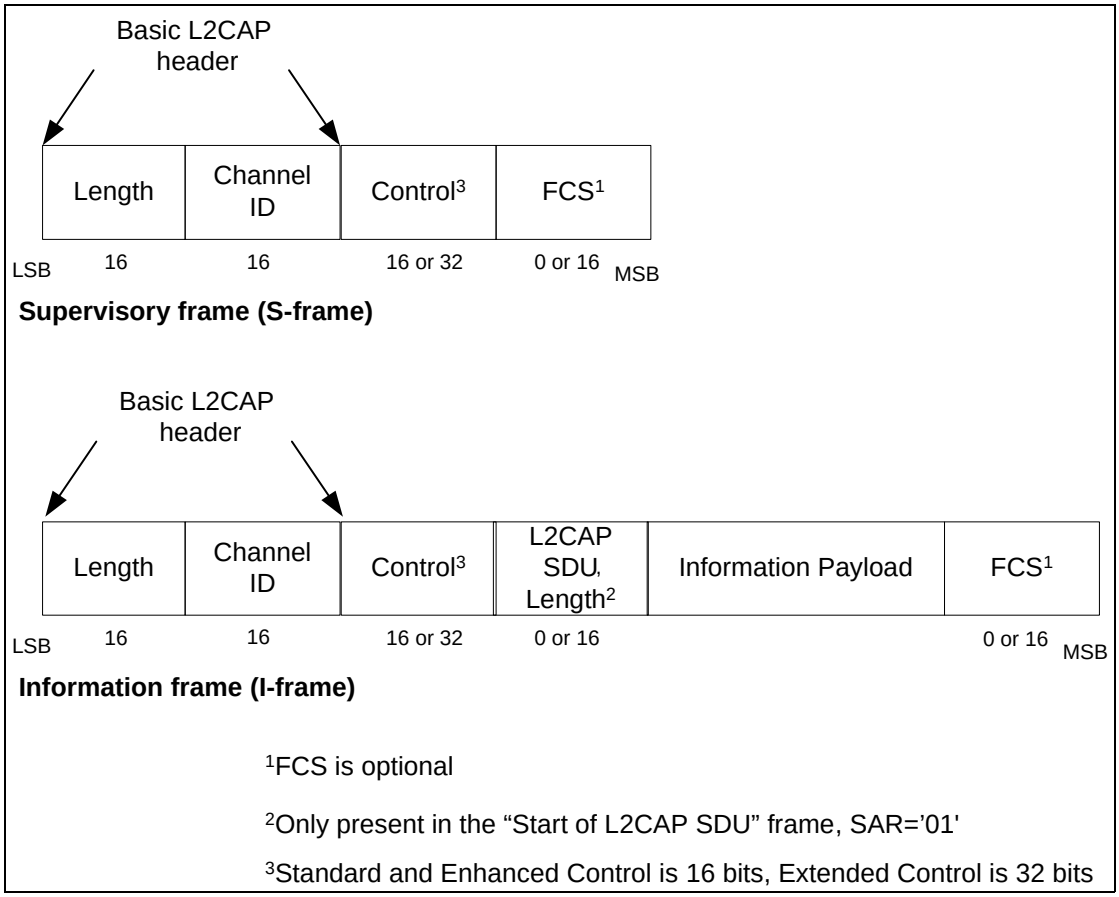

Figure 3.3: L2CAP PDU formats in Flow Control and Retransmission Modes

3.3.1 L2CAP header fields

- *Length: 2 octets*

  The first two octets in the L2CAP PDU contain the length of the entire L2CAP PDU in octets, excluding the Length and CID field.

  For I-frames and S-frames, the Length field therefore includes the octet lengths of the Control, L2CAP SDU Length (when present), Information octets and frame check sequence (FCS) (when present) fields.

  The maximum number of Information octets in one I-frame is based on which fields are present and the type of the Control Field. The maximum number of Information octets in an I-frame with a Standard Control field is as follows:

L2CAP SDU Length present and FCS present	65529 octets
L2CAP SDU Length present and FCS not present	65531 octets
L2CAP SDU Length not present and FCS present	65531 octets
L2CAP SDU Length not present and FCS not present	65533 octets

The maximum number of Information octets in an I-frame with an Extended Control field is as follows:

L2CAP SDU Length present and FCS present	65527 octets

L2CAP SDU Length present and FCS not present	65529 octets
L2CAP SDU Length not present and FCS present	65529 octets
L2CAP SDU Length not present and FCS not present	65531 octets

- *Channel ID: 2 octets*

  This field contains the Channel Identification (CID).

3.3.2 Control field (2 or 4 octets)

The Control Field identifies the type of frame. There are three different Control Field formats: the Standard Control Field, the Enhanced Control Field, and the Extended Control Field. The Standard Control Field shall be used for Retransmission mode and Flow Control mode. The Enhanced Control Field shall be used for Enhanced Retransmission mode and Streaming mode.The Extended Control Field may be used for Enhanced Retransmission mode and Streaming mode. The Control Field will contain sequence numbers where applicable. Its coding is shown in Table 3.1 on page 44, Table 3.2 on page 45, and Table 3.3 on page 45. There are two different frame types, Information frame types and Supervisory frame types. Information and Supervisory frames types are distinguished by the least significant bit in the Control Field, as shown in Table 3.1, Table 3.2 on page 45, and Table 3.3 on page 45.

- *Information frame format (I-frame)*

  The I-frames are used to transfer information between L2CAP entities. Each I-frame has a TxSeq(Send sequence number), ReqSeq(Receive sequence number) which may or may not acknowledge additional I-frames received by the data link layer entity. Each I-frame with a Standard Control field has a retransmission bit (R bit) that affects whether I-frames are retransmitted. Each I-frame with an Enhanced Control Field or an Extended Control Field has an F-bit that is used in Poll/Final bit functions.

  The SAR field in the I-frame is used for segmentation and reassembly control. The L2CAP SDU Length field specifies the length of an SDU, including the aggregate length across all segments if segmented.

- *Supervisory frame format (S-frame)*

  S-frames are used to acknowledge I-frames and request retransmission of I-frames. Each S-frame has an ReqSeq sequence number which may acknowledge additional I-frames received by the data link layer entity. Each S-frame with a Standard Control Field has a retransmission bit (R bit) that affects whether I-frames are retransmitted. Each S-frame with an Enhanced Control field or an Extended Control Field has a Poll bit (P-bit) and a Final bit (F-bit) and does not have an R-bit.

  Defined types of S-frames are RR (Receiver Ready), REJ (Reject), RNR (Receiver Not Ready) and SREJ (Selective Reject).

Frame type	**16**	**15**	**14**	**13**	**12**	**11**	**10**	**9**	**8**	**7**	**6**	**5**	**4**	**3**	**2**	**1**
I	SAR		ReqSeq						R	TxSeq						0
S	X	X	ReqSeq						R	X	X	X	S		0	1

X denotes reserved bits, which shall be set to 0.

Table 3.1: Standard Control Field formats

Frame type	16	15	14	13	12	11	10	9	8	7	6	5	4	3	2	1
I	SAR		ReqSeq						F	TxSeq						0
S	X	X	ReqSeq						F	X	X	P	S		0	1

X denotes reserved bits, which shall be set to 0.

Table 3.2: Enhanced Control Field formats

Frame type	16	15	14	13	12	11	10	9	8	7	6	5	4	3	2	1
I	ReqSeq														F	0
	TxSeq														SAR	
S	ReqSeq														F	1
									X	X	X	X	X	P	S	

X denotes reserved bits, which shall be set to 0.

Table 3.3: Extended Control Field formats

- *Send Sequence Number - TxSeq (6 bits or 14 bits)*

  The send sequence number is used to number each I-frame, to enable sequencing and retransmission.

- *Receive Sequence Number - ReqSeq (6 bits or 14 bits)*

  The receive sequence number is used by the receiver side to acknowledge I-frames, and in the REJ and SREJ frames to request the retransmission of an I-frame with a specific send sequence number.

- *Retransmission Disable Bit - R (1 bit)*

  The Retransmission Disable bit is used to implement Flow Control. The receiver sets the bit when its internal receive buffer is full, this happens when one or more I-frames have been received but the SDU reassembly function has not yet pulled all the frames received. When the sender receives a frame with the Retransmission Disable bit set it shall disable the RetransmissionTimer, this causes the sender to stop retransmitting I-frames.

  R=0: Normal operation. Sender uses the RetransmissionTimer to control retransmission of I-frames. Sender does not use the MonitorTimer.

  R=1: Receiver side requests sender to postpone retransmission of I-frames. Sender monitors signaling with the MonitorTimer. Sender does not use the RetransmissionTimer.

  The functions of ReqSeq and R are independent.

- *Segmentation and Reassembly - SAR (2 bits)*

The SAR bits define whether an L2CAP SDU is segmented. For segmented SDUs, the SAR bits also define which part of an SDU is in this I-frame, thus allowing one L2CAP SDU to span several I-frames.

An I-frame with SAR=”Start of L2CAP SDU” also contains a length indicator, specifying the number of information octets in the total L2CAP SDU. The encoding of the SAR bits is shown in Table 3.4.

00	Unsegmented L2CAP SDU
01	Start of L2CAP SDU
10	End of L2CAP SDU
11	Continuation of L2CAP SDU

Table 3.4: SAR control element format.

- *Supervisory function - S (2 bits)*

  The S-bits mark the type of S-frame. There are four types defined: RR (Receiver Ready), REJ (Reject) , RNR (Receiver Not Ready) and SREJ (Selective Reject). The encoding is shown in Table 3.5.

00	RR - Receiver Ready
01	REJ - Reject
10	RNR - Receiver Not Ready
11	SREJ - Select Reject

Table 3.5: S control element format: type of S-frame.

- *Poll - P (1 bit)*

  The P-bit is set to 1 to solicit a response from the receiver. The receiver shall respond immediately with a frame with the F-bit set to 1.

- *Final - F (1 bit)*

  The F-bit is set to 1 in response to an S-frame with the P bit set to 1.

3.3.3 L2CAP SDU length field (2 octets)

When a SDU spans more than one I-frame, the first I-frame in the sequence shall be identified by SAR=01=”Start of L2CAP SDU”. The L2CAP SDU Length field shall specify the total number of octets in the SDU. The L2CAP SDU Length field shall be present in I-frames with SAR=01 (Start of L2CAP SDU), and shall not be used in any other I-frames. When the SDU is unsegmented (SAR=00), L2CAP SDU Length field is not needed and shall not be present.

3.3.4 Information payload field

The information payload field consists of an integral number of octets. The maximum number of octets in this field is the same as the negotiated value of

the MPS configuration parameter. The maximum number of octets in this field is also limited by the range of the Basic L2CAP header length field. This ranges from 65533 octets for I-frames with a Standard or Enhanced Control Field, no SDU length field, and no FCS field to 65527 octets for I-frames with an Enhanced Control Field, an SDU length field, and FCS field. Thus, even if an MPS of 65533 has been negotiated, the range of the Basic L2CAP header length field will restrict the number of octets in this field. For example, when an Enhanced Control Field, an SDU length field, and FCS field are present the number of octets in this field is restricted to 65529.

3.3.5 Frame check sequence (2 octets)

The Frame Check Sequence (FCS) is 2 octets. The FCS is constructed using the generator polynomial $g(D) = D^{16} + D^{15} + D^2 + 1$ (see Figure 3.4). The 16 bit LFSR is initially loaded with the value 0x0000, as depicted in Figure 3.5. The switch S is set in position 1 while data is shifted in, LSB first for each octet. After the last bit has entered the LFSR, the switch is set in position 2, and the register contents are transmitted from right to left (i.e. starting with position 15, then position 14, etc.). The FCS covers the Basic L2CAP header, Control, L2CAP-SDU length and Information payload fields, if present, as shown in Figure 3.3 on page 42.

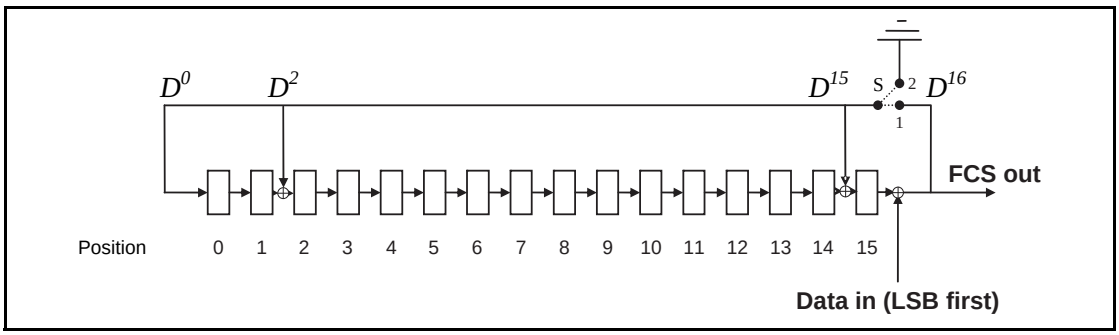

Figure 3.4: The LFSR circuit generating the FCS.

Position	0	1	2	3	4	5	6	7	8	9	10	11	12	13	14	15
LFSR	0	0	0	0	0	0	0	0	0	0	0	0	0	0	0	0

Figure 3.5: Initial state of the FCS generating circuit.

Examples of FCS calculation, $g(D) = D^{16} + D^{15} + D^2 + 1$:

1. ***I Frame***
   Length = 14
   Control = 0x0002 (SAR=0, ReqSeq=0, R=0, TxSeq=1)
   Information Payload = 00 01 02 03 04 05 06 07 08 09 (10 octets, hexadecimal notation)

==> FCS = 0x6138
==> Data to Send = 0E 00 40 00 02 00 00 01 02 03 04 05 06 07 08 09 38 61 (hexadecimal notation)

2. ***RR Frame***
   Length = 4
   Control = 0x0101 (ReqSeq=1, R=0, S=0)
   ==> FCS = 0x14D4
   ==> Data to Send = 04 00 40 00 01 01 D4 14 (hexadecimal notation)

3.3.6 Invalid frame detection

For Retransmission mode and Flow Control mode, a received PDU shall be regarded as invalid, if one of the following conditions occurs:

1. Contains an unknown CID.
2. Contains an FCS error.
3. Contains a length greater than the maximum PDU payload size (MPS).
4. I-frame that has fewer than 8 octets.
5. I-frame with SAR=01 (Start of L2CAP SDU) that has fewer than 10 octets.
6. I-frame with SAR bits that do not correspond to a normal sequence of either unsegmented or start, continuation, end for the given CID.
7. S-frame where the length field is not equal to 4.

These error conditions may be used for error reporting.

3.3.7 Invalid Frame Detection Algorithm

For Enhanced Retransmission mode and Streaming mode the following algorithm shall be used for received PDUs. It may be used for Retransmission mode and Flow Control mode:

1. Check the CID. If the PDU contains an unknown CID then it shall be ignored.
2. Check the FCS. If the PDU contains an FCS error then it shall be ignored. If the channel is configured to use "No FCS" then the PDU is considered to have a good FCS (no FCS error).

3. Check the following conditions. If one of the conditions occurs the channel shall be closed or in the case of fixed channels the ACL shall be disconnected.

   a) PDU contains a length greater than the maximum PDU payload size (MPS)

   b) I-frame that has fewer than the required number of octets. If the channel is configured to use "No FCS" then the required number of octets is 6 otherwise the required number of octets is 8.

   c) S-frame where the length field is invalid. If the channel is configured to use "No FCS" then the length field shall be 2 otherwise the length field shall be 4.

4. Check the SAR bits. The SAR check is performed after the frame has been successfully received in the correct sequence. The PDU is invalid if one of the following conditions occurs:

   a) I-frame with SAR=01 (Start of L2CAP SDU) that has fewer than the required number of octets. If the channel is configured to use a Standard or Enhanced Control field then the required number of octets is 8 if "No FCS" is configured; otherwise, the required number of octets is 10. If the channel is configured to use an Extended Control field then the required number of octets is 10 if "No FCS" is configured; otherwise, the required number of octets is 12.

   b) I-frame with SAR bits that do not correspond to a normal sequence of either unsegmented or start, continuation, end for the given CID.

   c) I-frame with SAR= 01 (Start of L2CAP SDU) where the value in the L2CAP SDU length field exceeds the configured MTU.

5. If the I-frame has been received in the correct sequence and is invalid as described in 4 then the channel shall be closed or in the case of fixed channels the ACL shall be disconnected. For Streaming mode and Flow Control mode if one or more I-frames are missing from a sequence of I-frames using SAR bits of start, continuation and end then received I-frames in the sequence may be ignored. For Flow Control mode and Streaming mode I-frames received out of sequence with SAR bits of unsegmented may be accepted.

If the algorithm is used for Retransmission mode or Flow control mode then it shall be used instead of Invalid Frame detection described in section 3.3.6.

These error conditions may be used for error reporting.

4 SIGNALING PACKET FORMATS

This section describes the signaling commands passed between two L2CAP entities on peer devices. All signaling commands are sent to the signaling channel with CID 0x0001. This signaling channel is available as soon as an ACL logical transport is set up and L2CAP traffic is enabled. Figure 4.1 on page 50 illustrates the general format of L2CAP PDUs containing signaling commands (C-frames). Multiple commands may be sent in a single C-frame. Commands take the form of Requests and Responses. All L2CAP implementations shall support the reception of C-frames with a payload length that does not exceed the signaling MTU. The minimum supported payload length for the C-frame (MTU_{sig}) is 672 octets (48 octets for L2CAP implementations not supporting the Extended Flow Specification option). L2CAP implementations should not use C-frames that exceed the MTU_{sig} of the peer device. If they ever do, the peer device shall send a Command Reject containing the supported MTU_{sig}. Implementations must be able to handle the reception of multiple commands in an L2CAP packet.

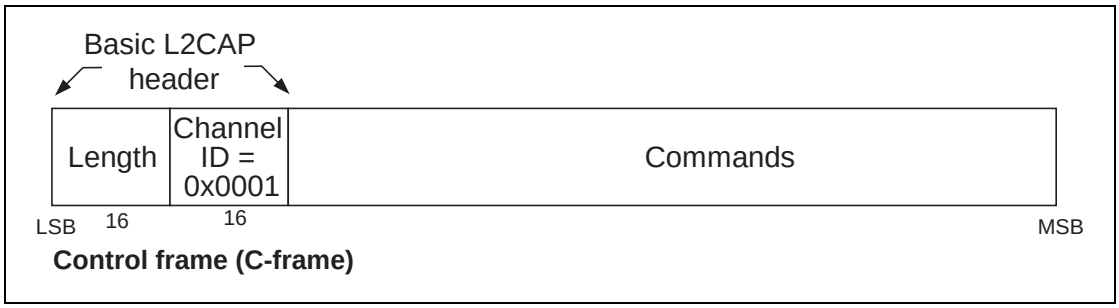

Figure 4.1: L2CAP PDU format on the signaling channel

Figure 4.2 displays the general format of all signaling commands.

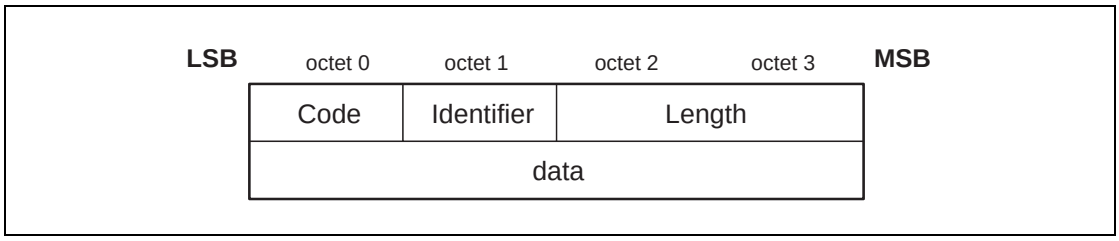

Figure 4.2: Command format

The fields shown are:

- *Code (1 octet)*

  The Code field is one octet long and identifies the type of command. When a packet is received with an unknown Code field, a Command Reject packet (defined in Section 4.1 on page 52) is sent in response.

  Table 4.1 on page 51 lists the codes defined by this document. All codes are specified with the most significant bit in the left-most position.

Code	Description
0x00	RESERVED
0x01	Command reject
0x02	Connection request
0x03	Connection response
0x04	Configure request
0x05	Configure response
0x06	Disconnection request
0x07	Disconnection response
0x08	Echo request
0x09	Echo response
0x0A	Information request
0x0B	Information response
0x0C	Create Channel request
0x0D	Create Channel response
0x0E	Move Channel request
0x0F	Move Channel response
0x10	Move Channel Confirmation
0x11	Move Channel Confirmation response

Table 4.1: Signaling Command Codes

- *Identifier (1 octet)*

  The Identifier field is one octet long and matches responses with requests. The requesting device sets this field and the responding device uses the same value in its response. Between any two devices a different Identifier shall be used for each successive command. Following the original transmission of an Identifier in a command, the Identifier may be recycled if all other Identifiers have subsequently been used.

  RTX and ERTX timers are used to determine when the remote end point is not responding to signaling requests. On the expiration of a RTX or ERTX

timer, the same identifier shall be used if a duplicate Request is re-sent as stated in Section 6.1.7 on page 103.

A device receiving a duplicate request should reply with a duplicate response. A command response with an invalid identifier is silently discarded. Signaling identifier 0x00 is an illegal identifier and shall never be used in any command.

- *Length (2 octets)*

  The Length field is two octets long and indicates the size in octets of the data field of the command only, i.e., it does not cover the Code, Identifier, and Length fields.

- *Data (0 or more octets)*

  The Data field is variable in length. The Code field determines the format of the Data field. The length field determines the length of the data field.

4.1 COMMAND REJECT (CODE 0x01)

A Command Reject packet shall be sent in response to a command packet with an unknown command code or when sending the corresponding response is inappropriate. Figure 4.3 on page 52 displays the format of the packet. The identifier shall match the identifier of the command packet being rejected. Implementations shall always send these packets in response to unidentified signaling packets. Command Reject packets should not be sent in response to an identified Response packet.

When multiple commands are included in an L2CAP packet and the packet exceeds the signaling MTU (MTU_{sig}) of the receiver, a single Command Reject packet shall be sent in response. The identifier shall match the first Request command in the L2CAP packet. If only Responses are recognized, the packet shall be silently discarded.

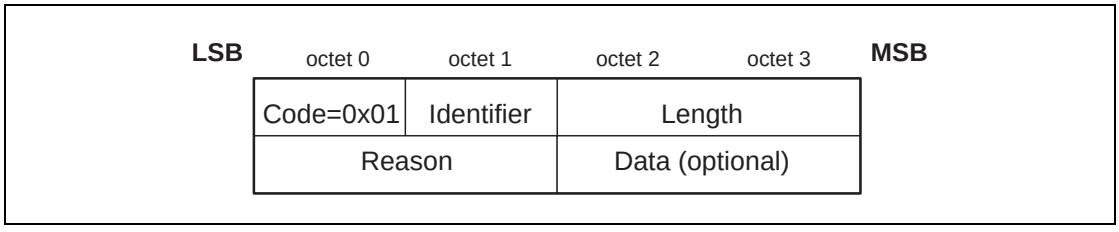

Figure 4.3: Command Reject packet

Figure 4.3 shows the format of the Command Reject packet. The data fields are:

- *Reason (2 octets)*

  The Reason field describes why the Request packet was rejected, and is set to one of the Reason codes in Table 4.2.

Reason value	Description
0x0000	Command not understood
0x0001	Signaling MTU exceeded
0x0002	Invalid CID in request
Other	Reserved

Table 4.2: Reason Code Descriptions

- *Data (0 or more octets)*

  The length and content of the Data field depends on the Reason code. If the Reason code is 0x0000, “Command not understood”, no Data field is used. If the Reason code is 0x0001, “Signaling MTU Exceeded”, the 2-octet Data field represents the maximum signaling MTU the sender of this packet can accept.

  If a command refers to an invalid channel then the Reason code 0x0002 will be returned. Typically a channel is invalid because it does not exist. The data field shall be 4 octets containing the local (first) and remote (second) channel endpoints (relative to the sender of the Command Reject) of the disputed channel. The remote endpoint is the source CID from the rejected command. The local endpoint is the destination CID from the rejected command. If the rejected command contains only one of the channel endpoints, the other one shall be replaced by the null CID 0x0000.

Reason value	Data Length	Data value
0x0000	0 octets	N/A
0x0001	2 octets	Actual MTU_{sig}
0x0002	4 octets	Requested CID

Table 4.3: Reason Data values

4.2 CONNECTION REQUEST (CODE 0x02)

Connection request packets are sent to create an L2CAP channel between two devices. The L2CAP channel shall be established before configuration begins. Figure 4.4 illustrates a Connection Request packet.

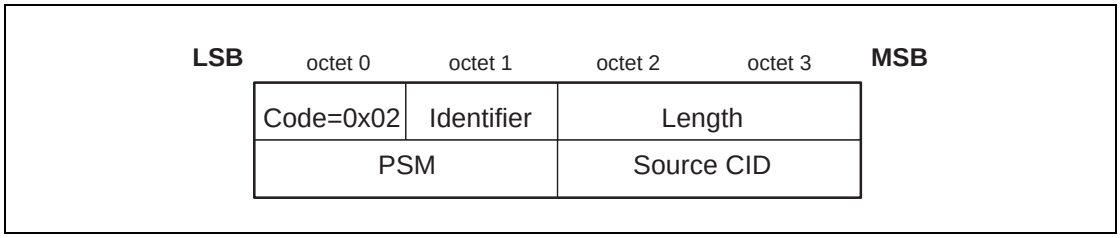

Figure 4.4: Connection Request Packet

The data fields are:

- *Protocol/Service Multiplexer - PSM (2 octets (minimum))*

  The PSM field is at least two octets in length. The structure of the PSM field is based on the ISO 3309 extension mechanism for address fields. All PSM values shall be ODD, that is, the least significant bit of the least significant octet must be ’1’. Also, all PSM values shall have the least significant bit of the most significant octet equal to ’0’. This allows the PSM field to be extended beyond 16 bits. PSM values are separated into two ranges. Valid values in the first range are assigned by the Bluetooth SIG and indicate protocols. The second range of values are dynamically allocated and used in conjunction with the Service Discovery Protocol (SDP). The dynamically assigned values may be used to support multiple implementations of a particular protocol.

  PSM values are defined in the Assigned Numbers document.

Range	Type	Server Usage	Client Usage
0x0001-0x0EFF (Note 1)	Fixed, SIG assigned	PSM is fixed for all implmentations.	PS may be obtained via SDP or may be assumed for a fixed service. Protocol used is indicated by the PSM as defined in the Assigned Numbers page.
>0x1000	Dynamic	PSM may be fixed for a given implementation or may be assigned at the time the service is registered in SDP.	PSM shall be obtained vi SDP upon every reconnection. PSM for one directin will typically be different from the other direction.

Table 4.4: PSM ranges and usage

1. PSMs shall be odd and the least significant bit of the most significant byte shall be zero, hence the following ranges do not contain valid PSMs: 0x0100-0x01FF, 0x0300-0x03FF, 0x0500-0x05FF, 0x0700-0x07FF, 0x0900-0x09FF, 0x0B00-0x0BFF, 0x0D00-0x0DFF, 0x0F00-0x0FFF. All even values are also not valid as PSMs.

- *Source CID - SCID (2 octets)*

  The source CID is two octets in length and represents a channel endpoint on the device sending the request. Once the channel has been configured, data packets flowing to the sender of the request shall be sent to this CID. Thus, the Source CID represents the channel endpoint on the device sending the request and receiving the response.

4.3 CONNECTION RESPONSE (CODE 0x03)

When a device receives a Connection Request packet, it shall send a Connection Response packet. The format of the connection response packet is shown in Figure 4.5.

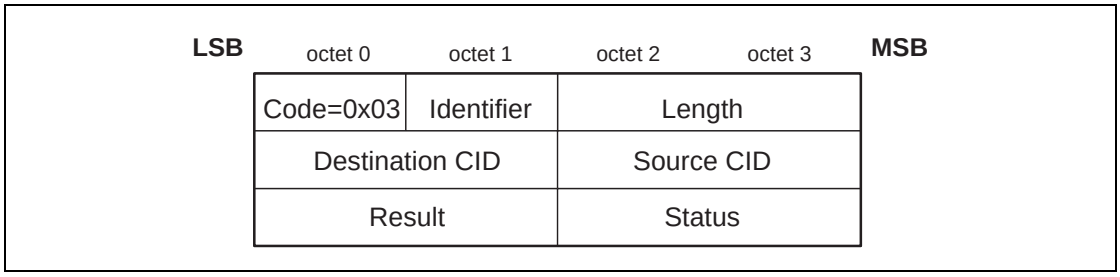

Figure 4.5: Connection Response Packet

The data fields are:

- *Destination Channel Identifier - DCID (2 octets)*

  This field contains the channel endpoint on the device sending this Response packet. Thus, the Destination CID represents the channel endpoint on the device receiving the request and sending the response.

- *Source Channel Identifier - SCID (2 octets)*

  This field contains the channel endpoint on the device receiving this Response packet. This is copied from the SCID field of the connection request packet.

- *Result (2 octets)*

  The result field indicates the outcome of the connection request. The result value of 0x0000 indicates success while a non-zero value indicates the connection request failed or is pending. A logical channel is established on the receipt of a successful result. Table 4.5 on page 55 defines values for this field. The DCID and SCID fields shall be ignored when the result field indicates the connection was refused.

Value	Description
0x0000	Connection successful.
0x0001	Connection pending
0x0002	Connection refused – PSM not supported.
0x0003	Connection refused – security block.
0x0004	Connection refused – no resources available.
Other	Reserved.

Table 4.5: Result values

- *Status (2 octets)*

  Only defined for Result = Pending. Indicates the status of the connection. The status is set to one of the values shown in Table 4.6 on page 56.

Value	Description
0x0000	No further information available
0x0001	Authentication pending
0x0002	Authorization pending
Other	Reserved

Table 4.6: Status values

4.4 CONFIGURATION REQUEST (CODE 0x04)

Configuration Request packets are sent to establish an initial logical link transmission contract between two L2CAP entities and also to re-negotiate this contract whenever appropriate. During a re-negotiation session, all data traffic on the channel should be suspended pending the outcome of the negotiation. Each configuration parameter in a Configuration Request shall be related exclusively to either the outgoing or the incoming data traffic but not both of them. In Section 4.13 on page 65, the various configuration parameters and their relation to the outgoing or incoming data traffic are shown. If an L2CAP entity receives a Configuration Request while it is waiting for a response it shall not block sending the Configuration Response, otherwise the configuration process may deadlock.

If no parameters need to be negotiated then no options shall be inserted and the continuation flag (C) shall be set to zero. L2CAP entities in remote devices shall negotiate all parameters defined in this document whenever the default values are not acceptable. Any missing configuration parameters are assumed to have their most recently explicitly or implicitly accepted values. Even if all default values are acceptable, a Configuration Request packet with no options shall be sent. Implicitly accepted values are default values for the configuration parameters that have not been explicitly negotiated for the specific channel under configuration.

Each configuration parameter is one-directional. The configuration parameters describe the non default parameters the device sending the Configuration Request will accept. The configuration request can not request a change in the parameters the device receiving the request will accept.

If a device needs to establish the value of a configuration parameter the remote device will accept, then it must wait for a configuration request containing that configuration parameter to be sent from the remote device.

See Section 7.1 on page 113 for details of the configuration procedure.

Figure 4.6 defines the format of the Configuration Request packet.

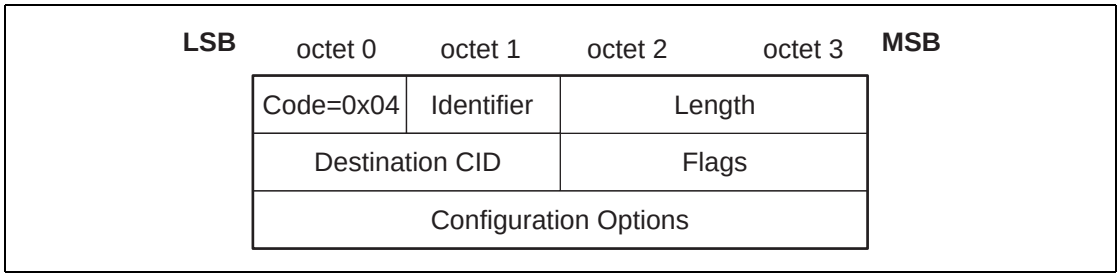

Figure 4.6: Configuration Request Packet

The data fields are:

- *Destination CID - DCID (2 octets)*

  This field contains the channel endpoint on the device receiving this Request packet.

- *Flags (2 octets)*

  Figure 4.7 shows the two-octet Flags field. Note the most significant bit is shown on the left.

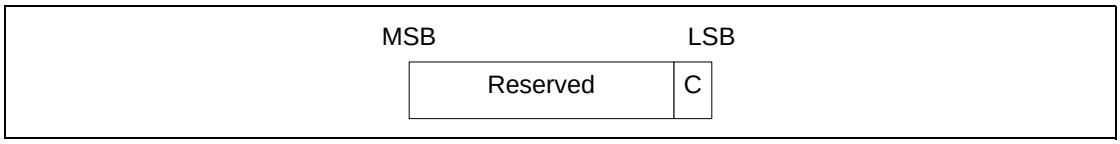

Figure 4.7: Configuration Request Flags field format

Only one flag is defined, the Continuation flag (C).

When both L2CAP entities support the Extended Flow Specification option, the Continuation flag shall not be used and shall be set to zero in all Configuration Request and Response packets.

When all configuration options cannot fit into a Configuration Request with length that does not exceed the receiver's MTU_{sig}, the options shall be passed in multiple configuration command packets. If all options fit into the receiver's MTU_{sig}, then they shall be sent in a single configuration request with the continuation flag set to zero. Each Configuration Request shall contain an integral number of options - partially formed options shall not be sent in a packet. Each Request shall be tagged with a different Identifier and shall be matched with a Response with the same Identifier.

When used in the Configuration Request, the continuation flag indicates the responder should expect to receive multiple request packets. The responder shall reply to each Configuration Request packet. The responder may reply to each Configuration Request with a Configuration Response containing the same option(s) present in the Request (except for those error conditions more appropriate for a Command Reject), or the responder may reply with a "Success" Configuration Response packet containing no options, delaying

those options until the full Request has been received. The Configuration Request packet with the continuation flag cleared shall be treated as the Configuration Request event in the channel state machine.

When used in the Configuration Response, the continuation flag shall be set to one if the flag is set to one in the Request. If the continuation flag is set to one in the Response when the matching Request has the flag set to zero, it indicates the responder has additional options to send to the requestor. In this situation, the requestor shall send null-option Configuration Requests (with continuation flag set to zero) to the responder until the responder replies with a Configuration Response where the continuation flag is set to zero. The Configuration Response packet with the continuation flag set to zero shall be treated as the Configuration Response event in the channel state machine.

The result of the configuration transaction is the union of all the result values. All the result values must succeed for the configuration transaction to succeed.

Other flags are reserved and shall be set to zero. L2CAP implementations shall ignore these bits.

- *Configuration Options*

  A list of the parameters and their values to be negotiated shall be provided in the Configuration Options field. These are defined in Section 4.13 on page 65. A Configuration Request may contain no options (referred to as an empty or null configuration request) and can be used to request a response. For an empty configuration request the length field is set to 0x0004.

4.5 CONFIGURATION RESPONSE (CODE 0X05)

Configuration Response packets shall be sent in reply to Configuration Request packets except when the error condition is covered by a Command Reject response. Each configuration parameter value (if any is present) in a Configuration Response reflects an 'adjustment' to a configuration parameter value that has been sent (or, in case of default values, implied) in the corresponding Configuration Request. For example, if a configuration request relates to traffic flowing from device A to device B, the sender of the configuration response may adjust this value for the same traffic flowing from device A to device B, but the response can not adjust the value in the reverse direction.

The options sent in the Response depend on the value in the Result field. Figure 4.8 on page 59 defines the format of the Configuration Response packet. See also Section 7.1 on page 113 for details of the configuration process.

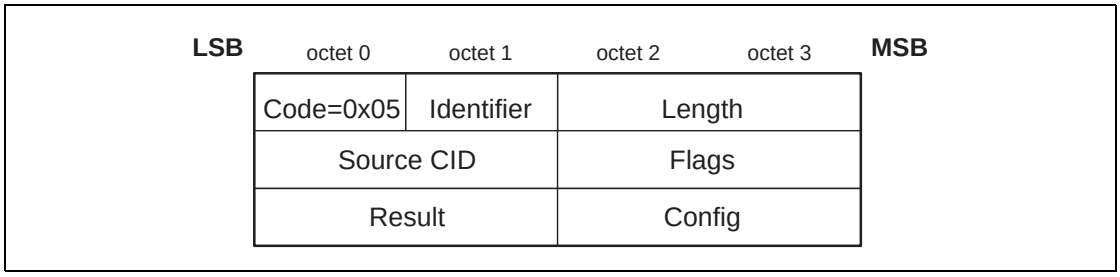

Figure 4.8: Configuration Response Packet

The data fields are:

- *Source CID - SCID (2 octets)*

  This field contains the channel endpoint on the device receiving this Response packet. The device receiving the Response shall check that the Identifier field matches the same field in the corresponding configuration request command and the SCID matches its local CID paired with the original DCID.

- *Flags (2 octets)*

  Figure 4.9 displays the two-octet Flags field. Note the most significant bit is shown on the left.

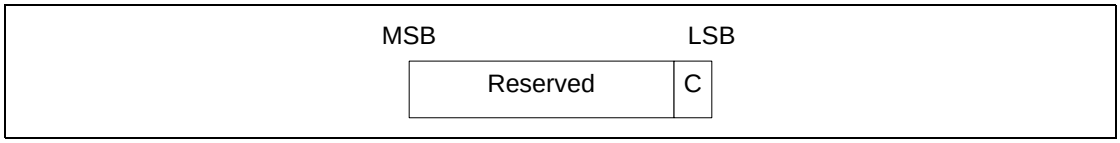

Figure 4.9: Configuration Response Flags field format

  Only one flag is defined, the Continuation flag (C).

  When both L2CAP entities support the Extended Flow Specification option, the Continuation flag shall not be used and shall be set to zero in all Configuration Request and Response packets.

  More configuration responses will follow when C is set to one. This flag indicates that the parameters included in the response are a partial subset of parameters being sent by the device sending the Response packet.

  The other flag bits are reserved and shall be set to zero. L2CAP implementations shall ignore these bits.

- *Result (2 octets)*

  The Result field indicates whether or not the Request was acceptable. See Table 4.7 on page 59 for possible result codes.

Result	Description
0x0000	Success

Table 4.7: Configuration Response Result codes

0x0001	Failure – unacceptable parameters
0x0002	Failure – rejected (no reason provided)
0x0003	Failure – unknown options
0x0004	Pending
0x0005	Failure - flow spec rejected
Other	RESERVED

Table 4.7: Configuration Response Result codes

- *Configuration Options*

  This field contains the list of parameters being configured. These are defined in Section 4.13 on page 65. On a successful result, these parameters contain the return values for any wild card parameter values (see Section 5.3 on page 75) contained in the request.

  On an unacceptable parameters failure (Result=0x0001) the rejected parameters shall be sent in the response with the values that would have been accepted if sent in the original request. Any missing configuration parameters are assumed to have their most recently accepted values and they too shall be included in the Configuration Response if they need to be changed.

  Each configuration parameter is one-directional. The configuration parameters describe the non default parameters the device sending the Configuration Request will accept. The configuration request can not request a change in the parameters the device receiving the request will accept.

  If a device needs to establish the value of a configuration parameter the remote device will accept, then it must wait for a configuration request containing that configuration parameter to be sent from the remote device.

  On an unknown option failure (Result=0x0003), the option(s) that contain an option type field that is not understood by the recipient of the Request shall be included in the Response unless they are hints. Hints are those options in the Request that are skipped if not understood (see Section 4.13 on page 65). Hints shall not be included in the Response and shall not be the sole cause for rejecting the Request.

  The decision on the amount of time (or messages) spent arbitrating the channel parameters before terminating the negotiation is implementation specific.

4.6 DISCONNECTION REQUEST (CODE 0x06)

Terminating an L2CAP channel requires that a disconnection request be sent and acknowledged by a disconnection response. Figure 4.10 on page 61 shows a disconnection request. The receiver shall ensure that both source and destination CIDs match before initiating a channel disconnection.

Once a Disconnection Request is issued, all incoming data in transit on this L2CAP channel shall be discarded and any new additional outgoing data shall

be discarded. Once a disconnection request for a channel has been received, all data queued to be sent out on that channel shall be discarded.

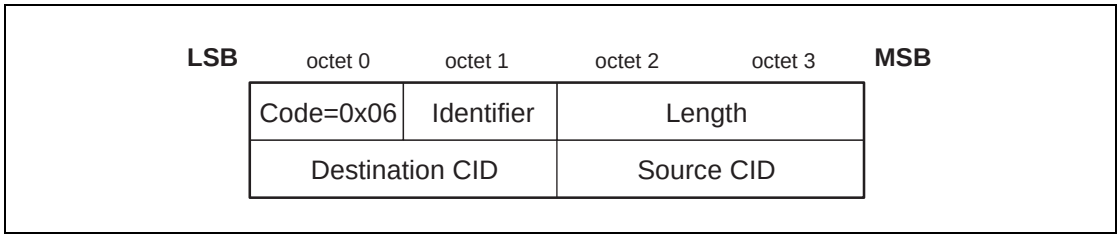

Figure 4.10: Disconnection Request Packet

The data fields are:

- *Destination CID - DCID (2 octets)*

  This field specifies the endpoint of the channel to be disconnected on the device receiving this request.

- *Source CID - SCID (2 octets)*

  This field specifies the endpoint of the channel to be disconnected on the device sending this request.

The SCID and DCID are relative to the sender of this request and shall match those of the channel to be disconnected. If the DCID is not recognized by the receiver of this message, a CommandReject message with 'invalid CID' result code shall be sent in response. If the receiver finds a DCID match but the SCID fails to find the same match, the request should be silently discarded.

4.7 DISCONNECTION RESPONSE (CODE 0x07)

Disconnection responses shall be sent in response to each valid disconnection request.

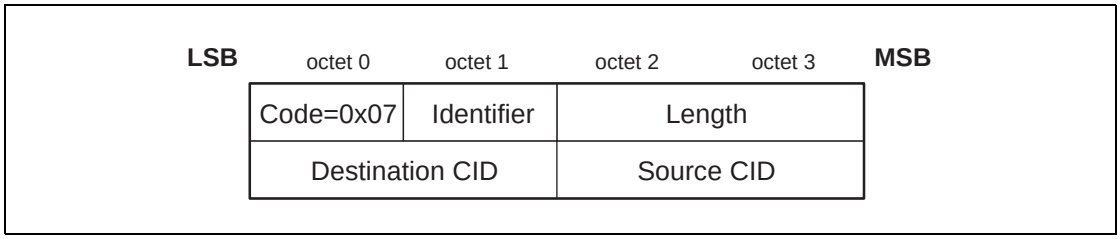

Figure 4.11: Disconnection Response Packet

The data fields are:

- *Destination CID - DCID (2 octets)*

  This field identifies the channel endpoint on the device sending the response.

- *Source CID - SCID (2 octets)*

This field identifies the channel endpoint on the device receiving the response.

The DCID and the SCID (which are relative to the sender of the request), and the Identifier fields shall match those of the corresponding disconnection request command. If the CIDs do not match, the response should be silently discarded at the receiver.

4.8 ECHO REQUEST (CODE 0x08)

Echo requests are used to request a response from a remote L2CAP entity. These requests may be used for testing the link or for passing vendor specific information using the optional data field. L2CAP entities shall respond to a valid Echo Request packet with an Echo Response packet. The Data field is optional and implementation specific. L2CAP entities should ignore the contents of this field if present.

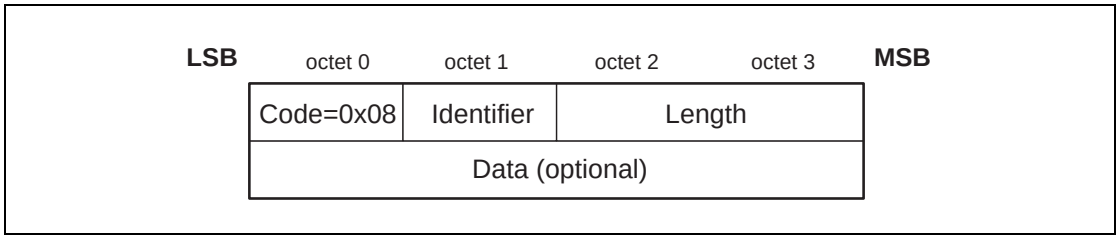

Figure 4.12: Echo Request Packet

4.9 ECHO RESPONSE (CODE 0x09)

An Echo response shall be sent upon receiving a valid Echo Request. The identifier in the response shall match the identifier sent in the Request. The optional and implementation specific data field may contain the contents of the data field in the Request, different data, or no data at all.

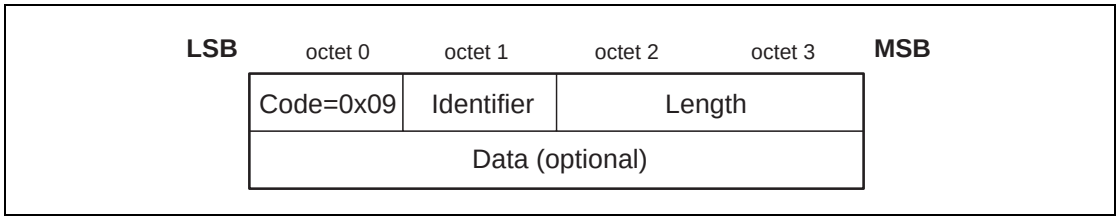

Figure 4.13: Echo Response Packet

4.10 INFORMATION REQUEST (CODE 0X0A)

Information requests are used to request implementation specific information from a remote L2CAP entity. L2CAP implementations shall respond to a valid Information Request with an Information Response. It is optional to send Information Requests.

An L2CAP implementation shall only use optional features or attribute ranges for which the remote L2CAP entity has indicated support through an Informa-

tion Response. Until an Information Response which indicates support for optional features or ranges has been received only mandatory features and ranges shall be used.

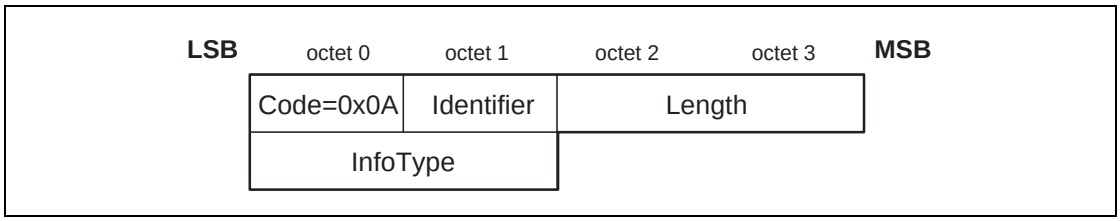

Figure 4.14: Information Request Packet

The data fields are:

- *InfoType (2 octets)*

  The InfoType defines the type of implementation specific information being requested. See Section 4.11 on page 63 for details on the type of information requested.

Value	Description
0x0001	Connectionless MTU
0x0002	Extended features supported
0x0003	Fixed Channels supported
Other	Reserved

Table 4.8: InfoType definitions

L2CAP entities shall not send an Information Request packet with InfoType 0x0003 until first verifying that the Fixed Channels bit is set in the Extended feature mask of the remote device.

4.11 INFORMATION RESPONSE (CODE 0X0B)

An information response shall be sent upon receiving a valid Information Request. The identifier in the response shall match the identifier sent in the Request. The data field shall contain the value associated with the InfoType field sent in the Request, or shall be empty if the InfoType is not supported.

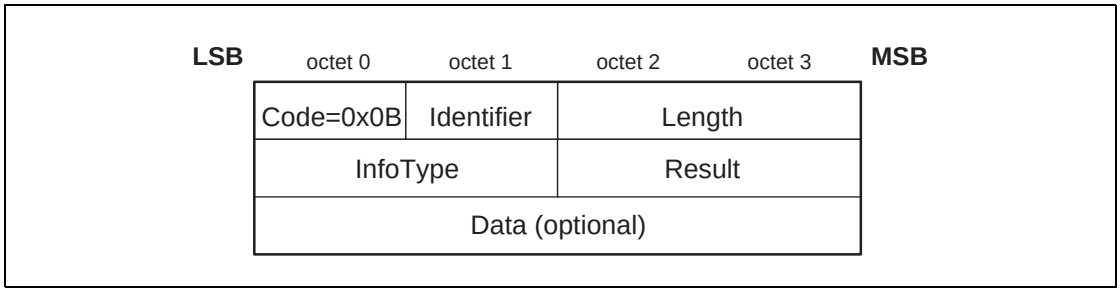

Figure 4.15: Information Response Packet

The data fields are:

- *InfoType (2 octets)*

  The InfoType defines the type of implementation specific information that was requested. This value shall be copied from the InfoType field in the Information Request.

- *Result (2 octets)*

  The Result contains information about the success of the request. If result is "Success", the data field contains the information as specified in Table 4.10 on page 64. If result is "Not supported", no data shall be returned.

Value	Description
0x0000	Success
0x0001	Not supported
Other	Reserved

Table 4.9: Information Response Result values

- *Data (0 or more octets)*

  The contents of the Data field depends on the InfoType.
  For InfoType = 0x0001 the data field contains the remote entity's 2-octet acceptable connectionless MTU. The default value is defined in Section 3.2 on page 41.

  For InfoType = 0x0002, the data field contains the 4 octet L2CAP extended feature mask. The feature mask refers to the extended features that the L2CAP entity sending the Information Response supports. The feature bits contained in the L2CAP feature mask are specified in Section 4.12 on page 65.

  For InfoType = 0x0003, the data field contains an 8 octet bit map that indicates which Fixed L2CAP Channels (i.e., the L2CAP channels that use a CID from 0x0000 to 0x003F) are supported. A list of available fixed channels is provided in Table 2.1 in Section 2.1. A detailed description of this InfoType data field is given in Section 4.13 on page 65.

  Note: L2CAP entities of versions prior to version 1.2, receiving an Information Request with InfoType = 0x0002 for an L2CAP feature discovery, return an Information Response with result code "Not supported". L2CAP entities at version 1.2 to 2.1 + EDR that have an all zero extended features mask may return an Information Response with result code "Not supported".

InfoType	Data	Data Length (octets)
0x0001	Connectionless MTU	2
0x0002	Extended feature mask	4

Table 4.10: Information Response Data fields

0x0003	Fixed Channels Supported	8

Table 4.10: Information Response Data fields

4.12 EXTENDED FEATURE MASK

The features are represented as a bit mask in the Information Response data field (see Section 4.11 on page 63). For each feature a single bit is specified which shall be set to 1 if the feature is supported and set to 0 otherwise. All unknown, reserved, or unassigned feature bits shall be set to 0.

The feature mask shown in Table 4.11 on page 65 consists of 4 octets (numbered octet 0 ... 3), with bit numbers 0 ... 7 each. Within the Information Response packet data field, bit 0 of octet 0 is aligned leftmost, bit 7 of octet 3 is aligned rightmost.

Note: the L2CAP feature mask was introduced in Bluetooth v1.2 and contains features introduced after Bluetooth v1.1.

No.	Supported feature	Octet	Bit
0	Flow control mode	0	0
1	Retransmission mode	0	1
2	Bi-directional QoS1	0	2
3	Enhanced Retransmission Mode	0	3
4	Streaming Mode	0	4
5	FCS Option	0	5
6	Extended Flow Specification for BR/EDR	0	6
7	Fixed Channels	0	7
8	Extended Window Size	1	0
9	Unicast Connectionless Data Reception	1	1
31	Reserved for feature mask extension	3	7

Table 4.11: Extended feature mask.

1. Peer side supports upper layer control of the Link Manager's Bi-directional QoS, see Section 5.3 on page 75 for more details.

4.13 FIXED CHANNELS SUPPORTED

Each Fixed Channel is represented by a single bit in an 8 octet bit mask. The bit associated with a channel shall be set to 1 if the L2CAP entity supports signaling on that channel. The L2CAP signaling channel is mandatory and therefore the bit associated with that channel shall be set to 1.Table 4.12 shows the format of the bit mask.

CID	Fixed Channel	Value	Octet	Bit
0x0000	Null identifier	Shall be set to 0	0	0
0x0001	L2CAP Signaling channel	Shall be set to 1	0	1
0x0002	Connectionless reception	0 – if not supported 1 – if supported	0	2
0x0003	AMP Manager Protocol Channel	0 – if not supported 1 – if supported	0	3
0x0004 - 0x003E	Reserved	Shall be set to 0 and ignored upon receipt.	0 1-6 7	4-7 0-7 0-6
0x003F	AMP Test Manager	0 – if not supported 1 – if supported	7	7

Table 4.12: Fixed Channels Supported bit mask

An L2CAP entity shall not transmit on any fixed channel (with the exception of the L2CAP signaling channel) until it has received a Fixed Channels Supported InfoType from the peer L2CAP entity indicating support for the channel, or has received a valid signaling packet from the remote device on the Fixed channel. All packets received on a non-supported fixed channel shall be ignored.

4.14 CREATE CHANNEL REQUEST (CODE 0X0C)

The Create Channel request packet, shown in Figure 4.16, is sent to create an L2CAP channel between two devices over the Controller identified by the Controller ID.

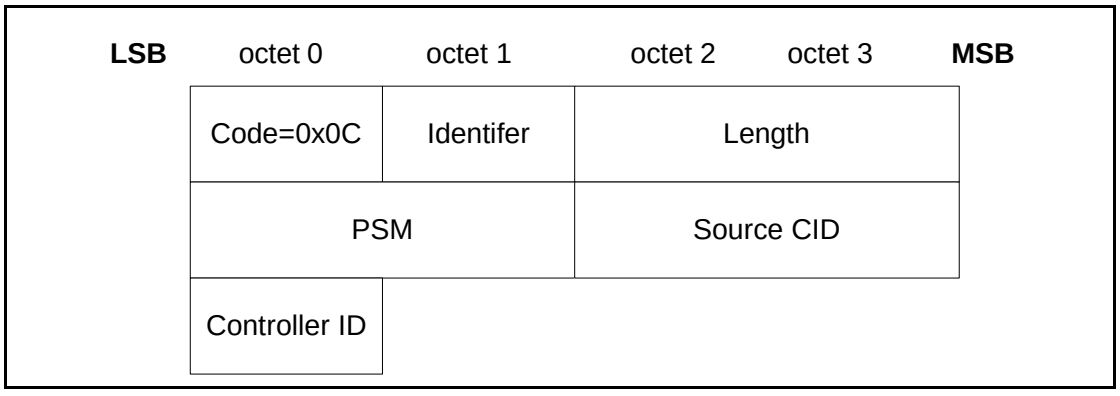

Figure 4.16: Create Channel Request Packet

The data fields are:

- *Protocol/Service Multiplexer –PSM (2 octets (minimum))*

  The PSM field is at least two octets in length. The structure of the PSM field is based on the ISO 3309 extension mechanism for address fields. All PSM

values shall be *odd*, that is, the least significant bit of the least significant octet must be '1'. Also, all PSM values shall have the least significant bit of the most significant octet equal to '0'. This allows the PSM field to be extended beyond 16 bits. PSM values are separated into two ranges. Values in the first range are assigned by the Bluetooth SIG and indicate protocols. The second range of values are dynamically allocated and used in conjunction with the Service Discovery Protocol (SDP). The dynamically assigned values may be used to support multiple implementations of a particular protocol. PSM values are defined in the Assigned Numbers document.

- *Source CID –SCID (2 octets)*

  The source CID is two octets in length and represents a channel endpoint on the device sending the request. Once the channel has been configured, data packets flowing to the sender of the request shall be sent to this CID. Thus, the Source CID represents the channel endpoint on the device sending the request and receiving the response.

- *Controller Identifier –Controller ID (1 octet)*

  The Controller ID is one octet in length and represents the Controller physical link over which the channel shall be created. The Controller ID is the identifier of the Controller on the remote device obtained via an AMP Manager Discover Available AMPs request. See Part E, AMP Manager Protocol Specification on page 363 The Controller physical link shall already exist.

4.15 CREATE CHANNEL RESPONSE (CODE 0X0D)

When a device receives a Create Channel Request Packet, it shall send a Create Channel Response packet. The format of the connection response packet is shown in Figure 4.17.

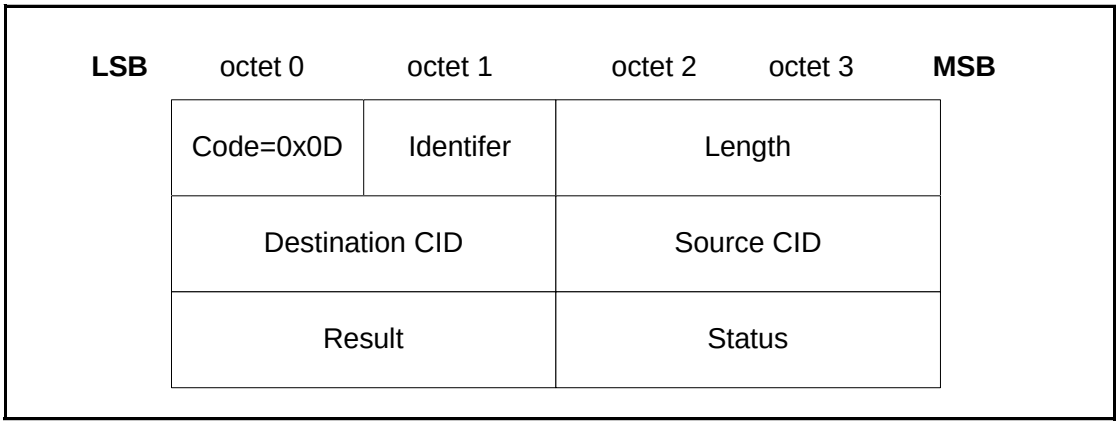

Figure 4.17: Create Channel Response Packet

The data fields are:

- *Destination Channel Identifier–DCID (2 octets)*

This field contains the channel endpoint on the device sending this Response packet. Thus, the Destination CID represents the channel endpoint on the device receiving the request and sending the response.

- *Source Channel Identifier–SCID (2 octets)*

  This field contains the channel endpoint on the device receiving this Response packet. This is copied from the SCID field of the Create Channel Request packet.

- *Result (2 octets)*

  The result field indicates the outcome of the Create Channel Request. The result value of 0x0000 indicates success while a non-zero value indicates the Create Channel Request failed or is pending. A logical channel is established on the receipt of a successful result. Table 4.13 defines values for this field. The DCID and SCID fields shall be ignored when the result field indicates the connection was refused.

Result	Description
0x0000	Connection successful
0x0001	Connection pending
0x0002	Connection refused - PSM not supported
0x0003	Connection refused - security block
0x0004	Connection refused - no resources available
0x0005	Connection refused - Controller ID not supported
Other	Reserved

Table 4.13: Result values

- *Status (2 octets)*

  Only defined for Result = Pending. Indicates the status of the connection. The status is set to one of the values shown in Table 4.14.

Value	Description
0x0000	No further information available
0x0001	Authentication pending
0x0002	Authorization pending
Other	Reserved

Table 4.14: Status values

4.16 MOVE CHANNEL REQUEST (CODE 0X0E)

Move Channel request packets are sent to move an existing L2CAP channel from a physical link on one Controller to a physical link on another Controller.

The CIDs for the L2CAP channel are not changed by a Move operation. Figure 4.18 illustrates a Move Channel request packet. Channels shall only be moved if configured to use Enhanced Retransmission mode or Streaming mode. Fixed channels (see Section 2.1) shall not be moved.

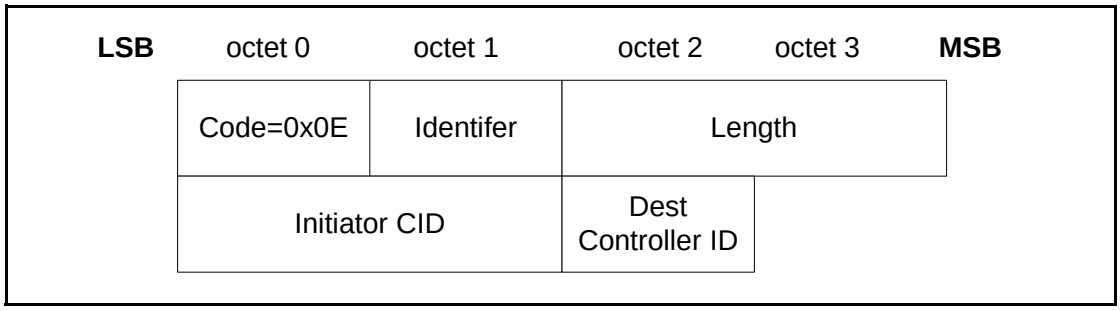

Figure 4.18: Move Channel Request Packet

The data fields are:

- *Initiator Channel Identifier - ICID (2 octets)*

  This field contains the channel endpoint on the device sending this Request packet.

- *Destination Controller Identifier - Dest Controller ID (1 octet)*

  The Dest Controller ID is one octet in length and represents the Controller physical link to which the channel shall be moved. The Controller ID is the identifier of the Controller on the remote device obtained via an AMP Manager Discover Available AMPs request. See Part E, AMP Manager Protocol Specification on page 363.The Controller physical link shall already exist.

4.17 MOVE CHANNEL RESPONSE (CODE 0X0F)

When a device receives a Move Channel request packet it shall send a Move Channel response packet. If the device has sent its own Move Channel request then a collision has occurred. One of the requests shall be rejected while the other shall proceed. The Move Channel request that shall be rejected is based on the algorithm in Section 7.7

The format of Move Channel response packet is shown in Figure 4.19.

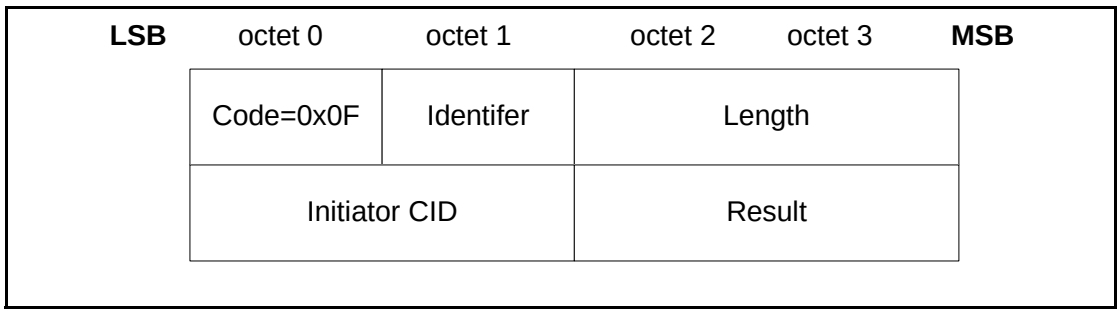

Figure 4.19: Move Channel Response Packet

The data fields are:

- *Initiator Channel Identifier – ICID (2 octets)*

  This field contains the channel endpoint on the device that sent the Move Channel Request (device receiving this Response packet). This is the same value as was sent in the Move Channel Request packet.

- *Result (2 octets)*

  The result field indicates the outcome of the move request. The result value of 0x0000 indicates success while a non-zero value indicates the move request failed. A logical channel is moved on the receipt of a successful result. Table 4.15 defines values for this field. The ICID field shall be ignored when the result field indicates the move was refused.

Result	Description
0x0000	Move Success
0x0001	Move Pending
0x0002	Move refused - Controller ID not supported
0x0003	Move refused - new Controller ID is same as old Controller ID
0x0004	Move refused - Configuration not supported
0x0005	Move refused - Move Channel collision
0x0006	Move refused - Channel not allowed to be moved
Other	Reserved

Table 4.15: Result values

4.18 MOVE CHANNEL CONFIRMATION (CODE 0X10)

When the initiator of a Move Channel request receives a Move Channel response with a result code other than "pending" from the responder, it shall send a Move Channel confirmation packet, that will conclude the Move Channel procedure, informing the responder that all the QoS parameters were successfully (or not) negotiated. The format of Move Channel confirmation packet is shown in Figure 4.20.

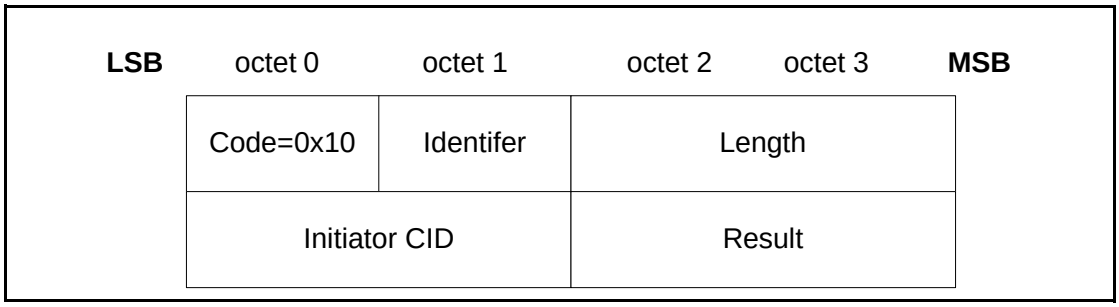

Figure 4.20: Move Channel Confirmation Packet

The data fields are:

- *Initiator Channel Identifier – ICID (2 octets)*

  This field contains the channel endpoint on the device sending the Move Channel Confirmation packet. This is the same value as was sent in the original Move Channel Request packet.

- *Result (2 octets)*

  The result field indicates the outcome of the move confirmation. The result value of 0x0000 indicates success while a non-zero value indicates the move failed.

Result	Description
0x0000	Move success - both sides succeed
0x0001	Move failure - one or both sides refuse
Other	Reserved

Table 4.16: Result values

4.19 MOVE CHANNEL CONFIRMATION RESPONSE (CODE 0X11)

When a device receives a Move Channel Confirmation packet it shall send a Move Channel Confirmation response packet. The purpose of the Move Channel Confirmation Response is so that Move Channel Confirmation is consistent with the command/response style. The format of Move Channel Confirmation response packet is shown in Figure 4.21.

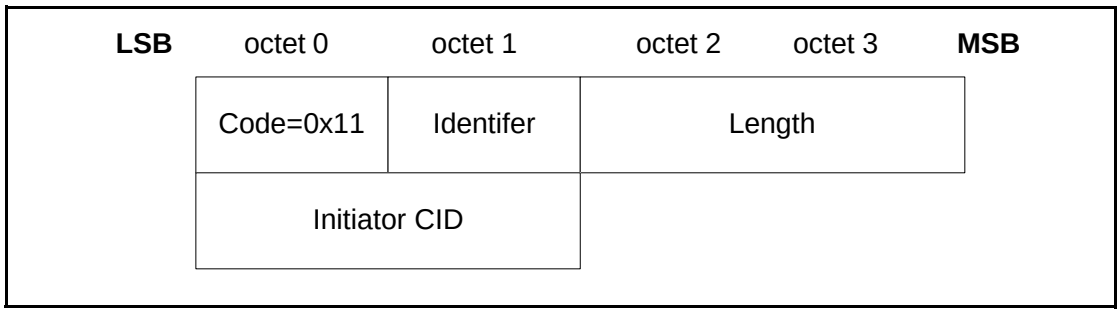

Figure 4.21: Move Channel Confirmation Response Packet

The data field is:

- *Initiator Channel Identifier – ICID (2 octets)*

  This field contains the channel endpoint on the device that sent the Move Channel Confirmation packet.

5 CONFIGURATION PARAMETER OPTIONS

Options are a mechanism to extend the configuration parameters. Options shall be transmitted as information elements containing an option type, an option length, and one or more option data fields. Figure 5.1 illustrates the format of an option.

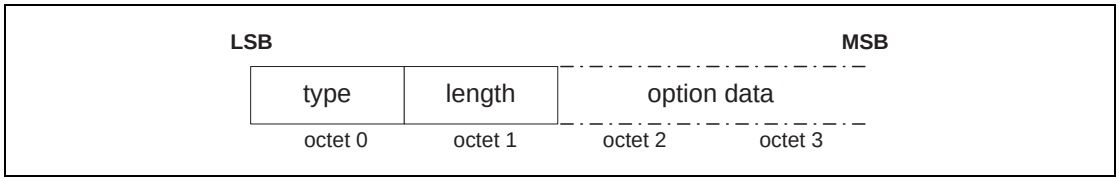

Figure 5.1: Configuration option format

The configuration option fields are:

- *Type (1 octet)*

  The option type field defines the parameters being configured. The most significant bit of the type determines the action taken if the option is not recognized.

  0 - option must be recognized; if the option is not recognized then refuse the configuration request

  1 - option is a hint; if the option is not recognized then skip the option and continue processing

- *Length (1 octet)*

  The length field defines the number of octets in the option data. Thus an option type without option data has a length of 0.

- *Option data*

  The contents of this field are dependent on the option type.

5.1 MAXIMUM TRANSMISSION UNIT (MTU)

This option specifies the maximum SDU size the sender of this option is capable of accepting for a channel. The type is 0x01, and the payload length is 2 octets, carrying the two-octet MTU size value as the only information element (see Figure 5.2 on page 73). Unlike the B-Frame length field, the I-Frame length field may be greater than the configured MTU because it includes the octet lengths of the Control, L2CAP SDU Length (when present), and frame check sequence fields as well as the Information octets.

MTU is not a negotiated value, it is an informational parameter that each device can specify independently. It indicates to the remote device that the local device can receive, in this channel, an MTU larger than the minimum required. All L2CAP implementations shall support a minimum MTU of 48 octets, however some protocols and profiles explicitly require support for a

larger MTU. The minimum MTU for a channel is the larger of the L2CAP minimum 48 octet MTU and any MTU explicitly required by the protocols and profiles using that channel. (Note: the MTU is only affected by the profile directly using the channel. For example, if a service discovery transaction is initiated by a non service discovery profile, that profile does not affect the MTU of the L2CAP channel used for service discovery).

The following rules shall be used when responding to a configuration request specifying the MTU for a channel:

- A request specifying any MTU greater than or equal to the minimum MTU for the channel shall be accepted.
- A request specifying an MTU smaller than the minimum MTU for the channel may be rejected.

The signaling described in Section 4.5 on page 58 may be used to reject an MTU smaller than the minimum MTU for a channel. The "failure-unacceptable parameters" result sent to reject the MTU shall include the proposed value of MTU that the remote device intends to transmit. It is implementation specific whether the local device continues the configuration process or disconnects the channel.

If the remote device sends a positive configuration response it should include the actual MTU to be used on this channel for traffic flowing into the local device. This is the minimum of the MTU in the configuration request and the outgoing MTU capability of the device sending the configuration response. The new agreed value (the default value in a future re-configuration) is the value specified in the response.

The MTU to be used on this channel for the traffic flowing in the opposite direction will be established when the remote device sends its own Configuration Request as explained in Section 4.4 on page 56.

If the configured mode is Enhanced Retransmission mode or Streaming mode then MTU shall not be reconfigured to a smaller size.

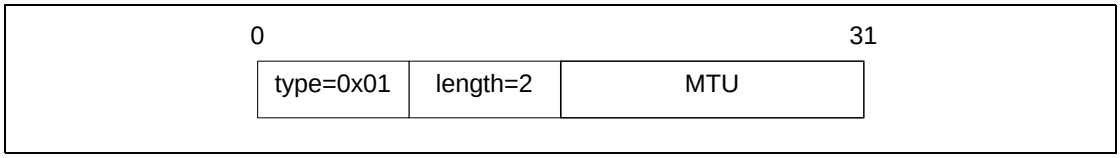

Figure 5.2: MTU Option Format

The option data field is:

- Maximum Transmission Unit - MTU (2 octets)

  The MTU field is the maximum SDU size, in octets, that the originator of the Request can accept for this channel. The MTU is asymmetric and the sender of the Request shall specify the MTU it can receive on this channel if it differs from the default value. L2CAP implementations shall support a minimum MTU size of 48 octets. The default value is 672 octets[1].

5.2 FLUSH TIMEOUT OPTION

This option is used to inform the recipient of the Flush Timeout the sender is going to use.This option shall not be used if the Extended Flow Specification is used. The Flush Timeout is defined in the BR/EDR Baseband specification “Flushing Payloads” on page 145[vol. 2]. The type is 0x02 and the payload size is 2 octets.

If the remote device returns a negative response to this option and the local device cannot honor the proposed value, then it shall either continue the configuration process by sending a new request with the original value, or disconnect the channel. The flush timeout applies to all channels on the same ACL logical transport but may be overridden on a packet by packet basis by marking individual L2CAP packets as non-automatically-flushable via the Packet_Boundary_Flag in the HCI ACL Data Packet (see Section 1.1 on page 26).

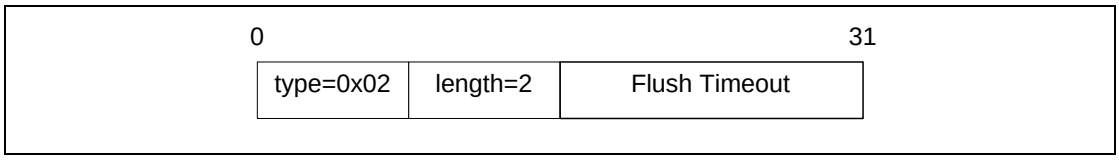

Figure 5.3: Flush Timeout option format.

The option data field is:

- *Flush Timeout*

  This value is the Flush Timeout in milliseconds. This is an asymmetric value and the sender of the Request shall specify its flush timeout value if it differs from the default value of 0xFFFF.

  Possible values are:

  0x0001 - no retransmissions at the baseband level should be performed since the minimum polling interval is 1.25 ms.

  0x0002 to 0xFFFE - Flush Timeout used by the baseband.

1. The default MTU was selected based on the payload carried by two baseband DH5 packets (2*341=682 octets) minus the baseband ACL headers (2*2=4 octets) and a 6-octet L2CAP header. Note that the L2CAP header length is 4 octets (see Section 3.3.1) but for historical reasons an L2CAP header length of 6 bytes is used.

0xFFFF - an infinite amount of retransmissions. This is also referred to as a 'reliable channel'. In this case, the baseband shall continue retransmissions until physical link loss is declared by link manager timeouts.

5.3 QUALITY OF SERVICE (QOS) OPTION

This option specifies a flow specification similar to RFC 1363[1]. Although the RFC flow specification addresses only the transmit characteristics, the Bluetooth QoS interface can handle the two directions (Tx and Rx) in the negotiation as described below.

If no QoS configuration parameter is negotiated the link shall assume the default parameters. The QoS option is type 0x03.

In a configuration request, this option describes the outgoing traffic flow from the device sending the request. In a positive Configuration Response, this option describes the incoming traffic flow agreement to the device sending the response. In a negative Configuration Response, this option describes the preferred incoming traffic flow to the device sending the response.

L2CAP implementations are only required to support 'Best Effort' service, support for any other service type is optional. Best Effort does not require any guarantees. If no QoS option is placed in the request, Best Effort shall be assumed. If any QoS guarantees are required then a QoS configuration request shall be sent.

The remote device's Configuration Response contains information that depends on the value of the result field (see Section 4.5 on page 58). If the request was for Guaranteed Service, the response shall include specific values for any wild card parameters (see Token Rate and Token Bucket Size descriptions) contained in the request. If the result is "Failure – unacceptable parameters", the response shall include a list of outgoing flow specification parameters and parameter values that would make a new Connection Request from the local device acceptable by the remote device. Both explicitly referenced in a Configuration Request or implied configuration parameters can be included in a Configuration Response. Recall that any missing configuration parameters from a Configuration Request are assumed to have their most recently accepted values.

If a configuration request contains any QoS option parameters set to "do not care" then the configuration response shall set the same parameters to "do not care". This rule applies for both Best Effort and Guaranteed Service.

1. Internet Engineering Task Force, "A Proposed Flow Specification", RFC 1363, September 1992.

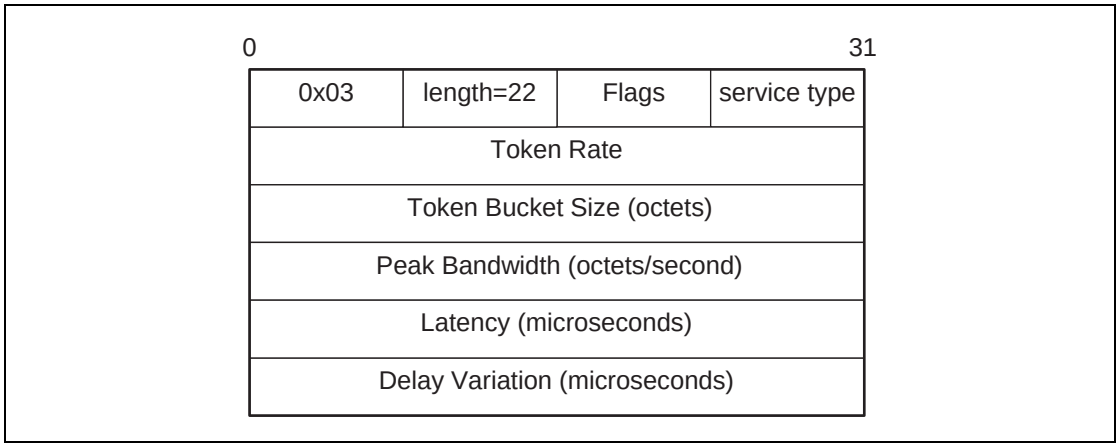

Figure 5.4: Quality of Service (QoS) option format containing Flow Specification.

The option data fields are:

- *Flags (1 octet)*

  Reserved for future use and shall be set to 0 and ignored by the receiver.

- *Service Type (1 octet)*

  This field indicates the level of service required. Table 5.1 on page 76 defines the different services available. The default value is ‘Best effort’.

  If ’Best effort’ is selected, the remaining parameters should be treated as optional by the remote device. The remote device may choose to ignore the fields, try to satisfy the parameters but provide no response (QoS option omitted in the Response message), or respond with the settings it will try to meet.

  If ’No traffic’ is selected, the remainder of the fields shall be ignored because there is no data being sent across the channel in the outgoing direction.

Value	Description
0x00	No traffic
0x01	Best effort (Default)
0x02	Guaranteed
Other	Reserved

Table 5.1: Service type definitions

- *Token Rate (4 octets)*

  The value of this field represents the average data rate with which the application transmits data. The application may send data at this rate continuously. On a short time scale the application may send data in excess of the average data rate, dependent on the specified Token Bucket Size and Peak Bandwidth (see below). The Token Bucket Size and Peak Bandwidth allow the application to transmit data in a 'bursty' fashion.

The Token Rate signalled between two L2CAP peers is the data transmitted by the application and shall exclude the L2CAP protocol overhead. The Token Rate signalled over the interface between L2CAP and the Link Manager shall include the L2CAP protocol overhead. Furthermore the Token Rate value signalled over this interface may also include the aggregation of multiple L2CAP channels onto the same ACL logical transport.

The Token Rate is the rate with which traffic credits are provided. Credits can be accumulated up to the Token Bucket Size. Traffic credits are consumed when data is transmitted by the application. When traffic is transmitted, and there are insufficient credits available, the traffic is non-conformant. The Quality of Service guarantees are only provided for conformant traffic. For non-conformant traffic there may not be sufficient resources such as bandwidth and buffer space. Furthermore non-conformant traffic may violate the QoS guarantees of other traffic flows.

The Token Rate is specified in octets per second. The value 0x00000000 indicates no token rate is specified. This is the default value and means “do not care”. When the Guaranteed service is selected, the default value shall not be used. The value 0xFFFFFFFF is a wild card matching the maximum token rate available. The meaning of this value depends on the service type. For best effort, the value is a hint that the application wants as much bandwidth as possible. For Guaranteed service the value represents the maximum bandwidth available at the time of the request.

- *Token Bucket Size (4 octets)*

  The Token Bucket Size specifies a limit on the 'burstiness' with which the application may transmit data. The application may offer a burst of data equal to the Token Bucket Size instantaneously, limited by the Peak Bandwidth (see below). The Token Bucket Size is specified in octets.

  The Token Bucket Size signalled between two L2CAP peers is the data transmitted by the application and shall exclude the L2CAP protocol overhead. The Token Bucket Size signalled over the interface between L2CAP and Link Manager shall include the L2CAP protocol overhead. Furthermore the Token Bucket Size value over this interface may include the aggregation of multiple L2CAP channels onto the same ACL logical transport.

  The value of 0x00000000 means that no token bucket is needed; this is the default value. When the Guaranteed service is selected, the default value shall not be used. The value 0xFFFFFFFF is a wild card matching the maximum token bucket available. The meaning of this value depends on the service type. For best effort, the value indicates the application wants a bucket as big as possible. For Guaranteed service the value represents the maximum L2CAP SDU size.

  The Token Bucket Size is a property of the traffic carried over the L2CAP channel. The Maximum Transmission Unit (MTU) is a property of an L2CAP implementation. For the Guaranteed service the Token Bucket Size shall be smaller or equal to the MTU.

- *Peak Bandwidth (4 octets)*

  The value of this field, expressed in octets per second, limits how fast packets from applications may be sent back-to-back. Some systems can take advantage of this information, resulting in more efficient resource allocation.

  The Peak Bandwidth signalled between two L2CAP peers specifies the data transmitted by the application and shall exclude the L2CAP protocol overhead. The Peak Bandwidth signalled over the interface between L2CAP and Link Manager shall include the L2CAP protocol overhead. Furthermore the Peak Bandwidth value over this interface may include the aggregation of multiple L2CAP channels onto the same ACL logical transport.

  The value of 0x00000000 means "don't care". This states that the device has no preference on incoming maximum bandwidth, and is the default value. When the Guaranteed service is selected, the default value shall not be used.

- *Access Latency (4 octets)*

  The value of this field is the maximum acceptable delay of an L2CAP packet to the air-interface. The precise interpretation of this number depends on over which interface this flow parameter is signalled. When signalled between two L2CAP peers, the Access Latency is the maximum acceptable delay between the instant when the L2CAP SDU is received from the upper layer and the start of the L2CAP SDU transmission over the air. When signalled over the interface between L2CAP and the Link Manager, it is the maximum delay between the instant the first fragment of an L2CAP PDU is stored in the Host Controller buffer and the initial transmission of the L2CAP packet on the air.

  Thus the Access Latency value may be different when signalled between L2CAP and the Link Manager to account for any queuing delay at the L2CAP transmit side. Furthermore the Access Latency value may include the aggregation of multiple L2CAP channels onto the same ACL logical transport.

  The Access Latency is expressed in microseconds. The value 0xFFFFFFFF means “do not care” and is the default value. When the Guaranteed service is selected, the default value shall not be used.

- *Delay Variation (4 octets)*

  The value of this field is the difference, in microseconds, between the maximum and minimum possible delay of an L2CAP SDU between two L2CAP peers. The Delay Variation is a purely informational parameter. The value 0xFFFFFFFF means “do not care” and is the default value.

5.4 RETRANSMISSION AND FLOW CONTROL OPTION

This option specifies whether retransmission and flow control is used. If the feature is used incoming parameters are specified by this option.

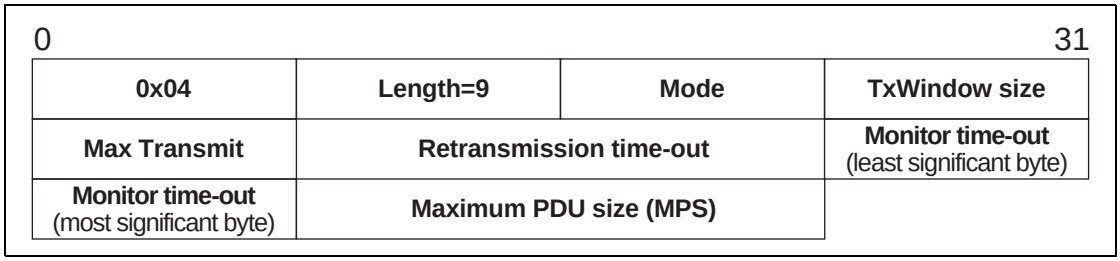

Figure 5.5: Retransmission and Flow Control option format.

The option data fields are:

- *Mode (1 octet)*

  The field contains the requested mode of the link. Possible values are shown in Table 5.2 on page 79.

Value	Description
0x00	L2CAP Basic Mode
0x01	Retransmission mode
0x02	Flow control mode
0x03	Enhanced Retransmission mode
0x04	Streaming mode
Other values	Reserved for future use

Table 5.2: Mode definitions.

  The Basic L2CAP mode is the default. If Basic L2CAP mode is requested then all other parameters shall be ignored.

  Enhanced Retransmission mode should be enabled if a reliable channel has been requested. Enhanced Retransmission mode shall only be sent to an L2CAP entity that has previously advertised support for the mode in its Extended Feature Mask (see section 4.12).

  Streaming mode should be enabled if a finite L2CAP Flush Time-Out is set on an L2CAP connection. Streaming mode shall only be sent to a device that has previously advertised support for the mode in the Extended Feature Mask (see section 4.12).

  Flow Control mode and Retransmission mode shall only be used for backwards compatibility with L2CAP entities that do not support Enhanced Retransmission mode or Streaming mode.

- *TxWindow size (1 octet)*

  This field specifies the size of the transmission window for Flow Control mode, Retransmission mode, and Enhanced Retransmission mode. The range is 1 to 32 for Flow Control mode and Retransmission mode. The range is 1 to 63 for Enhanced Retransmission mode.

In Retransmission mode and Flow Control mode this parameter should be negotiated to reflect the buffer sizes allocated for the connection on both sides. In general, the Tx Window size should be made as large as possible to maximize channel utilization. Tx Window size also controls the delay on flow control action. The transmitting device can send as many PDUs fit within the window.

In Enhanced Retransmission mode this value indicates the maximum number of I-frames that the sender of the option can receive without acknowledging some of the received frames. It is not negotiated. It is an informational parameter that each L2CAP entity can specify separately. In general, the TxWindow size should be made as large as possible to maximize channel utilization. The transmitting L2CAP entity can send as many PDUs as will fit within the receiving L2CAP entity's TxWindow. TxWindow size values in a Configuration Response indicate the maximum number of packets the sender can send before it requires an acknowledgement. In other words it represents the number of unacknowledged packets the send can hold. The value sent in a Configuration Response shall be less than or equal to the TxWindow size sent in the Configuration Request. The receiver of this option in the Configuration Response may use this value as part of its acknowledgement algorithm.

In Streaming mode this value is not used and shall be set to 0 and ignored by the receiving device.

- *MaxTransmit (1 octet)*

  This field controls the number of transmissions of a single I-frame that L2CAP is allowed to try in Retransmission mode and Enhanced Retransmission mode. The minimum value is 1 (one transmission is permitted).

  MaxTransmit controls the number of retransmissions that L2CAP is allowed to try in Retransmission mode and Enhanced Retransmission mode before accepting that a packet and the channel is lost. When a packet is lost after being transmitted MaxTransmit times the channel shall be disconnected by sending a Disconnect request (see Section 4.6). In Enhanced Retransmission mode MaxTransmit controls the number of retransmissions for I-frames and S-frames with P-bit set to 1. The sender of the option in a Configuration Request specifies the value that shall be used by the receiver of the option. MaxTransmit values in a Configuration Response shall be ignored. Lower values might be appropriate for services requiring low latency. Higher values will be suitable for a link requiring robust operation. A value of 1 means that no retransmissions will be made but also means that the channel will be disconnected as soon as a packet is lost. MaxTransmit shall not be set to zero in Retransmission mode. In Enhanced Retransmission mode a value of zero for MaxTransmit means infinite retransmissions.

  In Streaming mode this value is not used and shall be set to 0 and ignored by the receiving L2CAP entity.

- *Retransmission time-out (2 octets)*

  This is the value in milliseconds of the retransmission time-out (this value is used to initialize the RetransmissionTimer).

The purpose of this timer in retransmission mode is to activate a retransmission in some exceptional cases. In such cases, any delay requirements on the channel may be broken, so the value of the timer should be set high enough to avoid unnecessary retransmissions due to delayed acknowledgements. Suitable values could be 100's of milliseconds and up.

The purpose of this timer in flow control mode is to supervise I-frame transmissions. If an acknowledgement for an I-frame is not received within the time specified by the RetransmissionTimer value, either because the I-frame has been lost or the acknowledgement has been lost, the timeout will cause the transmitting side to continue transmissions. Suitable values are implementation dependent.

The purpose of this timer in Enhanced Retransmission mode is to detect lost I-frames and initiate appropriate error recovery. The value used for the Retransmission time-out is specified in Section 8.6.2. The value sent in a Configuration Request is also specified in Section 8.6.2. A value for the Retransmission time-out shall be sent in a positive Configuration Response and indicates the value that will be used by the sender of the Configuration Response.

In Streaming mode this value is not used and shall be set to 0 and ignored by the receiving L2CAP entity.

- *Monitor time-out (2 octets)*

  In Retransmission mode this is the value in milliseconds of the interval at which S-frames should be transmitted on the return channel when no frames are received on the forward channel. (this value is used to initialize the MonitorTimer, see below).

  This timer ensures that lost acknowledgements are retransmitted. Its main use is to recover Retransmission Disable Bit changes in lost frames when no data is being sent. The timer shall be started immediately upon transitioning to the open state. It shall remain active as long as the connection is in the open state and the retransmission timer is not active. Upon expiration of the Monitor timer an S-frame shall be sent and the timer shall be restarted. If the monitor timer is already active when an S-frame is sent, the timer shall be restarted. An idle connection will have periodic monitor traffic sent in both directions. The value for this time-out should also be set to 100's of milliseconds or higher.

  In Enhanced Retransmission mode the Monitor time-out is used to detect lost S-frames with P-bit set to 1. If the time-out occurs before a response with the F-bit set to 1 is received the S-frame is resent. The value used for the Monitor time-out is specified in Section 8.6.3. The value sent in a Configuration Request is also specified in Section 8.6.2. A value for the Monitor time-out shall be sent in a positive Configuration Response and indicates the value that will be used by the sender of the Configuration Response.

  In Streaming mode this value is not used and shall be set to 0 and ignored by the receiving device.

- *Maximum PDU payload Size - MPS (2 octets)*

The maximum size of payload data in octets that the L2CAP layer entity sending the option in a Configuration Request is capable of accepting, i.e. the MPS corresponds to the maximum PDU payload size. Values used for MPS should take into account all possible Controllers to which the channel might be moved given that the MPS value cannot be renegotiated once the channel is created. Each device specifies the value separately. An MPS value sent in a positive Configuration Response is the actual MPS the receiver of the Configuration Request will use on this channel for traffic flowing into the local device. An MPS value sent in a positive Configuration Response shall be equal to or smaller than the value sent in the Configuration Request.

When using Retransmission mode and Flow Control mode the settings are configured separately for the two directions of an L2CAP connection. For example, in operating with an L2CAP entity implementing an earlier version of the core specification, an L2CAP connection can be configured as Flow Control mode in one direction and Retransmission mode in the other direction. If Basic L2CAP mode is configured in one direction and Retransmission mode or Flow control mode is configured in the other direction on the same L2CAP channel then the channel shall not be used.

Note: This asymmetric configuration only occurs during configuration.

When using Enhanced Retransmission mode or Streaming mode, both directions of the L2CAP connection shall be configured to the same mode. A precedence algorithm shall be used by both devices so a mode conflict can be resolved in a quick and deterministic manner.

There are two operating states:

- A device has a desired mode but is willing to use another mode (known as "state 1"), and
- A device requires a specific mode (known as "state 2"). This includes cases where channels are created over AMP links or BR/EDR links operating as described in Section 7.10.

In state 1, Basic L2CAP mode has the highest precedence and shall take precedence over Enhanced Retransmission mode and Streaming mode. Enhanced Retransmission mode has the second highest precedence and shall take precedence over all other modes except Basic L2CAP mode. Streaming mode shall have the next level of precedence after Enhanced Retransmission mode.

In state 2, a layer above L2CAP requires Enhanced Retransmission mode or Streaming mode. In this case, the required mode takes precedence over all other modes.

A device does not know in which state the remote device is operating so the state 1 precedence algorithm assumes that the remote device may be a state 2 device. If the mode proposed by the remote device has a higher precedence

(according to the state 1 precedence) then the algorithm will operate such that creation of a channel using the remote device's mode has higher priority than disconnecting the channel.

The algorithm for state 1 devices is divided into two parts. Part one covers the case where the remote device proposes a mode with a higher precedence than the state 1 local device. Part two covers the case where the remote device proposes a mode with a lower precedence than the state 1 local device. Part one of the algorithm is as follows:

- When the remote device receives the Configuration Request from the local device it will either reject the local device's Configuration Request by sending a negative Configuration Response or disconnect the channel. The negative Configuration Response will contain the remote device's desired mode.
- Upon receipt of the negative Configuration Response the local device shall either send a second Configuration Request proposing the mode contained in the remote device's negative Configuration Response or disconnect the channel.
- When the local device receives the Configuration Request from the remote device it shall send a positive Configuration Response or disconnect the channel.
- If the mode in the remote Device's negative Configuration Response does not match the mode in the remote device's Configuration Request then the local device shall disconnect the channel.

Part two of the algorithm is as follows:

- When the local device receives the Configuration Request from the remote device it shall reject the Configuration Request by sending a negative Configuration Response proposing its desired mode. The local device's desired mode shall be the same mode it sent in its Configuration Request. Upon receiving the negative Configuration Response the remote device will either send a second Configuration Request or disconnect the channel.
- If the local device receives a second Configuration Request from the remote device that does not contain the desired mode then the local device shall disconnect the channel.
- If the local device receives a negative Configuration Response then it shall disconnect the channel.

An example of the algorithm for state 1 devices is as follows:

- The remote device proposes Basic L2CAP mode in a Configuration Request and the local device proposes Enhanced Retransmission mode or Streaming mode. The remote device rejects the local device's Configuration Request by sending a negative Configuration Response proposing Basic mode. The local device will send a second Configuration Request proposing Basic L2CAP mode or disconnect the channel. If the local device sends a second Configuration Request that does not propose Basic L2CAP mode

then the remote device will disconnect the channel. If the local device rejects the remote device's Configuration Request then the remote device will disconnect the channel.

The algorithm for state 2 devices is as follows:

- If the local device proposes a mode in a Configuration Request and the remote device proposes a different mode or rejects the local device's Configuration Request then the local device shall disconnect the channel.

For Enhanced Retransmission mode and Streaming mode the Retransmission time-out and Monitor Time-out parameters of the Retransmission and Flow Control option parameters may be changed but all other parameters shall not be changed in a subsequent reconfiguration after the channel has reached the OPEN state.

5.5 FRAME CHECK SEQUENCE (FCS) OPTION

This option is used to specify the type of Frame Check Sequence (FCS) that will be included on S/I-Frames that are sent. The FCS option shall only be used when the mode is being, or is already configured to Enhanced Retransmission mode or Streaming mode. Note the FCS option can be reconfigured only when the mode is Enhanced Retransmission mode or Streaming mode. Implementations may reconfigure the FCS when L2CAP channels are moved between Controllers. The Frame Check Sequence option is type 0x05. "No FCS" shall only be used if both L2CAP entities send the FCS Option with value 0x00 (No FCS) in a configuration request. If one L2CAP entity sends the FCS Option with "No FCS" in a configuration request and the other L2CAP sends the FCS Option with a value other than "No FCS" then the default shall be used. If one or both L2CAP entities do not send the FCS option in a configuration request then the default shall be used.

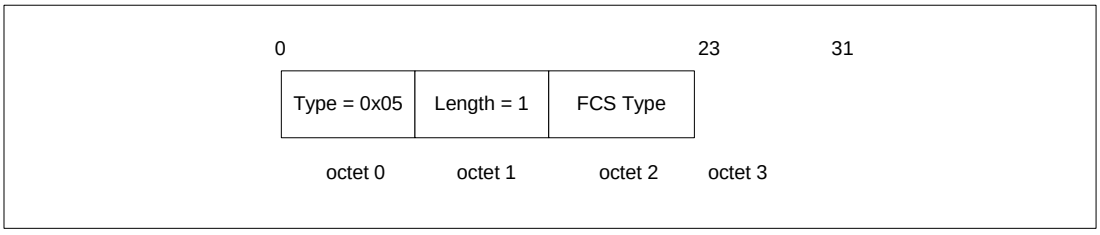

Figure 5.6: FCS option format

The FCS types are shown in Table 5.3

Value	Description
0x00	No FCS
0x01	16-bit FCS defined in section 3.3.5 (default)

Table 5.3: FCS types

Value	Description
0x02 - 0xFF	Reserved

Table 5.3: FCS types

Value of 0x00 is set when the sender wishes to omit the FCS from S/I-Frames.

5.6 EXTENDED FLOW SPECIFICATION OPTION

This option specifies a flow specification for requesting a desired Quality of Service (QoS) on a channel. The Extended Flow Specification shall be supported on all channels created over AMP controller links. Optionally, Extended Flow Specification may be supported on channels created over BR/EDR links (see Section 7.10). If both devices show support for Extended Flow Specification for BR/EDR in the Extended Feature mask (see Table 4.11) then all channels created between the two devices shall use an Extended Flow Specification. The Quality of Service option and Flush Timeout option shall not be used if the Extended Flow Specification is used.

The parameters in the Extended Flow Specification option specify the traffic stream in the outgoing direction (transmitted traffic), with the exception of the Flush Timeout parameter which specifies the desired Flush Timeout that will be used by the remote side when transmitting. Extended Flow Specification option is type 0x06.

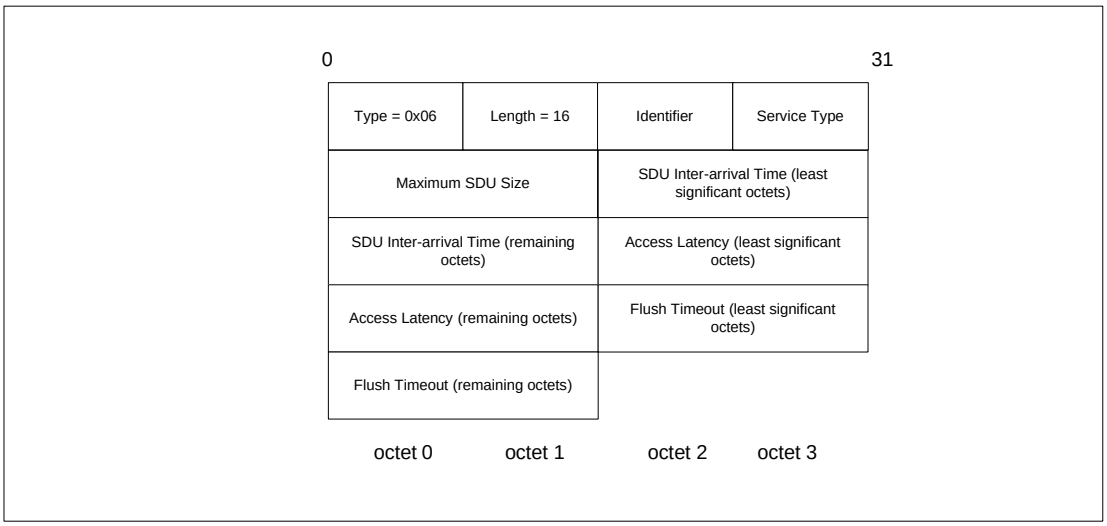

Figure 5.7: Extended Flow Specification option format

If no Extended Flow Specification is provided by the upper layer, an Extended Flow Specification with following default values shall be used:

For a Best Effort channel no latency, air-time or bandwidth guarantees shall be assumed.

Identifier	0x01
Service Type	Best Effort
Maximum SDU size	0xFFFF
SDU Inter-arrival Time	0xFFFFFFFF
Access Latency	0xFFFFFFFF
Flush Timeout	0xFFFFFFFF

The parameters of the Extended Flow Specification are shown in Table 5.4:

QoS parameter	Parameter Size in Octets	Unit
Identifier	1	na
Service Type	1	na
Maximum SDU Size	2	octets
SDU Inter-arrival Time	4	microseconds
Access Latency	4	microseconds
Flush Timeout	4	microseconds

Table 5.4: Traffic parameters for L2CAP QoS configuration

- *Identifer (1 octet)*

  This field provides a unique identifier for the flow specification. This identifier is used by some Controllers in the process of setting up the QoS request. Each active flow specification sent by a device to configure an L2CAP channel shall have a unique Identifier. An Identifier can be reused when the L2CAP channel associated with the flow spec is disconnected. The Identifier shall be unique within the scope of a physical link. Extended Flow Specifications for channels on different physical links may have the same Identifier. The Identifier for an Extended Flow Specification with Service Type Best Effort shall be 0x01.

  Note: Since the Identifier for an Extended Flow Specification with Service Type Best Effort is fixed to 0x01 it is possible to generate a Best Effort Extended Flow Specification for the remote device without performing the Lockstep Configuration process. (The Lockstep Configuration process is described in Section 7.1.3). This allows a Best Effort channel created over the BR/EDR controller without using the Lockstep configuration procedure to be moved to an AMP controller. It is not possible to move a Guaranteed channel created over the BR/EDR controller to an AMP controller unless the Lockstep configuration procedure is used during channel creation. This is because the Identifier for the remote device's Extended Flow Specification with Service Type Guaranteed is not known.

- *Service Type (1 octet)*

This field indicates the level of service required. The default value is 'Best effort'. If 'Best effort' is selected then Access Latency and Flush Timeout shall both be set to 0xFFFFFFFF. Maximum SDU size and SDU Inter-arrival Time are used to indicate the maximum data rate that the application can deliver to L2CAP for transmission. This is useful for high speed Controllers so they do not reserve more bandwidth than the application can deliver. The remote device should respond with lower settings indicating the maximum rate at which it can receive data (for example, maximum rate data it can write to a mass storage device, etc.). Values of 0xFFFF for Maximum SDU size and 0xFFFFFFFF for SDU Inter-arrival time are used when the actual values are not known. If Maximum SDU size is set to 0xFFFF then SDU Inter-arrival time shall be set to 0xFFFFFFFF, if SDU Inter-arrival time is set to 0xFFFFFFFF then Maximum SDU size shall be set to 0xFFFF. This tells the Controller to allocate as much bandwidth as possible.

If "Guaranteed" is selected the QoS parameters can be used to identify different types of Guaranteed traffic.

- **Guaranteed bandwidth** traffic is traffic with a minimum data rate but no particular latency requested. Latency will be related to the link supervision timeout. For this type of traffic Access Latency is set to 0xFFFFFFFF.
- **Guaranteed Latency** traffic is traffic with only latency requirements. For this type of traffic SDU Inter-arrival time is set to 0xFFFFFFFF. HID interrupt channel and AVRCP are examples of this type of traffic.
- **Both Guaranteed Latency and Bandwidth** traffic has both a latency and bandwidth requirement. An example is Audio/Video streaming.

If 'No Traffic' is selected the remainder of the fields shall be ignored because there is no data being sent across the channel in the outgoing direction.

Value	Description
0x00	No Traffic
0x01	Best effort (Default)
0x02	Guaranteed
Other	Reserved

Table 5.5: Traffic parameters for L2CAP QoS configuration

A channel shall not be configured as "Best Effort" in one direction and "Guaranteed" in the other direction. If a channel is configured in this way it shall be disconnected. A channel may be configured as "No Traffic" in one direction and "Best Effort" in the other direction. The "No Traffic" refers to the application traffic not the Enhanced Retransmission mode supervisory traffic. A channel configured in this way is considered to have a service type of Best Effort. A channel may be configured as "No Traffic" in one direction and "Guaranteed" in the other direction. A channel configure in this way is considered to have a service type of Guaranteed.

Once configured the service type of a channel shall not be changed during reconfiguration.

- *Maximum SDU Size (2 octets)*

The Maximum SDU Size parameter specifies the maximum size of the SDUs transmitted by the application. If the Service Type is "Guaranteed" then traffic submitted to L2CAP with a larger size is considered non-conformant. QoS guarantees are only provided for conformant traffic.

- *SDU Inter-arrival time (4 octets)*

The SDU Inter-arrival time parameter specifies the time between consecutive SDUs generated by the application. For streaming traffic, SDU Inter-arrival time should be set to the average time between SDUs. For variable rate traffic and best effort traffic, SDU Inter-arrival time should be set to the minimum time between SDUs. If the Service Type is "Guaranteed" then traffic submitted to L2CAP with a smaller interval, is considered non-conformant. QoS guarantees are only provided for conformant traffic.

- *Access Latency (4 octets)*

The Access Latency parameter specifies the maximum delay between consecutive transmission opportunities on the air-interface for the connection. Note that access latency is based on the time base of the Controller, which may not be synchronous to the time base being used by the host or the application.

For streaming traffic (for example, A2DP), the Access Latency should be set to indicate the time budgeted for transmission of the data over the air, and would normally be roughly equal to the Flush Timeout minus the duration of streaming data which can be stored in the receive side application buffers.

For non-streaming, bursty traffic (i.e. HID and AVRCP), the Access Latency parameter value sent in the L2CAP Configuration Request should be set to the desired latency, minus any HCI transport delays and any other stack delays that may be expected on the device and on target host systems. The remote device receiving the L2CAP Configuration Request may send an Access Latency parameter value in the L2CAP Configuration Response which is equal to or lower than the value it received. The remote device may send a lower value to account for other traffic it may be carrying, or overhead activities it may be carrying out.

If HCI is used then the host should take into account the latency of the HCI transport when determining the value for the Access Latency. For example if the application requires an Access Latency of 20ms and the HCI transport has a latency of 5 ms then the value for Access Latency should be 15ms.

- *Flush Timeout (4 Octets)*

The Flush Timeout defines a maximum period after which all segments of the SDU are flushed from L2CAP and the Controller. A Flush Timeout value of 0xFFFFFFFF indicates that data will not be discarded by the transmitting side,

even if the link becomes congested. Note that in this case data is treated as reliable, and is never flushed. The device receiving the L2CAP Configuration Request with Flush Timeout set to 0xFFFFFFFF should not modify this parameter. The Flush Timeout for a "Best Effort" channel shall be set to 0xFFFFFFFF.

However, if the Traffic Type is "Guaranteed" and the transmit side buffer is limited, then the Flush Timeout parameter given in the L2CAP Configuration Request may be set to a value corresponding to the duration of streaming data which the transmit buffer can hold before it must begin discarding data. The side receiving the L2CAP Configuration Request may then set the Flush Timeout parameter in the L2CAP Configuration Response to a lower value if the receive side buffer is smaller than the transmit side buffer. Note that the total available buffer space is typically a combination of application buffers, any buffers maintained by the L2CAP implementation, and HCI buffers provided by the Controller.

The Flush Timeout should normally be set to a value which is larger than the Access Latency, and which also accounts for buffers maintained by the application on the receive side such as de-jitter buffers used in audio and video streaming applications. In general, the Flush Timeout value should be selected to ensure that the Flush Timeout expires when the application buffers are about to be exhausted.

Flush Timeout may be set to 0x00000000 to indicate that no retransmissions are to occur. Data may be flushed immediately after transmission in this case. This behavior is useful in applications such as gaming where the tolerable latency is on the order of a few milliseconds, and hence the information contained in a packet will become stale very rapidly. In such applications, it is preferable to send "fresher" data if the last SDU submitted for transmission was not transmitted as a result of interference.

5.7 EXTENDED WINDOW SIZE OPTION

This option is used to negotiate the maximum extended window size. The Extended Window Size option is type 0x07.

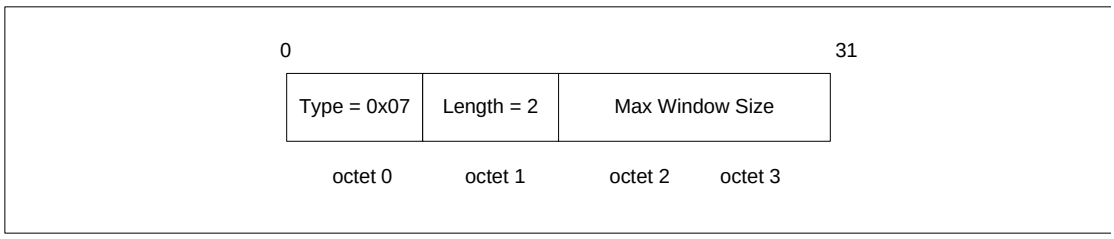

Figure 5.8: Extended Window Size option format

The allowable values for the Maximum Extended Window Size are:

Value	Description
0x0000	Invalid value for Enhanced Retransmission mode Valid for Streaming mode
0x0001-0x3FFF	Valid maximum window size (frames) for Enhanced Retransmission mode. Invalid for Streaming mode
0x4000 -0xFFFF	Reserved

Figure 5.9: Extended Window Size values

This option shall only be sent if the peer L2CAP entity has indicated support for the Extended Window size feature in the Extended Features Mask (see Section 4.11).

This option shall be ignored if the channel is configured to use Basic L2CAP Mode (see Section 5.4).

For Enhanced Retransmission mode, this option has the same directional semantics as the Retransmission and Flow Control option (see Section 5.4). The sender of a Configuration Request command containing this option is suggesting the maximum window size (possibly based on its own internal L2CAP receive buffer resources) that the peer L2CAP entity should use when sending data.

For Streaming mode, this option is used to enable use of the Extended Control Field and if sent, shall have a value of 0.

If this option is successfully configured then the Maximum Window Size negotiated using the Retransmission and Flow Control option (see Section 5.4) shall be ignored.

If this option is successfully configured in either direction then both L2CAP entities shall use the Extended Control Fields in all S/I-Frames (see Section 3.3.2).

If the option is only configured in one direction then the maximum window size for the opposite direction shall be taken from the maximum window size value in the existing Retransmission and Flow Control option. In this configuration both L2CAP entities shall use the extended control fields in all S/I-Frames.

6 STATE MACHINE

This section is informative. The state machine may not represent all possible scenarios.

6.1 GENERAL RULES FOR THE STATE MACHINE:

- It is implementation specific, and outside the scope of this specification, how the transmissions are triggered.
- "Ignore" means that the signal can be silently discarded.

The following states have been defined to clarify the protocol; the actual number of states and naming in a given implementation is outside the scope of this specification:

- CLOSED – channel not connected.
- WAIT_CONNECT – a connection request has been received, but only a connection response with indication “pending” can be sent.
- WAIT_CONNECT_RSP – a connection request has been sent, pending a positive connect response.
- CONFIG – the different options are being negotiated for both sides; this state comprises a number of substates, see Section 6.1.3 on page 95
- OPEN – user data transfer state.
- WAIT_DISCONNECT – a disconnect request has been sent, pending a disconnect response.
- WAIT_CREATE – a channel creation request has been received, but only a response with indication "pending" can be sent. This state is similar to WAIT_CONNECT.
- WAIT_CREATE_RSP – a channel creation request has been sent, pending a channel creation response. This state is similar to WAIT_CONNECT_RSP.
- WAIT_MOVE – a request to move the current channel to another Controller has been received, but only a response with indication "pending" can be sent.
- WAIT_MOVE_RSP – a request to move a channel to another Controller has been sent, pending a move response
- WAIT_MOVE_CONFIRM – a response to the move channel request has been sent, waiting for a confirmation of the move operation by the initiator side
- WAIT_CONFIRM_RSP – a move channel confirm has been sent, waiting for a move channel confirm response.

In the following state tables and descriptions, the L2CAP_Data message corresponds to one of the PDU formats used on connection-oriented data channels as described in section 3, including PDUs containing B-frames, I-frames, S-frames.

Some state transitions and actions are triggered only by internal events effecting one of the L2CAP entity implementations, not by preceding L2CAP signaling messages. It is implementation-specific and out of the scope of this specification, how these internal events are realized; just for the clarity of specifying the state machine, the following abstract internal events are used in the state event tables, as far as needed:

- *OpenChannel_Req* – a local L2CAP entity is requested to set up a new connection-oriented channel.
- *OpenChannel_Rsp* – a local L2CAP entity is rquested to finally accept or refuse a pending connection request.
- *ConfigureChannel_Req* – a local L2CAP entity is requested to initiate an outgoing configuration request.
- *CloseChannel_Req* – a local L2CAP entity is requesed to close a channel.
- *SendData_Req* – a local L2CAP entity is requested to transmit an SDU.
- *ReconfigureChannel_Req* – a local L2CAP entity is requested to reconfigure the parameters of a connection-oriented channel.
- *OpenChannelCntrl_Req* – a local L2CAP entity is requested to set up a new connection over a Controller identified by a Controller ID.
- *OpenChannelCntrl_Rsp* – a local L2CAP entity is requested to internally accept or refuse a pending connection over a Controller identified by a Controller ID.
- *MoveChannel_Req* – a local L2CAP entity is requested to move the current channel to another Controller.
- *ControllerLogicalLinkInd* – a Controller indicates the acceptance or rejection of a logical link request with an Extended Flow Specification.

There is a single state machine for each L2CAP connection-oriented channel that is active. A state machine is created for each new L2CAP_ConnectReq received. The state machine always starts in the CLOSED state.

To simplify the state event tables, the RTX and ERTX timers, as well as the handling of request retransmissions are described in Section 6.1.7 on page 103 and not included in the state tables.

L2CAP messages not bound to a specific data channel and thus not impacting a channel state (e.g. L2CAP_InformationReq, L2CAP_EchoReq) are not covered in this section.

The following states and transitions are illustrated in Figure 6.1 on page 110.

6.1.1 CLOSED state

Notes:

- The L2CAP_ConnectReq message is not mentioned in any of the other states apart from the CLOSED state, as it triggers the establishment of a new channel, thus the branch into a new instance of the state machine.

Event	Condition	Action	Next State
OpenChannel_req	-	Send L2CAP_ConnectReq	WAIT_CONNECT_RSP
L2CAP_ConnectReq	Normal, connection is possible	Send L2CAP_ConnectRsp (success)	CONFIG (substate WAIT_CONFIG)
L2CAP_ConnectReq	Need to indicate pending	Send L2CAP_ConnectRsp (pending)	WAIT_CONNECT
L2CAP_ConnectReq	No resource, not approved, etc.	Send L2CAP_ConnectRsp (refused)	CLOSED
L2CAP_ConnectRsp	-	Ignore	CLOSED
L2CAP_ConfigReq	-	Send L2CAP_CommandReject (with reason Invalid CID)	CLOSED
L2CAP_ConfigRsp	-	Ignore	CLOSED
L2CAP_DisconnectReq	-	Send L2CAP_DisconnectRsp	CLOSED
L2CAP_DisconnectRsp	-	Ignore	CLOSED
L2CAP_Data	-	Ignore	CLOSED
OpenChannelCntrl_Req		Send L2CAP_CreateChanReq	WAIT_CREATE_RSP
L2CAP_CreateChanReq	Normal, connection is possible	Send L2CAP_CreateChanRsp (success)	CONFIG
L2CAP_CreateChanReq	Need to indicate pending	Send L2CAP_CreateChanRsp (pending)	WAIT_CREATE
L2CAP_CreateChanReq	No resource, not approved	Send L2CAP_CreateChanRsp (refused)	CLOSED
L2CAP_CreateChanRsp		Ignore	CLOSED
L2CAP_MoveChanReq		Ignore	CLOSED
L2CAP_MoveChanRsp		Ignore	CLOSED
L2CAP_MoveChanConfirm		Ignore	CLOSED
L2CAP_MoveChanConfirmRsp		Ignore	CLOSED

Table 6.1: CLOSED state event table.

6.1.2 WAIT_CONNECT_RSP state

Event	Condition	Action	Next State
L2CAP_ConnectRsp	Success indicated in result	Send L2CAP_ConfigReq	CONFIG (substate WAIT_CONFIG)
L2CAP_ConnectRsp	Result pending	-	WAIT_CONNECT_RSP
L2CAP_ConnectRsp	Remote side refuses connection	-	CLOSED
L2CAP_ConfigReq	-	Send L2CAP_CommandReject (with reason Invalid CID)	WAIT_CONNECT_RSP
L2CAP_ConfigRsp	-	Ignore	WAIT_CONNECT_RSP
L2CAP_DisconnectRsp	-	Ignore	WAIT_CONNECT_RSP
L2CAP_Data	-	Ignore	WAIT_CONNECT_RSP
L2CAP_CreateChanReq		Ignore	WAIT_CONNECT_RSP
L2CAP_CreateChanRsp		Ignore	WAIT_CONNECT_RSP
L2CAP_MoveChanReq		Ignore	WAIT_CONNECT_RSP
L2CAP_MoveChanRsp		Ignore	WAIT_CONNECT_RSP
L2CAP_MoveChanConfirm		Ignore	WAIT_CONNECT_RSP
L2CAP_MoveChanConfirmRsp		Ignore	WAIT_CONNECT_RSP

Table 6.2: WAIT_CONNECT_RSP state event table.

Notes:

- An L2CAP_DisconnectReq message is not included here, since the Source and Destination CIDs are not available yet to relate it correctly to the state machine of a specific channel.

6.1.3 WAIT_CONNECT state

Event	Condition	Action	Next State
OpenChannel_Rsp	Pending connection request is finally acceptable	Send L2CAP_Connect_Rsp (success)	CONFIG (substate WAIT_CONFIG)
OpenChannel_Rsp	Pending connection request is finally refused	Send L2CAP_Connect_Rsp (refused)	CLOSED
L2CAP_ConnectRsp	-	Ignore	WAIT_CONNECT
L2CAP_ConfigRsp	-	Ignore	WAIT_CONNECT
L2CAP_DisconnectRsp	-	Ignore	WAIT_CONNECT
L2CAP_Data	-	Ignore	WAIT_CONNECT
L2CAP_ CreateChanReq		Ignore	WAIT_CONNECT
L2CAP_ CreateChanRsp		Ignore	WAIT_CONNECT
L2CAP_MoveChanReq		Ignore	WAIT_CONNECT
L2CAP_MoveChanRsp		Ignore	WAIT_CONNECT
L2CAP_ MoveChanConfirm		Ignore	WAIT_CONNECT
L2CAP_ MoveChanConfirmRsp		Ignore	WAIT_CONNECT

Table 6.3: WAIT_CONNECT state event table.

Notes:

- An L2CAP_DisconnectReq or L2CAP_ConfigReq message is not included here, since the Source and Destination CIDs are not available yet to relate it correctly to the state machine of a specific channel.

6.1.4 CONFIG state

Two configuration processes exist as described in Section 7.1 on page 113. The configuration processes are the Standard process and the Lockstep process.

In the Standard and Lockstep configuration processes both L2CAP entities initiate a configuration request during the configuration process. This means that each device adopts an initiator role for the outgoing configuration request, and an acceptor role for the incoming configuration request. Configurations in both directions may occur sequentially, but can also occur in parallel.

In the Lockstep configuration process both L2CAP entities send Configuration Request packets and receive Configuration Response packets with a pending result code before submitting the flow specifications to their local controllers. A final Configuration Response packet is sent by each L2CAP entity indicating the response from its local controller.

The following substates are distinguished within the CONFIG state:

- WAIT_CONFIG – a device has sent or received a connection response, but has neither initiated a configuration request yet, nor received a configuration request with acceptable parameters.
- WAIT_SEND_CONFIG – for the initiator path, a configuration request has not yet been initiated, while for the response path, a request with acceptable options has been received.
- WAIT_CONFIG_REQ_RSP – for the initiator path, a request has been sent but a positive response has not yet been received, and for the acceptor path, a request with acceptable options has not yet been received.
- WAIT_CONFIG_RSP – the acceptor path is complete after having responded to acceptable options, but for the initiator path, a positive response on the recent request has not yet been received.
- WAIT_CONFIG_REQ – the initiator path is complete after having received a positive response, but for the acceptor path, a request with acceptable options has not yet been received.
- WAIT_IND_FINAL_RSP – for both the initiator and acceptor, the Extended Flow Specification has been sent to the local controller but neither a response from controller nor the final configuration response has yet been received.
- WAIT_FINAL_RSP – the device received an indication from the Controller accepting the Extended Flow Specification and has sent a positive response. It is waiting for the remote device to send a configuration response.
- WAIT_CONTROL_IND – the device has received a positive response and is waiting for its Controller to accept or reject the Extended Flow Specification.

According to Section 6.1.1 on page 92 and Section 6.1.2 on page 94, the CONFIG state is entered via WAIT_CONFIG substate from either the CLOSED state, the WAIT_CONNECT state, or the WAIT_CONNECT_RSP state. The CONFIG state is left for the OPEN state if both the initiator and acceptor paths complete successfully.

For better overview, separate tables are given: Table 6.4 shows the success transitions; therein, transitions on one of the minimum paths (no previous non-success transitions) are shaded. Table 6.5 on page 98 shows the non-success transitions within the configuration process, and Table 6.6 on page 99 shows further transition cause by events not belonging to the configuration process itself. The following configuration states and transitions are illustrated in Figure 6.2 on page 111.

Previous state	Event	Condition	Action	Next State
WAIT_CONFIG	*ConfigureChannel_Req*	Standard process	Send L2CAP_Config Req	WAIT_CONFIG_REQ_RSP
WAIT_CONFIG	*ConfigureChannel_Req*	Lockstep process	Send L2CAP_Config Req (Ext Flow Spec plus other options)	WAIT_CONFIG_REQ_RSP
WAIT_CONFIG	L2CAP_ConfigReq	Options acceptable Standard process	Send L2CAP_Config Rsp (success)	WAIT_SEND_CONFIG
WAIT_CONFIG	L2CAP_ConfigReq	Options acceptable Lockstep process	Send L2CAP_Config Rsp (pending)	WAIT_SEND_CONFIG
WAIT_CONFIG_REQ_RSP	L2CAP_ConfigReq	Options acceptable	Send L2CAP_Config Rsp (success)	WAIT_CONFIG_RSP
WAIT_CONFIG_REQ_RSP	L2CAP_ConfigRsp	Remote side accepts options	- (continue waiting for configuration request)	WAIT_CONFIG_REQ
WAIT_CONFIG_REQ	L2CAP_ConfigReq	Options acceptable Standard process	Send L2CAP_Config Rsp (success)	OPEN
WAIT_CONFIG_REQ	L2CAP_ConfigReq	Options acceptable Lockstep process	Send L2CAP_Config Rsp (pending)	WAIT_IND_FINAL_RSP
WAIT_SEND_CONFIG	*ConfigureChannel_Req*	-	Send L2CAP_Config Req	WAIT_CONFIG_RSP

Table 6.4: CONFIG state/substates event table: success transitions within configuration process.

Previous state	Event	Condition	Action	Next State
WAIT_CONFIG_RSP	L2CAP_ConfigRsp	Remote side accepts options Standard proc	-	OPEN
WAIT_CONFIG_RSP_	L2CAP_ConfigRsp	Remote side accepts option Lockstep proc		WAIT_IND_FINAL_RSP
WAIT_IND_FINAL_RSP	ControllerLogicalLinkInd	Reject	Send L2CAP_ConfigRsp (fail)	WAIT_CONFIG
WAIT_IND_FINAL_RSP	ControllerLogicalLinkInd	Accept	Send L2CAP_ConfigRsp (success)	WAIT_FINAL_RSP
WAIT_IND_FINAL_RSP	L2CAP_ConfigRsp	Remote side fail		WAIT_CONFIG
WAIT_IND_FINAL_RSP	L2CAP_ConfigRsp	Remote side success		WAIT_CONTROL_IND
WAIT_FINAL_RSP	L2CAP_ConfigRsp	Remote side fail		WAIT_CONFIG
WAIT_FINAL_RSP	L2CAP_ConfigRsp	Remote side success		OPEN
WAIT_CONTROL_IND	ControllerLogicalLinkInd	Reject	Send L2CAP_ConfigRsp (fail)	WAIT_CONFIG
WAIT_CONTROL_IND	ControllerLogicalLinkInd	Accept	Send L2CAP_ConfigRsp (success)	OPEN

Table 6.4: CONFIG state/substates event table: success transitions within configuration process.

Previous state	Event	Condition	Action	Next State
WAIT_CONFIG	L2CAP_ConfigReq	Options not acceptable	Send L2CAP_ConfigRsp (fail)	WAIT_CONFIG
WAIT_CONFIG	L2CAP_ConfigRsp	-	Ignore	WAIT_CONFIG

Table 6.5: CONFIG state/substates event table: non-success transitions within configuration process.

Previous state	Event	Condition	Action	Next State
WAIT_SEND _CONFIG	L2CAP_ConfigRsp	-	Ignore	WAIT_SEND _CONFIG
WAIT_CONFIG _REQ_RSP	L2CAP_ConfigReq	Options not acceptable	Send L2CAP_Config Rsp (fail)	WAIT_CONFIG _REQ_RSP
WAIT_CONFIG _REQ_RSP	L2CAP_ConfigRsp	Remote side rejects options	Send L2CAP_Config Req (new options)	WAIT_CONFIG _REQ_RSP
WAIT_CONFIG _REQ	L2CAP_ConfigReq	Options not acceptable	Send L2CAP_Config Rsp (fail)	WAIT_CONFIG _REQ
WAIT_CONFIG _REQ	L2CAP_ConfigRsp	-	Ignore	WAIT_CONFIG _REQ
WAIT_CONFIG _RSP	L2CAP_ConfigRsp	Remote side rejects options	Send L2CAP_Config Req (new options)	WAIT_CONFIG _RSP

Table 6.5: CONFIG state/substates event table: non-success transitions within configuration process.

Previous state	Event	Condition	Action	Next State
CONFIG (any substate)	*CloseChannel_Req*	Any internal reason to stop	Send L2CAP_ Disconnect Req	WAIT_ DISCONNECT
CONFIG (any substate)	L2CAP_Disconnect Req	-	Send L2CAP_ Disconnect Rsp	CLOSED
CONFIG (any substate)	L2CAP_Disconnect Rsp	-	Ignore	CONFIG (remain in sub-state)
CONFIG (any substate)	L2CAP_Data	-	Process the PDU	CONFIG (remain in sub-state)
CONFIG (any substate)	L2CAP_ CreateChanReq		Ignore	CONFIG (remain in sub-state)
CONFIG (any substate)	L2CAP_ CreateChanRsp		Ignore	CONFIG (remain in sub-state)

Table 6.6: CONFIG state/substates event table: events not related to configuration process.

Previous state	Event	Condition	Action	Next State
CONFIG (any substate)	L2CAP_ MoveChanReq		Ignore	CONFIG (remain in sub-state)
CONFIG (any substate)	L2CAP_ MoveChanRsp		Ignore	CONFIG (remain in sub-state)
CONFIG (any substate)	L2CAP_ MoveChanConfirm		Ignore	CONFIG (remain in sub-state)
CONFIG (any substate)	L2CAP_ MoveChanCon-firmRsp		Ignore	CONFIG (remain in sub-state)

Table 6.6: CONFIG state/substates event table: events not related to configuration process.

Notes:

- Receiving data PDUs (L2CAP_Data) in CONFIG state should be relevant only in case of a transition to a reconfiguration procedure (from OPEN state). Discarding the received data is allowed only in Retransmission Mode and Enhanced Retransmission Mode. Discarding an S-frame is allowed but not recommended. If a S-frame is discarded, the monitor timer will cause a new S-frame to be sent after a time out.
- Indicating a failure in a configuration response does not necessarily imply a failure of the overall configuration procedure; instead, based on the information received in the negative response, a modified configuration request may be triggered.

6.1.5 OPEN state

Event	Condition	Action	Next State
SendData_req	-	Send L2CAP_Data packet according to configured mode	OPEN
ReconfigureChannel_req	-	Complete outgoing SDU Send L2CAP_ConfigReq	CONFIG (substate WAIT_CONFIG_RSP)
CloseChannel_req	-	Send L2CAP_DisconnectReq	WAIT_DISCONNECT
L2CAP_ConnectRsp	-	Ignore	OPEN
L2CAP_ConfigReq	Incoming config. options acceptable	Complete outgoing SDU Send L2CAP_ConfigRsp (ok)	CONFIG (substate WAIT_CONFIG_REQ)
L2CAP_ConfigReq	Incoming config. options not acceptable	Complete outgoing SDU Send L2CAP_ConfigRsp (fail)	OPEN
L2CAP_DisconnectReq	-	Send L2CAP_DisconnectRsp	CLOSED
L2CAP_DisconnectRsp	-	Ignore	OPEN
L2CAP_Data	-	Process the PDU	OPEN
MoveChannel_Req		Send L2CAP_MoveChanReq	WAIT_MOVE_RSP
L2CAP_CreateChanReq		Ignore	OPEN
L2CAP_CreateChanRsp		Ignore	OPEN
L2CAP_MoveChanReq	Logical Link create/modify is not needed	Send L2CAP_MoveChanRsp (success)	WAIT_MOVE_CONFIRM
L2CAP_MoveChanReq	Need to indicate pending (logical link create/modify is needed)	Send L2CAP_MoveChanRsp (pending)	WAIT_MOVE
L2CAP_MoveChanReq	No resource, not approved	Send L2CAP_MoveChanRsp (refused)	WAIT_MOVE_CONFIRM
L2CAP_MoveChanRsp		Ignore	OPEN

Table 6.7: OPEN state event table.

Event	Condition	Action	Next State
L2CAP_ MoveChanConfirm		Ignore	OPEN
L2CAP_ MoveChanConfirmRsp		Ignore	OPEN

Table 6.7: OPEN state event table.

Note: The outgoing SDU shall be completed from the view of the remote entity. Therefore all PDUs forming the SDU shall have been reliably transmitted by the local entity and acknowledged by the remote entity, before entering the configuration state.

6.1.6 WAIT_DISCONNECT state

Event	Condition	Action	Next State
L2CAP_ConnectRsp	-	Ignore	WAIT_DISCONNECT
L2CAP_ConfigReq	-	Send L2CAP_CommandReject with reason Invalid CID	WAIT_DISCONNECT
L2CAP_ConfigRsp	-	Ignore	WAIT_DISCONNECT
L2CAP_DisconnectReq	-	Send L2CAP_DisconnectRsp	CLOSED
L2CAP_DisconnectRsp	-	-	CLOSED
L2CAP_Data	-	Ignore	WAIT_DISCONNECT
L2CAP_ CreateChanReq		Ignore	WAIT_DISCONNECT
L2CAP_ CreateChanRsp		Ignore	WAIT_DISCONNECT
L2CAP_MoveChanReq		Ignore	WAIT_DISCONNECT
L2CAP_MoveChanRsp		Ignore	WAIT_DISCONNECT
L2CAP_MoveChanConfirm		Ignore	WAIT_DISCONNECT
L2CAP_MoveChanConfirmRsp		Ignore	WAIT_DISCONNECT

Table 6.8: WAIT_DISCONNECT state event table.

6.1.7 WAIT_CREATE_RSP state

Event	Condition	Action	Next State
L2CAP_CreateChanReq		Ignore	WAIT_CREATE_RSP
L2CAP_CreateChanRsp	Success indicated in result	Send L2CAP_ConfigReq	CONFIG (substate WAIT_CONFIG)
L2CAP_CreateChanRsp	Result pending		WAIT_CREATE_RSP
L2CAP_CreateChanRsp	Remote side refuses connection		CLOSED
L2CAP_MoveChanReq		Ignore	WAIT_CREATE_RSP
L2CAP_MoveChanRsp		Ignore	WAIT_CREATE_RSP
L2CAP_MoveChanConfirm		Ignore	WAIT_CREATE_RSP
L2CAP_ MoveChanConfirmRsp		Ignore	WAIT_CREATE_RSP

Table 6.9: WAIT_CREATE_RSP state event table.

6.1.8 WAIT_CREATE state

Event	Condition	Action	Next State
OpenChannelCntrl_Req	-	Ignore	WAIT_CREATE
OpenChannelCntrl_Rsp	Pending connection request is finally acceptable	Send L2CAP_ CreateChanRsp (success)	CONFIG
OpenChannelCntrl_Rsp	Pending connection request is finally refused	Send L2CAP_ CreateChanRsp (refused)	CLOSED
L2CAP_CreateChanReq	-	Ignore	WAIT_CREATE
L2CAP_CreateChanRsp	-	Ignore	WAIT_CREATE
L2CAP_MoveChanReq	-	Ignore	WAIT_CREATE
L2CAP_MoveChanRsp	-	Ignore	WAIT_CREATE
L2CAP_ MoveChanConfirm	-	Ignore	WAIT_CREATE
L2CAP_ MoveChanConfirmRsp	-	Ignore	WAIT_CREATE

Table 6.10: WAIT_CREATE state event table

6.1.9 WAIT_MOVE_RSP state

Event	Condition	Action	Next State
L2CAP_MoveChanReq	Prioritization algorithm (remain initiator)	Send L2CAP_MoveChanRsp (collision)	WAIT_MOVE_RSP
L2CAP_MoveChanReq	Prioritization algorithm (become responder) and logical link create/modify is needed)	Send L2CAP_MoveChanRsp (pending)	WAIT_MOVE
L2CAP_MoveChanReq	Prioritization algorithm (become responder) and logical link create/modify is not needed)	Send L2CAP_MoveChanRsp (success)	WAIT_MOVE_CONFIRM
L2CAP_CreateChanRsp	-	Ignore	WAIT_MOVE_RSP
L2CAP_CreateChanReq	-	Ignore	WAIT_MOVE_RSP
L2CAP_MoveChanRsp	Result pending	-	WAIT_MOVE_RSP
L2CAP_MoveChanRsp	Remote side refuses move and/or local side refuses move (create/modify logical link fails)	Send L2CAP_MoveChanConfirm (failure)	WAIT_CONFIRM_RSP
L2CAP_MoveChanRsp	Both remote side and local side accepts move (create/modify logical link succeeds)	Send L2CAP_MoveChanConfirm (success)	WAIT_CONFIRM_RSP
L2CAP_MoveChanConfirm	-	Ignore	WAIT_MOVE_RSP

Table 6.11: WAIT_MOVE_RSP state event table

Event	Condition	Action	Next State
L2CAP_ MoveChanConfirmRsp	-	Ignore	WAIT_MOVE_RSP

Table 6.11: WAIT_MOVE_RSP state event table

6.1.10 WAIT_MOVE state

Event	Condition	Action	Next State
ControllerLogicalLinkInd	Create/modify logical link completed successfully	Send L2CAP_MoveChanRsp (success)	WAIT_MOVE_CONFIRM
ControllerLogicalLinkInd	Create/modify logical link completed with failure	Send L2CAP_MoveChanRsp (refused)	WAIT_MOVE_CONFIRM
L2CAP_CreateChanReq	-	Ignore	WAIT_MOVE
L2CAP_CreateChanRsp	-	Ignore	WAIT_MOVE
L2CAP_MoveChanReq	-	Ignore	WAIT_MOVE
L2CAP_MoveChanRsp	-	Ignore	WAIT_MOVE
L2CAP_MoveChanConfirm	-	Ignore	WAIT_MOVE
L2CAP_MoveChanConfirmRsp	-	Ignore	WAIT_MOVE

Table 6.12: WAIT_MOVE state event table

6.1.11 WAIT_MOVE_CONFIRM state

Event	Condition	Action	Next State
L2CAP_CreateChanReq	-	Ignore	WAIT_MOVE_CONFIRM
L2CAP_CreateChanRsp	-	Ignore	WAIT_MOVE_CONFIRM
L2CAP_MoveChanReq	-	Ignore	WAIT_MOVE_CONFIRM
L2CAP_MoveChanRsp	-	Ignore	WAIT_MOVE_CONFIRM
L2CAP_MoveChanConfirm	Result of move is success	Send L2CAP_MoveChanConfirmRsp	OPEN (on new Controller)
L2CAP_MoveChanConfirm	Result of move is failure	Send L2CAP_MoveChanConfirmRsp	OPEN (on old Controller)
L2CAP_MoveChanConfirmRsp	-	Ignore	WAIT_MOVE_CONFIRM

Table 6.13: WAIT_MOVE_CONFIRM state event table

6.1.12 WAIT_CONFIRM_RSP state

Event	Condition	Action	Next State
L2CAP_CreateChanReq	-	Ignore	WAIT_CONFIRM_RSP
L2CAP_CreateChanRsp	-	Ignore	WAIT_CONFIRM_RSP
L2CAP_MoveChanReq	-	Ignore	WAIT_CONFIRM_RSP
L2CAP_MoveChanRsp	-	Ignore	WAIT_CONFIRM_RSP
L2CAP_MoveChanConfirm	-	Ignore	WAIT_CONFIRM_RSP
L2CAP_MoveChanConfirmRsp	Move succeeded		OPEN (on new Controller)
L2CAP_MoveChanConfirmRsp	Move failed		OPEN (on old Controller)

Table 6.14: WAIT_CONFIRM_RSP state event table

6.2 TIMERS EVENTS

6.2.1 RTX

The Response Timeout eXpired (RTX) timer is used to terminate the channel when the remote endpoint is unresponsive to signaling requests. This timer is started when a signaling request (see Section 7 on page 113) is sent to the remote device. This timer is disabled when the response is received. If the ini-

tial timer expires, a duplicate Request message may be sent or the channel identified in the request may be disconnected. If a duplicate Request message is sent, the RTX timeout value shall be reset to a new value at least double the previous value. When retransmitting the Request message, the context of the same state shall be assumed as with the original transmission. If a Request message is received that is identified as a duplicate (retransmission), it shall be processed in the context of the same state which applied when the original Request message was received.

Implementations have the responsibility to decide on the maximum number of Request retransmissions performed at the L2CAP level before terminating the channel identified by the Requests. The one exception is the signaling CID that should never be terminated. The decision should be based on the flush timeout of the signaling link. The longer the flush timeout, the more retransmissions may be performed at the physical layer and the reliability of the channel improves, requiring fewer retransmissions at the L2CAP level.

For example, if the flush timeout is infinite, no retransmissions should be performed at the L2CAP level. When terminating the channel, it is not necessary to send a L2CAP_DisconnectReq and enter WAIT_DISCONNECT state. Channels can be transitioned directly to the CLOSED state.

The value of this timer is implementation-dependent but the minimum initial value is 1 second and the maximum initial value is 60 seconds. One RTX timer shall exist for each outstanding signaling request, including each Echo Request. The timer disappears on the final expiration, when the response is received, or the physical link is lost. The maximum elapsed time between the initial start of this timer and the initiation of channel termination (if no response is received) is 60 seconds.

6.2.2 ERTX

The Extended Response Timeout eXpired (ERTX) timer is used in place of the RTX timer when it is suspected the remote endpoint is performing additional processing of a request signal. This timer is started when the remote endpoint responds that a request is pending, e.g., when an L2CAP_ConnectRsp event with a "connect pending" result (0x0001) is received. This timer is disabled when the formal response is received or the physical link is lost. If the initial timer expires, a duplicate Request may be sent or the channel may be disconnected.

If a duplicate Request is sent, the particular ERTX timer disappears, replaced by a new RTX timer and the whole timing procedure restarts as described previously for the RTX timer.

The value of this timer is implementation-dependent but the minimum initial value is 60 seconds and the maximum initial value is 300 seconds. Similar to RTX, there MUST be at least one ERTX timer for each outstanding request that received a Pending response. There should be at most one (RTX or ERTX) associated with each outstanding request. The maximum elapsed time between the initial start of this timer and the initiation of channel termination (if no response is received) is 300 seconds. When terminating the channel, it is not necessary to send a L2CAP_DisconnectReq and enter WAIT_DISCONNECT state. Channels should be transitioned directly to the CLOSED state.

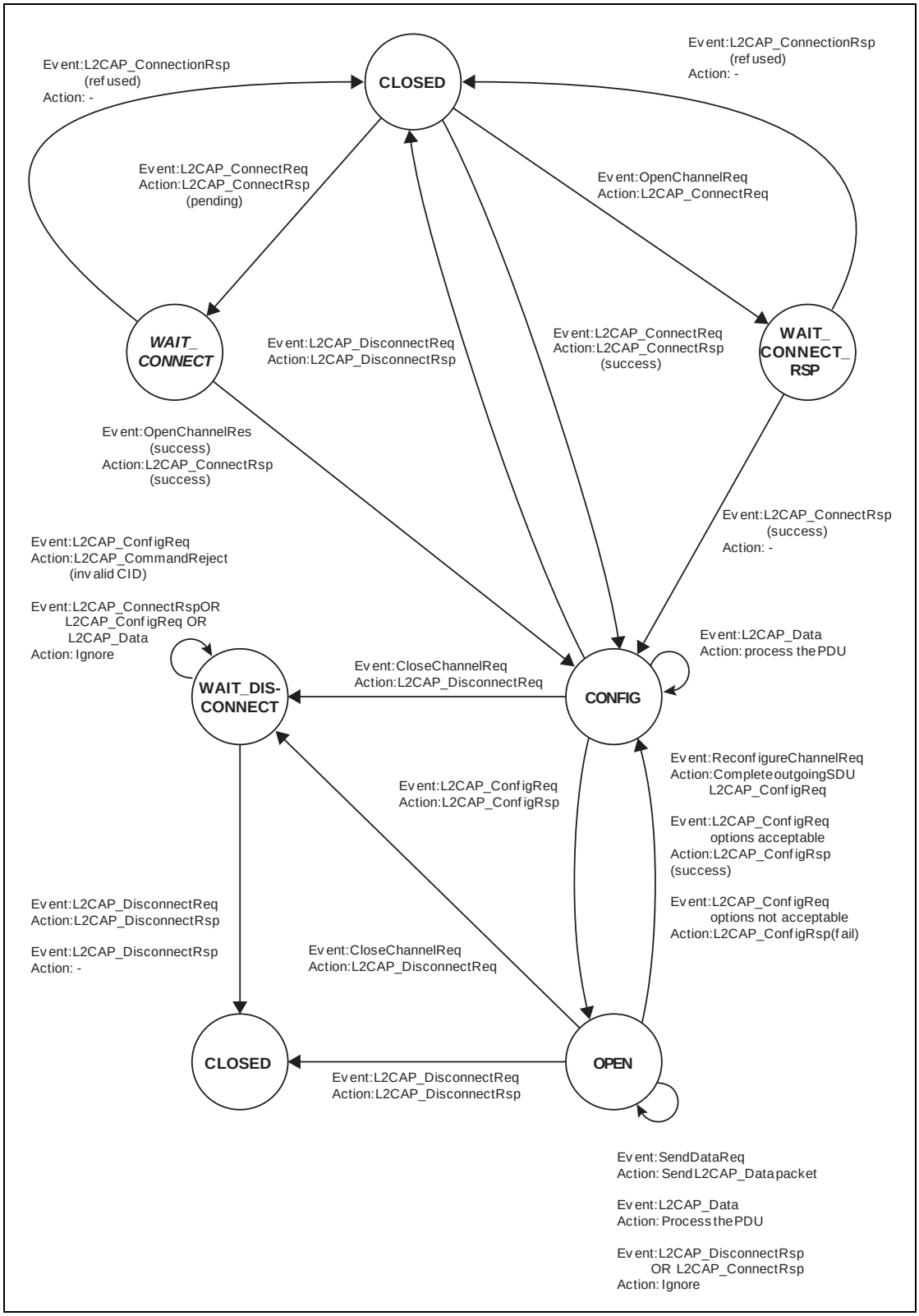

Figure 6.1: States and transitions.

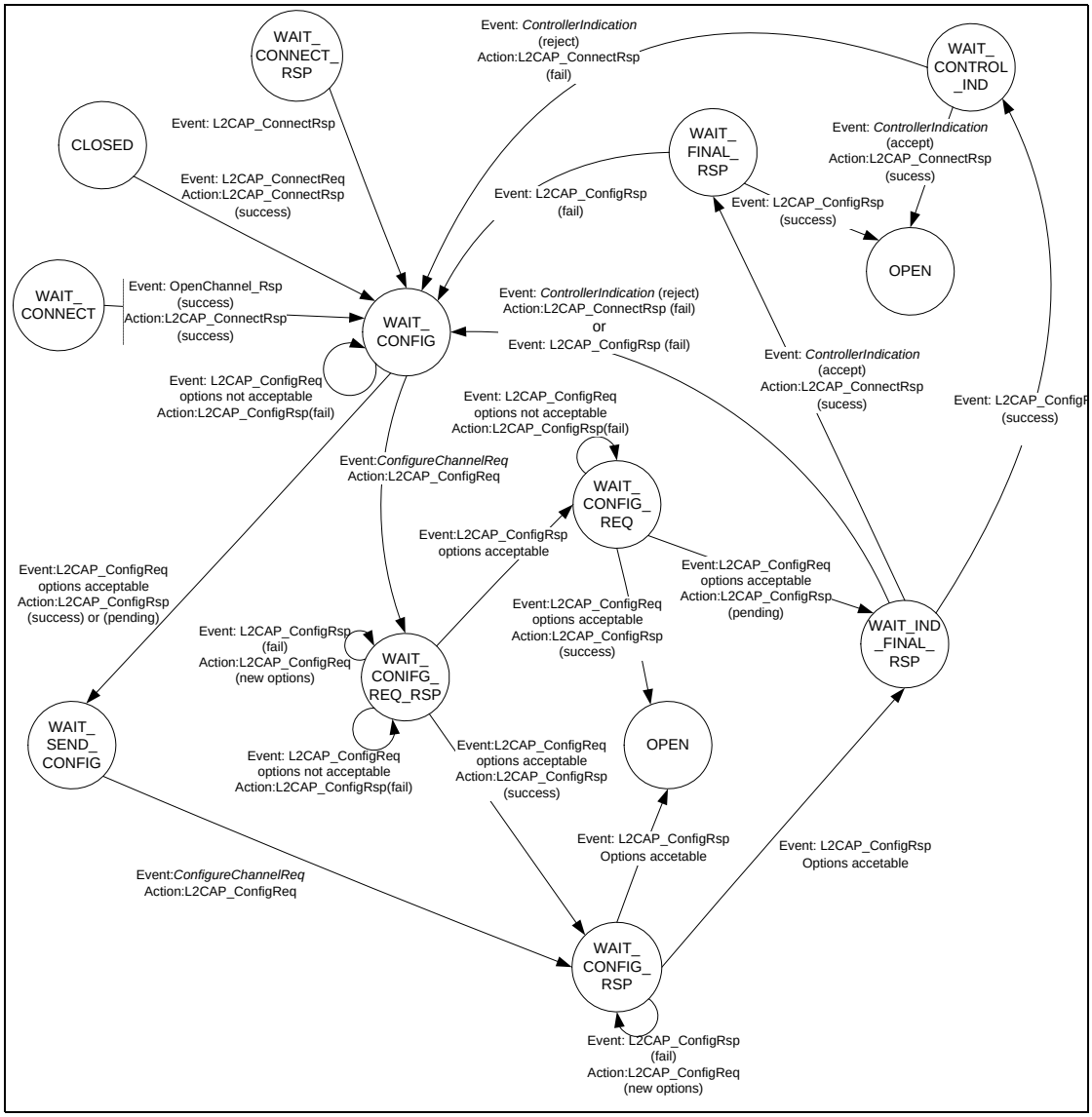

Figure 6.2: Configuration states and transitions.

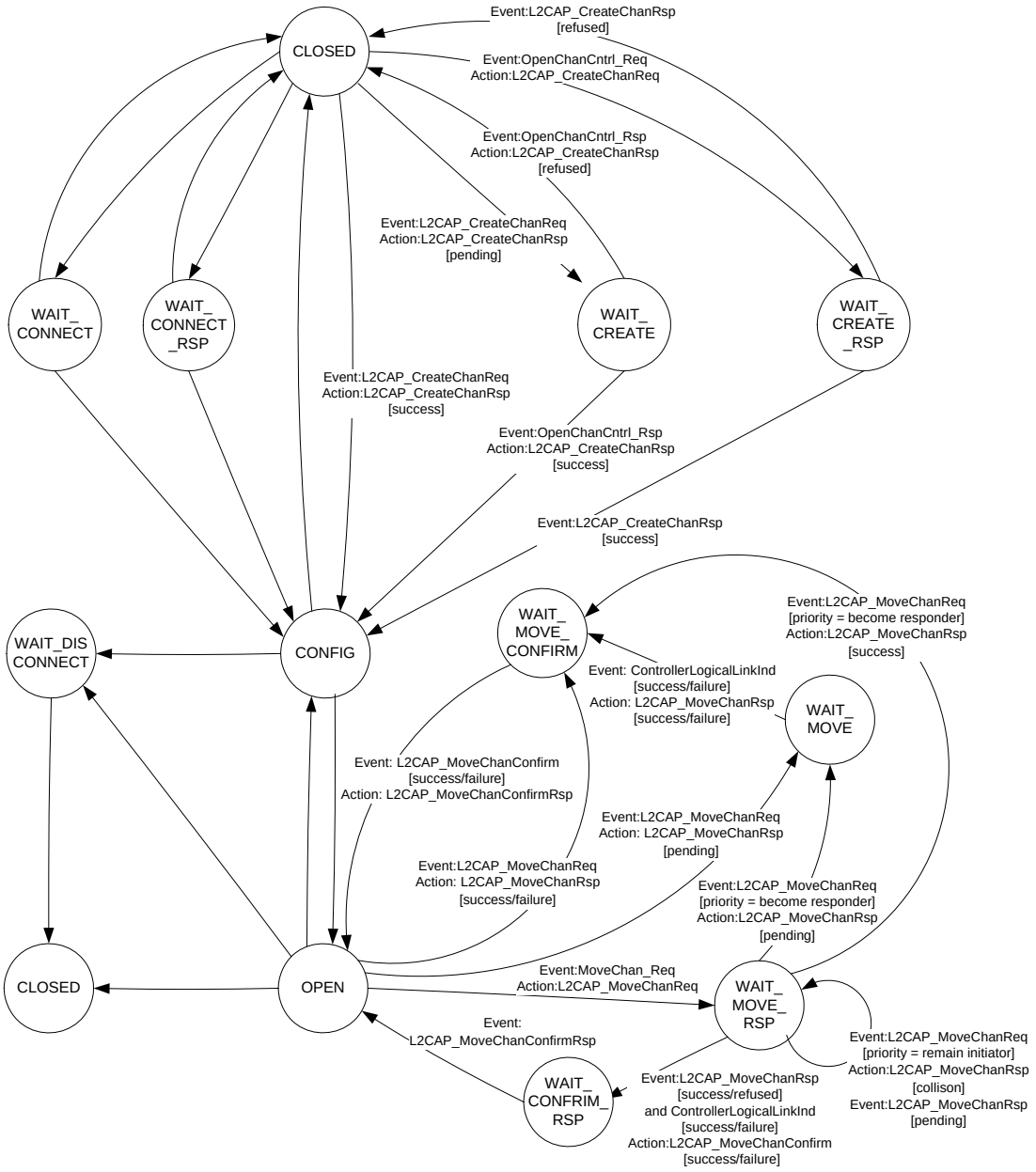

Figure 6.3: States and transitions–AMP enabled operation

Figure 6.3 is based on Figure 6.1 on page 110. Only the new transitions show event/action labels. Transitions without labels are the same as in Figure 6.1.

7 GENERAL PROCEDURES

This section describes the general operation of L2CAP, including the configuration process, the handling and the processing of user data for transportation over the air interface. This section also describes the operation of L2CAP features including the delivery of erroneous packets, the flushing of expired data and operation in connectionless mode, operation collision resolution, aggregation of best effort flow specifications, and prioritizing data over HCI.

Procedures for the flow control and retransmission modes are described in Section 8 on page 130.

7.1 CONFIGURATION PROCESS

Configuration consists of two processes, the Standard process and the Lockstep process. The Lockstep process shall be used if both L2CAP entities support the Extended Flow Specification option otherwise the Standard process shall be used.

For both processes, configuring the channel parameters shall be done independently for both directions. Both configurations may be done in parallel.

The Lockstep process is used when the channel parameters include an Extended Flow Specification option. The Lockstep process can be divided into two phases. In the first phase, each L2CAP entity shall receive an Extended Flow Specification option along with all non-default parameters from its peer L2CAP entity and then present the pair of Extended Flow specifications (local and remote) to its local Controller. In the second phase, each L2CAP entity shall report the result from its local Controller to the peer L2CAP entity. The Lockstep process is described in Section 7.1.3. For the Standard process, the following procedure shall be used for each direction:

1. Informing the remote side of the non-default parameters that the local side will accept using a Configuration Request.
2. Remote side responds, agreeing or disagreeing with these values, including the default ones, using a Configuration Response.
3. The local and remote devices repeat steps (1) and (2) until agreement on all parameters is reached.

Both the Lockstep and Standard processes can be abstracted into the initial Request configuration path and a Response configuration path, followed by the reverse direction phase. Reconfiguration follows a similar two-phase process by requiring configuration in both directions.

The decision on the amount of time (or messages) spent configuring the channel parameters before terminating the configuration is left to the implementation, but it shall not last more than 120 seconds.

7.1.1 Request path

The Request Path can configure the following:

- requester’s incoming MTU.
- requester’s outgoing flush timeout.
- requester’s outgoing QoS.
- requester’s incoming flow and error control information.
- requester's outgoing Frame Check Sequence option.
- requester's outgoing QoS using Extended Flow Specification option.
- requester's incoming Extended Window size option.

Table 7.1 on page 114 defines the configuration options that may be placed in a Configuration Request.

Parameter	Description
MTU	Incoming MTU information
FlushTO	Outgoing flush timeout1
QoS	Outgoing QoS information[1]
RFCMode	Incoming Retransmission and Flow Control Mode
FCS	Outgoing Frame Check Sequence
ExtFlowSpec	Outgoing QoS information[1]
ExtWindow	Incoming Extended Window size

Table 7.1: Parameters allowed in Request

1. FlushTO, QoS and ExtFlowSpec are considered QoS information. ExtFlowSpec is used instead of FlushTO and QoS when both devices support ExtFlowSpec.

The state machine for the configuration process is described in Section 6 on page 91.

7.1.2 Response path

The Response Path can configure the following:

- responder’s outgoing MTU, that is the remote side’s incoming MTU.
- remote side’s flush timeout.
- responder’s incoming QoS Flow Specification (remote side’s outgoing QoS Flow Specification).
- responder’s outgoing Flow and Error Control information
- responder’s incoming FCS option

- responder's incoming QoS Extended Flow Specification (remote side's outgoing QoS Flow Specification)
- responder's outgoing Extended Window size.

For the Standard process, if a request-oriented parameter is not present in the Request message (reverts to last agreed value), the remote side may negotiate for a non-default value by including the proposed value in a negative Response message.

Parameter	Description
MTU	Outgoing MTU information
FlushTO	Incoming flush timeout 1
QoS	Incoming QoS information[1]
RFCMode	Outgoing Retransmission and Flow Control Mode
FCS	Incoming Frame Check Sequence
ExtFlowSpec	Incoming QoS information[1]
ExtWindow	Outgoing Extended Window size

Table 7.2: Parameters allowed in Response

1. FlushTO, QoS and ExtFlowSpec are considered QoS information. ExtFlowSpec is used instead of FlushTO and QoS when both devices support ExtFLowSpec

7.1.3 Lockstep Configuration Process

Configuration Request packets are sent to establish or change the channel parameters including the QoS contract between two L2CAP entities. An Extended Flow Specification option along with any non-default parameters shall be sent in a Configuration Request following the sending or receipt of a Connect Response which accepts an L2CAP Connect Request for the channel being configured. Unlike the Standard process, negotiation involving the sending of multiple Configuration Request packets shall not be performed. In other words, only one Configuration Request packet shall be sent by each L2CAP entity during the Lockstep configuration process. The Lockstep process shall only be used during channel reconfiguration when an Extended Flow Specification option is present in the Configuration Request packet used for reconfiguration.

The Extended Flow Specification shall be sent for all channels created on AMP Controllers and shall only be sent for channels created on the BR/EDR controller if both the local and remote L2CAP entities have indicated support for the Extended Flow Specification for BR/EDR in their Extended Features masks. The Extended Features mask shall be obtained via the L2CAP Information Request/Response signaling mechanism (InfoType = 0x0002) prior to the issuance of the L2CAP Configuration Request. If a Configuration Request is sent

containing the Extended Flow Specification option then the Quality of Service option and Flush Timeout option shall not be included.

Configuration Response packets shall be sent in reply to Configuration Request packets except when the error condition is covered by a Command Reject response. Although the L2CAP Configuration signaling mechanism allows for the use of wildcards, wildcard values are not supported in the Extended Flow Specification since each parameter represents a property of the traffic in one direction only, and no negotiation is intended to be performed at the L2CAP Configuration level.

The recipient of a Configuration Request shall perform all necessary checks with the Controller to validate that the requested QoS can be granted. In the case of the BR/EDR Controller the L2CAP layer performs the Controller checks. If HCI is used then the L2CAP entity should check that the requested QoS can be achieved over the HCI transport. In order to perform these checks, the recipient needs to have the QoS parameters for both directions. In order for each side to determine when to perform relevant Controller checks, each side will reply with a result "Pending" (0x0004). If no parameters are sent in the Configuration Response packet with result "Pending" then the parameters sent in the Configuration Request have been accepted without change. This Lock-step procedure results in both L2CAP entities performing the following:

- Receiving a Configuration Request containing the Extended Flow Specification option along with all non-default parameters
- Sending a Configuration Response with any modifications to the Extended Flow Specification option and allowed modifications to non-default parameters (result "Pending")
- Sending a Configuration Request containing the Extended Flow Specification option along with all non-default parameters.
- Receiving a Configuration Response containing any modifications to the Extended Flow Specification option and allowed modifications to non-default parameters (result "Pending")

The ERTX timer is used when a Configuration Response is received with result "Pending" (see Section 6.2.2).

If a Configuration Response with result "success" is received before a Configuration Response with result "pending" is received the recipient shall disconnect the channel. This is a violation of the Lockstep configuration process.

If a device sends an Extended Flow Specification option in a Configuration Request with service type "Best Effort" and receives a Configuration Request with service type "Guaranteed," the channel shall be disconnected. If a device sends an Extended Flow Specification in a Configuration Request with type "Guaranteed" and receives a Configuration Request with service type "Best Effort," the channel shall be disconnected.

If the service type is "Best Effort" then values for certain parameters may be sent in a Configuration Response with result "Pending" to indicate the maximum bandwidth the sender of the Configuration Response is capable to receive. The values sent in a Configuration Response with result "Pending" and service type Best Effort shall be in accordance with Table 7.3.

Parameter	Changes permitted by responder
Maximum SDU Size	May decrease only
SDU Inter-arrival Time	May increase only
Access Latency	None
Flush Timeout	None

Table 7.3: Permitted parameter in L2CAP Configuration Response for Service Type "Best Effort"

After the Configuration Response is received with result "Pending", L2CAP may issue the necessary checks with the Controller.

If the Controller cannot support the Extended Flow Specifications with service type "Guaranteed," then the recipient of the Configuration Request shall send a Configuration Response indicating a result code of "Failure - flow spec rejected" (0x0005). If the Controller indicates that it can support the Extended Flow Specifications, then the recipient of the Configuration Request shall send a Configuration Response with result code of "Success" (0x0000) with no parameters.

If the Result of the Configuration Response is Failure (0x0005) for service type "Guaranteed" then an Extended Flow Specification option may be sent in the Configuration Response. The Extended Flow Specification parameters sent in the Configuration Response may be changed to reflect a QoS level that would be acceptable, but shall only be changed in accordance with Table 7.4.

Parameter	Changes permitted by responder
Maximum SDU Size	None
SDU Inter-arrival Time	None
Access Latency	May decrease only
Flush Timeout	May decrease only (unless set to 0xFFFFFFFF, in which case no change is permitted)

Table 7.4: Permitted parameter changes in L2CAP Configuration Response for Service Type "Guaranteed"

If an L2CAP Configuration Response is received containing the Extended Flow Specification option with the same values sent earlier, the upper layer shall be notified of the error.

7.2 FRAGMENTATION AND RECOMBINATION

Fragmentation is the breaking down of PDUs into smaller pieces for delivery from L2CAP to the lower layer. Recombination is the process of reassembling a PDU from fragments delivered up from the lower layer. Fragmentation and Recombination may be applied to any L2CAP PDUs.

7.2.1 Fragmentation of L2CAP PDUs

An L2CAP implementation may fragment any L2CAP PDU for delivery to the lower layers. If L2CAP runs directly over the Controller without HCI , then an implementation may fragment the PDU into multiple Controller packets for transmission over the air. If L2CAP runs above the HCI, then an implementation may send HCI transport sized fragments to the Controller. All L2CAP fragments associated with an L2CAP PDU shall be processed for transmission by the Controller before any other L2CAP PDU for the same logical transport shall be processed.

For example, in the BR/EDR controller the two LLID bits defined in the first octet of baseband payload (also called the frame header) are used to signal the start and continuation of L2CAP PDUs. LLID shall be ’10’ for the first segment in an L2CAP PDU and ’01’ for a continuation segment. An illustration of fragmentation for a BR/EDR controller is shown in Figure 7.1 on page 118. An example of how fragmentation might be used in a device with HCI is shown in Figure 7.2 on page 119.

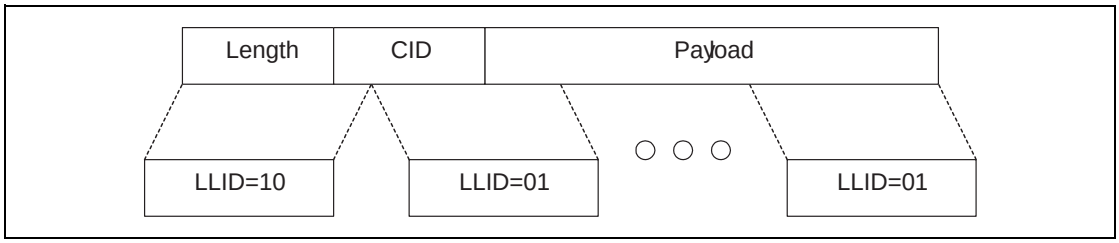

Figure 7.1: L2CAP fragmentation in a BR/EDR Controller

Note: The BR/EDR link controller is able to impose a different fragmentation on the PDU by using "start" and "continuation" indications as fragments are translated into baseband packets. Thus, both L2CAP and the BR/EDR link controller use the same mechanism to control the size of fragments.

7.2.2 Recombination of L2CAP PDUs

Controllers will attempt to deliver packets in sequence and without errors. Recombination of fragments may occur in the Controller but ultimately it is the responsibility of L2CAP to reassemble PDUs and SDUs and to check the length field of the SDUs. As the Controller receives packet fragments, it either signals the L2CAP layer on the arrival of each fragment, or accumulates a number of fragments (before the receive buffer fills up or a timer expires) before passing packets to the L2CAP layer.

An L2CAP implementation shall use the length field in the header of L2CAP PDUs, see Section 3 on page 40, as a consistency check and shall discard any L2CAP PDUs that fail to match the length field. If channel reliability is not needed, packets with invalid lengths may be silently discarded. For reliable channels using Basic mode, an L2CAP implementation shall indicate to the upper layer that the channel has become unreliable. Reliable channels are defined by having an infinite flush timeout value as specified in Section 5.2 on page 74. For higher data integrity L2CAP should be operated in the Enhanced Retransmission Mode.

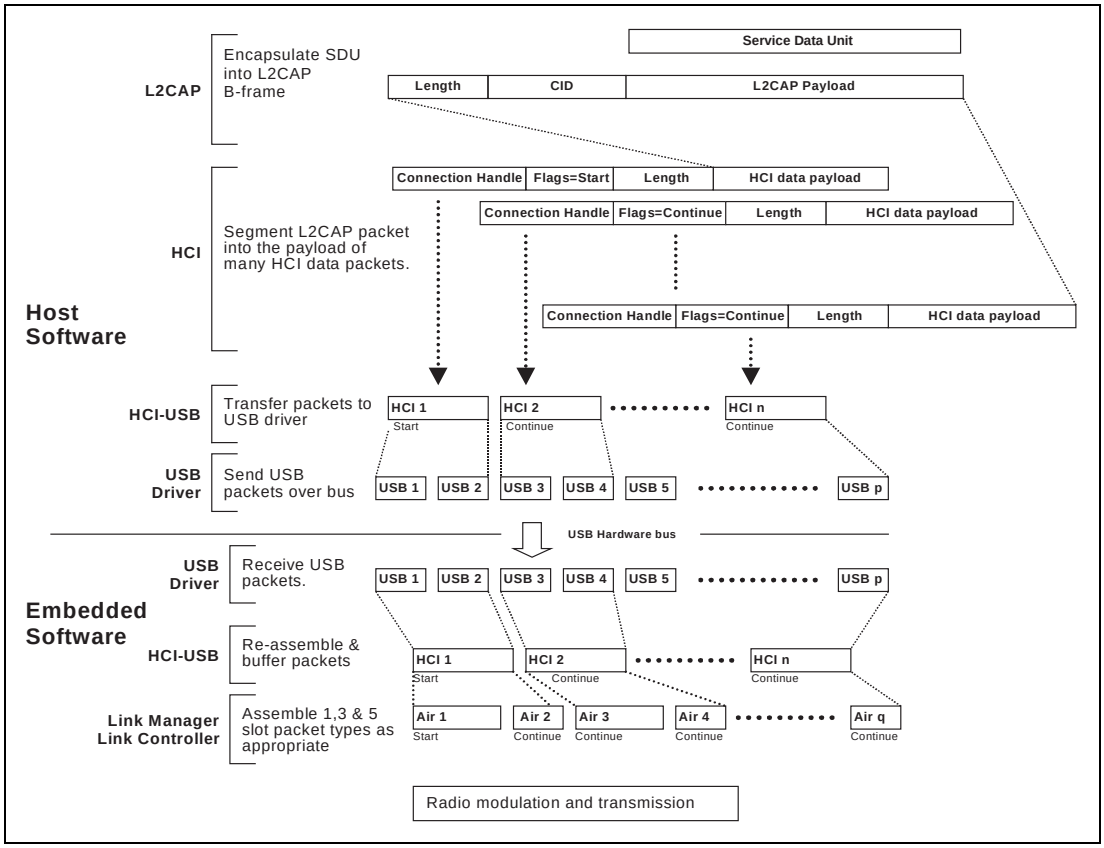

Figure 7.2: Example of fragmentation processes in a device with a BR/EDR Controller and USB HCI transport.

7.3 ENCAPSULATION OF SDUs

All SDUs are encapsulated into one or more L2CAP PDUs.

In Basic L2CAP mode, an SDU shall be encapsulated with a minimum of L2CAP protocol elements, resulting in a type of L2CAP PDU called a Basic Information Frame (B-frame).

Segmentation and Reassembly operations are only used in Enhanced Retransmission mode, Streaming mode, Retransmission mode, and Flow Control mode. SDUs may be segmented into a number of smaller packets called SDU segments. Each segment shall be encapsulated with L2CAP protocol elements resulting in an L2CAP PDU called an Information Frame (I-frame).

The maximum size of an SDU segment shall be given by the Maximum PDU Payload Size (MPS). The MPS parameter may be exported using an implementation specific interface to the upper layer.

Note that this specification does not have a normative service interface with the upper layer, nor does it assume any specific buffer management scheme of a host implementation. Consequently, a reassembly buffer may be part of the upper layer entity. It is assumed that SDU boundaries shall be preserved between peer upper layer entities.

7.3.1 Segmentation of L2CAP SDUs

In Flow Control, Streaming, or Retransmission modes, incoming SDUs may be broken down into segments, which shall then be individually encapsulated with L2CAP protocol elements (header and checksum fields) to form I-frames. I-frames are subject to flow control and may be subject to retransmission procedures. The header carries a 2 bit SAR field that is used to identify whether the I-frame is a 'start', 'end' or 'continuation' packet or whether it carries a complete, unsegmented SDU. Figure 7.3 on page 120 illustrates segmentation and fragmentation.

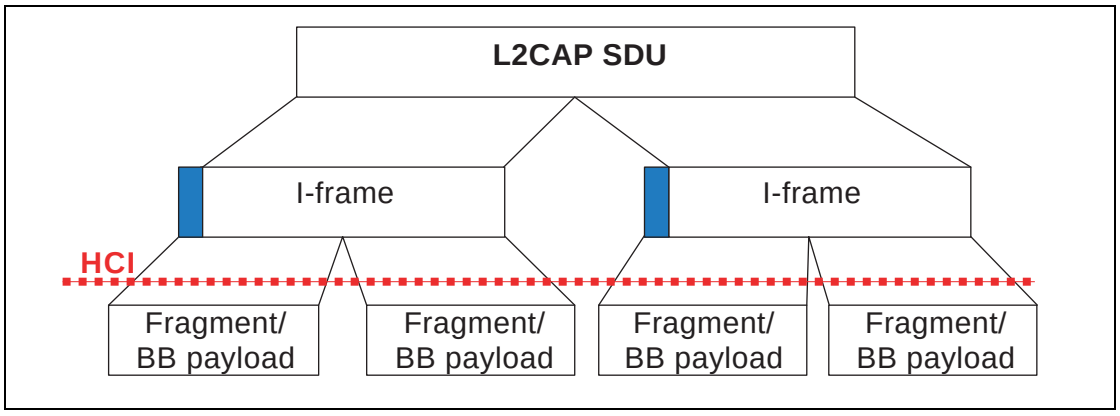

Figure 7.3: Segmentation and fragmentation of an SDU in a BR/EDR Controller.

7.3.2 Reassembly of L2CAP SDUs

The receiving side uses the SAR field of incoming 'I-frames' for the reassembly process. The L2CAP SDU length field, present in the "start of SDU" I-frame, is an extra integrity check, and together with the sequence numbers may be used

to indicate lost L2CAP SDUs to the application. Figure 7.3 on page 120 illustrates segmentation and fragmentation.

7.3.3 Segmentation and fragmentation

Figure 7.4 on page 122 illustrates the use of segmentation and fragmentation operations to transmit a single SDU. Note that while SDUs and L2CAP PDUs are transported in peer-to-peer fashion, the fragment size used by the Fragmentation and Recombination routines is implementation specific and may not be the same in the sender and the receiver. The over-the-air sequence of packet fragments as created by the sender is common to both devices.

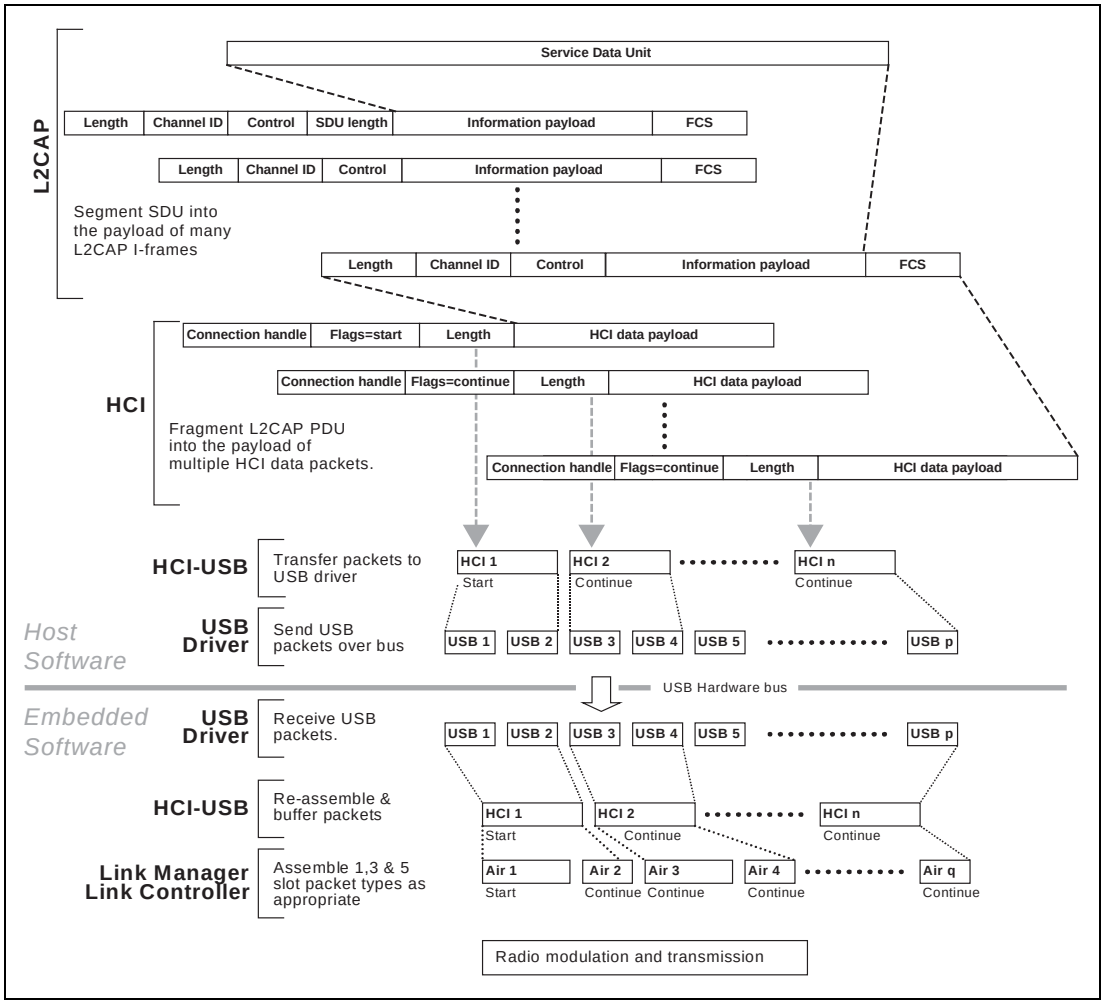

Figure 7.4: Example of segmentation and fragment processes in a device with a BR/EDR Controller and USB HCI Transport[1]

1. For simplicity, the stripping of any additional HCI and USB specific information fields prior to the creation of the baseband packets (Air_1, Air_2, etc.) is not shown in the figure.

7.4 DELIVERY OF ERRONEOUS L2CAP SDUS

Some applications may require corrupted or incomplete L2CAP SDUs to be delivered to the upper layer. If delivery of erroneous L2CAP SDUs is enabled, the receiving side will pass information to the upper layer on which parts of the L2CAP SDU (i.e., which L2CAP frames) have been lost, failed the error check, or passed the error check. If delivery of erroneous L2CAP SDUs is disabled, the receiver shall discard any L2CAP SDU segment with any missing frames or any frames failing the error checks. L2CAP SDUs whose length field does not match the actual frame length shall also be discarded.

7.5 OPERATION WITH FLUSHING FOR BR/EDR CONTROLLER

In the L2CAP configuration using either the Flush Timeout option or the Extended Flow Specification option, the Flush timeout may be set separately per L2CAP channel, but in the BR/EDR baseband, the flush mechanisms operate per ACL logical transport.

When there is more than one L2CAP channel mapped to the same ACL logical transport, the automatic flush time-out does not discriminate between L2CAP channels. The automatic flush time-out also applies to unicast data sent via the L2CAP connectionless channel. The exception is packets marked as non-automatically-flushable via the Packet_Boundary_Flag in the HCI ACL Data Packet (see Section 1.1 on page 26). The automatic flush time-out flushes a specific automatically-flushable L2CAP PDU. The HCI Flush command flushes all outstanding L2CAP PDUs for the ACL logical transport including L2CAP PDUs marked as non-automatically-flushable. Therefore, care has to be taken when using the Automatic Flush Time-out and the HCI Flush command. The HCI Enhanced Flush command should be used instead.

All packets associated with a reliable connection shall be marked as non-automatically-flushable (if it is mapped to an ACL logical transport with a finite automatic flush time-out) or L2CAP Enhanced Retransmission mode or Retransmission mode shall be used. In Enhanced Retransmission mode or Retransmission mode, loss of flushed L2CAP PDUs on the channel is detected by the L2CAP ARQ mechanism and they are retransmitted. Note that L2CAP Enhanced Retransmission mode or Retransmission mode might be used for other purposes such as the need for a residual error rate that is much smaller than the baseband can deliver. In this situation L2CAP Enhanced Retransmission mode or Retransmission mode and the Non-Flushable Packet Boundary Flag feature can be used at the same time.

If it is desired to send unicast data via the L2CAP connectionless channel which is not subject to automatic flushing, then the data should be marked as non-automatically flushable if it is mapped to an ACL logical transport with a finite automatic flush time-out. Unicast data sent via the L2CAP connectionless channel may be marked flushable.

There is only one automatic flush time-out setting per ACL logical transport. Therefore, all time bounded L2CAP channels on an ACL logical transport with an automatic flush time-out setting should configure the same flush time-out value at the L2CAP level. The flush time-out setting for the ACL logical transport also applies to unicast data sent via the L2CAP connectionless channel which are marked flushable.

If Automatic Flush Time-out is used, then it should be taken into account that it only flushes one L2CAP PDU. If one PDU has timed out and needs flushing, then other automatically-flushable packets on the same logical transport are also likely to need flushing. Therefore, flushing can be handled by the HCI Enhanced Flush command so that all outstanding automatically-flushable L2CAP PDUs are flushed.

When both reliable and isochronous data is to be sent over the same ACL logical transport, an infinite Automatic Flush Time-out can be used. In this case the isochronous data is flushed using the HCI Enhanced Flush command with Packet_Type set to "Automatically-Flushable Only," thus preserving the reliable data.

7.6 CONNECTIONLESS DATA CHANNEL

In addition to connection-oriented channels, L2CAP also provides a connectionless channel. Data sent on the connectionless channel shall only be sent over the BR/EDR radio. The connectionless channel allows broadcast transmissions from the master device to all members of the piconet or unicast transmissions from either a master or slave to a single remote device. Data sent through the connectionless channel is sent in a best-effort manner. The connectionless channel provided by L2CAP has no quality of service.

While L2CAP itself does not provide retransmission for data sent via the connectionless channel, the baseband does provide an ARQ scheme for unicast data (see [Vol. 2] Part B, Section 7.6). If a higher degree of reliability is desired for unicast data sent via the connectionless L2CAP channel than is provided by the baseband ARQ scheme then an ARQ scheme should be implemented at a higher layer.

No acknowledgement is provided by the baseband for broadcast transmissions and hence broadcast transmissions sent via the connectionless L2CAP channel are unreliable and hence might or might not reach each member of the piconet.

The receiving L2CAP entity may silently discard data received via the connectionless L2CAP channel if the data packet is addressed to a PSM and no application is registered to receive data on that PSM.

Note that L2CAP does not provide flow control for either connection-oriented L2CAP channels operating in Basic mode or for traffic on the connectionless L2CAP channel. Hence if data received by L2CAP is not accepted by the target

applications in a timely manner, congestion can occur in a receiving L2CAP implementation. For connection-oriented channels, the receiving L2CAP entity may elect to close a channel if the target application for that channel does not accept the data in a timely manner. Since this option is not available for unicast data received via the connectionless L2CAP channel, the receiving L2CAP entity may instead elect to de-register the application receiving the data or to disconnect the underyling physical link. An application shall be notified if it is de-registered. If the underlying physical link is disconnected then all applications utilizing that physical link shall be notified.

Unicast data shall only be sent via the connectionless L2CAP channel to a remote device if the remote device indicates support for Unicast Connectionless Data Reception in the L2CAP Extended Features Mask.[1]

Unicast data sent via the L2CAP connectionless channel are subject to automatic flushing and hence the packet boundary flags should be set appropriately if the controller supports the Packet Boundary Flag feature. See Section 7.5 for further details. Since the receiving L2CAP entity has no mechanism to enable it to know whether received packets were originally marked as flushable or non-flushable on the transmitting device, the receiving L2CAP entity should treat all unicast packets received via the connectionless L2CAP packet as non-flushable.

If encryption is required for a given profile, then the profile or application shall ensure that authentication is performed and encryption is enabled prior to sending any unicast data on the connectionless L2CAP channel by utilizing Security Mode 4 as defined in GAP ([Vol. 3] Part C, Section 5.2.2). There is no mechanism provided in this specification to prevent reception of unencrypted data on the connectionless L2CAP channel. An application which requires received data to be encrypted should ignore any unencrypted data it may receive over the connectionless channel.

Broadcaset transmissions to the connectionless channel are sent with the broadcast LT_ADDR and hence may be received by any of the slaves inthe piconet. If it is desirable to restrict the reception of the transmitted data to only a subset of the slaves in the piconet, then higher level encryption may be used to support private communication.

The master will not receive transmissions broadcast on the connectionless channel.Therefore, higher layer protocols must loopback any broadcast data traffic being sent to the master device if required.

1. Note that the Unicast Connectionless Data Reception bit in the L2CAP Extended Features Mask does not in any way indicate support or lack of support for reception of broadcast data on the connectionless L2CAP channel even though both broadcast data and unicast data are sent and received using the same CID (0x0002). For historical reasons, there is no bit to indicate support for sending or receiving of broadcast data on the connectionless L2CAP channel.

The connectionless data channel shall not be used with Enhanced Retransmission mode, Retransmission Mode or Flow Control Mode.

7.7 OPERATION COLLISION RESOLUTION

When two devices request the same operation by sending a request packet with the same code, a collision can occur. Some operations require collision resolution. The description of each operation in Section 4 will indicate if collision resolution is required. Both devices must know which request will be rejected. The following algorithm shall be used by both devices to determine which request to reject.

1. Set i=0 (representing the least significant octet of the BD_ADDR).
2. Compare the octet[i] of the BD_ADDR of both devices. If the octets are not equal go to step 4.
3. Increment i by 1. Go to step 2.
4. The device with the larger BD_ADDR octet shall reject the request from the other device.

7.8 AGGREGATING BEST EFFORT EXTENDED FLOW SPECIFICATIONS

There shall only be one pair of Extended Flow Specifications per logical link and only one “Best Effort” logical link per physical link. Thus, all Best Effort L2CAP channels running over the same physical link are aggregated into one logical link and the Best Effort Flow specifications describing the traffic for each channel running over an AMP Controller shall be aggregated to a single pair of Extended Flow specifications (one for each direction). The purpose of a Best Effort flow specification is to specify the maximum data rate of the data that can be delivered to the Controller from the host and/or taken from the Controller by the host in order to help the Controller to not over allocate bandwidth on the physical link. Since L2CAP performs admission control for BR/EDR Controllers it is not necessary to aggregate Best Effort channels for BR/EDR Controllers.

The two Extended Flow Specification parameters that are affected by Best Effort are Maximum SDU size and SDU Inter-arrival Time. A data rate is determined by dividing the Maximum SDU size by the SDU Inter-arrival time giving a value in bytes per second. The important value is the data rate and not the Maximum SDU size or SDU Inter-arrival time.

Best Effort aggregation shall occur when performing any of the three operations:

- Configuring a new Best Effort channel
- Disconnecting a Best Effort channel
- Moving a Best Effort a channel

During L2CAP channel configuration, the Extended Flow Specifications are exchanged and each L2CAP entity is allowed to modify the other's flow specification (lower the values). If a Best Effort logical link already exists (meaning there is at least one other Best Effort channel) then the new flow specifications shall be aggregated with the existing Best Effort aggregate before sending it to the Controller. When a Best Effort channel is moved or disconnected a new aggregate shall be created. If the new aggregate is different from the previous aggregate it shall be given to the Controller. The following guidelines are provided for aggregating Best Effort Flow specification parameters. Keep in mind that the data rate is the important value so the description shows how to aggregate data rates.

1. The value 0xFFFF is used for Maximum SDU Size and the value 0xFFFFFFFF is used for SDU Inter-arrival time to indicate that the actual values are unknown and maximum bandwidth is assumed. Therefore, if these values exist in an Extended Flow Specification then the aggregate becomes 0xFFFF and 0xFFFFFFFF for Maximum SDU Size and SDU Inter-arrival time respectively.
2. In general it is assumed that data rates provided by the local applications can be added together. For example if one application indicates a data rate of 100 bytes/sec and a second application indicates a data rate of 100 bytes/sec then the aggregate data rate from the two applications is 200 bytes/sec. This is assumed for both directions.
3. The adjustments (sent in a Configuration Response) made by the remote device to an outgoing flow specification are assumed to be made on behalf of the application. These adjustments reduce the data rate of the outgoing flow specification. The reduced data rates can be added to data rates from other applications.
4. The final data rates shall be converted back into Maximum SDU Size and SDU Inter-arrival time to be passed to the Controller. Controllers may have a maximum PDU size or a “preferred” PDU size. When possible the “preferred” size should be used for the Maximum SDU size and the SDU Inter-arrival time should be set to a value that achieves the desired data rate. If the data rate cannot be achieved by using the “preferred” PDU size then an integer multiple of the preferred PDU size should be used.

7.9 PRIORITIZING DATA OVER HCI

In order for guaranteed channels to meet their guarantees, L2CAP should prioritize traffic over the HCI transport in devices that support HCI. Packets for Guaranteed channels should receive higher priority than packets for Best Effort channels.

7.10 SUPPORTING EXTENDED FLOW SPECIFICATION FOR BR/EDR CONTROLLERS

If both the local L2CAP entity and the remote L2CAP entity indicate support for Extended Flow Specification for BR/EDR in the Extended Feature Mask then all channels created between the two devices shall send an Extended Flow Specification option and shall use the Lockstep configuration procedure. In addition all channels shall use Enhanced Retransmission mode or Streaming mode. If one or both L2CAP entities do not indicate support for Extended Flow Specification for BR/EDR in the Extended Feature Mask then the Lockstep configuration procedure shall not be used and the Extended Flow Specification option shall not be sent for channels created over the BR/EDR controller between the two devices.

The L2CAP entity shall perform admission control for Guaranteed channels during the Lockstep configuration procedure (see Section 7.1.3). Admission control is performed to determine if the requested Guaranteed QoS can be achieved by the BR/EDR Controller without compromising existing Guaranteed channels running on the BR/EDR Controller. If HCI is used then the L2CAP entity shall also verify that the QoS can be achieved over the HCI transport.

In performing admission control the L2CAP layer shall reject a Guaranteed QoS request that causes at least one of the following rules to be violated.

1. The total guaranteed data rate in both directions shall not exceed two times the highest Symmetric Max of the BR/EDR controller (see [vol.2, part B] Section 6.7 on page 130). For example for a Basic Rate Controller the highest Symmetric Max Rate is 433.9kb/s (DH5) from Table 6.9 in [vol.2, part B] Section 6.7 on page 130. Two times that value is 867.8kb/s.
2. The total guaranteed data rate in any one direction shall not exceed the highest Asymmetric Max Rate of the BR/EDR controller (see Volume 2, Part B, section 6.7). For example the highest Asymmetric Max Rate for Basic Rate is 723.2kb/s (DH5 packet) from Table 6.9 in [vol.2, part B] Section 6.7 on page 130.

The data rate of a Guaranteed channel is calculated by dividing the Maximum SDU size in an Extended Flow Specification by the SDU Inter-arrival time. Total guaranteed data rate in both directions is calculated by taking the sum of the data rates in both directions for all existing Guaranteed channels plus the data rate in both directions of the requested Guaranteed channel (i.e. data rates from the both outgoing and incoming Extended Flow Specifications). Total guaranteed data rate for one direction is calculated by taking the sum of the data rates in one direction for all existing Guaranteed channels plus the data rate in the same direction of the requested Guaranteed channel.

An L2CAP entity should use additional information for admission control that may result in a Guaranteed QoS request being rejected even if none of the

rules are violated. This allows the L2CAP entity to account for things such as CQDDR, SCO/eSCO channels, LMP traffic, page scanning, etc.

In order to meet the access latency and/or data rate required by a Guaranteed channel, the L2CAP entity should:

a) Prioritize traffic over the HCI transport in devices that support HCI.

b) Give conformant packets for Guaranteed channels higher priority than packets for Best Effort channels. Packets for Best Effort channels should have higher priority than non-conformant packets for Guaranteed channels. (See Section 5.6 for a discussion of non-conformant and conformant traffic).

c) Utilize the SAR feature to restrict the PDU sizes of Best Effort SDUs so that they do not prevent the Controller from sending the SDUs of the Guaranteed channel within the time periods required by its Extended Flow Specification.

When a channel is reconfigured the Lockstep configuration process is only used when an Extended Flow Specification option is present in the Configuration Request packet as described in Section 7.1.3.

8 PROCEDURES FOR FLOW CONTROL AND RETRANSMISSION

When Enhanced Retransmission mode, Streaming mode, Flow Control mode, or Retransmission mode is used, the procedures defined in this chapter shall be used, including the numbering of information frames, the handling of SDU segmentation and reassembly, and the detection and notification of errored frames. Retransmission mode and Enhanced Retransmission mode also allow the sender to resend errored frames on request from the receiver.

8.1 INFORMATION RETRIEVAL

Before attempting to configure Enhanced Retransmission mode, Streaming mode, Flow Control mode, or Retransmission mode on a channel, support for the suggested mode shall be verified by performing an information retrieval for the “Extended features supported” information type (0x0002). If the information retrieval is not successful or the “Extended features mask” bit is not set for the wanted mode, the mode shall not be suggested in a configuration request.

8.2 FUNCTION OF PDU TYPES FOR FLOW CONTROL AND RETRANSMISSION

Two frame formats are defined for Enhanced Retransmission mode, Streaming Mode, Flow Control Mode, and Retransmission mode (see Section 3.3 on page 41). The I-frame is used to transport user information instead of the B-frame. The S-frame is used for supervision.

8.2.1 Information frame (I-frame)

I-frames are sequentially numbered frames containing information fields. I-frames also include some of the functionality of RR frames (see below).

8.2.2 Supervisory Frame (S-frame)

The S-frame is used to control the transmission of I-frames. For Retransmission mode and Flow Control mode, the S-frame has two formats: Receiver Ready (RR) and Reject (REJ). A description of how S-frames are used in Enhanced Retransmission mode is given in Section 8.6.1. S-frames are not used in Streaming mode. The following description of S-frames only applies to Retransmission mode and Flow Control mode.

8.2.2.1 Receiver Ready (RR)

The receiver ready (RR) S-frame is used to:

1. Acknowledge I-frames numbered up to and including ReqSeq - 1.
2. Enable or disable retransmission of I-frames by updating the receiver with the current status of the Retransmission Disable Bit.

The RR frame has no information field.

8.2.2.2 Reject (REJ)

The reject (REJ) S-frame is used to request retransmission of all I-frames starting with the I-frame with TxSeq equal to ReqSeq specified in the REJ. The value of ReqSeq in the REJ frame acknowledges I-frames numbered up to and including ReqSeq - 1. I-frames that have not been transmitted, shall be transmitted following the retransmitted I-frames.

When a REJ is transmitted, it triggers a REJ Exception condition. A second REJ frame shall not be transmitted until the REJ Exception condition is cleared. The receipt of an I-frame with a TxSeq equal to the ReqSeq of the REJ frame clears the REJ Exception. The REJ Exception condition only applies to traffic in one direction. Note: this means that only valid I-frames can be rejected.

8.3 VARIABLES AND SEQUENCE NUMBERS

The sending peer uses the following variables and Sequence numbers:

- TxSeq – the send Sequence number used to sequentially number each new I-frame transmitted.
- NextTxSeq – the Sequence number to be used in the next new I-frame transmitted.
- ExpectedAckSeq – the Sequence number of the next I-frame expected to be acknowledged by the receiving peer.

The receiving peer uses the following variables and Sequence numbers:

- ReqSeq – The Sequence number sent in an acknowledgement frame to request transmission of I-frame with TxSeq = ReqSeq and acknowledge receipt of I-frames up to and including (ReqSeq-1)
- ExpectedTxSeq – the value of TxSeq expected in the next I-frame.
- BufferSeq – When segmented I-frames are buffered this is used to delay acknowledgement of received I-frame so that new I-frame transmissions do not cause buffer overflow.

All variables have the range 0 to 63. Arithmetic operations on state variables (NextTXSeq, ExpectedTxSeq, ExpectedAckSeq, BufferSeq) and sequence numbers (TxSeq, ReqSeq) contained in this document shall be taken modulo 64.

To perform Modulo 64 operation on negative numbers multiples of 64 shall be added to the negative number until the result becomes non-negative.

8.3.1 Sending peer

8.3.1.1 Send sequence number TxSeq

I-frames contain TxSeq, the send sequence number of the I-frame. When an I-frame is first transmitted, TxSeq is set to the value of the send state variable NextTXSeq. TxSeq is not changed if the I-frame is retransmitted.

8.3.1.2 Send state variable NextTXSeq

The CID sent in the information frame is the destination CID and identifies the remote endpoint of the channel. A send state variable NextTxSeq shall be maintained for each remote endpoint. NextTxSeq is the sequence number of the next in-sequence I-frame to be transmitted to that remote endpoint. When the link is created NextTXSeq shall be initialized to 0.

The value of NextTxSeq shall be incremented by 1 after each in-sequence I-frame transmission, and shall not exceed ExpectedAckSeq by more than the maximum number of outstanding I-frames (TxWindow). The value of TxWindow shall be in the range 1 to 32 for Retransmission mode and Flow Control mode. The value of TxWindow shall be in the range of 1 to 63 for Enhanced Retransmission mode.

8.3.1.3 Acknowledge state variable ExpectedAckSeq

The CID sent in the information frame is the destination CID and identifies the remote endpoint of the channel. An acknowledge state variable ExpectedAckSeq shall be maintained for each remote endpoint. ExpectedAckSeq is the sequence number of the next in-sequence I-frame that the remote receiving peer is expected to acknowledge. (ExpectedAckSeq – 1 equals the TxSeq of the last acknowledged I-frame). When the link is created ExpectedAckSeq shall be initialized to 0.
Note that if the next acknowledgement acknowledges a single I-frame then its ReqSeq will be expectedAckSeq + 1.

If a valid ReqSeq is received from the peer then ExpectedAckSeq is set to ReqSeq. A valid ReqSeq value is one that is in the range ExpectedAckSeq ≤ ReqSeq ≤ NextTxSeq.

Note: The comparison with NextTXSeq must be ≤ in order to handle the situations where there are no outstanding I-frames.

These inequalities shall be interpreted in the following way: ReqSeq is valid, if and only if (ReqSeq-ExpectedAckSeq) mod 64 ≤ (NextTXSeq-ExpectedAckSeq) mod 64. Furthermore, from the description of NextTXSeq, it can be seen that (NextTXSeq-ExpectedAckSeq) mod 64 ≤ TxWindow.

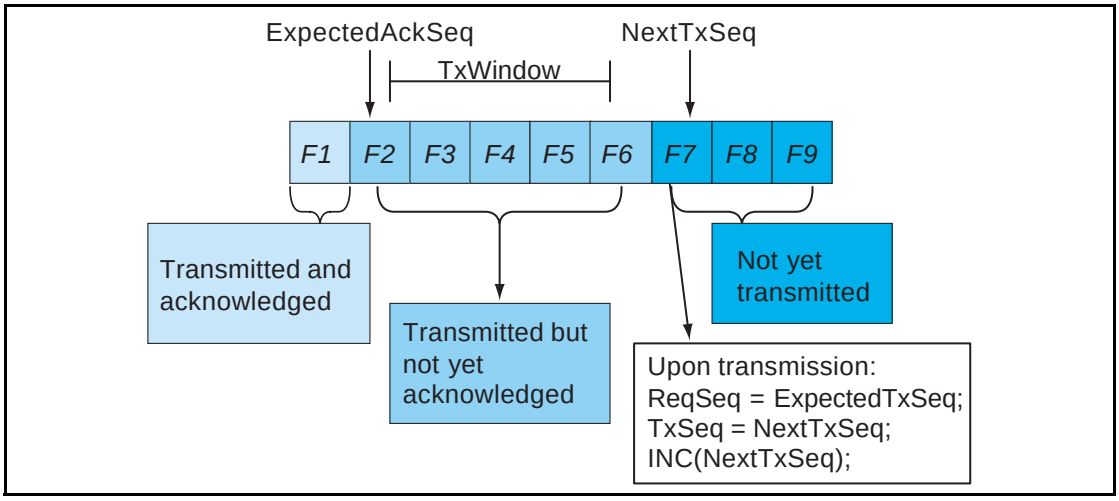

Figure 8.1: Example of the transmitter side

Figure 8.1 on page 133 shows TxWindow=5, and three frames awaiting transmission. The frame with number *F7* may be transmitted when the frame with *F2* is acknowledged. When the frame with *F7* is transmitted, TxSeq is set to the value of NextTXSeq. After TxSeq has been set, NextTxSeq is incremented.

The sending peer expects to receive legal ReqSeq values, these are in the range ExpectedAckSeq up to and including NextTxSeq. Upon receipt of a ReqSeq value equal to the current NextTxSeq all outstanding I-frames have been acknowledged by the receiver.

8.3.2 Receiving peer

8.3.2.1 Receive sequence number ReqSeq

All I-frames and S-frames contain ReqSeq, the send Sequence number (TxSeq) that the receiving peer requests in the next I-frame.

When an I-frame or an S-frame is transmitted, the value of ReqSeq shall be set to the current value of the receive state variable ExpectedTxSeq or the buffer state variable BufferSeq. The value of ReqSeq shall indicate that the data link layer entity transmitting the ReqSeq has correctly received all I-frames numbered up to and including ReqSeq – 1.

Note: The option to set ReqSeq to BufferSeq instead of ExpectedTxSeq allows the receiver to impose flow control for buffer management or other purposes. In this situation, if BufferSeq<>ExpectedTxSeq, the receiver should also set the retransmission disable bit to 1 to prevent unnecessary retransmissions.

8.3.2.2 Receive state variable, ExpectedTxSeq

Each channel shall have a receive state variable (ExpectedTxSeq). The receive state variable is the sequence number (TxSeq) of the next in-sequence I-frame expected.

The value of the receive state variable shall be the last in-sequence, valid I-frame received.

8.3.2.3 Buffer state variable BufferSeq

Each channel may have an associated BufferSeq. BufferSeq is used to delay acknowledgement of frames until they have been pulled by the upper layers, thus preventing buffer overflow. BufferSeq and ExpectedTxSeq are equal when there is no extra segmentation performed and frames are pushed to the upper layer immediately on reception. When buffer space is scarce, for example when frames reside in the buffer for a period, the receiver may choose to set ReqSeq to BufferSeq instead of ExpectedTxSeq, incrementing BufferSeq as buffer space is released. The windowing mechanism will ensure that transmission is halted when ExpectedTxSeq - BufferSeq is equal to TxWindow.

Note: Owing to the variable size of I-frames, updates of BufferSeq may be based on changes in available buffer space instead of delivery of I-frame contents.

I-Frames shall have sequence numbers in the range ExpectedTxSeq ≤ TxSeq < (BufferSeq + TxWindow).

On receipt of an I-frame with TxSeq equal to ExpectedTxSeq, ExpectedTxSeq shall be incremented by 1 regardless of how many I-frames with TxSeq greater than ExpectedTxSeq were previously received.

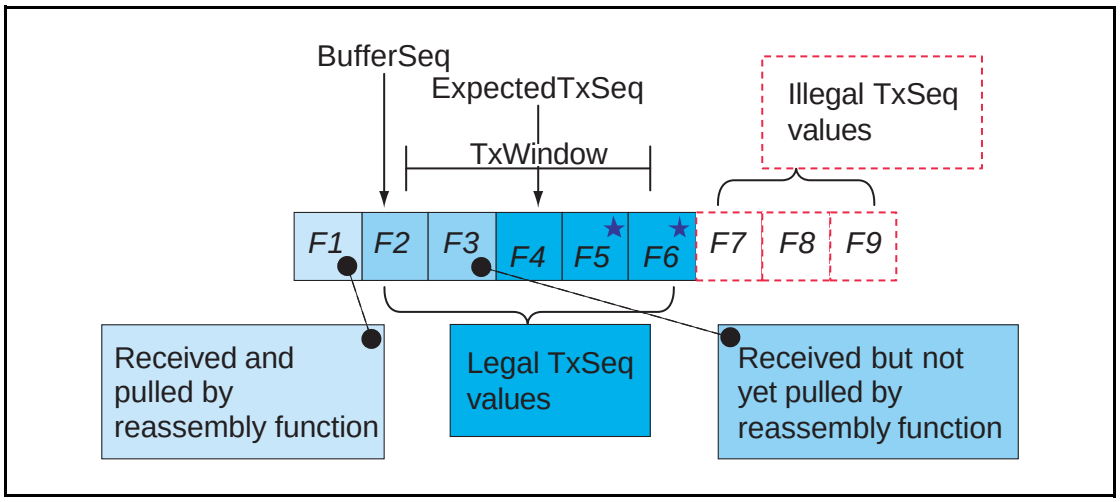

Figure 8.2: Example of the receiver side

Figure 8.2 on page 134 shows TxWindow=5. *F1* is successfully received and pulled by the upper layer. BufferSeq shows that *F2* is the next I-frame to be pulled, and ExpectedTxSeq points to the next I-frame expected from the peer. An I-frame with TxSeq equal to 5 has been received thus triggering an SREJ or REJ exception. The star indicates I-frames received but discarded owing to the SREJ or REJ exception. They will be resent as part of the error recovery procedure.

In Figure 8.2 there are several I-frames in a buffer awaiting the SDU reassembly function to pull them and the TxWindow is full. The receiver would usually disable retransmission in Retransmission mode or Flow Control mode by setting the Retransmission Disable Bit to 1 and send an RR back to the sending side. This tells the transmitting peer that there is no point in performing retransmissions. Both sides will send S-frames to make sure the peer entity knows the current value of the Retransmission Disable Bit.

8.4 RETRANSMISSION MODE

8.4.1 Transmitting frames

A new I-frame shall only be transmitted when the TxWindow is not full. No I-frames shall be transmitted if the last RetransmissionDisableBit (R) received is set to one.

A previously transmitted I-frame may be retransmitted as a result of an error recovery procedure, even if the TxWindow is full. When an I-frame is retransmitted it shall always be sent with the same TxSeq value used in its initial transmission.

The state of the RetransmissionDisableBit (R) is stored and used along with the state of the RetransmissionTimer to decide the actions when transmitting I-frames. The RetransmissionTimer is running whenever I-frames have been sent but not acknowledged.

8.4.1.1 Last received R was set to zero

If the last R received was set to zero, then I-frames may be transmitted. If there are any I-frames which have been sent and not acknowledged then they shall be retransmitted when the RetransmissionTimer elapses. If the retransmission timer has not elapsed then a retransmission shall not be sent and only new I-frames may be sent.

a) If unacknowledged I-frames have been sent and the RetransmissionTimer has elapsed then an unacknowledged I-

frame shall be retransmitted. The RetransmissionTimer shall be restarted.

b) If unacknowledged I-frames have been sent, the Retransmission timer has not elapsed then a new I-frame shall be sent if one is waiting and no timer action shall be taken.

c) If no unacknowledged I-frames have been sent, and a new I-frame is waiting, then the new I-frame shall be sent, the RetransmissionTimer shall be started and if the Monitor Timer is running, it shall be stopped.

d) If no unacknowledged I-frames have been sent and no new I-frames are waiting to be transmitted, and the RetransmissionTimer is running, then the retransmission timer shall be stopped and the monitor timer shall be started.

The table below summarizes actions when the RetransmissionTimer is in use and R=0.

Unacknowledged I-frames sent = Retransmission Timer is running	**Retrans-mission Timer has elapsed**	**New I-frames are waiting**	**Transmit Action**	**Timer Action**
True	True	True or False	Retransmit un-acknowledged I-frame	Restart Retransmission Timer
True	False	True	Transmit new I-frame	No timer action
True	False	False	No transmit action	No Timer action
False	False	True	Transmit new I-frame	Restart Retransmis-sion Timer
False	False	False	No Transmit action	If MonitorTimer is not running then restart MonitorTimer

Table 8.1: Summary of actions when the RetransmissionTimer is in use and R=0.

If the RetransmissionTimer is not in use, no unacknowledged I-frames have been sent and no new I-frames are waiting to be transmitted

a) If the MonitorTimer is running and has not elapsed then no transmit action shall be taken and no timer action shall be taken.

b) If the MonitorTimer has elapsed then an S-frame shall be sent and the MonitorTimer shall be restarted.

If any I-frames become available for transmission then the MonitorTimer shall be stopped, the RetransmissionTimer shall be started and the rules for when the RetransmissionTimer is in use shall be applied.

When an I-frame is sent ReqSeq shall be set to ExpectedTxSeq, TxSeq shall be set to NextTxSeq and NextTxSeq shall be incremented by one.

8.4.1.2 Last received R was set to one

If the last R received was set to one, then I-frames shall not be transmitted. The only frames which may be sent are S-frames. An S-frame shall be sent according to the rules below:

a) If the MonitorTimer is running and has not elapsed then no transmit action shall be taken and no timer action shall be taken.

b) If the MonitorTimer has elapsed then an S-frame shall be sent and the MonitorTimer shall be restarted.

8.4.2 Receiving I-frames

Upon receipt of a valid I-frame with TxSeq equal to ExpectedTxSeq, the frame shall be accepted for the SDU reassembly function. ExpectedTxSeq is used by the reassembly function.

The first valid I-frame received after an REJ was sent, with a TxSeq of the received I-frame equal to ReqSeq of the REJ, shall clear the REJ Exception condition.

The ReqSeq shall be processed according to Section 8.4.6 on page 140.

If a valid I-frame with TxSeq ≠ ExpectedTxSeq is received then an exception condition shall be triggered which is handled according to Section 8.4.7 on page 140.

8.4.3 I-frames pulled by the SDU reassembly function

When the L2CAP layer has removed one or more I-frames from the buffer, BufferSeq may be incremented in accordance with the amount of buffer space released. If BufferSeq is incremented, an acknowledgement shall be sent to the peer entity.

Note: Since the primary purpose of BufferSeq is to prevent buffer overflow, an implementation may choose to set BufferSeq in accordance with how many new incoming I-frames could be stored rather than how many have been removed.

The acknowledgement may either be an RR or an I-frame. The acknowledgement shall be sent to the peer L2CAP entity with ReqSeq equal to BufferSeq. When there are no I-frames buffered for pulling ExpectedTxSeq is equal to BufferSeq.

If the MonitorTimer is active then it shall be restarted to indicate that a signal has been sent to the peer L2CAP entity.

8.4.4 Sending and receiving acknowledgements

Either the MonitorTimer or the RetransmissionTimer shall be active while in Retransmission Mode. Both timers shall not be active concurrently.

8.4.4.1 Sending acknowledgements

Whenever an L2CAP entity transmits an I-frame or an S-frame, ReqSeq shall be set to ExpectedTxSeq or BufferSeq.

8.4.4.2 Receiving acknowledgements

On receipt of a valid S-frame or I-frame, the ReqSeq contained in the frame shall acknowledge previously transmitted I-frames. ReqSeq acknowledges I-frames with a TxSeq up to and including ReqSeq – 1.

The following rules shall be applied:

1. If the RetransmissionDisableBit changed value from 0 to 1 (stop retransmissions) then the receiving entity shall
    a) If the RetransmissionTimer is running then stop it and start the MonitorTimer.
    b) Store the state of the RetransmissionDisableBit received.
2. If the RetransmissionDisableBit changed value from 1 to 0 (start retransmissions) then the receiving entity shall
    a) Store the state of the RetransmissionDisableBit received.
    b) If there are any I-frames that have been sent but not acknowledged, then stop the MonitorTimer and start the RetransmissionTimer.
    c) Any buffered I-frames shall be transmitted according to Section 8.4.1 on page 135.
3. If any unacknowledged I-frames were acknowledged by the ReqSeq contained in the frame, and the RetransmissionDisableBit equals 1 (retransmissions stopped), then the receiving entity shall
    a) Follow the rules in Section 8.4.1 on page 135.
4. If any unacknowledged I-frames were acknowledged by the ReqSeq contained in the frame and the RetransmissionDisableBit equals 0 (retransmissions started) then the receiving entity shall
    a) If the RetransmissionTimer is running, then stop it.
    b) If any unacknowledged I-frames have been sent then the RetransmissionTimer shall be restarted.

c) Follow the rules in Section 8.4.1 on page 135.

d) If the RetransmissionTimer is not running and the MonitorTimer is not running, then start the MonitorTimer.

On receipt of a valid S-frame or I-frame the ReqSeq contained in the frame shall acknowledge previously transmitted I-frames. ExpectedAckSeq shall be set to ReqSeq to indicate that the I-frames with TxSeq up to and including (ReqSeq - 1) have been acknowledged.

8.4.5 Receiving REJ frames

Upon receipt of a valid REJ frame, where ReqSeq identifies an I-frame not yet acknowledged, the ReqSeq acknowledges I-frames with TxSeq up to and including ReqSeq - 1. Therefore the REJ acknowledges all I-frames before the I-frame it is rejecting.

ExpectedAckSeq shall be set equal to ReqSeq to mark I-frames up to and including ReqSeq - 1 as received.

NextTXSeq shall be set to ReqSeq to cause transmissions of I-frames to resume from the point where TxSeq equals ReqSeq.

If ReqSeq equals ExpectedAckSeq then the REJ frame shall be ignored.

8.4.6 Waiting acknowledgements

A counter, TransmitCounter, counts the number of times an L2CAP PDU has been transmitted. This shall be set to 1 after the first transmission. If the RetransmissionTimer expires the following actions shall be taken:

1. If the TransmitCounter is less than MaxTransmit then:

   a) Increment the TransmitCounter

   b) Retransmit the last unacknowledged I-frame, according to Section 8.4.1 on page 135.

2. If the TransmitCounter is equal to MaxTransmit this channel to the peer entity shall be assumed lost. The channel shall move to the CLOSED state and appropriate action shall be taken to report this to the upper layers.

8.4.7 Exception conditions

Exception conditions may occur as the result of physical layer errors or L2CAP procedural errors. The error recovery procedures which are available following the detection of an exception condition at the L2CAP layer in Retransmission Mode are defined in this section.

8.4.7.1 TxSeq Sequence error

A TxSeq sequence error exception condition occurs in the receiver when a valid I-frame is received which contains a TxSeq value which is not equal to the expected value, thus TxSeq is not equal to ExpectedTxSeq.

The TxSeq sequence error may be due to three different causes:

- *Duplicated I-frame*

  The duplicated I-frame is identified by a TxSeq in the range BufferSeq to ExpectedTxSeq – 1 (BufferSeq ≤TxSeq<ExpectedTxSeq). The ReqSeq and RetransmissionDisableBit shall be processed according to Section 8.4.4 on page 139. The Information field shall be discarded since it has already been received.

- *Out-of-sequence I-frame*

  The out-of-sequence I-frame is identified by a TxSeq within the legal range. The ReqSeq and RetransmissionDisableBit shall be processed according to Section 8.4.4 on page 139.

  A REJ exception is triggered, and an REJ frame with ReqSeq equal to ExpectedTxSeq shall be sent to initiate recovery. The received I-frame shall be discarded.

- *Invalid TxSeq*

  An invalid TxSeq value is a value that does not meet either of the above conditions. An I-frame with an invalid TxSeq is likely to have errors in the control field and shall be silently discarded.

8.4.7.2 ReqSeq Sequence error

An ReqSeq sequence error exception condition occurs in the transmitter when a valid S-frame or I-frame is received which contains an invalid ReqSeq value. An invalid ReqSeq is one that is not in the range ExpectedAckSeq ≤ ReqSeq ≤ NextTxSeq.

The L2CAP entity shall close the channel as a consequence of an ReqSeq Sequence error.

8.4.7.3 Timer recovery error

If an L2CAP entity fails to receive an acknowledgement for the last I-frame sent, then it will not detect an out-of-sequence exception condition and therefore will not transmit an REJ frame.

The L2CAP entity that transmitted an unacknowledged I-frame shall, on the expiry of the RetransmissionTimer, take appropriate recovery action as defined in Section 8.4.6 on page 140.

8.4.7.4 Invalid frame

Any frame received which is invalid (as defined in Section 3.3.6 on page 48) shall be discarded, and no action shall be taken as a result of that frame.

8.5 FLOW CONTROL MODE

When a link is configured to work in flow control mode, the flow control operation is similar to the procedures in retransmission mode, but all operations dealing with CRC errors in received packets are not used. Therefore

- REJ frames shall not be used in Flow Control Mode.
- The RetransmissionDisableBit shall always be set to zero in the transmitter, and shall be ignored in the receiver.

The behavior of flow control mode is specified in this section.

Assuming that the TxWindow size is equal to the buffer space available in the receiver (counted in number of I-frames), in flow control mode the number of unacknowledged frames in the transmitter window is always less than or equal to the number of frames for which space is available in the receiver. Note that a missing frame still occupies a place in the window.

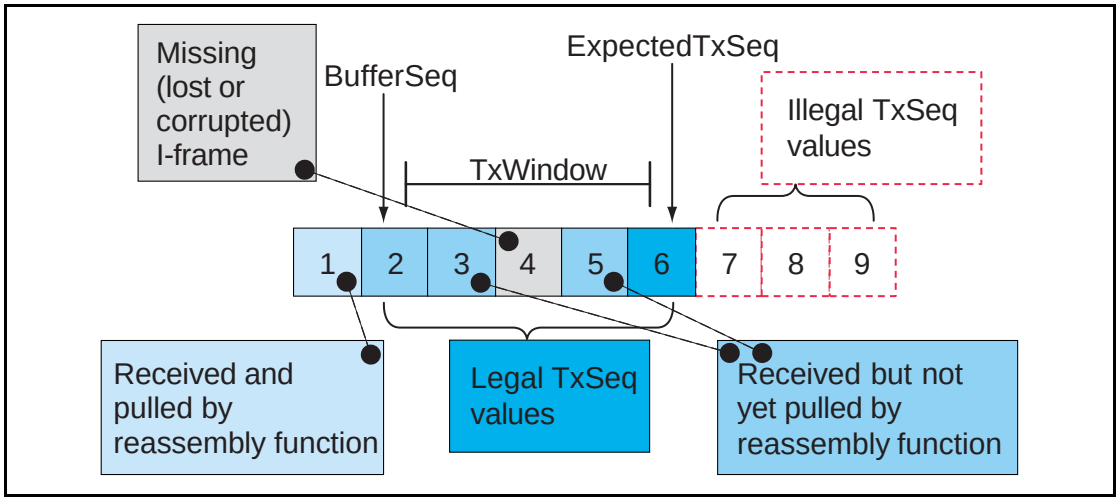

Figure 8.3: Overview of the receiver side when operating in flow control mode

8.5.1 Transmitting I-frames

A new I-frame shall only be transmitted when the TxWindow is not full.

Upon transmission of the I-frame the following actions shall be performed:

- If no unacknowledged I-frames have been sent then the MonitorTimer shall be stopped and the RetransmissionTimer shall be started.
- If any I-frames have been sent and not acknowledged then the RetransmissionTimer remains active and no timer operation is performed.

The control field parameter ReqSeq shall be set to ExpectedTxSeq, TxSeq shall be set to NextTXSeq and NextTXSeq shall be incremented by one.

8.5.2 Receiving I-frames

Upon receipt of a valid I-frame with TxSeq equal to ExpectedTxSeq, the frame shall be made available to the reassembly function. ExpectedTxSeq shall be incremented by one. An acknowledgement shall not be sent until the SDU reassembly function has pulled the I-frame.

Upon receipt of a valid I-frame with an out-of-sequence TxSeq (see Section 8.5.6 on page 144) all frames with a sequence number less than TxSeq shall be assumed lost and marked as missing. The missing I-frames are in the range from ExpectedTxSeq (the frame that the device was expecting to receive) up to TxSeq-1, (the frame that the device actually received). ExpectedTxSeq shall be set to TxSeq +1. The received I-frame shall be made available for pulling by the reassembly function. The acknowledgement shall not occur until the SDU reassembly function has pulled the I-frame. The ReqSeq shall be processed according to Section 8.5.4 on page 143.

8.5.3 I-frames pulled by the SDU reassembly function

When the L2CAP layer has removed one or more I-frames from the buffer, BufferSeq may be incremented in accordance with the amount of buffer space released. If BufferSeq is incremented, an acknowledgement shall be sent to the peer entity. If the MonitorTimer is active then it shall be restarted to indicate that a signal has been sent to the peer L2CAP entity.

Note: Since the primary purpose of BufferSeq is to prevent buffer overflow, an implementation may choose to set BufferSeq in accordance with how many new incoming I-frames could be stored rather than how many have been removed.

The acknowledgement may be an RR or an I-frame. The acknowledgement shall be sent to the peer L2CAP entity with ReqSeq equal to BufferSeq. When there is no I-frame buffered for pulling, ExpectedTxSeq is equal to BufferSeq.

8.5.4 Sending and receiving acknowledgements

One of the timers MonitorTimer or RetransmissionTimer shall always be active while in Flow Control mode. Both timers shall never be active concurrently.

8.5.4.1 Sending acknowledgements

Whenever a data link layer entity transmits an I-frame or a S-frame, ReqSeq shall be set to ExpectedTxSeq or BufferSeq.

8.5.4.2 Receiving acknowledgements

On receipt of a valid S-frame or I-frame the ReqSeq contained in the frame shall be used to acknowledge previously transmitted I-frames. ReqSeq acknowledges I-frames with a TxSeq up to and including ReqSeq – 1.

1. If any outstanding I-frames were acknowledged then
    a) Stop the RetransmissionTimer
    b) If there are still unacknowledged I-frames then restart the RetransmissionTimer, otherwise start the MonitorTimer.
    c) Transmit any I-frames awaiting transmission according to Section 8.5.1 on page 142.

ExpectedAckSeq shall be set to ReqSeq to indicate that the I-frames with TxSeq up to and including ExpectedAckSeq have been acknowledged.

8.5.5 Waiting acknowledgements

If the RetransmissionTimer expires the following actions shall be taken:
The I-frame supervised by the RetransmissionTimer shall be considered lost, and ExpectedAckSeq shall be incremented by one.

1. If I-frames are waiting to be sent
    a) The RetransmissionTimer is restarted
    b) I-frames awaiting transmission are transmitted according to Section 8.5.1 on page 142.
2. If there are no I-frames waiting to be sent
    a) If there are still unacknowledged I-frames the RetransmissionTimer is restarted, otherwise the MonitorTimer is started.

8.5.6 Exception conditions

Exception conditions may occur as the result of physical layer errors or L2CAP procedural errors. The error recovery procedures which are available following the detection of an exception condition at the L2CAP layer in flow control only mode are defined in this section.

8.5.6.1 TxSeq Sequence error

A TxSeq sequence error exception condition occurs in the receiver when a valid I-frame is received which contains a TxSeq value which is not equal to the expected value, thus TxSeq is not equal to ExpectedTxSeq.

The TxSeq sequence error may be due to three different causes:

- *Duplicated I-frame*

  The duplicated I-frame is identified by a TxSeq in the range BufferSeq to ExpectedTxSeq – 1. The ReqSeq shall be processed according to Section 8.5.4 on page 143. The Information field shall be discarded since it has already been received.

- *Out-of-sequence I-frame*

  The out-of-sequence I-frame is identified by a TxSeq within the legal range ExpectedTxSeq < TxSeq < (BufferSeq + TxWindow). The ReqSeq shall be processed according to Section 8.5.4 on page 143.

  The missing I-frame(s) are considered lost and ExpectedTXSeq is set equal to TxSeq+1 as specified in Section 8.5.2 on page 143. The missing I-frame(s) are reported as lost to the SDU reassembly function.

- *Invalid TxSeq*

  An invalid TxSeq value is a value that does not meet either of the above conditions and TxSeq is not equal to ExpectedTxSeq. An I-frame with an invalid TxSeq is likely to have errors in the control field and shall be silently discarded.

8.5.6.2 ReqSeq Sequence error

An ReqSeq sequence error exception condition occurs in the transmitter when a valid S-frame or I-frame is received which contains an invalid ReqSeq value. An invalid ReqSeq is one that is not in the range ExpectedAckSeq ≤ ReqSeq ≤ NextTXSeq.

The L2CAP entity shall close the channel as a consequence of an ReqSeq Sequence error.

An L2CAP entity that fails to receive an acknowledgement for an I-frame shall, on the expiry of the RetransmissionTimer, take appropriate recovery action as defined in Section 8.5.5 on page 144.

8.5.6.3 Invalid frame

Any frame received that is invalid (as defined in Section 3.3.6 on page 48) shall be discarded, and no action shall be taken as a result of that frame, unless the receiving L2CAP entity is configured to deliver erroneous frames to the layer above L2CAP. In that case, the data contained in invalid frames may also be added to the receive buffer and made available for pulling from the SDU reassembly function.

8.6 ENHANCED RETRANSMISSION MODE

Enhanced Retransmission mode operates as an HDLC balanced data link operational mode. Either L2CAP entity may send frames at any time without receiving explicit permission from the other L2CAP entity. A transmission may contain single or multiple frames and shall be used for I-frame transfer and/or to indicate status change.

8.6.1 Function Of PDU Types

Enhanced Retransmission mode uses I-frames to transfer upper layer information and S-frames for supervision. There are four S-frames defined: Receiver Ready (RR), Reject (REJ), Receiver Not Ready (RNR), and Selective Reject (SREJ). All frames formats in Enhanced Retransmission mode shall use the Enhanced Control Field.

8.6.1.1 Receiver Ready (RR)

The RR frame shall be used by an L2CAP entity to

1. Indicate that it is ready to receive I-frames
2. Acknowledge previously received I-frames numbered up to ReqSeq –1 inclusive.

An RR with P-bit set to 1 (P=1) is used to indicate the clearance of any busy condition that was initiated by an earlier transmission of an RNR frame by the same L2CAP entity.

8.6.1.2 Reject (REJ)

The REJ frame shall be used by an L2CAP entity to request retransmission of I-frames starting with the frame numbered ReqSeq. I-frames numbered ReqSeq –1 and below shall be considered acknowledged. Additional I-frames awaiting initial transmission may be transmitted following the retransmitted I-frame(s) up to the TxWindow size of the receiver.

At most only one REJ exception from a given L2CAP entity to another L2CAP entity shall be established at any given time. A REJ frame shall not be transmitted until an earlier REJ exception condition or all earlier SREJ exception conditions have been cleared. The REJ exception condition shall be cleared upon the receipt of an I-frame with TxSeq equal to the ReqSeq of the REJ frame.

Two L2CAP entities may be in REJ exception conditions with each other at the same time.

8.6.1.3 Receiver Not Ready (RNR)

The RNR frame shall be used by an L2CAP entity to indicate a busy condition (i.e. temporary inability to receive I-frames). I-frames numbered up to ReqSeq –1 inclusive shall be considered acknowledged. The I-frame numbered ReqSeq and any subsequent I-frames sent shall not be considered acknowledged. The acceptance status of these I-frames shall be indicated in subsequent transfers.

8.6.1.4 Selective Reject (SREJ)

The SREJ frame shall be used by an L2CAP entity to request retransmission of one I-frame. The ReqSeq shall indicate the TxSeq of the earliest I-frame to be retransmitted (not yet reported by a SREJ). If the P-bit is set to 1 then I-frames numbered up to ReqSeq -1 inclusive shall be considered acknowledged. If the P-bit is set to 0 then the ReqSeq field in the SREJ shall not indicate acknowledgement of I-frames.

Each SREJ exception condition shall be cleared upon receipt of an I-frame with TxSeq equal to the ReqSeq sent in the SREJ frame.

An L2CAP entity may transmit one or more SREJ frames with the P=0 before one or more earlier SREJ exception conditions initiated with SREJ(P=0) have been cleared. An L2CAP entity shall not transmit more than one SREJ with P=1 before all earlier SREJ exception conditions have been cleared. A SREJ frame shall not be transmitted if an earlier REJ exception condition has not been cleared. Likewise a REJ frame shall not be transmitted if one or more SREJ exception conditions have not been cleared. Only one I-frame shall be retransmitted in response to receiving a SREJ frame with P= 0. Additional I-frames awaiting initial transmission may be transmitted following the retransmission of the specific I-frame requested by SREJ with P=1.

8.6.1.5 Functions of the Poll (P) and Final (F) bits.

P-bit set to 1 shall be used to solicit a response frame with the F-bit set to 1 from the remote L2CAP entity at the earliest respond opportunity. At most only one frame with a P=1 shall be outstanding in a given direction at a given time. Before an L2CAP entity issues another frame with P=1, it shall have received a response frame from the remote L2CAP entity with F=1. If no valid frame is received with F=1 within Monitor time-out period, the frame with P=1 may be retransmitted.

The Final bit shall be used to indicate the frame as a response to a soliciting poll (S-frame with P=1). The frame with F=1 shall not be retransmitted. The Monitor-timeout is not used to monitor lost frames with F=1. Additional frames with F=0 may be transmitted following the frame with F=1.

S-frames shall not be transmitted with both the F-bit and the P-bit set to 1 at the same time.

8.6.2 Rules For Timers

Timers are started upon transmission of a packet. Timers should be started when the corresponding packet leaves the controller (transmitted or flushed). If the timer is not started when the packet leaves the controller then it shall be started when the packet is delivered to the controller. The specific rules for the BR/EDR controller and AMP controllers are described in the following sections.

8.6.2.1 Timer Rules for BR/EDR Controller

If a flush timeout does not exist on the BR/EDR link for the channel using Enhanced Retransmission mode then the value for the Retransmission time-out shall be at least two seconds and the value for the Monitor time-out shall be at least twelve seconds. If a flush timeout exists on the link for Enhanced Retransmission mode then the value for the Retransmission time-out shall be the larger of:

- The value of the flush timeout multiplied by three
- one second

If a flush timeout exists on the link for Retransmission mode and both sides of the link are configured to the same flush timeout value then the monitor time-out shall be set to a value at least as large as the Retransmission time-out otherwise the value of the Monitor time-out shall be the larger of:

- the value of the flush timeout multiplied by six
- twelve seconds

If an L2CAP entity knows that a specific packet has been flushed instead of transmitted then it may execute proper error recovery procedures immediately.

When configuring a channel over a BR/EDR controller the values sent in a Configuration Request packet for Retransmission timeout and Monitor timeout shall be 0.

Note: If the link has a flush timeout and the Non-Flushable Packet Boundary Flag feature is used to mark the Enhanced Retransmission mode packets as non-flushable then the link does not have a flush timeout with regards to Enhanced Retransmission mode.

8.6.2.2 Timer Rules for AMP Controllers

AMP controllers can be classified by their behavior as follows:

1. Attempt to send a packet until LSTO disconnects the physical link.
2. Attempt to send a packet until a Controller based retry counter is exceeded whereupon the packet is flushed.

Class 1 AMP controllers are reliable. They will not lose packets though packets can be lost during a move operation. Class 2 AMP controllers are not reliable and can lose packets. The Best Effort Flush Timeout field in the AMP Info (see [Vol. 2] Part E, Section 7.5.8) can be used to determine the behavior of the controller (i.e. class 1 or class 2). If the Best Effort Flush Timeout field in the AMP info is 0xFFFFFFFF then the class is 1 otherwise the class is 2. The Best Effort Flush Timeout field indicates the flush timeout that may be set on the Best Effort logical link.

For class 1 AMP controllers the Retransmission and Monitor timers are not really needed. Packets should not be lost. Packets lost during the move operation will be detected by L2CAP and retransmitted as part of the move operation. Therefore, the Retransmission timeout and Monitor timeout shall be at least the value of the Link supervision timeout set on the link or can be turned off altogether. The values sent in a Configuration Request packet for Retransmission timeout and Monitor timeout shall be 0.

When configuring a channel over a class 2 AMP Controller non-0 values for Retransmission timeout and Monitor timeout shall be sent in a Configuration Request packet. The non-0 values specify the “processing” time of received packets. Processing time includes the time it takes for a received packet to be passed from the device's Controller to the L2CAP layer plus the time to be processed by the L2CAP layer and a response submitted back to the Controller. The local device's processing time is used by the remote device in calculating the Retransmission timeout and Monitor timeout it will use. The timeout values that will actually be used by a device shall be sent in a Configuration Response packet.

As with BR/EDR controllers, the method used for setting timer values for class 2 AMP Controllers depends on when timers are started. Timers are either started when the packet leaves the controller or when the packet is delivered to the controller.

The timeout values used for Class 2 AMP Controllers where timers are started when the packet leaves the controller shall be at least the values received in the Configuration Request packet from the remote device (remote device's “processing” time).

For Class 2 AMP Controller where timers are started when the packet is delivered to the Controller the following rules shall be used:

1. The local L2CAP Entity shall set a flush timeout on the Best Effort logical link equal to the value provided by the local Controller in the Best Effort Flush Timeout field of AMP info structure.
2. The value of the Retransmission timeout and Monitor Timeout shall be the value of the flush timeout multiplied by three plus the corresponding processing time received in the Configuration Request packet from the remote device.

If an L2CAP entity knows that a specific packet has been flushed instead of transmitted then it may execute proper error recovery procedures immediately.

8.6.2.3 Timer Values used After a Move Operation

When a channel is moved from one Controller to another Controller the timeout values used after the move operation are based on the capabilities of the new Controller. The timeout values shall be set according to the following table:

Controller	Timeout Values
BR/EDR	Retransmission timeout – at least 2 seconds Monitor timeout – at least 12 seconds
Class 1 AMP Controller	Retransmission timeout – at least LSTO (or turned off) Monitor timeout – at least LSTO (or turned off)
Class 2 AMP Controller where timers are started when packets leave the controller	Retransmission timeout – at least 500ms Monitor timeout – at least 500ms Note: 500ms is the default value for the “processing” time of received packets.
Class 2 AMP Controller where timers are started when packets are delivered to the controller	Retransmission timeout – at least (local controller "Best Effort” Flush Timeout * 3) + 500ms Monitor timeout – at least (local controller "Best Effort” Flush Timeout * 3) + 500ms Note: 500ms is the default value for the "processing" time of received packets

Table 8.2: AMP Controller timeout values

When moving to a Class 2 AMP Controller, the Retransmission Timeout and Monitor timeout should be reconfigured after the move operation to get the actual value for the "processing" time of received packets.

8.6.3 General Rules for the State Machine

Enhanced Retransmission mode is specified using a pair of state machines, a Transmitter state machine and a Receiver state machine. The following rules apply to the state machine pair.

1. The state machine pair is informative but described using normative text in order to clearly specify the behavior of the protocol. Designers and implementers may choose any design / implementation technique they wish, but it shall behave in a manner identical to the external behavior of the specified state machines.
2. There is a single state machine pair for each active L2CAP channel configured to use Enhanced Retransmission mode.
3. Variables are used to limit the number of states by maintaining the state of particular conditions. The variables are defined in section 8.6.5.2.
4. For some combinations of Event and Condition, the state tables provide alternative groups of actions. These alternatives are separated by horizontal lines in the Actions and Next State columns. The alternatives are mutually exclusive; selection of an alternate is done based upon (i) local status, (ii) a layer management action, or (iii) an implementation decision. There is no relationship between the order of the alternatives between events, nor is it implied that the same alternative must be selected every time the event occurs.

5. The state tables use timers. Any Start Timer action restarts the specified timer from its initial value, even if the timer is already running. When the timer reaches 0 the appropriate timer expired event is set and the timer stops. The Stop Timer action stops a timer if it is running.
6. Events not recognized in a particular state are assumed to remain pending until any masking flag is modified or a transition is made to a state where they can be recognized.
7. Some state transitions and actions are triggered by internal events (e.g. requests from the upper layer). It is implementation specific how these internal events are realized. They are used for clarity in specifying the state machine. All events including Internal events are described in Section 8.6.5.3 on page 153.
8. The state machines specify the exact frames to be sent by transmitters but are relaxed on what receivers are allowed to accept as valid. For example there are cases where the transmitter is required to send a frame with P=1. The correct response is a frame with F=1 but in some cases the receiver is allowed to accept a frame with F=0 in addition to F=1.

8.6.4 State Diagram

The state diagram shows the states and the main transitions. Not all events are shown on the state diagram.

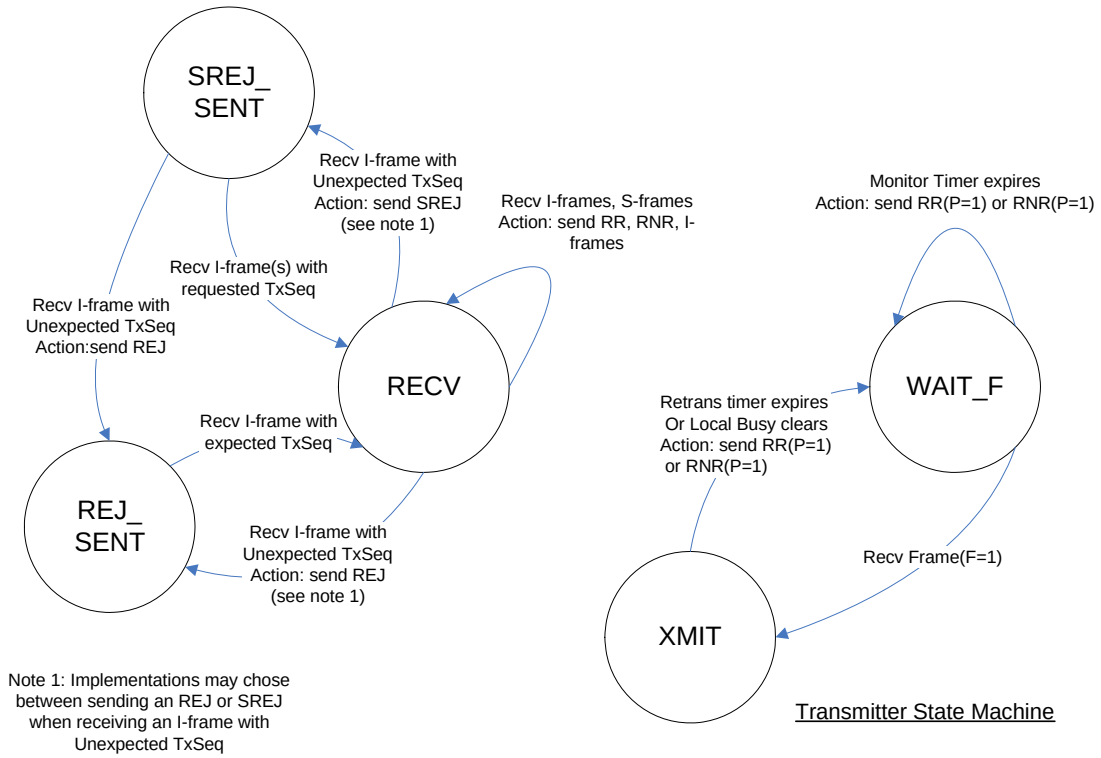

Figure 8.4: Receiver state machine

8.6.5 States Tables

8.6.5.1 State Machines

Enhanced Retransmission mode is described as a pair of state machine. The Receiver state machine handles all received frames while the Transmitter State machine handles all asynchronous events including requests from the upper layer and the expiration of timers.

The Receiver state machine "calls" the Transmitter state machine using the PassToTx action. This shows up in the Transmitter state machine as an event. When the Transmitter state machine is called it runs to completion before returning to the Receiver state machine. Running to completion means that all actions are executed and the Transmitter state is changed to the new state.

The Receiver and Transmitter state machine share variables and timers.

8.6.5.2 States

The following states have been defined to specify the protocol; the actual number of states and naming in a given implementation is outside the scope of this specification:

RECV—This is the main state of the Receiver state machine.

REJ_SENT—The L2CAP entity has sent a REJ frame to cause the remote L2CAP entity to resend I-frame(s). The L2CAP entity is waiting for the I-frame with a TxSeq that matches the ReqSeq sent in the REJ. Whether to send a REJ versus a SREJ is implementation dependent.

SREJ_SENT—The L2CAP entity has sent one or more SREJ frames to cause the remote L2CAP entity to resend missing I-frame(s). The local L2CAP entity is waiting for all requested I-frames to be received. If additional missing I-frames are detected while in SREJ_SENT then additional SREJ frames or a REJ frame can be sent to request those I-frames. Whether to send a SREJ versus a REJ is implementation dependent.

XMIT—This is the main state of the Transmitter state machine.

WAIT_F—Local busy has been cleared or the Retransmission timer has expired and an S-frame with P=1 has been sent. The local L2CAP entity is waiting for a frame with F=1. I-frames cannot be sent while in the WAIT_F state to prevent the situation where retransmission of I-frames could result in the channel being disconnected.

8.6.5.3 Variables and Timers

Variables are used to limit the number of states and help clarify the state chart tables. Variables can be set to values, evaluated in conditions and compared in conditional statements. They are also used in the action descriptions. Below is a list of the operators, connectives and statements that can be used with variables.

Operator, connective or statement	Description
:=	Assignment operator. Used to set a variable to a value
=	Relational operator "equal"
>	Relational operator "greater than".
<	Relational operator "less than"
≥	Relational operator "greater than or equal"
≤	Relational operator "less than or equal"
+	Arithmetic operator "plus"
mod	Modulo operator - returns the remainder of division of one number by another.
and	logical connective "and". It returns TRUE if both operands are TRUE otherwise it returns FALSE.
or	logical connective "or". It returns TRUE if either of its operands are TRUE otherwise it returns FALSE.
if (expresson) **then** statement	Conditional Statement. If expression is TRUE then the statement is executed otherwise the statement is not executed. The statement is composed of one or more actions. All the actions in the statement are indented under the **if** … **then** clause.
if (expresson) **then** statement1 **else** statement2	Conditional Statement. If expression is TRUE then statement1 is executed otherwise statement2 is executed. A statement is composed of one or more actions. All the actions in the statement1 are indented under the **if** … **then** clause and all the actions of statement2 are indented under the else clause.

Table 8.3: Enhanced Retransmission mode uses the following variables and sequence numbers described in Section 8.3

- TxSeq
- NextTxSeq
- ExpectedAckSeq
- ReqSeq
- ExpectedTxSeq

- BufferSeq

In addition to the variables above the following variables and timers are used.

RemoteBusy—when set to TRUE RemoteBusy indicates that the local L2CAP entity has received an RNR from the remote L2CAP entity and considers the remote L2CAP entity as busy. When the remote device is busy it will likely discard I-frames sent to it. The RemoteBusy flag is set to FALSE when the local L2CAP Entity receives an RR, REJ or SREJ. When set to FALSE the local L2CAP entity considers the remote L2CAP entity able to accept I-frames. When the channel is created RemoteBusy shall be set to FALSE.

LocalBusy—when set to TRUE, LocalBusy indicates the local L2CAP entity is busy and will discard received I-frames. When set to FALSE the local L2CAP entity is not busy and is able to receive I-frames. When the channel is created LocalBusy shall be set to FALSE.

UnackedFrames—holds the number of unacknowledged I-frames. When the channel is created UnackedFrames shall be set to 0.

UnackedList—holds the unacknowledged I-frames so they can be retransmitted if necessary. I-frames in the list are accessed via their TxSeq number. For example UnackedList[5] accesses the I-frame with TxSeq 5.

PendingFrames—holds the number of pending I-frames. I-frames passed to L2CAP from the upper layer may not be able to be sent immediately because the remote L2CAP entity's TxWindow is full, is in a busy condition or the local L2CAP is in the incorrect state. When I-frames cannot be sent they are stored in a queue until conditions allow them to be sent. When the channel is created PendingFrames shall be set to 0.

SrejList—is a list of TxSeq values for I-frames that are missing and need to be retransmitted using SREJ. A SREJ has already been sent for each TxSeq on the list. When SrejList is empty it equals 0 (i.e. SrejList = 0). If SrejList is not empty it is greater than 0 (i.e. SrejList > 0).

RetryCount—holds the number of times an S-frame operation is retried. If an operation is tried MaxTransmit times without success the channel shall be closed.

RetryIframes[]—holds a retry counter for each I-frame that is sent within the receiving device's TxWindow. Each time an I-frame is retransmitted the corresponding counter within RetryIFrames is incremented. When an attempt to retransmit the I-frame is made and the counter is equal to MaxTransmit then the channel shall be closed.

RNRsent—when set to TRUE it means that the local L2CAP entity has sent an RNR frame. It is used to determine if the L2CAP entity needs to send an RR to the remote L2CAP entity to clear the busy condition. When the channel is created RNRsent shall be set to FALSE.

RejActioned—is used to prohibit a frame with F=1 from causing I-frames already retransmitted in response to a REJ from being retransmitted again. RejActioned is set to TRUE if a received REJ is actioned when a frame sent with P=1 is unanswered. When the channel is created RejActioned shall be set to FALSE.

SrejActioned—is used in conjunction with SrejSaveReqSeq to prohibit a frame with F=1 from causing an I-frame already retransmitted in response to a SREJ from being retransmitted again. SrejActioned is set to TRUE if a received SREJ is actioned when a frame sent with P=1 is unanswered. When the channel is created SrejActioned shall be set to FALSE.

SrejSaveReqSeq—is used to save the ReqSeq of a SREJ frame that causes SrejActioned to be set to TRUE.

SendRej—when set to TRUE it indicates that the local L2CAP entity has determined that a REJ should be sent in the SREJ_SENT state while processing received I-frames. The sending of new SREJ frames is stopped. When the channel is created SendRej shall be set to FALSE.

BufferSeqSrej—is used while in the SREJ_SENT state to keep track of the value to which BufferSeq will be set upon exit of the SREJ_SENT state.

FramesSent—is used to keep track of the number I-frames sent by the Send-Data and Retransmit-I-frames actions.

MaxTxWin—contains the maximum window size plus 1. It is used in TxWindow modulo operations as the divisor and in state table conditions. This value shall be set to 16384 (0x4000) if the Extended Window Size option is used; otherwise it shall be set to 64.

RetransTimer—The Retransmission Timer is used to detect lost I-frames. When the channel is created the RetransTimer shall be off.

MonitorTimer—The Monitor Timer is used to detect lost S-frames. When the channel is created the MonitorTimer shall be off.

8.6.5.4 Events

Data-Request—The upper layer has requested that an SDU be sent. The SDU may need to be broken into multiple I-frames by L2CAP based on the MPS of the remote device and/or the maximum PDU allowed by the HCI or QoS requirements of the system.

Local-Busy-Detected—A local busy condition occurs when the local L2CAP entity is temporarily unable to receive, or unable to continue to receive, I-frames due to internal constraints. For example, the upper layer has not pulled received I-frames and the local L2CAP entity needs to send an acknowledgment to the remote L2CAP entity. The method for handling the detection of

local busy is implementation specific. An implementation may wait to send an RNR to see if the busy condition will clear before the remote L2CAP entity's Retransmission timer expires. If the busy condition clears then frames can be acknowledged with an RR or I-frame. If the busy condition does not clear before the remote L2CAP entity's Retransmission timer expires then an RNR shall be sent in response to the RR or RNR poll sent by the remote L2CAP entity. Optionally an implementation may send an RNR as soon as the local busy condition is detected.

Local-Busy-Clear—The local busy condition clears when L2CAP has buffer space to receive more I-frames (i.e. SDU Reassembly function and/or upper layer has pulled I-frames) and if necessary the upper layer has cleared the busy condition.

Recv ReqSeqAndFbit—This is an event generated by the Receiver state machine. It contains the ReqSeq and F-bit value of a received frame. The value of the F-bit can be checked in a condition.

Recv Fbit—This is an event generated by the Receiver state machine. It contains the F-bit value of a received frame. The value of the F-bit can be checked in a condition.

RetransTimer-Expires—The Retransmission Timer has counted to down to 0 and stopped.

MonitorTimer-Expires—The Monitor Timer has counted down to 0 and stopped.

Recv I-frame—Receive an I-frame with any value for the F-bit.

Recv RR, REJ, RNR, SREJ (P=x) or **(F=x)**—Receive a specific S-frame (RR, REJ, etc.) with a specific value for the P and/or F bit. The F-bit and the P-bit shall not both be set to 1 in a transmitted S-frame so received S-frames with both P and F set to 1 should be ignored. If the P and/or F bit value is not specified in the event then either value is accepted.

Recv RRorRNR—Receive an RR or RNR with any value for the P-bit and F-bit.

Recv REJorSREJ—Receive an REJ or SREJ with any value for the P-bit and F-bit.

Recv frame—This is catch-all for all frames that are not explicitly declared as events in the state table.

8.6.5.5 Conditions

RemoteBusy = TRUE or FALSE—TRUE indicates the remote L2CAP entity is in a busy condition and FALSE indicates the remote L2CAP entity is not busy.

LocalBusy = TRUE or FALSE—TRUE indicates the local L2CAP entity is in a busy condition and FALSE indicates the local L2CAP entity is not busy.

RemWindow-Not-Full—The number of unacknowledged I-frames sent by L2CAP has not yet reached the TxWindow size of the remote L2CAP entity.

RemWindow-Full—The number of unacknowledged I-frames sent by the L2CAP entity has reached the TxWindow size of the remote L2CAP entity. No more I-frames shall be sent until one or more I-frames have been acknowledged.

RNRsent = TRUE or FALSE—**TRUE** indicates an RNR has been sent while a local busy condition exists. It is set to FALSE when the local busy condition clears.

F = 0 or 1—the F-bit of a received frame is checked. The F-bit of the received frame is available as part of the Recv ReqSeqAndFbit and Recv Fbit events.

RetryIframes[i] < or ≥ **MaxTransmit**—Compare the appropriate counter in RetryIframes after processing the ReqSeq in the receive frame to determine if it has reached MaxTransmit or not.

RetryCount < or ≥ **MaxTransmit**—Compare RetryCount to determine if it has reached MaxTransmit or not.

With-Expected-TxSeq—The TxSeq of a received I-frame is equal to ExpectedTxSeq.

With-Valid-ReqSeq—The ReqSeq of the received frame is in the range ExpectedAckSeq ≤ ReqSeq < NextTxSeq.

With-Valid-ReqSeq-Retrans—The ReqSeq of the received frame is in the range ExpectedAckSeq ≤ ReqSeq < NextTxSeq.

With-Valid-F-bit —The F-bit of a received frame is valid if it is 0 or if it is 1 and a frame sent with P=1 by the local L2CAP entity is unanswered (i.e. the local L2CAP entity send a frame with P=1 and has not yet received a frame with F=1 until receiving this one). If the Transmitter state machine is in the WAIT_F state then a frame sent with P=1 is unanswered.

With-unexpected-TxSeq—The TxSeq of the received I-frame is within the TxWindow of the L2CAP entity receiving the I-frame but has a TxSeq "greater" than ExpectedTxSeq where "greater" means later in sequence than ExpectedTxSeq.

With-duplicate-TxSeq—The TxSeq of the received I-frame is within the TxWindow of the L2CAP entity receiving the I-frame but has a TxSeq "less" than ExpectedTxSeq where "less" means earlier in the sequence than ExpectedTxSeq. In other words this is a frame that has already been received.

With-Invalid-TxSeq—The TxSeq of the received I-frame is not within the TxWindow of the L2CAP entity receiving the frame.

With-Invalid-ReqSeq—The ReqSeq of the received frame is not in the range ExpectedAckSeq ≤ ReqSeq < NextTxSeq.

With-Invalid-ReqSeq-Retrans—The ReqSeq of the received frame is not in the range ExpectedAckSeq ≤ ReqSeq < NextTxSeq.

Not-With-Expected-TxSeq—The TxSeq of the received I-frame is within the TxWindow of the L2CAP entity receiving the frame but is not equal to ExpectedTxSeq. It is either unexpected or a duplicate.

With-Expected-TxSeq-Srej—The TxSeq of the received I-frame is equal to the TxSeq at the head of SrejList.

SendRej = TRUE or FALSE—**TRUE** indicates that a REJ will be sent after all frames requested using SREJ have been received.

SrejList = or > 1—Determine if the number of items in SrejList is equal to or greater than 1.

With-Unexpected-TxSeq-Srej—The TxSeq of the received I-frame is equal to one of the values stored in SrejList but is not the TxSeq at the head. This indicates that one or more I-frames requested using SREJ are missing either because the SREJ was lost or the requested I-frame(s) were lost. Either way the SREJ frames must be resent to retrieve the missing I-frames.

With-duplicate-TxSeq-Srej—The TxSeq of the received I-frame is equal to a TxSeq of one of the saved I-frames indicating it is a duplicate.

8.6.5.6 Actions

Send-Data—This action is executed as a result of a Data-Request event. The number of I-frames sent without being acknowledged shall not exceed the TxWindow size of the receiving L2CAP entity (UnackedFrames is less than or equal to the remote L2CAP entity's TxWindow). Any I-frames that cannot be sent because they would exceed the TxWindow size are queued for later transmission. For each I-frame the following actions shall be carried out:

Send I-frame with TxSeq set to NextTxSeq and ReqSeq set to BufferSeq.

UnackedList[NextTxSeq] := I-frame

UnackedFrames := UnackedFrames + 1

FramesSent := FramesSent + 1

RetryIframes[NextTxSeq] := 1

NextTxSeq := (NextTxSeq + 1) mod MaxTxWin

Start-RetransTimer

Pend-Data—This action is executed as a result of a Data-Request when it is not possible to send I-frames because the window is full, the remote L2CAP entity is in a busy condition or the local L2CAP entity is not in a state where I-frames can be sent (e.g. WAIT_F). The I-frame(s) are queued for later transmission.

Process-ReqSeq—the ReqSeq contained in the received frame shall acknowledge previously transmitted I-frames. ExpectedAckSeq shall be set to ReqSeq to indicate that the I-frames with TxSeq up to and including (ReqSeq—1) have been acknowledged. The acknowledged I-frames shall be removed from UnackedList, the retry counters for each acknowledged frame shall be set to 0 and the number of acknowledged frames shall be subtracted from UnackedFrames so that UnackedFrames shall contain the number of the remaining unacknowledged I-frames. Pending I-frames are now available to be transmitted by the Send-Ack action. If UnackedFrames equals 0 then Stop-RetransTimer.

Send RR, RNR (P=x) or (F=x)—Send the specified S-frame with the specified value for the P-bit or F-bit. If a value for the P-bit or F-bit is not specified the value shall be 0. For example Send RR(P=1) means send an RR with the P-bit set to 1 and the F-bit set to 0. The ReqSeq field shall be set to BufferSeq. If an RNR is sent, RNRsent shall be set to TRUE.

Send REJ (P =x) or (F=x)—Send a REJ with the specified value for the P-bit or F-bit. The ReqSeq field shall be set to ExpectedTxSeq. If a value for the P-bit or F-bit is not specified the value shall be 0. Note that this will acknowledge previously received I-frames up to ExpectedTxSeq—1 and may allow the remote L2CAP entity to transmit new I-frames. If the local L2CAP entity is not in a position to acknowledge the previously received I-frames it may use SREJ(P=0) or RNR. It may also wait to send the REJ until it is able to acknowledge the I-frames.

Send RRorRNR (P=x) or (F=1)—Send an RR or RNR with the specified value for the P-bit or F-bit based on the value of LocalBusy. If a value for the P-bit or F-bit is not specified the value shall be 0. An RNR shall be sent if LocalBusy equals TRUE. If LocalBusy equals FALSE then an RR shall be sent.

Send IorRRorRNR(F=1)—Send I-frames, an RR or an RNR with the F-bit set to 1. The following algorithm shall be used:

```
FramesSent:=0
    if LocalBusy = TRUE then
        Send RNR(F=1)
    if RemoteBusy = TRUE and UnackedFrames   > 0
    then
        Start-RetransTimer
    Send-Pending-I-frames(see note)
    if LocalBusy = FALSE and FramesSent = 0 then
         Send RR(F=1)
```

Note: The SendIorRRorRNR(F=1) sends frames by invoking other actions. During the execution of SendIorRRorRNR multiple actions may be invoked. The first action invoked shall send the first or only frame with the F-bit set to 1. All other frames sent shall have the F-bit set to 0.

Send SREJ—Send one or more SREJ frames with P=0. For each missing I-frame starting with ExpectedTxSeq up to but not including the TxSeq of the received I-frame, an SREJ frame is sent with ReqSeq set to the TxSeq of the missing frame. The TxSeq is inserted into the tail of SrejList. For example if ExpectedTxSeq is 3 and the received I-frame has a TxSeq of 5 there are two missing I-frames. An SREJ with ReqSeq 3 is sent followed by an SREJ with ReqSeq 4. TxSeq 3 is inserted first into SrejList followed by TxSeq 4. After all SREJ frames have been sent ExpectedTxSeq shall be set to the TxSeq of the received I-frame + 1 mod MaxTxWin.

Send SREJ(SrejList)—Send one or more SREJ frames with P=0. An I-frame was received that matches one of the TxSeq values in the SrejList but does not match the head of SrejList. This means I-frames requested via SREJ are still missing. For each TxSeq value starting with the head of SrejList and going backwards (i.e., from the head towards the tail) through the SrejList up to but not including the TxSeq of the received frame, an SREJ frame is sent with ReqSeq set to the TxSeq from SrejList. The TxSeq is removed from SrejList and reinserted into the tail of SrejList. Finally, remove the TxSeq of the received frame from the head of the list.

Send SREJ(SrejList-tail)(F=1)—Send a SREJ frame with F=1 and ReqSeq equal to the TxSeq at the tail of SrejList.

Start-RetransTimer—If the Monitor timer is not running then start the Retransmission Timer from its initial value (see Retransmission time-out in Section 5.4). If the Retranmission timer is already running it is restarted from its initial value. If the Monitor timer is running then the Retransmission timer is not started.

Start-MonitorTimer—Start the Monitor Timer from its initial value (see Monitor time-out in Section 5.4 on page 78). If the timer is already running it is restarted from its initial value.

PassToTx—Pass the ReqSeq and F-bit value of a received frame to the Transmitter state machine. This will show up as a Recv ReqSeqAndFbit event in the Transmitter state machine.

PassToTxFbit—Pass the F-bit value of a received frame to the Transmitter state machine. This will show up as a Recv Fbit event in the Transmitter state machine.

Data-Indication—A received I-frame is passed to the SDU reassembly function. For the purpose of the state machine this operation is completed immediately so the Send_Ack action should be executed as one of the next actions. In some cases the SDU reassembly function cannot accept the I-frame so the I-frame will be stored within the L2CAP Entity consuming a portion of its TxWindow. When the I-frame is pulled by the SDU reassembly function the Send_Ack action should be executed. Before the Send_Ack action is executed BufferSeq is advanced as follows:

BufferSeq := (BufferSeq + 1) mod MaxTxWin

Increment-ExpectedTxSeq—ExpectedTxSeq is incremented as follows:

ExpectedTxSeq := (ExpectedTxSeq + 1) mod MaxTxWin

Stop-RetransTimer—the Retransmission timer is stopped.

Stop-MonitorTimer —the Monitor timer is stopped.

Send-Ack (F=x)—an acknowledgement with the specified value for the F-bit may be sent. Note that this action may occur in an action block with other actions that also send frames. If a frame has already been sent then it is not necessary to send additional frames. If the value for the F-bit is not specified it shall be set to 0. If the value specified is P then the F-bit shall be set equal to the value of the P-bit of the received frame being acknowledged. If more than one frame is sent in the acknowledgment only the first frame shall have an F-bit set to 1. An acknowledgement is an RR, RNR, or pending I-frame(s) (I-frames that have not been transmitted yet). If pending I-frames are available and are allowed to be sent then as many as allowed should be sent as an acknowledgment. Sending an RR or RNR as an acknowledgment for each received I-frame is not required. An implementation may wait to send an RR or RNR until a specific number of I-frames have been received, after a certain period of time has elapsed or some other algorithm. To keep data flowing it is recommended that an acknowledgment be sent before the TxWindow is full. It should also be noted that the maximum size of a remote L2CAP entity's unacknowledged I-frame list may be smaller than the local L2CAP entity's TxWindow. Therefore the local L2CAP entity should not expect the remote L2CAP entity to send

enough frames to fill its TxWindow and should acknowledge I-frames accordingly. The following algorithm shall be used when sending an acknowledgment.

```
if LocalBusy == TRUE then
    Send_RNR(F=x)
else if (RemoteBusy == FALSE) and Pending I-frames
Exist and RemWindow-Not-Full
    Send-Pending-I-frames (F=x)
else
    Send_RR (F=x)
```

InitSrej—Initialize the variables used for processing SREJ as follows:

Clear SrejList—(remove all values)

SendRej := FALSE

BufferSeqSrej := BufferSeq

SaveIframeSrej—Save the received I-frame. Missing I-frame(s) will be retransmitted in response to SREJ frames. Implementations may want to save the I-frame in its proper sequence order by leaving room for the missing I-frames.

StoreOrIgnore—If the local L2CAP entity has room to store the received I-frame then it may store it otherwise it shall discard it. If the received I-frame is stored, ExpectedTxSeq is advanced as follows:

```
ExpectedTxSeq := (ExpectedTxSeq + 1) mod MaxTxWin
```

PbitOutstanding—If the Transmitter state machine of the local L2CAP entity is in the WAIT_F state then return TRUE otherwise return FALSE.

Retransmit-I-frames—All the unacknowledged I-frames starting with the I-frame with TxSeq equal to the ReqSeq field of the received S-frame (REJ or RR) is retransmitted. If the P-bit of the received S-frame is 1 then the F-bit of the first I-frame sent shall be 1. If the P-bit of the received S-frame is 0 then the F-bit of the first I-frame sent shall be 0. The F-bit of all other unacknowledged I-frames sent shall be 0. The retry counter in RetryIframes[] for each retransmitted I-frame is incremented by 1. If a retry counter in RetryIframes[] is equal to MaxTransmit then the channel shall be closed. FramesSent shall be incremented by 1 for each frame sent. If the RetransTimer is not already running then perform the Start-RetransTimer action.

Retransmit-Requested-I-frame—The unacknowledged I-frame with TxSeq equal to the ReqSeq field of the received S-frame (SREJ) is retransmitted. If the P-bit of the received S-frame is 1 then the F-bit of the retransmitted I-frame shall be 1. If the P-bit of the received S-frame is 0 then the F-bit of the retransmitted I-frame shall be 0. The retry counter in RetryIframes[] corresponding to the retransmitted I-frame is incremented by 1. If the RetransTimer is not already running then perform the Start-RetransTimer action.

Send-Pending-I-frames (F=x)—send all pending I-frames that can be sent without exceeding the receiver's TxWindow using the Send-Data action. If a value for the F-bit is specified then the F-bit of the first I-frame sent shall be set to the specified value and the F-bit of all other I-frames sent shall be set to 0. If no value for the F-bit is specified then all I-frames sent shall have the F-bit set to 0. Pending I-frames are I-frames that have been given to the L2CAP entity by the upper layer but have not yet been transmitted. If one or more I-frames are sent and the RetransTimer is not already running then perform the Start-RetransTimer action.

Close Channel—Close the L2CAP channel as described in section 4.6.

Ignore—the event may be silently discarded.

PopSrejList—Remove and discard the TxSeq from the head of SrejList.

Data-IndicationSrej—If the received I-frame fills a gap in a sequence of saved I-frames then all the saved I-frames in the sequence are passed to the SDU reassembly function. For the purpose of the state machine this operation is completed immediately. For example if the TxSeq of saved I-frames before receiving an I-frame is 2, 3, 5, 6, 9 and the received I-frame has a TxSeq of 4 then it fills the gap between 3 and 5 so the sequence 2, 3, 4, 5, 6 can be passed to the SDU reassembly function. When the I-frames are actually removed from the L2CAP entity receive buffers either by being processed immediately or when pulled by the SDU reassembly function, BufferSeqSrej is advanced as follows:

BufferSeqSrej := (BufferSeqSrej + 1) mod MaxTxWin

8.6.5.7 XMIT State Table

Event	Condition	Action	Next State
Data-Request	RemoteBusy = FALSE **and** *RemWindow-Not-Full*	*Send-Data*	XMIT
Data-Request	RemoteBusy = TRUE **or** *RemWindow-Full*	*Pend-Data*	XMIT
Local-Busy-Detected		*LocalBusy := TRUE*	XMIT
		LocalBusy := TRUE *Send RNR*	XMIT
Local-Busy-Clear	*RNRsent = TRUE*	*LocalBusy := TRUE* *RNRsent = FALSE* *Send RR(P=1)* RetryCount := 1 *Stop-RetransTimer* *Start-MonitorTimer*	WAIT_F
Local-Busy-Clear	*RNRsent = FALSE*	*LocalBusy:= FALSE* *RNRsent = FALSE*	XMIT
Recv ReqSeqAndFbit		*Process-ReqSeq*	XMIT
Recv Fbit			XMIT
RetransTimer-Expires		*Send RRorRNR(P=1)* RetryCount := 1 *Start-MonitorTimer*	WAIT_F

Table 8.4: XMIT state table

8.6.5.8 WAIT_F State Table

Event	Condition	Action	Next State
Data-Request		*Pend-Data*	WAIT_F
Recv ReqSeqAndFbit	F = 1	*Process-ReqSeq* *Stop-MonitorTimer* **If** UnackedFrames > 0 **then** *Start-RetransTimer*	XMIT
Recv ReqSeqAndFbit	F = 0	Process-ReqSeq	WAIT_F
Recv Fbit	F = 1	*Stop-MonitorTimer* **If** UnackedFrames > 0 **then** *Start-RetransTimer*	XMIT

Table 8.5: WAIT_F State Table

Event	Condition	Action	Next State
Recv Fbit	F = 0		WAIT_F
MonitorTimer-Expires	RetryCount < Max-Transmit	RetryCount := Retry-Count+1 *Send RRorRNR(P=1)* *Start-MonitorTimer*	WAIT_F
MonitorTimer-Expires	RetryCount ≥ Max-Transmit	*Close Channel*	

Table 8.5: WAIT_F State Table

8.6.5.9 RECV State Table

Event	**Condition**	**Action**	**Next State**
Recv I-frame (F=0)	*With-Expected-TxSeq* **and** *With-Valid-ReqSeq* **and** *With-Valid-F-bit* **and** LocalBusy = FALSE	*Increment-ExpectedTxSeq* *PassToTx* *Data-Indication* *Send-Ack(F=0)*	RECV

Recv I-frame (F=1)	*With-Expected-TxSeq* **and** *With-Valid-ReqSeq* **and** *With-Valid-F-bit* **and** LocalBusy = FALSE	*Increment-ExpectedTxSeq*
		PassToTx
		Data-Indication
		If RejActioned = FALSE **then**
		Retransmit-I-frames
		Send-Pending-I-frames
		else
		RejActioned := FALSE
		Send-Ack(F=0)
			RECV

Recv I-frame	*With-duplicate-TxSeq* **and** *With-Valid-ReqSeq* **and** *With-Valid-F-bit* **and** LocalBusy = FALSE	*PassToTx*	RECV
Recv I-frame	*With-unexpected-TxSeq* **and** *With-Valid-ReqSeq* **and** *With-Valid-F-bit* **and** LocalBusy = FALSE	*PassToTx* *SendREJ*	REJ_SENT
		PassToTx *InitSrej* *SaveIframeSrej* *SendSREJ*	SREJ_SENT
Recv I-frame	*With-Expected-TxSeq* **and** *With-Valid-ReqSeq* **and** *With-Valid-F-bit* **and** LocalBusy = TRUE	*PassToTx* *StoreOrIgnore*	RECV
Recv I-frame	*With-Valid-ReqSeq* **and** *Not-With_Expected_TxSeq* **and** *With-Valid-F-bit* **and** LocalBusy = TRUE	*PassToTx*	RECV
Recv RNR (P=0)	*With-Valid-ReqSeq* **and** *With-Valid-F-bit*	RemoteBusy := TRUE PassToTx Stop-RetransTimer	RECV
Recv RNR (P=1)	*With-Valid-ReqSeq* **and** *With-Valid-F-bit*	RemoteBusy := TRUE PassToTx Stop-RetransTimer Send RRorRNR (F=1)	RECV

Table 8.6: RECV_State table

Event	**Condition**	**Action**	**Next State**
Recv RR(P=0)(F=0)	*With-Valid-ReqSeq* **and** *With-Valid-F-bit*	*PassToTx* **If** RemoteBusy = TRUE **and** UnackedFrames > 0 **then** Start-RetransTimer RemoteBusy := FALSE *Send-Pending-I-Frames*	RECV

Recv RR(F=1)	*With-Valid-ReqSeq* **and** *With-Valid-F-bit*	RemoteBusy := FALSE
		PassToTx
		If RejActioned = FALSE **then**
		Retransmit-I-frames
		Send-Pending-I-frames
		else
		RejActioned := FALSE
			RECV

Recv RR(P=1)	*With-Valid-ReqSeq* **and** *With-Valid-F-bit*	*PassToTx* *Send IorRRorRNR(F=1*) RemoteBusy := FALSE	RECV
Recv REJ (F=0)	*With-Valid-ReqSeq-Retrans* **and** *RetryIframes[i]* < Max-Transmit **and** *With-Valid-F-bit*	RemoteBusy := FALSE PassToTx *Retransmit-I-frames* *Send-Pending-I-frames* If *PbitOutstanding* **then** *RejActioned* := TRUE	RECV

Recv REJ (F=1)	*With-Valid-ReqSeq-Retrans* **and** RetryIframes[i] < Max-Transmit
	and *With-Valid-F-bit*
		RemoteBusy := FALSE
		PassToTx
		If RejActioned = FALSE **then**
		Retransmit-I-frames
		Send-Pending-I-frames
		else
		RejActioned :=FALSE
			RECV

Recv SREJ (P=0) (F=0)	*With-Valid-ReqSeq-Retrans* **and** *RetryIframes[i] < Max-Transmit* **and** *With-Valid-F-bit*	RemoteBusy := FALSE PassToTxFbit Retransmit-Requested-I-frame **If** *PbitOutstanding* **then** SrejActioned := TRUE *SrejSaveReqSeq* = *ReqSeq*	RECV

Table 8.6: RECV_State table

Event	**Condition**	**Action**	**Next State**
Recv SREJ (P=0) (F=1)	*With-Valid-ReqSeq-Retrans* **and** RetryIframes[i] < Max-Transmit **and** *With-Valid-F-bit*	RemoteBusy := FALSE PassToTxFbit **If** SrejActioned := TRUE **and** SrejSaveReqSeq = ReqSeq **then** SrejActioned := FALSE **else** *Retransmit-Requested-I-frame*	RECV
Recv SREJ(P=1)	*With-Valid-ReqSeq-Retrans* **and** RetryIframes[i] < Max-Transmit **and** *With-Valid-F-bit*	RemoteBusy := FALSE *PassToTx* *Retransmit-Requested-I-frame* *Send-Pending-I-frames* **If** *PbitOutstanding* **then** SrejActioned = TRUE *SrejSaveReqSeq := ReqSeq*	RECV
Recv REJ	*With-Valid-ReqSeq-Retrans* **and** RetryIframes[i] ≥ Max-Transmit	*Close Channel*	
RECV SREJ	*With-Valid-ReqSeq-Retrans* **and** RetryIframes[i] >= Max-Transmit	*Close Channel*	
Recv I-frame	*(With-Invalid-TxSeq* **and** *TxWindow >(MaxTxWin/2)* **or** *With-Invalid-ReqSeq*	*Close Channel*	
Recv I-frame	*With-Invalid-TxSeq*	*Close Channel*	
	and *TxWindow ≤ (MaxTx-Win/2)*	Ignore	RECV
Recv RRorRNR	*With-Invalid-ReqSeq*	*Close Channel*	
Recv REJorSREJ	*With-Invalid-ReqSeq-Retrans*	*Close Channel*	
Recv frame		*Ignore*	RECV

Table 8.6: RECV_State table

8.6.5.10 REJ_SENT State Table

Event	**Condition**	**Action**	**Next State**
Recv I-frame (F=0)	*With-Expected-TxSeq* **and** *With-Valid-ReqSeq* **and** *With-Valid-F-bit*	*Increment-ExpectedTxSeq* *PassToTx* *Data-Indication* *Send-Ack(F=0)*	RECV

Recv I-frame (F=1)	*With-Expected-TxSeq*
	and *With-Valid-ReqSeq*
	and *With-Valid-F-bit*
		Increment-ExpectedTxSeq
		PassToTx
		Data-Indication
		If RejActioned = FALSE **then**
		Retransmit I-frames
		Send-Pending-I-frames
		else
		RejActioned := FALSE
		Send-Ack (F=0)
			RECV

Recv I-frame	*With-Unexpected-TxSeq* **and** *With-Valid-ReqSeq* **and** *With-Valid-F-bit*	*PassToTx*	REJ_SENT

Recv RR (F=1)	*With-Valid-ReqSeq*
	and *With-Valid-F-bit*
		RemoteBusy := FALSE
		PassToTx
		If RejActioned = FALSE **then**
		Retransmit-I-frames
		Send-Pending-I-frames
		else
		RejActioned := FALSE
			REJ_SENT

Recv RR(P=0)(F=0)	*With-Valid-ReqSeq* **and** *With-Valid-F-bit*	*PassToTx* **If** RemoteBusy = TRUE **and** UnackedFrames > 0 **then** Start-RetransTimer RemoteBusy := FALSE *Send-Ack(F=0)*	REJ_SENT
Recv RR(P=1)	*With-Valid-ReqSeq* **and** *With-Valid-F-bit*	*PassToTx* **If** RemoteBusy = TRUE **and** UnackedFrames > 0 **then** Start-RetransTimer RemoteBusy := FALSE Send RR(F=1)	REJ_SENT
Recv RNR(P=1)	*With-Valid-ReqSeq* **and** *With-Valid-F-bit*	RemoteBusy := TRUE *PassToTx* *Send RR(F=1)*	REJ_SENT

Table 8.7: REJ_SENT State table

Event	**Condition**	**Action**	**Next State**
Recv RNR(P=0)	*With-Valid-ReqSeq and With-Valid-F-bit*	RemoteBusy := TRUE *PassToTx* *Send RR(F=0)*	REJ_SENT
Recv REJ (F=0)	*With-Valid-ReqSeq - Retrans* **and** RetryIframes[i] < MaxTransmit **and** *With-Valid-F-bit*	RemoteBusy := FALSE *PassToTx* *Retransmit-I-frames* *Send-Pending-I-frames* **If** *PbitOutstanding* **then** RejActioned := TRUE	REJ_SENT

Recv REJ (F=1)	*With-Valid-ReqSeq - Retrans* **and** RetryIframes[i] < MaxTransmit **and** *With-Valid-F-bit*	RemoteBusy := FALSE
		PassToTx
		If RejActioned = FALSE **then**
		Retransmit-I-frames
		Send-Pending-I-frames
		else
		RejActioned := FALSE
			REJ_SENT

Recv SREJ (P=0) (F=0)	*With-Valid-ReqSeq-Retrans* **and** RetryIframes[i] < MaxTransmit **and** *With-Valid-F-bit*	RemoteBusy := FALSE *PassToTxFbit* *Retransmit-Requested-I-frame* **If** *PbitOutstanding* **then** SrejActioned := TRUE *SrejSaveReqSeq := ReqSeq*	REJ_SENT

Recv SREJ (P=0) (F=1)	*With-Valid-ReqSeq-Retrans* **and** RetryIframes[i] < MaxTransmit **and** *With-Valid-F-bit*	RemoteBusy := FALSE
		PassToTxFbit
		If SrejActioned = TRUE **and** SrejSaveReqSeq = ReqSeq **then**
		SrejActioned := FALSE
		else
		Retransmit-Requested-I-frame
			REJ_SENT

Recv SREJ (P=1)	*With-Valid-ReqSeq-Retrans* **and** RetryIframes[i] < MaxTransmit **and** *With-Valid-F-bit*	RemoteBusy := FALSE *PassToTx* *Retransmit-Requested-I-frames* *Send-Pending-I-frames* **If** *PbitOutstanding* **then** SrejActioned := TRUE *SrejSaveReqSeq := ReqSeq*	REJ_SENT

Table 8.7: REJ_SENT State table

Event	**Condition**	**Action**	**Next State**
Recv REJ	*With-Valid-ReqSeq-Retrans* **and** RetryIframes[i] ≥ MaxTransmit	*Close Channel*	
Recv SREJ (P=0)	*With-Valid-ReqSeq-Retrans* **and** RetryIframes[i] ≥ MaxTransmit	*Close Channel*	
RECV SREJ(P=1)	*With-Valid-ReqSeq-Retrans* **and** RetryIframes[i] ≥ MaxTransmit	*Close Channel*	
Recv I-frame	*(With-Invalid-TxSeq* **and** *TxWindow > (MaxTxWin/2)* **or** *With-Invalid-ReqSeq*	*Close Channel*	
Recv RRorRNR	*With-Invalid-ReqSeq*	*Close Channel*	
RecvREJorSREJ	*With-Invalid-ReqSeq-Retrans*	*Close Channel*	
Recv I-frame	*With-Invalid-TxSeq*	*Close Channel*	
	and *TxWindow ≤ (MaxTxWin/2)*	*Ignore*	REJ_SENT
Recv frame		*Ignore*	REJ_SENT

Table 8.7: REJ_SENT State table

8.6.5.11 SREJ_SENT State Table

Event	Condition	Action	Next State
Recv I-frame	*With-Expected-TxSeq -Srej* **and** *With-Valid-ReqSeq* **and** *With-Valid-F-bit* **and** SendRej = FALSE **and** SrejList = 1	*SaveIframeSrej* *PopSrejList* *PassToTx* *Data-IndicatioSrej* BufferSeq := BufferSeqS-rej *Send-Ack (F=0)*	RECV
Recv I-frame	*With-Expected-TxSeq-Srej* **and** *With-Valid-ReqSeq* **and** *With-Valid-F-bit* **and** SendRej = TRUE **and** SrejList = 1	*SaveIframeSrej* *PopSrejList* *PassToTx* *Data-IndicationSrej* BufferSeq := BufferSeqS-rej *Send REJ*	REJ_SENT
Recv I-frame	*With-Expected-TxSeq-Srej* **and** *With-Valid-ReqSeq* **and** *With-Valid-F-bit* **and** SrejList > 1	*SaveIframeSrej* *PopSrejList* *PassToTx* *Data-IndicationSrej*	SREJ_SENT
Recv I-frame	*With-Expected-TxSeq* **and** With-Valid-ReqSeq **and** *With-Valid-F-bit*	*SaveIframe* *Increment-ExpectedTxSeq* *PassToTx*	SREJ_SENT
Recv I-frame	*With-Unexpected-TxSeq* **and** *With-Valid-ReqSeq* **and** *With-Valid-F-bit* **and** SendRej = FALSE	*SaveIframeSrej* *PassToTx* Send SREJ	SREJ_SENT
		PassToTx SendRej := TRUE	SREJ_SENT
Recv I-frame	*With-Unexpected-TxSeq* **and** *With-Valid-ReqSeq* **and** *With-Valid-F-bit* **and** SendRej = TRUE	*PassToTx*	SREJ_SENT
Recv I-frame	*With-Unexpected-TxSeq-Srej* **and** *With-Valid-ReqSeq* **and** *With-Valid-F-bit*	*SaveIframeSrej* *PassToTx* *Send SREJ(SrejList)*	SREJ_SENT

Table 8.8: SREJ_SENT State Table

Event	Condition	Action	Next State
Recv I-frame	*With-duplicate-TxSeq-Srej* **and** *With-Valid-ReqSeq* **and** *With-Valid-F-bit*	*PassToTx*	SREJ_SENT

Recv RR(F=1)	*With-Valid-ReqSeq*
	and *With-Valid-F-bit*
		RemoteBusy := FALSE
		PassToTx
		If RejActioned = FALSE **then**
		Retransmit-I-frames
		Send-Pending-I-frames
		else
		RejActioned := FALSE
			SREJ_SENT

Recv RR(P=1)	*With-Valid-ReqSeq* **and** *With-Valid-F-bit*	*PassToTx* **If** RemoteBusy = TRUE **and** UnackedFrames > 0 **then** Start-RetransTimer RemoteBusy := FALSE Send SREJ(SrejList-tail)(F=1)	SREJ_SENT
Recv RR(P=0)(F=0)	*With-Valid-ReqSeq* **and** *With-Valid-F-bit*	*PassToTx* **If** RemoteBusy = TRUE **and** UnackedFrames > 0 **then** Start-RetransTimer RemoteBusy := FALSE Send-Ack(F=0)	SREJ_SENT
Recv RNR(P=1)	*With-Valid-ReqSeq* **and** *With-Valid-F-bit*	RemoteBusy := TRUE *PassToTx* Send SREJ(SrejList-tail)(F=1)	SREJ_SENT
Recv RNR(P=0)	*With-Valid-ReqSeq* ***and*** *With-Valid-F-bit*	RemoteBusy := TRUE *PassToTx* *Send RR(F=0)*	SREJ_SENT

Table 8.8: SREJ_SENT State Table

Event	Condition	Action	Next State
Recv REJ (F=0)	*With-Valid-ReqSeq-Retrans* **and** RetryIframes[i] < MaxTransmit **and** *With-Valid-F-bit*	RemoteBusy := FALSE *PassToTx* *Retransmit-I-frames* *Send-Pending-I-frames* **If** *PbitOutstanding* **then** RejActioned := TRUE	SREJ_SENT

Recv REJ (F=1)	*With-Valid-ReqSeq-Retrans* **and** RetryIframes[i] < MaxTransmit **and** *With-Valid-F-bit*	RemoteBusy := FALSE
		PassToTx
		If RejActioned = FALSE **then**
		Retransmit-I-frames
		Send-Pending-I-frames
		else
		RejActioned := FALSE
			SREJ_SENT

Recv SREJ(P=0) (F=0)	*With-Valid-ReqSeq-Retrans* **and** RetryIframes[i] < MaxTransmit **and** *With-Valid-F-bit*	RemoteBusy := FALSE *PassToTxFbit* *Retransmit-Requested-I-frame* **If** *PbitOutstanding* **then** SrejActioned := TRUE *SrejSaveReqSeq* = *ReqSeq*	SREJ_SENT

Recv SREJ(P=0) (F=1)	*With-Valid-ReqSeq-Retrans* **and** RetryIframes[i] < MaxTransmit **and** *With-Valid-F-bit*	RemoteBusy := FALSE
		PassToTxFbit
		If SrejActioned = TRUE **and** SrejSaveReqSeq = ReqSeq **then**
		SrejActioned := FALSE
		else
		Retransmit-Requested-I-frame
			SREJ_SENT

Recv SREJ(P=1)	*With-Valid-ReqSeq-Retrans* **and** RetryIframes[i] < MaxTransmit **and** *With-Valid-F-bit*	RemoteBusy := FALSE *PassToTx* *Retransmit-Requested-I-frame* *Send-Pending-I-frames* **If** *PbitOutstanding* **then** SrejActioned := TRUE *SrejSaveReqSeq* = *ReqSeq*	SREJ_SENT

Table 8.8: SREJ_SENT State Table

Event	Condition	Action	Next State
Recv REJ	*With-Valid-ReqSeq-Retrans* **and** RetryIframes[i] ≥ MaxTransmit	*Close Channel*	
Recv SREJ(P=0)	*With-Valid-ReqSeqRe-trans* **and** RetryIframes[i] ≥ Max-Transmit	*Close Channel*	
Recv SREJ(P=1)	*With-Valid-ReqSeqRe-trans* **and** RetryIframes[i] ≥ Max-Transmit	*Close Channel*	
Recv I-frame	(*With-Invalid-TxSeq* **and** *TxWindow > (MaxTx-Win/2)* *or With-Invalid-ReqSeq*	*Close Channel*	
Recv RROrRNR	*With-Invalid-ReqSeq*	*Close Channel*	
Recv REJorSREJ	*With-Invalid-ReqSeq-Retrans*	*Close Channel*	
Recv I-frame	*With-Invalid-TxSeq* **and** *TxWindow ≤ (Max-TxWin/2)*	*Close Channel*	
		Ignore	SREJ_SENT
Recv frame	-	Ignore	SREJ_SENT

Table 8.8: SREJ_SENT State Table

8.7 STREAMING MODE

When a link is configured to work in Streaming Mode, the frame format for outgoing data is the same as for Enhanced Retransmission mode but frames are not acknowledged. Therefore

- RR, REJ, RNR and SREJ frames shall not be used in Streaming Mode.
- The F-bit shall always be set to zero in the transmitter, and shall be ignored in the receiver.
- the MonitorTimer and RetransmissionTimer shall not be used in Streaming mode.

A channel configured to work in Streaming mode shall be configured with a finite value for the Flush Timeout on the transmitter.

8.7.1 Transmitting I-frames

When transmitting a new I-frame the control field parameter ReqSeq shall be set to 0, TxSeq shall be set to NextTXSeq and NextTXSeq shall be incremented by one.

8.7.2 Receiving I-frames

Upon receipt of a valid I-frame with TxSeq equal to ExpectedTxSeq, the frame shall be made available to the reassembly function. ExpectedTxSeq shall be incremented by one.

Upon receipt of a valid I-frame with an out-of-sequence TxSeq (see Section 8.7.3.1 on page 176) all frames with a sequence number less than TxSeq shall be assumed lost and marked as missing. The missing I-frames are in the range from ExpectedTxSeq (the frame that the device was expecting to receive) up to and including TxSeq-1. ExpectedTxSeq shall be set to TxSeq +1. The received I-frame shall be made available for pulling by the reassembly function. The ReqSeq shall be ignored.

Note: It is possible for a complete window size of I-frames to be missing and thus, no missing I-frames are detected. For example, when a window size of 63 is used this situation occurs when 63 I-frames in a row are missing. If the ability to not detect missing I-frames will cause problems for an application, it is recommended that the Extended Window Size option be used.

If there is no buffer space for the received I-frame an existing I-frame (i.e. the oldest) shall be discarded (flushed) freeing up buffer space for the new I-frame. The discarded I-frame shall be marked as missing.

8.7.3 Exception Conditions

Exception conditions may occur as the result of physical layer errors or L2CAP procedural errors. The error recovery procedures which are available following the detection of an exception condition at the L2CAP layer in Streaming mode are defined in this section.

8.7.3.1 TxSeq Sequence error

A TxSeq sequence error exception condition occurs in the receiver when a valid I-frame is received which contains a TxSeq value which is not equal to the expected value, thus TxSeq is not equal to ExpectedTxSeq.

The out-of-sequence I-frame is identified by a TxSeq that is greater than ExpectedTxSeq (TxSeq > ExptectedTxSeq). The ReqSeq shall be ignored. The missing I-frame(s) are considered lost and ExpectedTXSeq is set equal to TxSeq+1 as specified in Section 8.7.2 on page 176. The missing I-frame(s) are reported as lost to the SDU reassembly function.

9 PROCEDURE FOR AMP CHANNEL CREATION AND HANDLING

When an AMP is used, the procedures defined in this chapter shall be used. Enhanced Retransmission mode is used on all reliable channels to ensure a reliable move channel operation and to ensure that user traffic with an infinite flush timeout is reliable even for AMPs that do not support infinite flush timeout. Streaming mode is used on all channels configured with a finite flush timeout.

9.1 CREATE CHANNEL

Create Channel Request is used to create a new L2CAP channel over a Controller. The channel will have the quality of service specified by a pair of Extended Flow Specifications exchanged during channel configuration. After configuration each device will have an outgoing (transmit traffic) flow specification and an incoming (received traffic) flow specification.

All Best Effort channels created over the same AMP Physical link are aggregated over a single AMP Logical link, so if a Best Effort channel is requested over an AMP Physical link where a Best Effort logical link already exists then the Best Effort Extended Flow Specifications are aggregated into one pair of flow specifications and the flow specification of the AMP Logical link is modified using the HCI Flow Spec Modify command (in devices that support HCI). Section 7.8 describes how Best Effort Flow specifications are aggregated. A logical link is created for each Guaranteed channel and one for the first Best Effort channel of the AMP.

All channels created over the same BR/EDR physical link are aggregated over a single logical link. Aggregation of Best Effort Extended Flow Specifications is not necessary for channels created over BR/EDR Controllers so the term "modify the logical link" in the algorithm descriptions results in "no action" when the Controller is BR/EDR. The L2CAP layer should perform admission control for Guaranteed channels created on BR/EDR Controllers (see Section 7.10 for a description of L2CAP admission control). The term "create a logical link" in the algorithm description refers to L2CAP performing admission control when the Controller is BR/EDR.

Basic Algorithm:

1. Extended Flow specifications and other configuration parameters shall be exchanged via the Lockstep Configuration procedure.
2. If the service type of the Extended Flow Specifications are Best Effort (including the case where one is Best Effort and the other is "No Traffic") then the Best Effort Algorithm shall be used otherwise the Guaranteed Algorithm shall be used. (See Section 5.6 for rules on setting the service type of Extended Flow Specifications).

Best Effort Algorithm:

1. If one or more Best Effort channels already exist for the Controller then goto step 3
2. Tell the Controller to create a logical link passing the Extended Flow Specifications. Goto step 5
3. Aggregate the Extended Flow Specifications with all the other Best Effort Extended Flow specifications running on the same physical link as described in Section 7.8.
4. Tell the controller to modify the logical link passing the aggregated Extended Flow Specifications.
5. If the Controller accepts the create/modify request and returns success then complete the L2CAP Configuration with result = success otherwise complete the L2CAP configuration with result = "Failure - flow spec rejected"

Guaranteed Algorithm

1. Tell the Controller to create a logical link passing the Extended Flow Specifications.
2. If the Controller accepts the create request and returns success, complete the L2CAP Configuration with result = success; otherwise, complete the L2CAP configuration with result = "Failure - flow spec rejected".

If the Controller is a BR/EDR Controller and the Extended Flow Specification type is guaranteed then L2CAP should perform admission control by determining if the requested QoS can be achieved by the BR/EDR without compromising existing guaranteed channels running on the BR/EDR Controller.

An example of the creation of the first Best Effort channel or a guaranteed channel is shown in Figure 9.1. An example of creation of a subsequent Best Effort channel is shown in Figure 9.2.

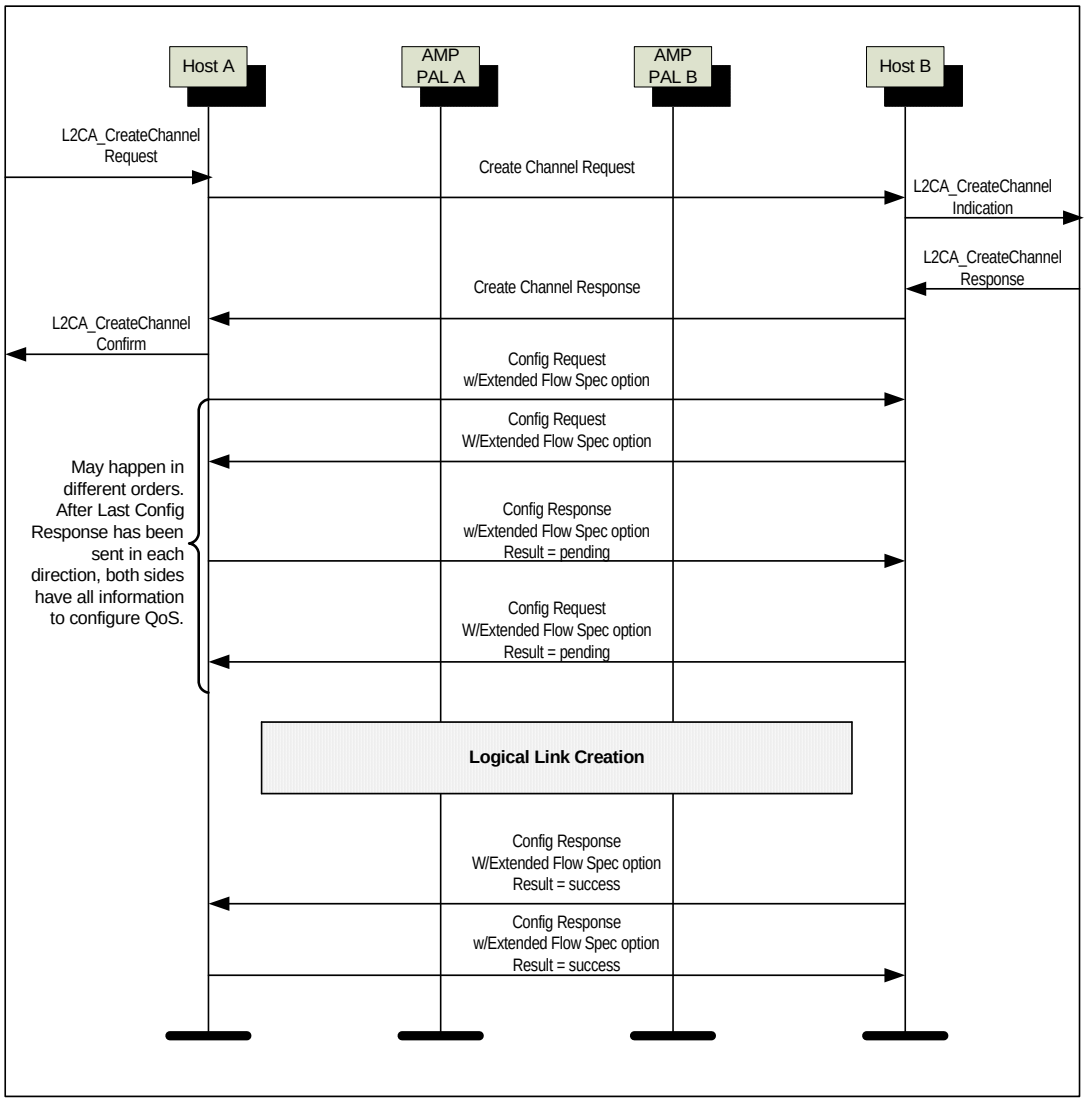

Figure 9.1: Creation of First Best Effort L2CAP channel or a Guaranteed L2CAP Channel

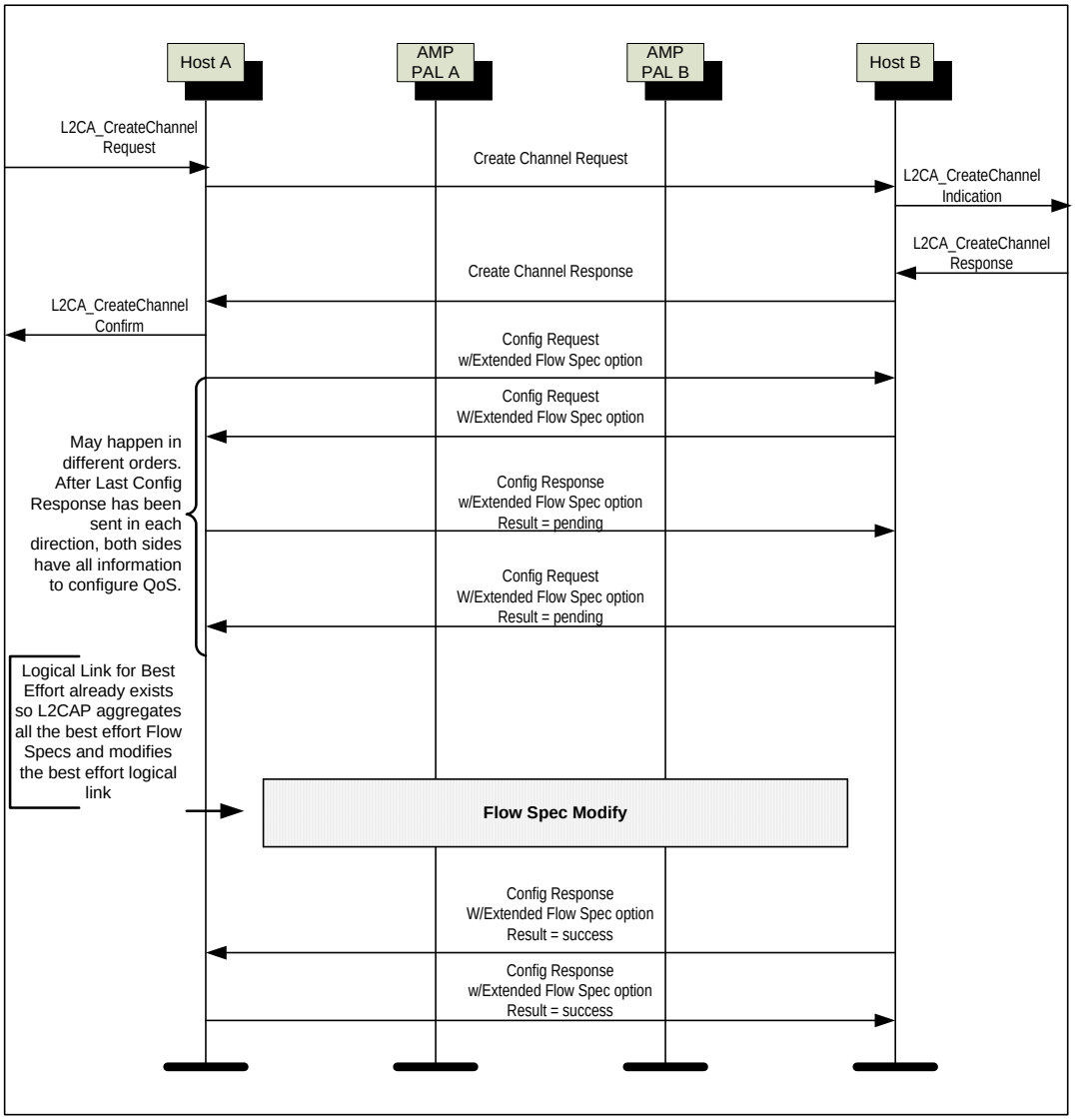

Figure 9.2: Creation of Subsequent Best Effort L2CAP Channel

9.2 MOVE CHANNEL

Move Channel is used to move an L2CAP channel from one Controller (AMP or BR/EDR) to another. Moving a channel retains the existing channel configuration (MTU, QOS, etc.) and the CID. If reconfiguration is necessary then it may be done after a successful move channel operation. If a channel configured as Best Effort is moved, the Extended Flow Specification aggregate shall be recalculated (see Section 7.8 for the aggregation algorithm) for both the old and new Controllers in cases where an aggregate already exists or where a channel is moved to a Controller with an existing Best Effort channel. If the Extended Flow Specification aggregate are modified for a Controller then a logical link modify operation shall be performed for that Controller.

The two procedures for moving channels are based on the mode configured for the channel. One procedure is used for channels configured with Enhanced

Retransmission mode. Another procedure is used for channels configured with Streaming mode. The procedures are described in the following sections.

Note that the terms such as "logical link create" and "logical link modify" are used in the Move procedures. For AMP Controllers these terms refer to logical link operations (e.g. QoS admission control) performed by the Controller. For BR/EDR Controllers these terms refer to QoS admission control performed by L2CAP on behalf of the BR/EDR Controller.

9.2.1 Move Channel Protocol Procedure with Enhanced Retransmission Mode

1. When the L2CAP layer on the initiating device receives the L2CA_Move_Channel.request from the upper layer (application) it shall stop sending I-frames and S-frames. It shall continue to listen on the old Controller and follow the procedures in Section 9.2.1.1. The L2CAP layer on the initiating device shall send the Move Channel Request packet over the L2CAP signaling channel to the remote (responding) device.
2. When the L2CAP layer on the responding device receives the Move Channel Request packet it shall stop sending I-Frames and S-frames. It shall still listen on the old Controller and follow the procedures in Section 9.2.1.1. It shall send a Move Channel Response packet to the other side. If a logical link must be created or modified (or admission control is required) the Move Channel Response packet shall contain a result code of "pending". If a logical link does not need to be created or modified and the move operation is allowed then the Move Channel Response packet shall contain a result code of "success". Otherwise, it shall contain the appropriate "refused" result code. If the response code sent in the Move Channel Response packet is "pending" then the L2CAP layer on the responding device shall attempt to create or modify a logical link on the new Controller for the channel. When the logical link create/ modify operation is complete, the L2CAP layer on the responding device shall send a Move Channel Response packet to the other side with the result code indicating the success/failure of the logical link create/modify.
3. When the L2CAP layer on the initiating device receives the Move Channel Response packet it shall check the result code. If the result code in the Move Channel Response packet is "refused" it shall send a Move Channel Confirmation packet with result code "failure" to the other side. If the result code in the Move Channel Response packet is "pending" or "success" the L2CAP layer shall stop listening on the old Controller and attempt to create/modify a logical link on the new Controller for the channel. If the result code in the Move Channel Response packet is "pending" then it shall use the ERTX timer while waiting for a Move Channel Response packet with a "non-pending" result code from the responding device. When the logical link create/

modify operation is complete and the L2CAP layer on the initiating device has received a Move Channel Response packet from the responding device with a "non-pending" result code, it shall send a Move Channel Confirmation packet to conclude the Move Channel procedure. The result code in the Move Channel Confirmation packet indicates the success/failure of its own logical channel create/modify operation and the result code in the Move Channel Response packet from the responding device. If both are success then the result code sent in the Move Channel Confirmation packet shall be "success" otherwise it shall be "failure."

4. When the L2CAP layer on the responding device receives the Move Channel Confirmation packet it shall send a Move Channel Confirmation Response and send an L2CA_Move_Channel_Confirm.indication to the upper layer with the result code contained in the Move Channel Confirmation packet. If the result code of the Move Channel Confirmation is success the L2CAP layer on the responding device shall listen on the new Controller if the result code is failure then it shall listen on the old Controller.
5. When the L2CAP layer on the initiating device receives the Move Channel Confirmation response packet it shall send an L2CAP_Move_Channel.confirm to the upper layer with the result code passed in the Move Channel Confirmation packet. If the result code sent in the Move Channel Confirmation packet is success then the L2CAP layer on the initiating device shall send an RR(P=1) on the new Controller and shall start listening on the new Controller. Before sending the RR(P=1) the L2CAP layer on the initiating device may initiate reconfiguration by sending a Configuration Request packet. If the result sent is failure then the L2CAP layer on the initiating device shall send an RR(P=1) on the old Controller and start listening on the old Controller.
6. When the L2CAP layer on the responding device receives the RR(P=1) packet it shall send an I-Frame(F=1) with a TxSeq matching the ReqSeq in the RR(P=1) or an RR(F=1) if there are no I-frames to send. If the I-frame is a retransmission and the PDU size used for the new Controller is smaller than the PDU size used for the old Controller, the responding device shall segment the retransmitted I-frame to make it fit in the new PDU size. If the L2CAP layer on the responding device receives a Configuration Request packet before the RR(P=1) it shall perform reconfiguration. When the reconfiguration is complete it shall wait for the RR(P=1). If the L2CAP layer on the responding device desires to perform reconfiguration but receives the RR(P=1) it may send a Configuration Request packet instead of the RR(F=1) or I-frame(F=1) to initiate reconfiguration. After the reconfiguration is complete it shall send the RR(F=1) or I-frame(F=1).

7. When the L2CAP layer on the initiating device receives the I-Frame(F=1) or RR(F=1) from the responding device, the move is complete. If it receives a Configuration Request packet before receiving the RR(F=1) or I-frame(F=1) it shall perform reconfiguration. When reconfiguration is complete it shall wait for the RR(F=1) or I-frame(F=1).

9.2.1.1 Enhanced Retransmission Mode Procedures During A Move Operation

1. Stop sending I-frames and S-frames and cancel all timers. Set the transmitter to the XMIT state and clear all retry counters.
2. Clear or reset any SREJ_SENT and REJ_SENT state specific variables including flushing any received out-of-sequence I-frames saved as part of being in the SREJ_SENT state. Set the receiver to the RECV state.
3. Process received I-frames in the RECV state including processing the ReqSeq and passing completed SDUs to the upper layer. Only process the ReqSeq of received S-frames. Do not change state.
4. Ignore all out-of-sequence I-frames keeping note of the TxSeq of the last in-sequence I-frame received.
5. If the initiating device is in a local busy condition then it should wait to send the Move Channel Confirmation packet until the local busy condition has cleared. If the responding device is in a local busy condition then it should send a Move Channel Response packet with result "pending" upon receiving the Move Channel Request packet and wait until the local busy condition is cleared before sending a Move Channel Response packet with a "non-pending" result.
6. The ReqSeq of the RR(P=1) sent by the initiating device shall be set to the TxSeq of the next I-frame after the last in-sequence I-framed received (noted in step 4). The ReqSeq of the RR(F=1) or I-frame(F=1) sent by the responding device shall be set to the TxSeq of the next frame after the last in-sequence I-framed received (noted in step 4).
7. The new Controller or HCI transport may require smaller PDU size than the old Controller. If this is the case then the L2CAP layer shall segment all retransmitted I-frames to fit the new PDU size.
8. After sending the RR(P=1) the initiating device should start the Monitor Timer and go to the WAIT_F state.
9. Timers shall be stopped during channel reconfiguration and restarted when reconfiguration is complete.

9.2.2 Move Channel Protocol Procedure with Streaming Mode (Initiator is Data Source)

1. When the L2CAP layer on the initiating device (data source) receives the L2CA_Move_Channel.request it shall stop sending L2CAP PDUs. The L2CAP layer on the initiating device shall send a Move Channel Request packet over the L2CAP signaling channel to the remote (responding) device.
2. When the L2CAP layer on the responding device receives the Move Channel Request packet it shall still listen on the old Controller for receive frames (timing could be such that packets from the initiating device are still in transit). It shall pass completely received SDUs up to the upper layer. It shall send a Move Channel Response packet to the other side. If a logical link must be created (or admission control is required) the Move Channel Response packet shall contain a result code of "pending". If a logical link does not need to be created and the move operation is allowed then the Move Channel Response packet shall contain a result code of "success". Otherwise it shall contain the appropriate "refused" result code. If the response code sent in the Move Channel Response packet is "pending" then the L2CAP layer on the responding device shall attempt to create a logical link on the new Controller for the channel. When the logical link create operation is complete, the L2CAP layer on the responding device shall send a Move Channel Response packet to the other side with the result code indicating the success/failure of the logical link create operation. It shall continue to listen on the old Controller.
3. When the L2CAP layer on the initiating device receives the Move Channel Response packet it shall check the result code. If the result code in the Move Channel Response packet is "refused" it shall send a Move Channel Confirmation packet with result code "failure" to the other side. If the result code in the Move Channel Response packet is "pending" or "success" the L2CAP layer shall attempt to create a logical link on the new Controller for the channel. If the result code in the Move Channel Response packet is "pending" then it shall use the ERTX timer while waiting for a Move Channel Response packet with a "non-pending" result code from the responding device. When the logical link create operation is complete and it has received a Move Channel Response packet from the responding device with a "non-pending" result code it shall send a Move Channel Confirmation packet and wait for a Move Channel Confirmation response packet. The result code in the Move Channel Confirmation indicates the success/failure of its own logical link create operation and the result code in the Move Channel Response packet from the responding device. If both are success then the result code sent in the Move Channel Confirmation shall be success otherwise it shall be failure.

4. When the L2CAP layer on the responding device receives the Move Channel Confirmation packet it shall send a Move Channel Confirmation response packet and send an L2CA_Move_Channel_Confirm.indication to the upper layer with the result code passed in the Move Channel Confirmation packet. If the result code of the Move Channel Confirmation is success it shall listen on the new Controller. If the result code is failure it shall listen on the old Controller.
5. When the L2CAP layer on the initiating device receives the Move Channel Confirmation response packet it shall send an L2CAP_Move_Channel.confirm to the upper layer with the result code passed in the Move Channel Confirmation packet. If the result sent in the Move Channel Confirmation is success then the initiating device shall send I-frames for the channel on the new Controller otherwise it shall send I-frames for the channel on the old Controller.

9.2.3 Move Channel Protocol Procedure with Streaming Mode (Initiator is Data Sink)

1. When the L2CAP layer on initiating device (data sink) receives the L2CAP_Move_Channel.request it shall send a Move Channel Request packet over the L2CAP signaling channel to the remote (responding) device. It shall continue listening on the old Controller.
2. When the L2CAP layer on the responding device receives the Move Channel Request packet it shall stop sending L2CAP PDUs and send a Move Channel Response packet to the other side. If a logical link must be created (or admission control is required) the Move Channel Response packet shall contain a result code of "pending". If a logical link does not need to be created and the move operation is allowed then the Move Channel Response packet shall contain a result code of "success". Otherwise it shall contain the appropriate "refused" result code. If the result code sent in the Move Channel Response packet is "pending" then the L2CAP layer on the responding device shall attempt to create a logical link on the new Controller for the channel. When the logical link create operation is complete, the L2CAP layer on the responding device shall send a Move Channel Response packet to the other side with the result code indicating the success/failure of the logical link create.
3. When the L2CAP layer on the initiating device receives the Move Channel Response packet it shall check the result code. If the result code in the Move Channel Response packet is "refused" it shall send a Move Channel Confirmation packet with result code "failure" to the other side. If the result code in the Move Channel Response packet is "pending" or "success" the L2CAP layer shall attempt to create a logical link on the new Controller for the channel. If the result code in the Move Channel Response packet is "pending" then it shall use the ERTX timer while waiting for a Move Channel Response packet with

a "non-pending" result code from the responding device. When the logical link create operation is complete and it has received a Move Channel Response packet from the responding device with a "non-pending" result code it shall send a Move Channel Confirmation packet and wait for a Move Channel Confirmation response packet. The result code in the Move Channel Confirmation indicates the success/failure of its own logical link create operation and the result code in the Move Channel Response packet from the responding device. If both are success then the result code sent in the Move Channel Confirmation shall be success otherwise it shall be failure. If the result sent is success then the initiating device shall listen on the new Controller otherwise it shall listen on the old Controller.

4. When the L2CAP layer on the responding device receives the Move Channel Confirmation packet it shall send a Move Channel Confirmation response packet and send an L2CA_Move_Channel_Confirm.indication to the upper layer. If the result code in the Move Channel Confirmation packet is success it shall send I-frames for the channel on the new Controller. If the result code is failure it shall send I-frames on for the channel the old Controller.
5. When the L2CAP layer on the initiating device receives the Move Channel Confirmation response packet it shall send an L2CA_Move_Channel.confirm to the upper layer with the result code passed in the Move Channel Confirmation packet.

Figure 9.3 and Figure 9.4 show examples of the move operation with Enhanced Retransmission mode active.

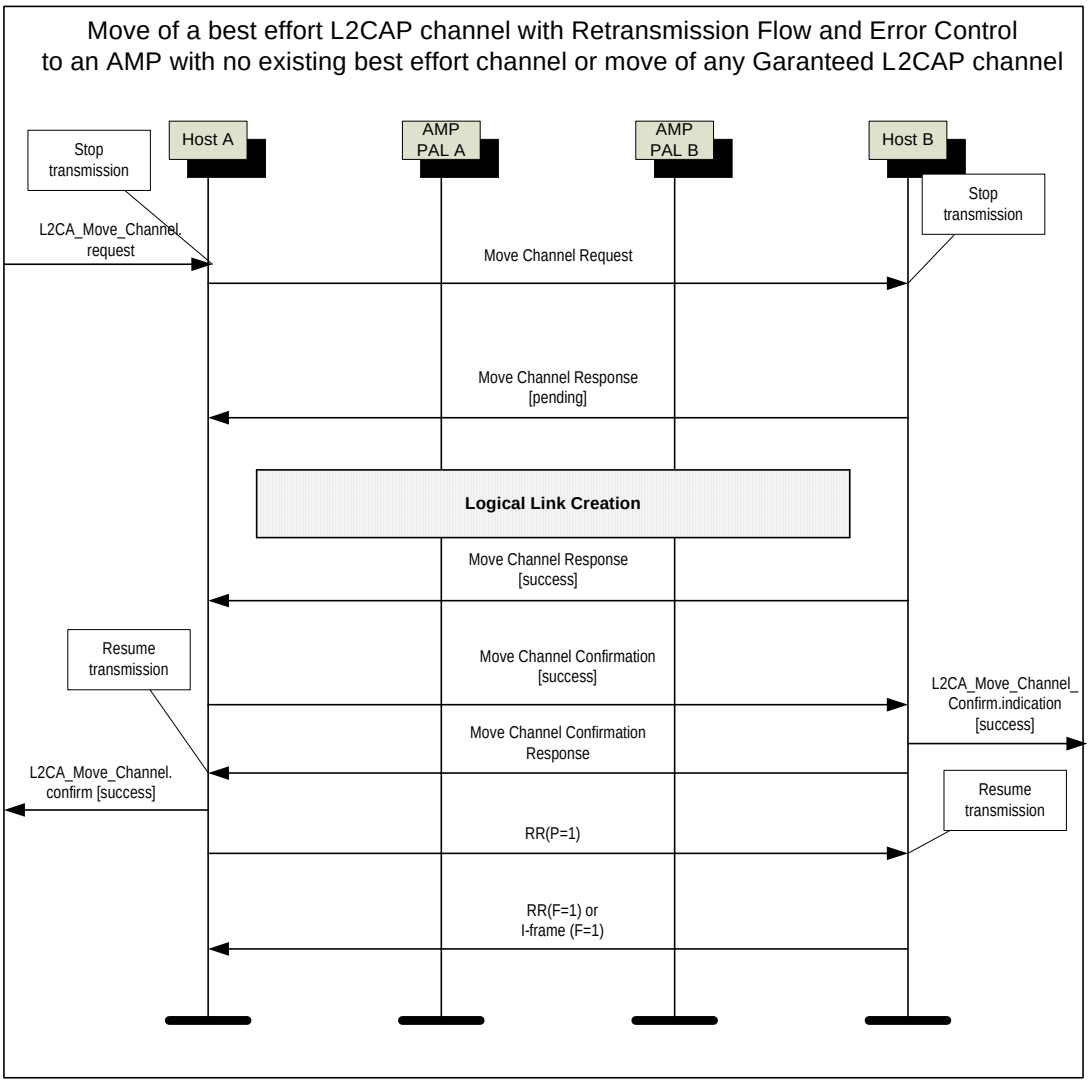

Figure 9.3: Move of a Best Effort L2CAP channel Enhanced Retransmission mode enabled to an AMP with no existing best effort logical link or move of any Guaranteed L2CAP channel

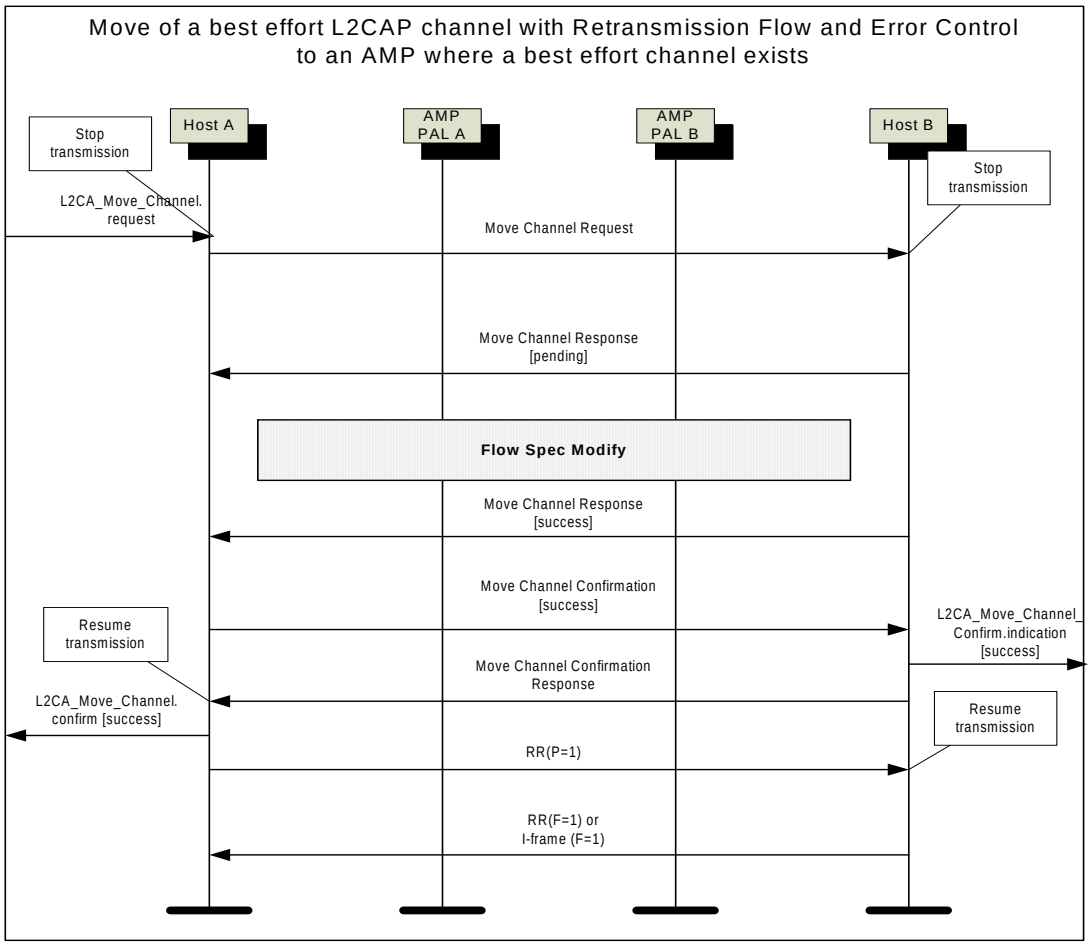

Figure 9.4: Move of a Best Effort L2CAP channel with Enhanced Retransmission mode enabled to an AMP where a best effort logical link exists

9.3 DISCONNECT CHANNEL

If a channel configured as Best Effort is disconnected the Extended Flow Specification aggregate shall be recalculated (see Section 7.8 for the aggregation algorithm) unless it is the last or only channel. If this is not the last or only Best Effort channel for the logical link then a logical link modify operation shall be performed otherwise the logical link should be disconnected. Since there is only one logical link per physical link on a BR/EDR controller the ACL link should not be disconnected until all channels for the logical link are disconnected.

10 LIST OF FIGURES

Figure 1.1: L2CAP architectural blocks 27
Figure 2.1: Channels between devices 36
Figure 2.2: L2CAP transaction model 37
Figure 3.1: L2CAP PDU format in Basic L2CAP mode on connection-oriented channels (field sizes in bits) 40
Figure 3.2: L2CAP PDU format on the Connectionless channel 41
Figure 3.3: L2CAP PDU formats in Flow Control and Retransmission Modes 42
Figure 3.4: The LFSR circuit generating the FCS. 47
Figure 3.5: Initial state of the FCS generating circuit. 47
Figure 4.1: L2CAP PDU format on the signaling channel 50
Figure 4.2: Command format 50
Figure 4.3: Command Reject packet 52
Figure 4.4: Connection Request Packet 53
Figure 4.5: Connection Response Packet 55
Figure 4.6: Configuration Request Packet 57
Figure 4.7: Configuration Request Flags field format 57
Figure 4.8: Configuration Response Packet 59
Figure 4.9: Configuration Response Flags field format 59
Figure 4.10: Disconnection Request Packet 61
Figure 4.11: Disconnection Response Packet 61
Figure 4.12: Echo Request Packet 62
Figure 4.13: Echo Response Packet 62
Figure 4.14: Information Request Packet 63
Figure 4.15: Information Response Packet 63
Figure 4.16: Create Channel Request Packet 66
Figure 4.17: Create Channel Response Packet 67
Figure 4.18: Move Channel Request Packet 69
Figure 4.19: Move Channel Response Packet 69
Figure 4.20: Move Channel Confirmation Packet 70
Figure 4.21: Move Channel Confirmation Response Packet 71
Figure 5.1: Configuration option format 72
Figure 5.2: MTU Option Format 73
Figure 5.3: Flush Timeout option format. 74
Figure 5.4: Quality of Service (QoS) option format containing Flow Specification. 76
Figure 5.5: Retransmission and Flow Control option format. 79
Figure 5.6: FCS option format 84
Figure 5.7: Extended Flow Specification option format 85
Figure 5.8: Extended Window Size option format 89
Figure 5.9: Extended Window Size values 90

Figure 6.1: States and transitions. 110
Figure 6.2: Configuration states and transitions. 111
Figure 6.3: States and transitions–AMP enabled operation 112
Figure 7.1: L2CAP fragmentation in a BR/EDR Controller 118
Figure 7.2: Example of fragmentation processes in a device with a BR/EDR Controller and USB HCI transport. 119
Figure 7.3: Segmentation and fragmentation of an SDU in a BR/EDR Controller. 120
Figure 7.4: Example of segmentation and fragment processes in a device with a BR/EDR Controller and USB HCI Transport 122
Figure 8.1: Example of the transmitter side 133
Figure 8.2: Example of the receiver side 134
Figure 8.3: Overview of the receiver side when operating in flow control mode 142
Figure 8.4: Receiver state machine 151
Figure 9.1: Creation of First Best Effort L2CAP channel or a Guaranteed L2CAP Channel 179
Figure 9.2: Creation of Subsequent Best Effort L2CAP Channel 180
Figure 9.3: Move of a Best Effort L2CAP channel Enhanced Retransmission mode enabled to an AMP with no existing best effort logical link or move of any Guaranteed L2CAP channel 187
Figure 9.4: Move of a Best Effort L2CAP channel with Enhanced Retransmission mode enabled to an AMP where a best effort logical link exists 188

11 LIST OF TABLES

Table 1.1: Terminology....30
Table 2.1: CID name space....34
Table 2.2: Types of Channel Identifiers....36
Table 3.1: Standard Control Field formats....44
Table 3.3: Extended Control Field formats....45
Table 3.2: Enhanced Control Field formats....45
Table 3.4: SAR control element format....46
Table 3.5: S control element format: type of S-frame....46
Table 4.1: Signaling Command Codes....51
Table 4.3: Reason Data values....53
Table 4.2: Reason Code Descriptions....53
Table 4.4: PSM ranges and usage....54
Table 4.5: Result values....55
Table 4.6: Status values....56
Table 4.7: Configuration Response Result codes....59
Table 4.8: InfoType definitions....63
Table 4.9: Information Response Result values....64
Table 4.10: Information Response Data fields....64
Table 4.11: Extended feature mask....65
Table 4.12: Fixed Channels Supported bit mask....66
Table 4.13: Result values....68
Table 4.14: Status values....68
Table 4.15: Result values....70
Table 4.16: Result values....71
Table 5.1: Service type definitions....76
Table 5.2: Mode definitions....79
Table 5.3: FCS types....84
Table 5.4: Traffic parameters for L2CAP QoS configuration....86
Table 5.5: Traffic parameters for L2CAP QoS configuration....87
Table 6.1: CLOSED state event table....93
Table 6.2: WAIT_CONNECT_RSP state event table....94
Table 6.3: WAIT_CONNECT state event table....95
Table 6.4: CONFIG state/substates event table: success transitions within configuration process....97
Table 6.5: CONFIG state/substates event table: non-success transitions within configuration process....98
Table 6.6: CONFIG state/substates event table: events not related to configuration process....99
Table 6.7: OPEN state event table....101
Table 6.8: WAIT_DISCONNECT state event table....102
Table 6.9: WAIT_CREATE_RSP state event table....103

Table 6.10: WAIT_CREATE state event table 103
Table 6.11: WAIT_MOVE_RSP state event table 104
Table 6.12: WAIT_MOVE state event table 106
Table 6.13: WAIT_MOVE_CONFIRM state event table 107
Table 6.14: WAIT_CONFIRM_RSP state event table 107
Table 7.1: Parameters allowed in Request 114
Table 7.2: Parameters allowed in Response 115
Table 7.3: Permitted parameter in L2CAP Configuration Response for Service Type "Best Effort" 117
Table 7.4: Permitted parameter changes in L2CAP Configuration Response for Service Type "Guaranteed" 117
Table 8.1: Summary of actions when the RetransmissionTimer is in use and R=0. 137
Table 8.2: AMP Controller timeout values 150
Table 8.3: Enhanced Retransmission mode uses the following variables and sequence numbers described in Section 8.3 153
Table 8.4: XMIT state table 164
Table 8.5: WAIT_F State Table 164
Table 8.6: RECV_State table 166
Table 8.7: REJ_SENT State table 169
Table 8.8: SREJ_SENT State Table 172

APPENDIX A: CONFIGURATION MSCs

The examples in this appendix describe a sample of the multiple possible configuration scenarios that might occur.

Figure I illustrates the basic configuration process. In this example, the devices exchange MTU information. All other values are assumed to be default.

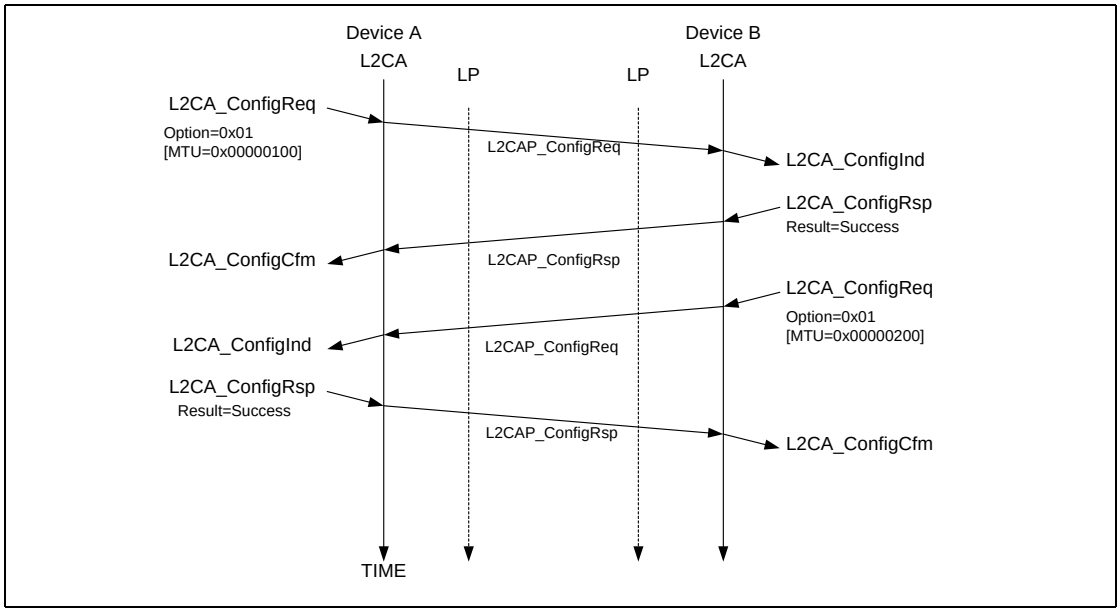

Figure I: Basic MTU exchange

Figure II on page 194 illustrates how two devices interoperate even though one device supports more options than the other does. Device A is an upgraded version. It uses a hypothetically defined option type 0x20 for link-level security. Device B rejects the command using the Configuration Response packet with result 'unknown parameter' informing Device A that option 0x20 is not understood. Device A then resends the request omitting option 0x20. Device B notices that it does not need to such a large MTU and accepts the request but includes in the response the MTU option informing Device A that Device B will not send an L2CAP packet with a payload larger than 0x80 octets over this channel. On receipt of the response, Device A could reduce the buffer allocated to hold incoming traffic.

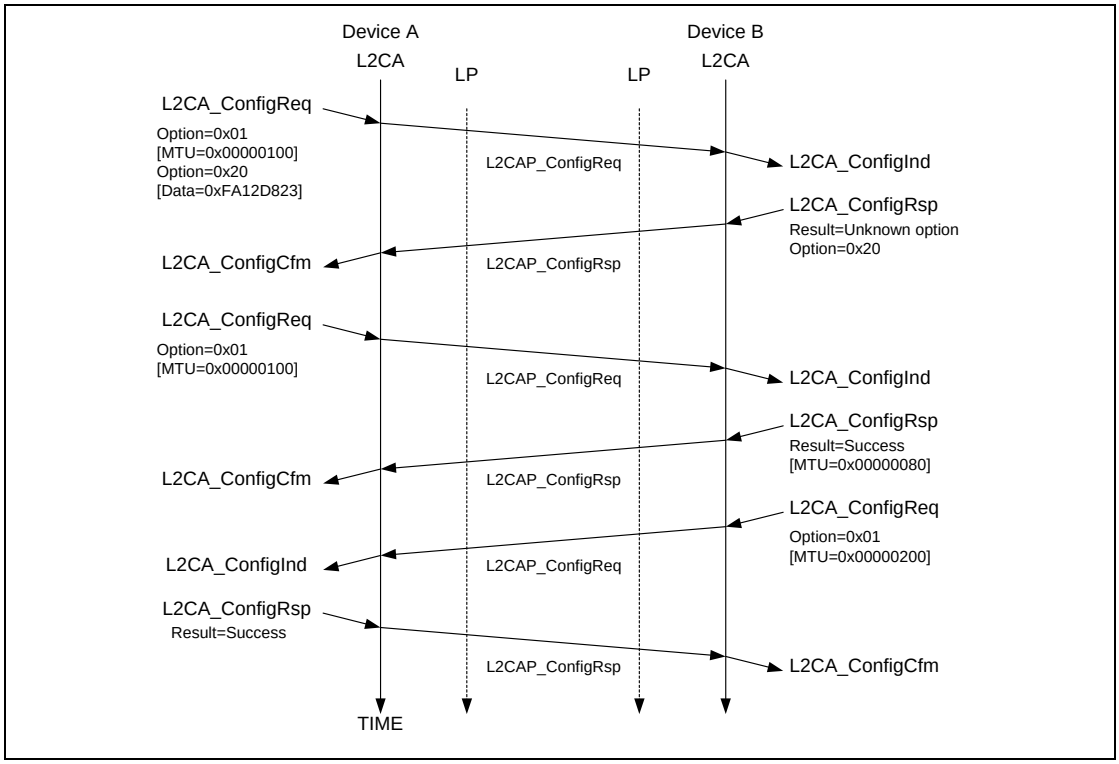

Figure II: Dealing with Unknown Options

Figure III on page 195 illustrates an unsuccessful configuration request. There are two problems described by this example. The first problem is that the configuration request is placed in an L2CAP packet that cannot be accepted by the remote device, due to its size. The remote device informs the sender of this problem using the Command Reject message. Device A then resends the configuration options using two smaller L2CAP_ConfigReq messages.

The second problem is an attempt to configure a channel with an invalid CID. For example device B may not have an open connection on that CID (0x01234567 in this example case).

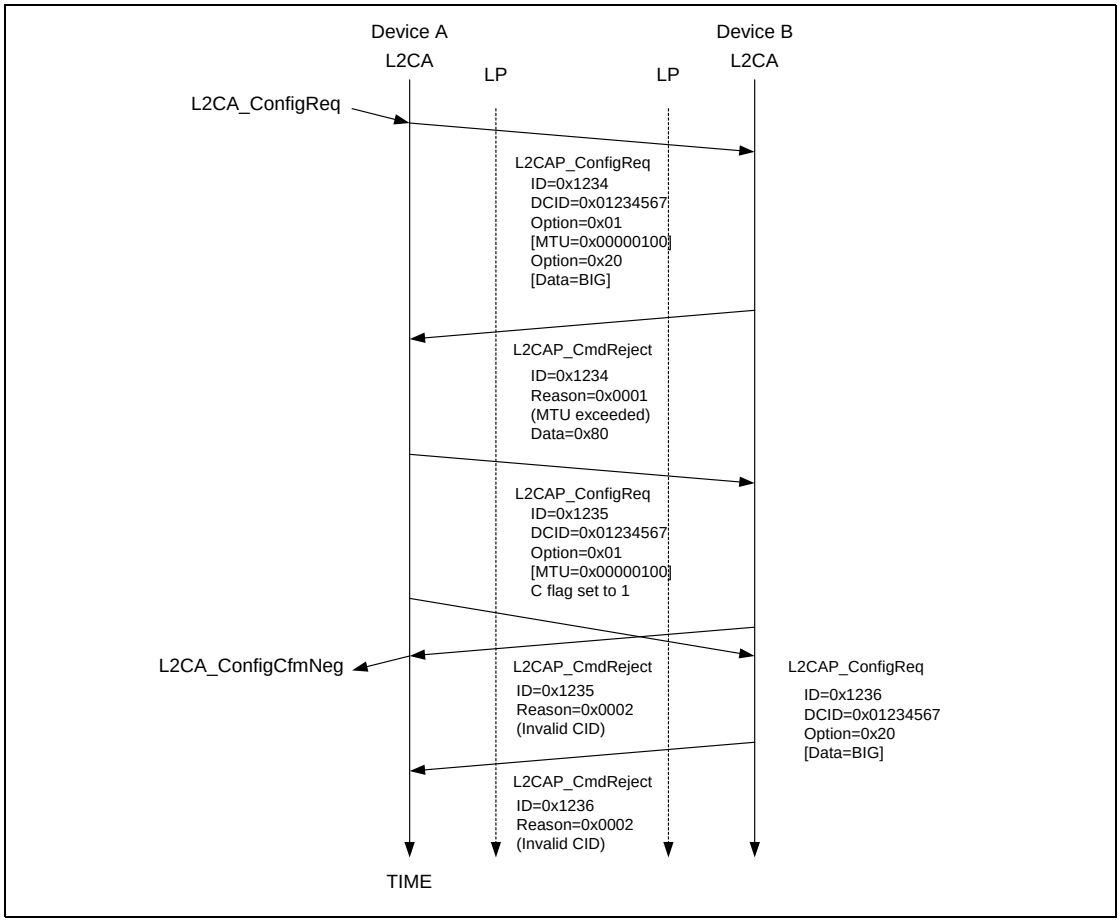

Figure III: Unsuccessful Configuration Request

Core System Package [Host volume]
Part B

SERVICE DISCOVERY PROTOCOL (SDP) SPECIFICATION

This specification defines a protocol for locating services provided by or available through a Bluetooth device.

CONTENTS

1 Introduction 201
1.1 General Description 201
1.2 Motivation 201
1.3 Requirements 201
1.4 Non-requirements and Deferred Requirements 202
1.5 Conventions 202
1.5.1 Bit And Byte Ordering Conventions 202
2 Overview 203
2.1 SDP Client-Server Interaction 203
2.2 Service Record 205
2.3 Service Attribute 206
2.3.1 Attribute ID 206
2.3.2 Attribute Value 207
2.4 Service Class 207
2.4.1 A Printer Service Class Example 208
2.5 Searching for Services 208
2.5.1 UUID 208
2.5.2 Service Search Patterns 209
2.6 Browsing for Services 209
2.6.1 Example Service Browsing Hierarchy 210
3 Data Representation 212
3.1 Data Element 212
3.2 Data Element Type Descriptor 212
3.3 Data Element Size Descriptor 213
3.4 Data Element Examples 214
4 Protocol Description 215
4.1 Transfer Byte Order 215
4.2 Protocol Data Unit Format 215
4.3 Partial Responses and Continuation State 217
4.4 Error Handling 217
4.4.1 SDP_ErrorResponse PDU 218
4.5 ServiceSearch Transaction 219
4.5.1 SDP_ServiceSearchRequest PDU 219
4.5.2 SDP_ServiceSearchResponse PDU 220
4.6 ServiceAttribute Transaction 222
4.6.1 SDP_ServiceAttributeRequest PDU 222
4.6.2 SDP_ServiceAttributeResponse PDU 224
4.7 ServiceSearchAttribute Transaction 225

4.7.1 SDP_ServiceSearchAttributeRequest PDU 225
4.7.2 SDP_ServiceSearchAttributeResponse PDU 227

5 Service Attribute Definitions 229

5.1 Universal Attribute Definitions 229
5.1.1 ServiceRecordHandle Attribute 229
5.1.2 ServiceClassIDList Attribute 230
5.1.3 ServiceRecordState Attribute 230
5.1.4 ServiceID Attribute 230
5.1.5 ProtocolDescriptorList Attribute 231
5.1.6 AdditionalProtocolDescriptorList Attribute 232
5.1.7 BrowseGroupList Attribute 233
5.1.8 LanguageBaseAttributeIDList Attribute 233
5.1.9 ServiceInfoTimeToLive Attribute 234
5.1.10 ServiceAvailability Attribute 235
5.1.11 BluetoothProfileDescriptorList Attribute 235
5.1.12 DocumentationURL Attribute 236
5.1.13 ClientExecutableURL Attribute 236
5.1.14 IconURL Attribute 236
5.1.15 ServiceName Attribute 237
5.1.16 ServiceDescription Attribute 238
5.1.17 ProviderName Attribute 238
5.1.18 Reserved Universal Attribute IDs 238
5.2 ServiceDiscoveryServer Service Class Attribute Definitions ... 238
5.2.1 ServiceRecordHandle Attribute 238
5.2.2 ServiceClassIDList Attribute 239
5.2.3 VersionNumberList Attribute 239
5.2.4 ServiceDatabaseState Attribute 239
5.2.5 Reserved Attribute IDs 240
5.3 BrowseGroupDescriptor Service Class Attribute Definitions ... 240
5.3.1 ServiceClassIDList Attribute 240
5.3.2 GroupID Attribute 241
5.3.3 Reserved Attribute IDs 241

6 Security 242

1 INTRODUCTION

1.1 GENERAL DESCRIPTION

The service discovery protocol (SDP) provides a means for applications to discover which services are available and to determine the characteristics of those available services.

1.2 MOTIVATION

Service Discovery in the Bluetooth environment, where the set of services that are available changes dynamically based on the RF proximity of devices in motion, is qualitatively different from service discovery in traditional network-based environments. The service discovery protocol defined in this specification is intended to address the unique characteristics of the Bluetooth environment. See section , “Appendix A – Background Information,” on page 243, for further information on this topic.

1.3 REQUIREMENTS

The following capabilities have been identified as requirements for version 1.0 of the Service Discovery Protocol.

1. SDP shall provide the ability for clients to search for needed services based on specific attributes of those services.
2. SDP shall permit services to be discovered based on the class of service.
3. SDP shall enable browsing of services without a priori knowledge of the specific characteristics of those services.
4. SDP shall provide the means for the discovery of new services that become available when devices enter RF proximity with a client device as well as when a new service is made available on a device that is in RF proximity with the client device.
5. SDP shall provide a mechanism for determining when a service becomes unavailable when devices leave RF proximity with a client device as well as when a service is made unavailable on a device that is in RF proximity with the client device.
6. SDP shall provide for services, classes of services, and attributes of services to be uniquely identified.
7. SDP shall allow a client on one device to discover a service on another device without consulting a third device.
8. SDP should be suitable for use on devices of limited complexity.
9. SDP shall provide a mechanism to incrementally discover information about the services provided by a device. This is intended to minimize the quantity

of data that must be exchanged in order to determine that a particular service is not needed by a client.

10. SDP should support the caching of service discovery information by intermediary agents to improve the speed or efficiency of the discovery process.
11. SDP should be transport independent.
12. SDP shall function while using L2CAP as its transport protocol.
13. SDP shall permit the discovery and use of services that provide access to other service discovery protocols.
14. SDP shall support the creation and definition of new services without requiring registration with a central authority.

1.4 NON-REQUIREMENTS AND DEFERRED REQUIREMENTS

The Bluetooth SIG recognizes that the following capabilities are related to service discovery. These items are not addressed in SDP version 1.0. However, some may be addressed in future revisions of the specification.

1. SDP 1.0 does not provide access to services. It only provides access to information about services.
2. SDP 1.0 does not provide brokering of services.
3. SDP 1.0 does not provide for negotiation of service parameters.
4. SDP 1.0 does not provide for billing of service use.
5. SDP 1.0 does not provide the means for a client to control or change the operation of a service.
6. SDP 1.0 does not provide an event notification when services, or information about services, become unavailable.
7. SDP 1.0 does not provide an event notification when attributes of services are modified.
8. This specification does not define an application programming interface for SDP.
9. SDP 1.0 does not provide support for service agent functions such as service aggregation or service registration.

1.5 CONVENTIONS

1.5.1 Bit And Byte Ordering Conventions

When multiple bit fields are contained in a single byte and represented in a drawing in this specification, the more significant (high-order) bits are shown toward the left and less significant (low-order) bits toward the right.

Multiple-byte fields are drawn with the more significant bytes toward the left and the less significant bytes toward the right. Multiple-byte fields are transferred in network byte order. See Section 4.1 on page 215.

2 OVERVIEW

2.1 SDP CLIENT-SERVER INTERACTION

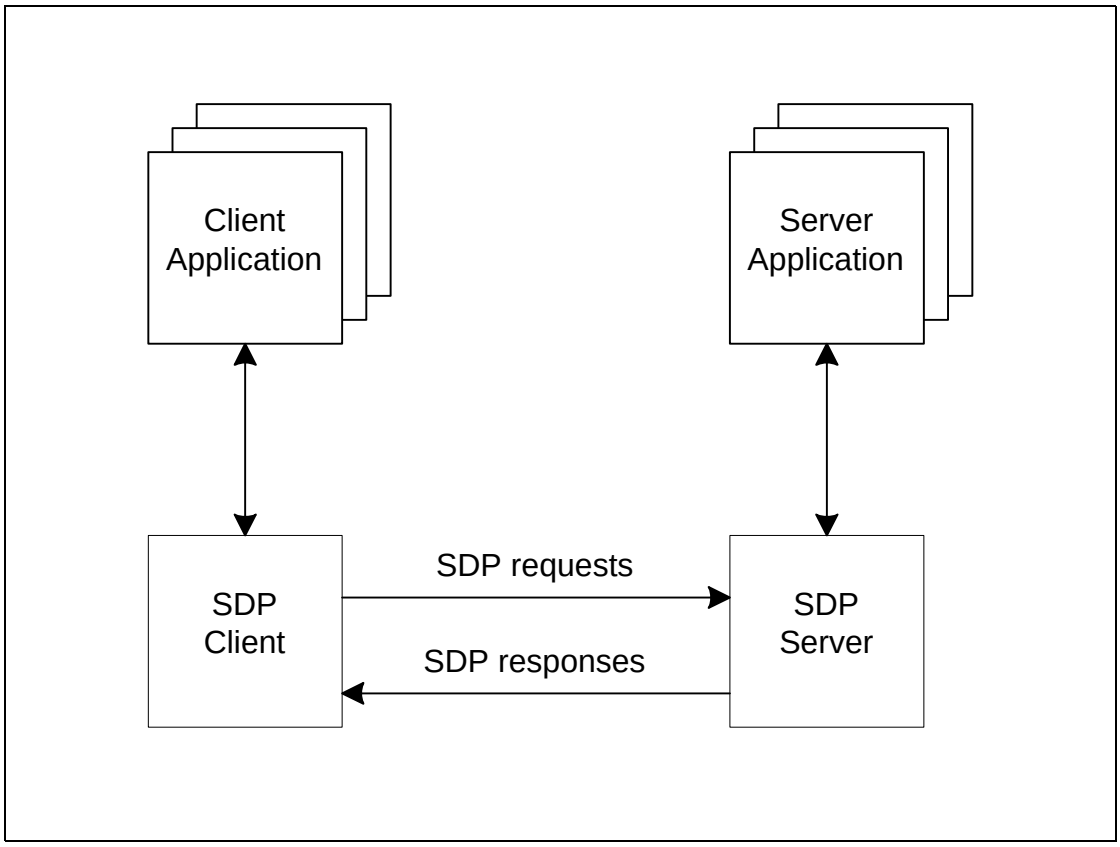

Figure 2.1: SDP Client-Server Interaction

The service discovery mechanism provides the means for client applications to discover the existence of services provided by server applications as well as the attributes of those services. The attributes of a service include the type or class of service offered and the mechanism or protocol information needed to utilize the service.

As far as the Service Discovery Protocol (SDP) is concerned, the configuration shown in SDP Client-Server Interaction Figure 2.1SDP Client-Server Interaction can be simplified to that shown in Simplified SDP Client-Server InteractionSimplified SDP Client-Server InteractionSimplified SDP Client-Server InteractionFigure 2.2.

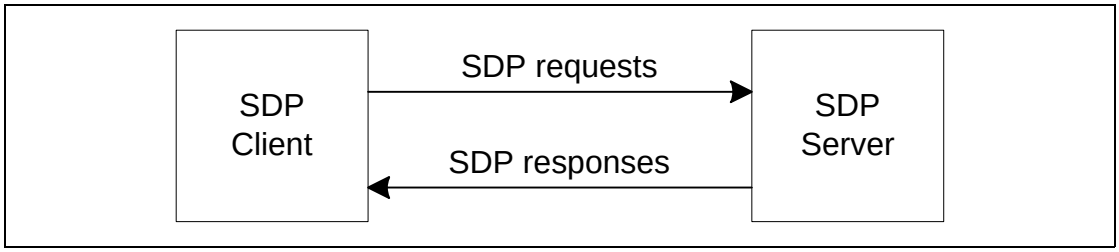

Figure 2.2: Simplified SDP Client-Server Interaction

SDP involves communication between an SDP server and an SDP client. The server maintains a list of service records that describe the characteristics of services associated with the server. Each service record contains information about a single service. A client can retrieve information from a service record maintained by the SDP server by issuing an SDP request.

If the client, or an application associated with the client, decides to use a service, it opens a separate connection to the service provider in order to utilize the service. SDP provides a mechanism for discovering services and their attributes (including associated service access protocols), but it does not provide a mechanism for utilizing those services (such as delivering the service access protocols).

There shall be a maximum of one active SDP server per Bluetooth device. If a Bluetooth device acts only as a client, it needs no SDP server. A single Bluetooth device can function both as an SDP server and as an SDP client. If multiple applications on a device provide services, an SDP server can act on behalf of those service providers to handle requests for information about the services that they provide.

Similarly, multiple client applications can utilize an SDP client to query servers on behalf of the client applications.

The set of SDP servers that are available to an SDP client will change dynamically based on the RF proximity of the servers to the client. When a server becomes available, a potential client must be notified by a means other than SDP so that the client can use SDP to query the server about its services. Similarly, when a server leaves proximity or becomes unavailable for any reason, there is no explicit notification via the service discovery protocol. However, the client can use SDP to poll the server and may infer that the server is not available if it no longer responds to requests.

Additional information regarding application interaction with SDP shall be contained in the Bluetooth Service Discovery Profile document.

2.2 SERVICE RECORD

A service is any entity that can provide information, perform an action, or control a resource on behalf of another entity. A service may be implemented as software, hardware, or a combination of hardware and software.

All of the information about a service that is maintained by an SDP server is contained within a single service record. The service record shall only be a list of service attributes.

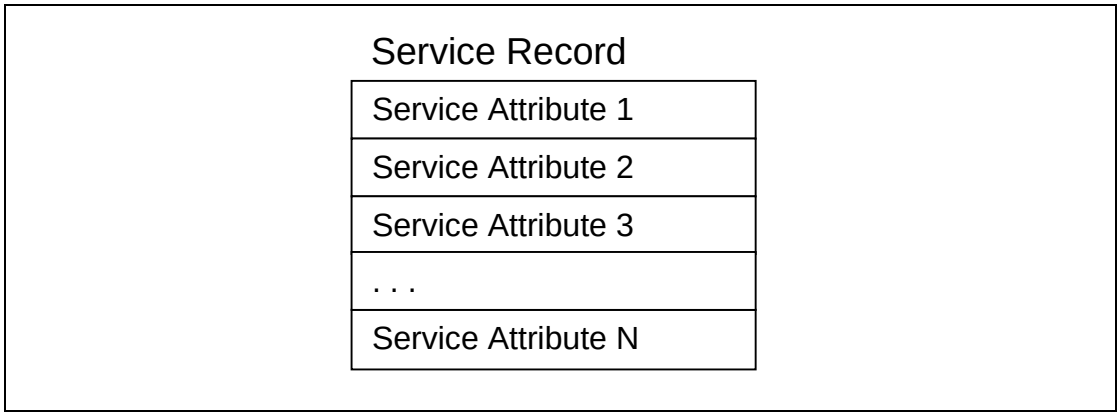

Figure 2.3: Service Record

A service record handle is a 32-bit number that shall uniquely identiy each service record within an SDP server. It is important to note that, in general, each handle is unique only within each SDP server. If SDP server S1 and SDP server S2 both contain identical service records (representing the same service), the service record handles used to reference these identical service records are completely independent. The handle used to reference the service on S1 will be meaningless if presented to S2.

The service discovery protocol does not provide a mechanism for notifying clients when service records are added to or removed from an SDP server. While an L2CAP (Logical Link Control and Adaptation Protocol) connection is established to a server, a service record handle acquired from the server shall remain valid unless the service record it represents is removed. If a service is removed from the server, further requests to the server (during the L2CAP connection in which the service record handle was acquired) using the service's (now stale) record handle shall result in an error response indicating an invalid service record handle. An SDP server shall ensure that no service record handle values are re-used while an L2CAP connection remains established. Service record handles shall remain valid across successive L2CAP connections while the ServiceDatabaseState attribute value remains unchanged. Further, service record handles should remain valid until such time that the corresponding service is permanently removed or changes in an incompatible way. See the ServiceRecordState and ServiceDatabaseState attributes in Section 5 on page 229.

A device may have a service record with a service record handle of 0x00000000 representing the SDP server itself. This service record contains attributes for the SDP server and the protocol it supports. For example, one of its attributes is the list of SDP protocol versions supported by the server.

2.3 SERVICE ATTRIBUTE

Each service attribute describes a single characteristic of a service. Some examples of service attributes are:

ServiceClassIDList	Identifies the type of service represented by a service record. In other words, the list of classes of which the service is an instance
ServiceID	Uniquely identifies a specific instance of a service
ProtocolDescriptorList	Specifies the protocol stack(s) that may be used to utilize a service
ProviderName	The textual name of the individual or organization that provides a service
IconURL	Specifies a URL that refers to an icon image that may be used to represent a service
ServiceName	A text string containing a human-readable name for the service
ServiceDescription	A text string describing the service

See Section 5.1 on page 229, for attribute definitions that are common to all service records. Service providers can also define their own service attributes.

A service attribute consists of two components: an attribute ID and an attribute value.

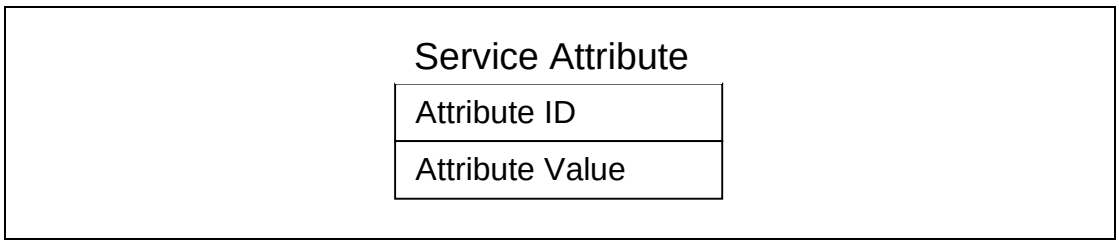

Figure 2.4: Service Attribute

2.3.1 Attribute ID

An attribute ID is a 16-bit unsigned integer that distinguishes each service attribute from other service attributes within a service record. The attribute ID also identifies the semantics of the associated attribute value.

A service class definition specifies each of the attribute IDs for a service class and assigns a meaning to the attribute value associated with each attribute ID. Each attribute ID is defined to be unique only within each service class.

All services belonging to a given service class assign the same meaning to each particular attribute ID. See Section 2.4 on page 207.

In the Service Discovery Protocol, an attribute ID is represented as a data element. See Section 3 on page 212.

2.3.2 Attribute Value

The attribute value is a variable length field whose meaning is determined by the attribute ID associated with it and by the service class of the service record in which the attribute is contained. In the Service Discovery Protocol, an attribute value is represented as a data element. (See Section 3 on page 212.) Generally, any type of data element is permitted as an attribute value, subject to the constraints specified in the service class definition that assigns an attribute ID to the attribute and assigns a meaning to the attribute value. See Section 5 on page 229, for attribute value examples.

2.4 SERVICE CLASS

Each service is an instance of a service class. The service class definition provides the definitions of all attributes contained in service records that represent instances of that class. Each attribute definition specifies the numeric value of the attribute ID, the intended use of the attribute value, and the format of the attribute value. A service record contains attributes that are specific to a service class as well as universal attributes that are common to all services.

Each service class is also assigned a unique identifier. This service class identifier is contained in the attribute value for the ServiceClassIDList attribute, and is represented as a UUID (see Section 2.5.1 on page 208). Since the format and meanings of many attributes in a service record are dependent on the service class of the service record, the ServiceClassIDList attribute is very important. Its value shall be examined or verified before any class-specific attributes are used. Since all of the attributes in a service record must conform to all of the service's classes, the service class identifiers contained in the ServiceClassIDList attribute are related. Typically, each service class is a subclass of another class whose identifier is contained in the list. A service subclass definition differs from its superclass in that the subclass contains additional attribute definitions that are specific to the subclass. The service class identifiers in the ServiceClassIDList attribute should be listed in order from the most specific class to the most general class.

When a new service class is defined that is a subclass of an existing service class, the new service class retains all of the attributes defined in its superclass. Additional attributes may be defined that are specific to the new service class. In other words, the mechanism for adding new attributes to some of the

instances of an existing service class is to create a new service class that is a subclass of the existing service class.

2.4.1 A Printer Service Class Example

A color postscript printer with duplex capability might conform to 4 Service-Class definitions and have a ServiceClassIDList with UUIDs (See Section 2.5.1 on page 208.) representing the following ServiceClasses:

DuplexColorPostscriptPrinterServiceClassID,
ColorPostscriptPrinterServiceClassID,
PostscriptPrinterServiceClassID,
PrinterServiceClassID

Note that this example is only illustrative. This may not be a practical printer class hierarchy.

2.5 SEARCHING FOR SERVICES

The Service Search transaction allows a client to retrieve the service record handles for particular service records based on the values of attributes contained within those service records. Once an SDP client has a service record handle, it can request the values of specific attributes.

The capability search for service records based on the values of arbitrary attributes is not provided. Rather, the capability is provided to search only for attributes whose values are Universally Unique Identifiers[1] (UUIDs). Important attributes of services that can be used to search for a service are represented as UUIDs.

2.5.1 UUID

A UUID is a universally unique identifier that is guaranteed to be unique across all space and all time. UUIDs can be independently created in a distributed fashion. No central registry of assigned UUIDs is required. A UUID is a 128-bit value.

To reduce the burden of storing and transferring 128-bit UUID values, a range of UUID values has been pre-allocated for assignment to often-used, registered purposes. The first UUID in this pre-allocated range is known as the Bluetooth Base UUID and has the value 00000000-0000-1000-8000-00805F9B34FB, from the Bluetooth Assigned Numbers document. UUID values in the pre-allocated range have aliases that are represented as 16-bit or

1. The format of UUIDs is defined by the International Organization for Standardization in ISO/IEC 11578:1996. “Information technology – Open Systems Interconnection – Remote Procedure Call (RPC)”

32-bit values. These aliases are often called 16-bit and 32-bit UUIDs, but it is important to note that each actually represents a 128-bit UUID value.

The full 128-bit value of a 16-bit or 32-bit UUID may be computed by a simple arithmetic operation.

128_bit_value = 16_bit_value * 2^{96} + Bluetooth_Base_UUID

128_bit_value = 32_bit_value * 2^{96} + Bluetooth_Base_UUID

A 16-bit UUID may be converted to 32-bit UUID format by zero-extending the 16-bit value to 32-bits. An equivalent method is to add the 16-bit UUID value to a zero-valued 32-bit UUID.

Note that two 16-bit UUIDs may be compared directly, as may two 32-bit UUIDs or two 128-bit UUIDs. If two UUIDs of differing sizes are to be compared, the shorter UUID must be converted to the longer UUID format before comparison.

2.5.2 Service Search Patterns

A service search pattern is a list of UUIDs used to locate matching service records. A service search pattern matches a service record if each and every UUID in the service search pattern is contained within any of the service record's attribute values. The UUIDs need not be contained within any specific attributes or in any particular order within the service record. The service search pattern matches if the UUIDs it contains constitute a subset of the UUIDs in the service record's attribute values. The only time a service search pattern does not match a service record is if the service search pattern contains at least one UUID that is not contained within the service record's attribute values. Note also that a valid service search pattern must contain at least one UUID.

2.6 BROWSING FOR SERVICES

Normally, a client searches for services based on some desired characteristic(s) (represented by a UUID) of the services. However, there are times when it is desirable to discover which types of services are described by an SDP server's service records without any a priori information about the services. This process of looking for any offered services is termed browsing. In SDP, the mechanism for browsing for services is based on an attribute shared by all service classes. This attribute is called the BrowseGroupList attribute. The value of this attribute contains a list of UUIDs. Each UUID represents a browse group with which a service may be associated for the purpose of browsing.

When a client desires to browse an SDP server's services, it creates a service search pattern containing the UUID that represents the root browse group. All services that may be browsed at the top level are made members of the root

browse group by having the root browse group's UUID as a value within the BrowseGroupList attribute.

Normally, if an SDP server has relatively few services, all of its services will be placed in the root browse group. However, the services offered by an SDP server may be organized in a browse group hierarchy, by defining additional browse groups below the root browse group. Each of these additional browse groups is described by a service record with a service class of BrowseGroupDescriptor.

A browse group descriptor service record defines a new browse group by means of its Group ID attribute. In order for a service contained in one of these newly defined browse groups to be browseable, the browse group descriptor service record that defines the new browse group must in turn be browseable. The hierarchy of browseable services that is provided by the use of browse group descriptor service records allows the services contained in an SDP server to be incrementally browsed and is particularly useful when the SDP server contains many service records.

2.6.1 Example Service Browsing Hierarchy

Here is a fictitious service browsing hierarchy that illuminates the manner in which browse group descriptors are used. Browse group descriptor service records are identified with (G); other service records with (S).

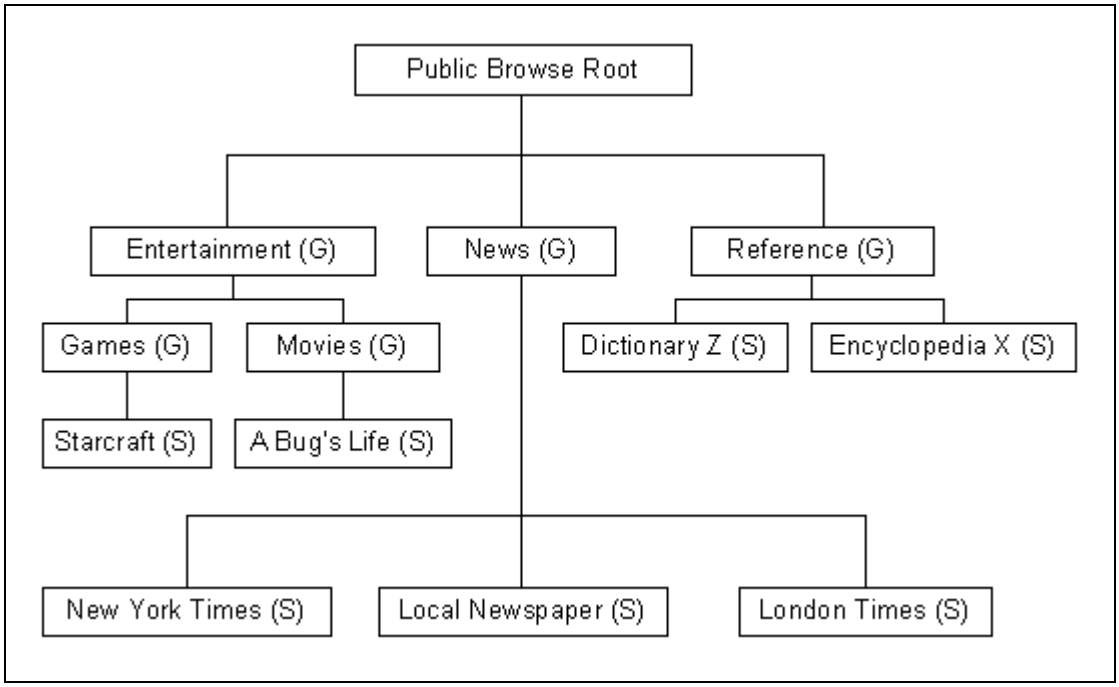

Figure 2.5: Attribute ID

This table shows the services records and service attributes necessary to implement the browse hierarchy.

Service Name	Service Class	Attribute Name	Attribute Value
Entertainment	BrowseGroupDescriptor	BrowseGroupList	PublicBrowseRoot
		GroupID	EntertainmentID
News	BrowsegroupDescriptor	BrowseGroupList	PublicBrowseRoot
		GroupID	NewsID
Reference	BrowseGroupDescriptor	BrowseGroupList	PublicBrowseRoot
		GroupID	ReferenceID
Games	BrowseGroupDescriptor	BrowseGroupList	EntertainmentID
		GroupID	GamesID
Movies	BrowseGroupDescriptor	BrowseGroupList	EntertainmentID
		GroupID	MoviesID
Starcraft	Video Game Class ID	BrowseGroupList	GamesID
A Bug's Life	Movie Class ID	BrowseGroupList	MovieID
Dictionary Z	Dictionary Class ID	BrowseGroupList	ReferenceID
Encyclopedia X	Encyclopedia Class ID	BrowseGroupList	ReferenceID
New York Times	Newspaper ID	BrowseGroupList	NewspaperID
London Times	Newspaper ID	BrowseGroupList	NewspaperID
Local Newspaper	Newspaper ID	BrowseGroupList	NewspaperID

Table 2.1: Service Browsing Hierarchy

3 DATA REPRESENTATION

Attribute values can contain information of various types with arbitrary complexity; thus enabling an attribute list to be generally useful across a wide variety of service classes and environments.

SDP defines a simple mechanism to describe the data contained within an attribute ID, attribute ID range, and attribute value. The primitive construct used is the data element.

3.1 DATA ELEMENT

A data element is a typed data representation. It consists of two fields: a header field and a data field. The header field, in turn, is composed of two parts: a type descriptor and a size descriptor. The data is a sequence of bytes whose length is specified in the size descriptor (described in Section 3.3 on page 213) and whose meaning is (partially) specified by the type descriptor.

3.2 DATA ELEMENT TYPE DESCRIPTOR

A data element type is represented as a 5-bit type descriptor. The type descriptor is contained in the most significant (high-order) 5 bits of the first byte of the data element header. The following types have been defined.

Type Descriptor Value	Valid Size Descriptor Values	Type Description
0	0	Nil, the null type
1	0, 1, 2, 3, 4	Unsigned Integer
2	0, 1, 2, 3, 4	Signed twos-complement integer
3	1, 2, 4	UUID, a universally unique identifier
4	5, 6, 7	Text string
5	0	Boolean[1]
6	5, 6, 7	Data element sequence, a data element whose data field is a sequence of data elements
7	5, 6, 7	Data element alternative, data element whose data field is a sequence of data elements from which one data element is to be selected.
8	5, 6, 7	URL, a uniform resource locator
9-31		Reserved

Table 3.1: Data Element

1. False is represented by the value 0, and true is represented by the value 1. However, to maximize interoperability, any non-zero value received must be accepted as representing true.

3.3 DATA ELEMENT SIZE DESCRIPTOR

The data element size descriptor is represented as a 3-bit size index followed by 0, 8, 16, or 32 bits. The size index is contained in the least significant (low-order) 3 bits of the first byte of the data element header. The size index is encoded as follows.

Size Index	Additional bits	Data Size
0	0	1 byte. Exception: if the data element type is nil, the data size is 0 bytes.
1	0	2 bytes
2	0	4 bytes
3	0	8 bytes
4	0	16 bytes
5	8	The data size is contained in the additional 8 bits, which are interpreted as an unsigned integer.
6	16	The data size is contained in the additional 16 bits, which are interpreted as an unsigned integer.
7	32	The data size is contained in the additional 32 bits, which are interpreted as an unsigned integer.

Table 3.2: Data element size

3.4 DATA ELEMENT EXAMPLES

Nil is represented as:

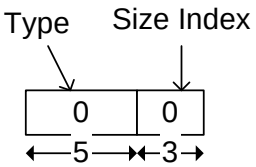

A 16-bit signed integer is represented as:

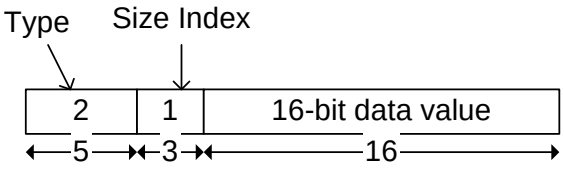

The 3 character ASCII string "Hat" is represented as:

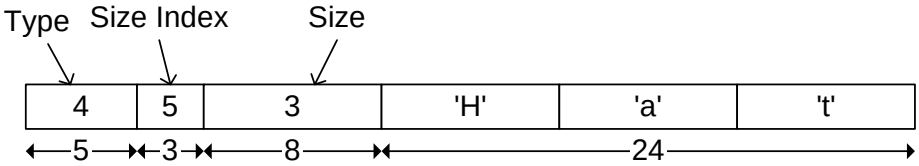

Figure 3.1: Data Element

4 PROTOCOL DESCRIPTION

SDP is a simple protocol with minimal requirements on the underlying transport. It can function over a reliable packet transport (or even unreliable, if the client implements timeouts and repeats requests as necessary).

SDP uses a request/response model where each transaction consists of one request protocol data unit (PDU) and one response PDU. In the case where SDP is used with the Bluetooth L2CAP transport protocol, no more than one SDP request PDU per connection to a given SDP server may be outstanding at a given instant. In other words, a client does not issue a further request to a server prior to receiving a response to the current request before issuing another request on the same L2CAP connection. Limiting SDP to sending one unacknowledged request PDU provides a simple form of flow control.

The protocol examples found in Appendix B – Example SDP Transactions, could be helpful in understanding the protocol transactions.

4.1 TRANSFER BYTE ORDER

The service discovery protocol shall transfer multiple-byte fields in standard network byte order (Big Endian), with more significant (high-order) bytes being transferred before less-significant (low-order) bytes.

4.2 PROTOCOL DATA UNIT FORMAT

Every SDP PDU consists of a PDU header followed by PDU-specific parameters. The header contains three fields: a PDU ID, a Transaction ID, and a ParameterLength. Each of these header fields is described here. Parameters may include a continuation state parameter, described below; PDU-specific parameters for each PDU type are described later in separate PDU descriptions.

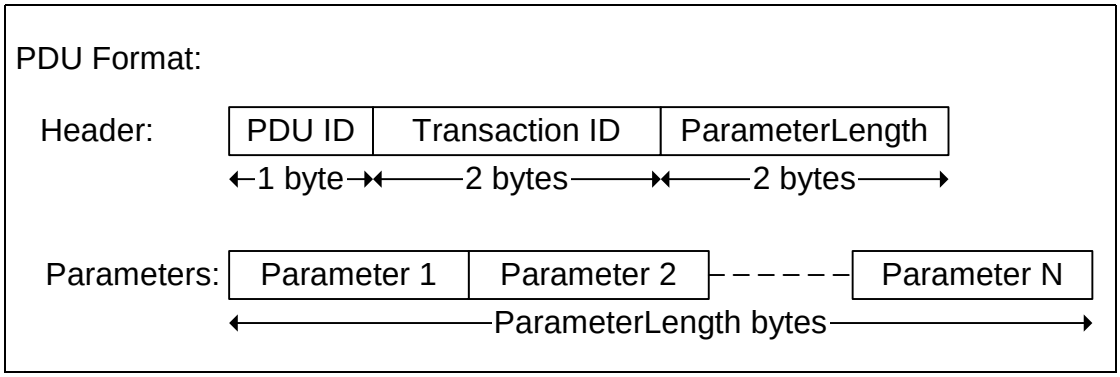

Figure 4.1: Protocl Data Unit Format

PDU ID: *Size: 1 Byte*

Value	Parameter Description
N	The PDU ID field identifies the type of PDU. I.e. its meaning and the specific parameters.
0x00	Reserved
0x01	SDP_ErrorResponse
0x02	SDP_ServiceSearchRequest
0x03	SDP_ServiceSearchResponse
0x04	SDP_ServiceAttributeRequest
0x05	SDP_ServiceAttributeResponse
0x06	SDP_ServiceSearchAttributeRequest
0x07	SDP_ServiceSearchAttributeResponse
0x07-0xFF	Reserved

TransactionID: *Size: 2 Bytes*

Value	Parameter Description
N	The TransactionID field uniquely identifies request PDUs and is used to match response PDUs to request PDUs. The SDP client can choose any value for a request's TransactionID provided that it is different from all outstanding requests. The TransactionID value in response PDUs is required to be the same as the request that is being responded to. Range: 0x0000 – 0xFFFF

ParameterLength: *Size: 2 Bytes*

Value	Parameter Description
N	The ParameterLength field specifies the length (in bytes) of all parameters contained in the PDU. Range: 0x0000 – 0xFFFF

4.3 PARTIAL RESPONSES AND CONTINUATION STATE

Some SDP requests may require responses that are larger than can fit in a single response PDU. In this case, the SDP server shall generate a partial response along with a continuation state parameter. The continuation state parameter can be supplied by the client in a subsequent request to retrieve the next portion of the complete response. The continuation state parameter is a variable length field whose first byte contains the number of additional bytes of continuation information in the field. The format of the continuation information is not standardized among SDP servers. Each continuation state parameter is meaningful only to the SDP server that generated it.

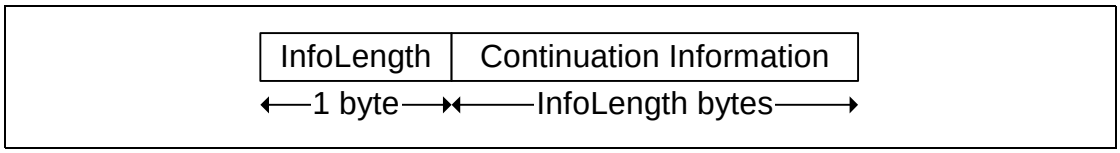

Figure 4.2: Continuation State Format

After a client receives a partial response and the accompanying continuation state parameter, it can re-issue the original request (with a new transaction ID) and include the continuation state in the new request indicating to the server that the remainder of the original response is desired. The maximum allowable value of the InfoLength field is 16 (0x10).

Note that, unless otherwise stated in a PDU response specification, an SDP server can split a response at any arbitrary boundary when it generates a partial response. The SDP server may select the boundary based on the contents of the reply, but is not required to do so. Therefore, length fields give the lengths as measured in the complete assembled record, not the length of the fields in the partial segment.When a service record is segmented into partial responses all attribute list values are relative to the complete record, not relevant to the partial record.

4.4 ERROR HANDLING

Each transaction consists of a request and a response PDU. Generally, each type of request PDU has a corresponding type of response PDU. However, if the server determines that a request is improperly formatted or for any reason the server cannot respond with the appropriate PDU type, it shall respond with an SDP_ErrorResponse PDU.

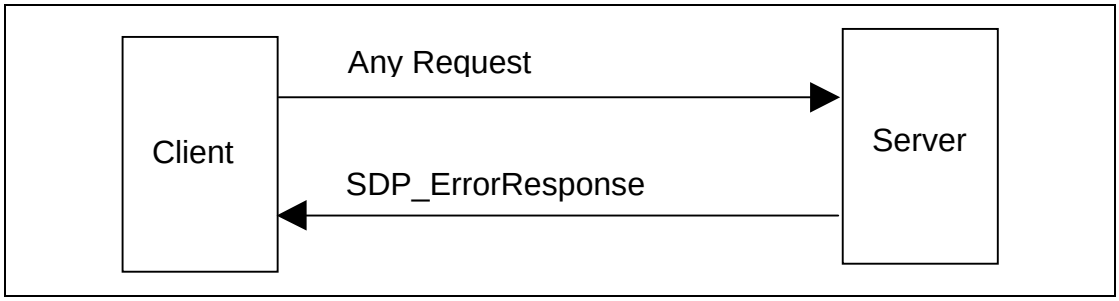

Figure 4.3: Error Handling

4.4.1 SDP_ErrorResponse PDU

PDU Type	PDU ID	Parameters
SDP_ErrorResponse	0x01	ErrorCode

Description:

The SDP server generates this PDU type in response to an improperly formatted request PDU or when the SDP server, for whatever reason, cannot generate an appropriate response PDU.

PDU Parameters:

ErrorCode: *Size: 2 Bytes*

Value	Parameter Description
N	The ErrorCode identifies the reason that an SDP_ErrorResponse PDU was generated.
0x0000	Reserved
0x0001	Invalid/unsupported SDP version
0x0002	Invalid Service Record Handle
0x0003	Invalid request syntax
0x0004	Invalid PDU Size
0x0005	Invalid Continuation State
0x0006	Insufficient Resources to satisfy Request
0x0007-0xFFFF	Reserved

Note: Invalid PDU size should be used, for example, if an incoming request PDU's length is inconsistent with the specification of that request PDU or the length parameter of an incoming request PDU is inconsistent with that request PDU's actual contents.

4.5 SERVICESEARCH TRANSACTION

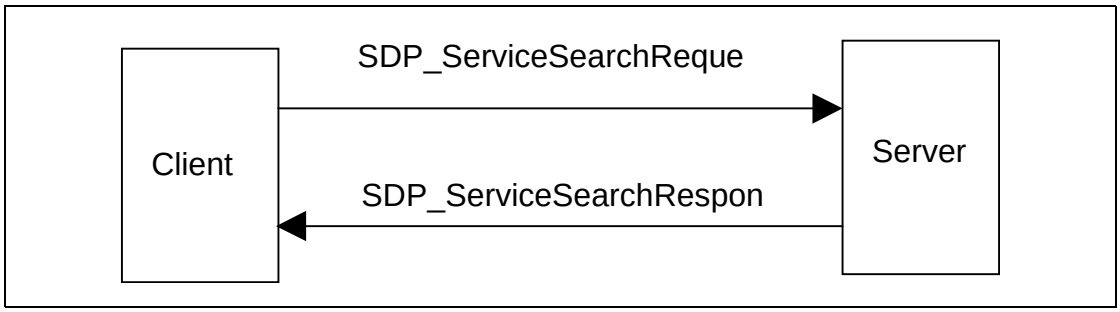

Figure 4.4: ServiceSearch Transaction

4.5.1 SDP_ServiceSearchRequest PDU

PDU Type	PDU ID	Parameters
SDP_ServiceSearchRequest	0x02	ServiceSearchPattern, MaximumServiceRecordCount, ContinuationState

Description:

The SDP client generates an SDP_ServiceSearchRequest to locate service records that match the service search pattern given as the first parameter of the PDU. Upon receipt of this request, the SDP server shall examine its service record data base and return an SDP_ServiceSearchResponse containing the service record handles of service records within its service record database that match the given service search pattern, or an appropriate error response.

Note that no mechanism is provided to request information for all service records. However, see Section 2.6 on page 209 for a description of a mechanism that permits browsing for non-specific services without a priori knowledge of the services.

PDU Parameters:

ServiceSearchPattern: *Size: Varies*

Value	Parameter Description
Data Element Sequence	The ServiceSearchPattern is a data element sequence where each element in the sequence is a UUID. The sequence shall contain at least one UUID. The maximum number of UUIDs in the sequence is 12[1]. The list of UUIDs constitutes a service search pattern.

1. The value of 12 has been selected as a compromise between the scope of a service search and the size of a search request PDU. It is not expected that more than 12 UUIDs will be useful in a service search pattern.

MaximumServiceRecordCount: *Size: 2 Bytes*

Value	Parameter Description
N	MaximumServiceRecordCount is a 16-bit count specifying the maximum number of service record handles to be returned in the response(s) to this request. The SDP server shall not return more handles than this value specifies. If more than N service records match the request, the SDP server determines which matching service record handles to return in the response(s). Range: 0x0001-0xFFFF

ContinuationState: *Size: 1 to 17 Bytes*

Value	Parameter Description
Continuation State	ContinuationState consists of an 8-bit count, N, of the number of bytes of continuation state information, followed by the N bytes of continuation state information that were returned in a previous response from the server. N is required to be less than or equal to 16. If no continuation state is to be provided in the request, N is set to 0.

4.5.2 SDP_ServiceSearchResponse PDU

PDU Type	PDU ID	Parameters
SDP_ServiceSearchResponse	0x03	TotalServiceRecordCount, CurrentServiceRecordCount, ServiceRecordHandleList, ContinuationState

Description:

The SDP server generates an SDP_ServiceSearchResponse upon receipt of a valid SDP_ServiceSearchRequest. The response contains a list of service record handles for service records that match the service search pattern given in the request. If a partial response is generated, it shall contain an integral number of complete service record handles; a service record handle value shall not be split across multiple PDUs.

PDU Parameters:

TotalServiceRecordCount: *Size: 2 Bytes*

Value	Parameter Description
N	The TotalServiceRecordCount is an integer containing the number of service records that match the requested service search pattern. If no service records match the requested service search pattern, this parameter is set to 0. N should never be larger than the MaximumServiceRecordCount value specified in the SDP_ServiceSearchRequest. When multiple partial responses are used, each partial response contains the same value for TotalServiceRecordCount. Range: 0x0000-0xFFFF

CurrentServiceRecordCount: *Size: 2 Bytes*

Value	Parameter Description
N	The CurrentServiceRecordCount is an integer indicating the number of service record handles that are contained in the next parameter. If no service records match the requested service search pattern, this parameter is set to 0. N should never be larger than the TotalServiceRecordCount value specified in the current response. Range: 0x0000-0xFFFF

ServiceRecordHandleList: *Size: (CurrentServiceRecordCount*4) Bytes*

Value	Parameter Description
List of 32-bit handles	The ServiceRecordHandleList contains a list of service record handles. The number of handles in the list is given in the CurrentServiceRecordCount parameter. Each of the handles in the list refers to a service record that matches the requested service search pattern. Note that this list of service record handles does not have the format of a data element. It contains no header fields, only the 32-bit service record handles.

ContinuationState: *Size: 1 to 17 Bytes*

Value	Parameter Description
Continuation State	ContinuationState consists of an 8-bit count, N, of the number of bytes of continuation state information, followed by the N bytes of continuation information. If the current response is complete, this parameter consists of a single byte with the value 0. If a partial response is contained in the PDU, the ContinuationState parameter may be supplied in a subsequent request to retrieve the remainder of the response.

4.6 SERVICEATTRIBUTE TRANSACTION

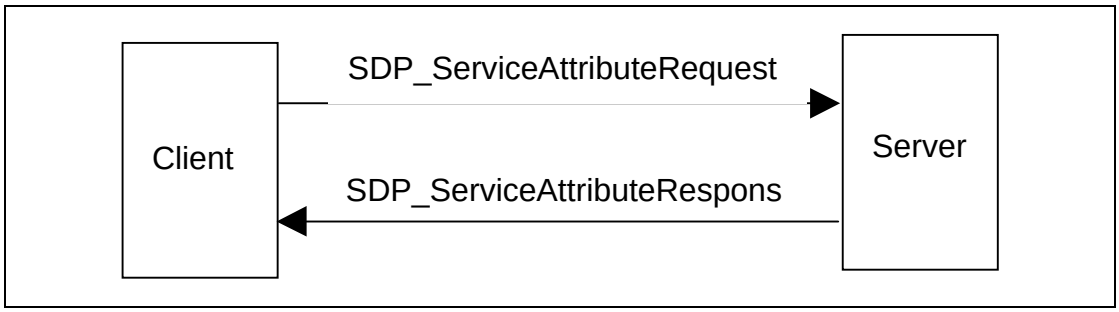

Figure 4.5: ServiceAttribute Transaction

4.6.1 SDP_ServiceAttributeRequest PDU

PDU Type	PDU ID	Parameters
SDP_ServiceAttributeRequest	0x04	ServiceRecordHandle, MaximumAttributeByteCount, AttributeIDList, ContinuationState

Description:

The SDP client generates an SDP_ServiceAttributeRequest to retrieve specified attribute values from a specific service record. The service record handle of the desired service record and a list of desired attribute IDs to be retrieved from that service record are supplied as parameters.

Command Parameters:

ServiceRecordHandle: *Size: 4 Bytes*

Value	Parameter Description
32-bit handle	The ServiceRecordHandle parameter specifies the service record from which attribute values are to be retrieved. The handle is obtained via a previous SDP_ServiceSearch transaction.

MaximumAttributeByteCount: *Size: 2 Bytes*

Value	Parameter Description
N	MaximumAttributeByteCount specifies the maximum number of bytes of attribute data to be returned in the response to this request. The SDP server shall not return more than N bytes of attribute data in the response PDU. If the requested attributes require more than N bytes, the SDP server determines how to segment the list. In this case the client may request each successive segment by issuing a request containing the continuation state that was returned in the previous response PDU. Note that in the case where multiple response PDUs are needed to return the attribute data, MaximumAttributeByteCount specifies the maximum size of the portion of the attribute data contained in each response PDU. Range: 0x0007-0xFFFF

AttributeIDList: *Size: Varies*

Value	Parameter Description
Data Element Sequence	The AttributeIDList is a data element sequence where each element in the list is either an attribute ID or a range of attribute IDs. Each attribute ID is encoded as a 16-bit unsigned integer data element. Each attribute ID range is encoded as a 32-bit unsigned integer data element, where the high order 16 bits are interpreted as the beginning attribute ID of the range and the low order 16 bits are interpreted as the ending attribute ID of the range. The attribute IDs contained in the AttributeIDList shall be listed in ascending order without duplication of any attribute ID values. Note that all attributes can be requested by specifying a range of 0x0000-0xFFFF.

ContinuationState: *Size: 1 to 17 Bytes*

Value	Parameter Description
Continuation State	ContinuationState consists of an 8-bit count, N, of the number of bytes of continuation state information, followed by the N bytes of continuation state information that were returned in a previous response from the server. N shall be less than or equal to 16. If no continuation state is to be provided in the request, N shall be set to 0.

4.6.2 SDP_ServiceAttributeResponse PDU

PDU Type	PDU ID	Parameters
SDP_ServiceAttributeResponse	0x05	AttributeListByteCount, AttributeList, ContinuationState

Description:

The SDP server generates an SDP_ServiceAttributeResponse upon receipt of a valid SDP_ServiceAttributeRequest. The response contains a list of attributes (both attribute ID and attribute value) from the requested service record.

PDU Parameters:

AttributeListByteCount: *Size: 2 Bytes*

Value	Parameter Description
N	The AttributeListByteCount contains a count of the number of bytes in the AttributeList parameter. N shall never be larger than the MaximumAttributeByteCount value specified in the SDP_ServiceAttributeRequest. Range: 0x0002-0xFFFF

AttributeList: *Size: AttributeListByteCount*

Value	Parameter Description
Data Element Sequence	The AttributeList is a data element sequence containing attribute IDs and attribute values. The first element in the sequence contains the attribute ID of the first attribute to be returned. The second element in the sequence contains the corresponding attribute value. Successive pairs of elements in the list contain additional attribute ID and value pairs. Only attributes that have non-null values within the service record and whose attribute IDs were specified in the SDP_ServiceAttributeRequest are contained in the AttributeList. Neither an attribute ID nor an attribute value is placed in the AttributeList for attributes in the service record that have no value. The attributes are listed in ascending order of attribute ID value.

ContinuationState: *Size: 1 to 17 Bytes*

Value	Parameter Description
Continuation State	ContinuationState consists of an 8-bit count, N, of the number of bytes of continuation state information, followed by the N bytes of continuation information. If the current response is complete, this parameter consists of a single byte with the value 0. If a partial response is given, the ContinuationState parameter may be supplied in a subsequent request to retrieve the remainder of the response.

If a partial response is generated, the response may be arbitrarily segmented into multiple PDUs (subject to the constraint imposed by the allowed range of values for the AttributeListByteCount parameter). Attributes in partial responses are not required to be integral.

4.7 SERVICESEARCHATTRIBUTE TRANSACTION

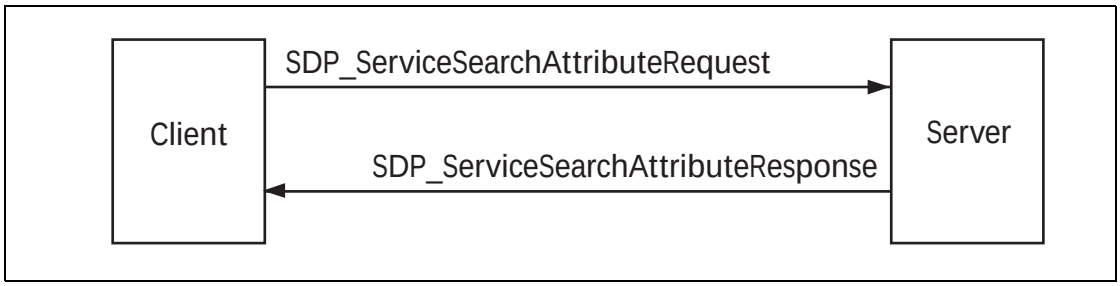

Figure 4.6: ServiceSearchAttribute Transaction

4.7.1 SDP_ServiceSearchAttributeRequest PDU

PDU Type	PDU ID	Parameters
SDP_ServiceSearchAttributeRequest	0x06	ServiceSearchPattern, MaximumAttributeByteCount, AttributeIDList, ContinuationState

Description:

The SDP_ServiceSearchAttributeRequest transaction combines the capabilities of the SDP_ServiceSearchRequest and the SDP_ServiceAttributeRequest into a single request. As parameters, it contains both a service search pattern and a list of attributes to be retrieved from service records that match the service search pattern. The SDP_ServiceSearchAttributeRequest and its response are more complex and can require more bytes than separate SDP_ServiceSearch and SDP_ServiceAttribute transactions. However, using SDP_ServiceSearchAttributeRequest can reduce the total number of SDP transactions, particularly when retrieving multiple service records.

Note that the service record handle for each service record is contained in the ServiceRecordHandle attribute of that service and may be requested along with other attributes.

PDU Parameters:

ServiceSearchPattern: *Size: Varies*

Value	Parameter Description
Data Element Sequence	The ServiceSearchPattern is a data element sequence where each element in the sequence is a UUID. The sequence must contain at least one UUID. The maximum number of UUIDs in the sequence is 12[1]. The list of UUIDs constitutes a service search pattern.

1. The value of 12 has been selected as a compromise between the scope of a service search and the size of a search request PDU. It is not expected that more than 12 UUIDs will be useful in a service search pattern.

MaximumAttributeByteCount: *Size: 2 Bytes*

Value	Parameter Description
N	MaximumAttributeByteCount specifies the maximum number of bytes of attribute data to be returned in the response to this request. The SDP server shall not return more than N bytes of attribute data in the response PDU. If the requested attributes require more than N bytes, the SDP server determines how to segment the list. In this case the client may request each successive segment by issuing a request containing the continuation state that was returned in the previous response PDU. Note that in the case where multiple response PDUs are needed to return the attribute data, MaximumAttributeByteCount specifies the maximum size of the portion of the attribute data contained in each response PDU. Range: 0x0007-0xFFFF

AttributeIDList: *Size: Varies*

Value	Parameter Description
Data Element Sequence	The AttributeIDList is a data element sequence where each element in the list is either an attribute ID or a range of attribute IDs. Each attribute ID is encoded as a 16-bit unsigned integer data element. Each attribute ID range is encoded as a 32-bit unsigned integer data element, where the high order 16 bits are interpreted as the beginning attribute ID of the range and the low order 16 bits are interpreted as the ending attribute ID of the range. The attribute IDs contained in the AttributeIDList shall be listed in ascending order without duplication of any attribute ID values. Note that all attributes may be requested by specifying a range of 0x0000-0xFFFF.

ContinuationState: *Size: 1 to 17 Bytes*

Value	Parameter Description
Continuation State	ContinuationState consists of an 8-bit count, N, of the number of bytes of continuation state information, followed by the N bytes of continuation state information that were returned in a previous response from the server. N shall be less than or equal to 16. If no continuation state is to be provided in the request, N shall set to 0.

4.7.2 SDP_ServiceSearchAttributeResponse PDU

PDU Type	PDU ID	Parameters
SDP_ServiceSearchAttributeResponse	0x07	AttributeListsByteCount, AttributeLists, ContinuationState

Description:

The SDP server generates an SDP_ServiceSearchAttributeResponse upon receipt of a valid SDP_ServiceSearchAttributeRequest. The response contains a list of attributes (both attribute ID and attribute value) from the service records that match the requested service search pattern.

PDU Parameters:

AttributeListsByteCount: *Size: 2 Bytes*

Value	Parameter Description
N	The AttributeListsByteCount contains a count of the number of bytes in the AttributeLists parameter. N shall never be larger than the MaximumAttributeByteCount value specified in the SDP_ServiceSearchAttributeRequest. Range: 0x0002-0xFFFF

AttributeLists: *Size: Varies*

Value	Parameter Description
Data Element Sequence	The AttributeLists is a data element sequence where each element in turn is a data element sequence representing an attribute list. Each attribute list contains attribute IDs and attribute values from one service record. The first element in each attribute list contains the attribute ID of the first attribute to be returned for that service record. The second element in each attribute list contains the corresponding attribute value. Successive pairs of elements in each attribute list contain additional attribute ID and value pairs. Only attributes that have non-null values within the service record and whose attribute IDs were specified in the SDP_ServiceSearchAttributeRequest are contained in the AttributeLists. Neither an attribute ID nor attribute value is placed in AttributeLists for attributes in the service record that have no value. Within each attribute list, the attributes are listed in ascending order of attribute ID value.

ContinuationState: *Size: 1 to 17 Bytes*

Value	Parameter Description
Continuation State	ContinuationState consists of an 8-bit count, N, of the number of bytes of continuation state information, followed by the N bytes of continuation information. If the current response is complete, this parameter consists of a single byte with the value 0. If a partial response is given, the ContinuationState parameter may be supplied in a subsequent request to retrieve the remainder of the response.

If a partial response is generated, the response may be arbitrarily segmented into multiple PDUs (subject to the constraint imposed by the allowed range of values for the AttributeListByteCount parameter). Attributes in partial responses are not required to be integral.

5 SERVICE ATTRIBUTE DEFINITIONS

The service classes and attributes contained in this document are necessarily a partial list of the service classes and attributes supported by SDP. Only service classes that directly support the SDP server are included in this document. Additional service classes will be defined in other documents and possibly in future revisions of this document. Also, it is expected that additional attributes will be discovered that are applicable to a broad set of services; these may be added to the list of Universal attributes in future revisions of this document.

5.1 UNIVERSAL ATTRIBUTE DEFINITIONS

Universal attributes are those service attributes whose definitions are common to all service records. Note that this does not mean that every service record contains values for all of these service attributes. However, if a service record has a service attribute with an attribute ID allocated to a universal attribute, the attribute value shall conform to the universal attribute's definition.

Only two attributes are required to exist in every service record instance. They are the ServiceRecordHandle (attribute ID 0x0000) and the ServiceClassIDList (attribute ID 0x0001). All other service attributes are optional within a service record.

5.1.1 ServiceRecordHandle Attribute

Attribute Name	Attribute ID	Attribute Value Type
ServiceRecordHandle	0x0000	32-bit unsigned integer

Description:

A service record handle is a 32-bit number that uniquely identifies each service record within an SDP server. It is important to note that, in general, each handle is unique only within each SDP server. If SDP server S1 and SDP server S2 both contain identical service records (representing the same service), the service record handles used to reference these identical service records are completely independent. The handle used to reference the service on S1 will, in general, be meaningless if presented to S2. Service record handle values 0x00000001-0x0000FFFF are reserved.

5.1.2 ServiceClassIDList Attribute

Attribute Name	Attribute ID	Attribute Value Type
ServiceClassIDList	0x0001	Data Element Sequence

Description:

The ServiceClassIDList attribute consists of a data element sequence in which each data element is a UUID representing the service classes that a given service record conforms to. The UUIDs shall be listed in order from the most specific class to the most general class unless overridden by a profile specification. The ServiceClassIDList shall contain at least one service class UUID.

5.1.3 ServiceRecordState Attribute

Attribute Name	Attribute ID	Attribute Value Type
ServiceRecordState	0x0002	32-bit unsigned integer

Description:

The ServiceRecordState is a 32-bit integer that is used to facilitate caching of ServiceAttributes. If this attribute is contained in a service record, its value shall bechanged when any other attribute value is added to, deleted from or changed within the service record. This permits a client to check the value of this single attribute. If its value has not changed since it was last checked, the client knows that no other attribute values within the service record have changed.

5.1.4 ServiceID Attribute

Attribute Name	Attribute ID	Attribute Value Type
ServiceID	0x0003	UUID

Description:

The ServiceID is a UUID that universally and uniquely identifies the service instance described by the service record. This service attribute is particularly useful if the same service is described by service records in more than one SDP server.

5.1.5 ProtocolDescriptorList Attribute

Attribute Name	Attribute ID	Attribute Value Type
ProtocolDescriptorList	0x0004	Data Element Sequence or Data Element Alternative

Description:

The ProtocolDescriptorList attribute describes one or more protocol stacks that can be used to gain access to the service described by the service record.

If the ProtocolDescriptorList describes a single stack, it takes the form of a data element sequence in which each element of the sequence is a protocol descriptor. Each protocol descriptor is, in turn, a data element sequence whose first element is a UUID identifying the protocol and whose successive elements are protocol-specific parameters. Potential protocol-specific parameters are a protocol version number and a connection-port number. The protocol descriptors are listed in order from the lowest layer protocol to the highest layer protocol used to gain access to the service.

If it is possible for more than one kind of protocol stack to be used to gain access to the service, the ProtocolDescriptorList takes the form of a data element alternative where each member is a data element sequence as described in the previous paragraph.

Protocol Descriptors

A protocol descriptor identifies a communications protocol and provides protocol-specific parameters. A protocol descriptor is represented as a data element sequence. The first data element in the sequence shall be the UUID that identifies the protocol. Additional data elements optionally provide protocol-specific information, such as the L2CAP protocol/service multiplexer (PSM) and the RFCOMM server channel number (CN) shown below.

ProtocolDescriptorList Examples

These examples are intended to be illustrative. The parameter formats for each protocol are not defined within this specification.

In the first two examples, it is assumed that a single RFCOMM instance exists on top of the L2CAP layer. In this case, the L2CAP protocol specific information (PSM) points to the single instance of RFCOMM. In the last example, two different and independent RFCOMM instances are available on top of the L2CAP layer. In this case, the L2CAP protocol specific information (PSM) points to a distinct identifier that distinguishes each of the RFCOMM instances. See the L2CAP specification ([Vol. 3] Part A, Section 4.2) for the range of allowed PSM values.

IrDA-like printer

((L2CAP, PSM=RFCOMM), (RFCOMM, CN=1), (PostscriptStream))

IP Network Printing

((L2CAP, PSM=RFCOMM), (RFCOMM, CN=2), (PPP), (IP), (TCP), (IPP))

Synchronization Protocol Descriptor Example

((L2CAP, PSM=0x1001), (RFCOMM, CN=1), (Obex), (vCal))

((L2CAP, PSM=0x1003), (RFCOMM, CN=1), (Obex), (otherSynchronisationApplication))

5.1.6 AdditionalProtocolDescriptorList Attribute

Attribute Name	Attribute ID	Attribute Value Type
AdditionalProtocolDescriptorList	0x000D	Data Element Sequence

Description:

The AdditionalProtocolDescriptorLists attribute contains a sequence of ProtocolDescriptorList-elements. Each element having the same format as the ProtocolDescriptorList described in section 5.1.5. The ordering of the elements is significant and should be specified and fixed in Profiles that make use of this attribute.

The AdditionalProtocolDescriptorLists attribute supports services that require more channels in addition to the service described in Section 5.1.5 . If the AdditionalProtocolDescriptorLists attribute is included in a service record, the ProtocolDescriptorList attribute must be included.

AdditionalProtocolDescriptorList Examples

The following is just an illustrative example and is not meant to refer a real specified service or protocols.

```
Attribute    Attribute Value type            Attribute Value

ProtocolDescriptorList

   ProtocolDescriptor #0DataElementSequence

         ProtocolID    UUID       L2CAP

         Param: PSM    PSM        FooDataProtocol

   ProtocolDescriptor #1DataElementSequence

          ProtocolID           UUID       FooDataProtocol

AdditionalProtocolDescriptorLists
```

```
ProtocolDescriptorList #0  DataElementSequence

ProtocolDescriptor #0      DataElementSequence

           ProtocolID      UUID       L2CAP

           Param: PSM      PSM        FooControlProtocol

      ProtocolDescriptor #1DataElementSequence

           ProtocolID      UUID       FooControlProtocol
```

5.1.7 BrowseGroupList Attribute

Attribute Name	Attribute ID	Attribute Value Type
BrowseGroupList	0x0005	Data Element Sequence

Description:

The BrowseGroupList attribute consists of a data element sequence in which each element is a UUID that represents a browse group to which the service record belongs. The top-level browse group ID, called PublicBrowseRoot and representing the root of the browsing hierarchy, has the value 00001002-0000-1000-8000-00805F9B34FB (UUID16: 0x1002) from the Bluetooth Assigned Numbers document.

5.1.8 LanguageBaseAttributeIDList Attribute

Attribute Name	Attribute ID	Attribute Value Type
LanguageBaseAttributeIDList	0x0006	Data Element Sequence

Description:

In order to support human-readable attributes for multiple natural languages in a single service record, a base attribute ID is assigned for each of the natural languages used in a service record. The human-readable universal attributes are then defined with an attribute ID offset from each of these base values, rather than with an absolute attribute ID.

The LanguageBaseAttributeIDList attribute is a list in which each member contains a language identifier, a character encoding identifier, and a base attribute ID for each of the natural languages used in the service record. The LanguageBaseAttributeIDList attribute consists of a data element sequence in which each element is a 16-bit unsigned integer. The elements are grouped as triplets (threes).

The first element of each triplet contains an identifier representing the natural language. The language is encoded according to ISO 639:1988 (E/F): “Code for the representation of names of languages”.

The second element of each triplet contains an identifier that specifies a character encoding used for the language. Values for character encoding can be found in IANA's database[1], and have the values that are referred to as MIBEnum values. The recommended character encoding is UTF-8.

The third element of each triplet contains an attribute ID that serves as the base attribute ID for the natural language in the service record. Different service records within a server may use different base attribute ID values for the same language.

To facilitate the retrieval of human-readable universal attributes in a principal language, the base attribute ID value for the primary language supported by a service record shall be 0x0100. Also, if a LanguageBaseAttributeIDList attribute is contained in a service record, the base attribute ID value contained in its first element shall be 0x0100. If one or more human readable attributes are contained in a service record, the LanguageBaseAttributeIDList attribute should be included in that service record.

5.1.9 ServiceInfoTimeToLive Attribute

Attribute Name	Attribute ID	Attribute Value Type
ServiceInfoTimeToLive	0x0007	32-bit unsigned integer

Description:

The ServiceTimeToLive attribute is a 32-bit integer that contains the number of seconds for which the information in a service record is expected to remain valid and unchanged. This time interval is measured from the time that the attribute value is retrieved from the SDP server. This value does not imply a guarantee that the service record will remain available or unchanged. It is simply a hint that a client can use to determine a suitable polling interval to re-validate the service record contents.

1. See http://www.isi.edu/in-notes/iana/assignments/character-sets

5.1.10 ServiceAvailability Attribute

Attribute Name	Attribute ID	Attribute Value Type
ServiceAvailability	0x0008	8-bit unsigned integer

Description:

The ServiceAvailability attribute is an 8-bit unsigned integer that represents the relative ability of the service to accept additional clients. A value of 0xFF indicates that the service is not currently in use and is thus fully available, while a value of 0x00 means that the service is not accepting new clients. For services that support multiple simultaneous clients, intermediate values indicate the relative availability of the service on a linear scale.

For example, a service that can accept up to 3 clients should provide ServiceAvailability values of 0xFF, 0xAA, 0x55, and 0x00 when 0, 1, 2, and 3 clients, respectively, are utilizing the service. The value 0xAA is approximately (2/3) * 0xFF and represents 2/3 availability, while the value 0x55 is approximately (1/3)*0xFF and represents 1/3 availability. Note that the availability value is be approximated as

(1 - (current_number_of_clients / maximum_number_of_clients)) * 0xFF

When the maximum number of clients is large, this formula must be modified to ensure that ServiceAvailability values of 0x00 and 0xFF are reserved for their defined meanings of unavailability and full availability, respectively.

Note that the maximum number of clients a service can support may vary according to the resources utilized by the service's current clients.

A non-zero value for ServiceAvailability does not guarantee that the service will be available for use. It should be treated as a hint or an approximation of availability status.

5.1.11 BluetoothProfileDescriptorList Attribute

Attribute Name	Attribute ID	Attribute Value Type
BluetoothProfileDescriptorList	0x0009	Data Element Sequence

Description:

The BluetoothProfileDescriptorList attribute consists of a data element sequence in which each element is a profile descriptor that contains information about a Bluetooth profile to which the service represented by this service record conforms. Each profile descriptor is a data element sequence whose first element is the UUID assigned to the profile and whose second element is a 16-bit profile version number.

Each version of a profile is assigned a 16-bit unsigned integer profile version number, which consists of two 8-bit fields. The higher-order 8 bits contain the

major version number field and the lower-order 8 bits contain the minor version number field. The initial version of each profile has a major version of 1 and a minor version of 0. When upward compatible changes are made to the profile, the minor version number will be incremented. If incompatible changes are made to the profile, the major version number will be incremented.

5.1.12 DocumentationURL Attribute

Attribute Name	Attribute ID	Attribute Value Type
DocumentationURL	0x000A	URL

Description:

This attribute is a URL which points to documentation on the service described by a service record.

5.1.13 ClientExecutableURL Attribute

Attribute Name	Attribute ID	Attribute Value Type
ClientExecutableURL	0x000B	URL

Description:

This attribute contains a URL that refers to the location of an application that can be used to utilize the service described by the service record. Since different operating environments require different executable formats, a mechanism has been defined to allow this single attribute to be used to locate an executable that is appropriate for the client device's operating environment. In the attribute value URL, the first byte with the value 0x2A (ASCII character '*') is to be replaced by the client application with a string representing the desired operating environment before the URL is to be used.

The list of standardized strings representing operating environments is contained in the Bluetooth Assigned Numbers document.

For example, assume that the value of the ClientExecutableURL attribute is http://my.fake/public/*/client.exe. On a device capable of executing SH3 WindowsCE files, this URL would be changed to http://my.fake/public/sh3-microsoft-wince/client.exe. On a device capable of executing Windows 98 binaries, this URL would be changed to http://my.fake/public/i86-microsoft-win98/client.exe.

5.1.14 IconURL Attribute

Attribute Name	Attribute ID	Attribute Value Type

IconURL	0x000C	URL

Description:

This attribute contains a URL that refers to the location of an icon that can be used to represent the service described by the service record. Since different hardware devices require different icon formats, a mechanism has been defined to allow this single attribute to be used to locate an icon that is appropriate for the client device. In the attribute value URL, the first byte with the value 0x2A (ASCII character '*') is to be replaced by the client application with a string representing the desired icon format before the URL is to be used.

The list of standardized strings representing icon formats is contained in the Bluetooth Assigned Numbers document.

For example, assume that the value of the IconURL attribute is http://my.fake/public/icons/*. On a device that prefers 24 x 24 icons with 256 colors, this URL would be changed to http://my.fake/public/icons/24x24x8.png. On a device that prefers 10 x 10 monochrome icons, this URL would be changed to http://my.fake/public/icons/10x10x1.png.

5.1.15 ServiceName Attribute

Attribute Name	Attribute ID Offset	Attribute Value Type
ServiceName	0x0000	String

Description:

The ServiceName attribute is a string containing the name of the service represented by a service record. It should be brief and suitable for display with an Icon representing the service. The offset 0x0000 is added to the attribute ID base (contained in the LanguageBaseAttributeIDList attribute) in order to compute the attribute ID for this attribute.

5.1.16 ServiceDescription Attribute

Attribute Name	Attribute ID Offset	Attribute Value Type
ServiceDescription	0x0001	String

Description:

This attribute is a string containing a brief description of the service. It should be less than 200 characters in length. The offset 0x0001 is added to the attribute ID base (contained in the LanguageBaseAttributeIDList attribute) in order to compute the attribute ID for this attribute.

5.1.17 ProviderName Attribute

Attribute Name	Attribute ID Offset	Attribute Value Type
ProviderName	0x0002	String

Description:

This attribute is a string containing the name of the person or organization providing the service. The offset 0x0002 is added to the attribute ID base (contained in the LanguageBaseAttributeIDList attribute) in order to compute the attribute ID for this attribute.

5.1.18 Reserved Universal Attribute IDs

Attribute IDs in the range of 0x000E – 0x01FF are reserved for use by SDP, if allocated the assigned numbers document will be updated.

5.2 SERVICEDISCOVERYSERVER SERVICE CLASS ATTRIBUTE DEFINITIONS

This service class describes service record that contains attributes of service discovery server itself. The attributes listed in this section are only valid if the ServiceClassIDList attribute contains the ServiceDiscoveryServerServiceClassID. All of the universal attributes may be included in service records of the ServiceDiscoveryServer class.

5.2.1 ServiceRecordHandle Attribute

Described in the universal attribute definition for ServiceRecordHandle.

Value

A 32-bit integer with the value 0x000000000.

5.2.2 ServiceClassIDList Attribute

Described in the universal attribute definition for ServiceClassIDList.

Value

A UUID representing the ServiceDiscoveryServerServiceClassID.

5.2.3 VersionNumberList Attribute

Attribute Name	Attribute ID	Attribute Value Type
VersionNumberList	0x0200	Data Element Sequence

Description:

The VersionNumberList is a data element sequence in which each element of the sequence is a version number supported by the SDP server.

A version number is a 16-bit unsigned integer consisting of two fields. The higher-order 8 bits contain the major version number field and the low-order 8 bits contain the minor version number field. The initial version of SDP has a major version of 1 and a minor version of 0. When upward compatible changes are made to the protocol, the minor version number will be incremented. If incompatible changes are made to SDP, the major version number will be incremented. This guarantees that if a client and a server support a common major version number, they can communicate if each uses only features of the specification with a minor version number that is supported by both client and server.

5.2.4 ServiceDatabaseState Attribute

Attribute Name	Attribute ID	Attribute Value Type
ServiceDatabaseState	0x0201	32-bit unsigned integer

Description:

The ServiceDatabaseState is a 32-bit integer that is used to facilitate caching of service records. If this attribute exists, its value shall be changed when any of the other service records are added to or deleted from the server's database. If this value has not changed since the last time a client queried its value, the client knows that a) none of the other service records maintained by the SDP server have been added or deleted; and b) any service record handles acquired from the server are still valid. A client shall query this attribute's value

when a connection to the server is established, prior to using any service record handles acquired during a previous connection.

Note that the ServiceDatabaseState attribute does not change when existing service records are modified, including the addition, removal, or modification of service attributes. A service record's ServiceRecordState attribute indicates when that service record is modified.

5.2.5 Reserved Attribute IDs

Attribute IDs in the range of 0x0202-0x02FF are reserved.

5.3 BROWSEGROUPDESCRIPTOR SERVICE CLASS ATTRIBUTE DEFINITIONS

This service class describes the ServiceRecord provided for each BrowseGroupDescriptor service offered on a Bluetooth device. The attributes listed in this section are only valid if the ServiceClassIDList attribute contains the BrowseGroupDescriptorServiceClassID. Note that all of the universal attributes may be included in service records of the BrowseGroupDescriptor class.

5.3.1 ServiceClassIDList Attribute

Described in the universal attribute definition for ServiceClassIDList.

Value

A UUID representing the BrowseGroupDescriptorServiceClassID.

5.3.2 GroupID Attribute

Attribute Name	Attribute ID	Attribute Value Type
GroupID	0x0200	UUID

Description:

This attribute contains a UUID that can be used to locate services that are members of the browse group that this service record describes.

5.3.3 Reserved Attribute IDs

Attribute IDs in the range of 0x0201-0x02FF are reserved.

6 SECURITY

In Security Mode 4, SDP should use no security but may use security (an authenticated or unauthenticated link key with encryption). See [Part C] Section 5.2.2 on page 285).

APPENDIX A – BACKGROUND INFORMATION

A.1. Service Discovery

As computing continues to move to a network-centric model, finding and making use of services that may be available in the network becomes increasingly important. Services can include common ones such as printing, paging, FAXing, and so on, as well as various kinds of information access such as teleconferencing, network bridges and access points, eCommerce facilities, and so on — most any kind of service that a server or service provider might offer. In addition to the need for a standard way of discovering available services, there are other considerations: getting access to the services (finding and obtaining the protocols, access methods, “drivers” and other code necessary to utilize the service), controlling access to the services, advertising the services, choosing among competing services, billing for services, and so on. This problem is widely recognized; many companies, standards bodies and consortia are addressing it at various levels in various ways. Service Location Protocol (SLP), Jini™, and Salutation™, to name just a few, all address some aspect of service discovery.

A.2. Bluetooth Service Discovery

Bluetooth Service Discovery Protocol (SDP) addresses service discovery specifically for the Bluetooth environment. It is optimized for the highly dynamic nature of Bluetooth communications. SDP focuses primarily on discovering services available from or through Bluetooth devices. SDP does not define methods for accessing services; once services are discovered with SDP, they can be accessed in various ways, depending upon the service. This might include the use of other service discovery and access mechanisms such as those mentioned above; SDP provides a means for other protocols to be used along with SDP in those environments where this can be beneficial. While SDP can coexist with other service discovery protocols, it does not require them. In Bluetooth environments, services can be discovered using SDP and can be accessed using other protocols defined by Bluetooth.

APPENDIX B – EXAMPLE SDP TRANSACTIONS

The following are simple examples of typical SDP transactions. These are meant to be illustrative of SDP flows. The examples do not consider:

- Caching (in a caching system, the SDP client would make use of the ServiceRecordState and ServiceDatabaseState attributes);
- Service availability (if this is of interest, the SDP client should use the ServiceAvailability and/or ServiceTimeToLive attributes);
- SDP versions (the VersionNumberList attribute could be used to determine compatible SDP versions);
- SDP Error Responses (an SDP error response is possible for any SDP request that is in error); and
- Communication connection (the examples assume that an L2CAP connection is established).

The examples are meant to be illustrative of the protocol. The format used is `ObjectName[ObjectSizeInBytes] {SubObjectDefinitions},` but this is not meant to illustrate an interface. The `ObjectSizeInBytes` is the size of the object in decimal. The `SubObjectDefinitions` (inside of `{}` characters) are components of the immediately enclosing object. Hexadecimal values shown as lower-case letters, such as for transaction IDs and service handles, are variables (the particular value is not important for the illustration, but each such symbol always represents the same value). Comments are included in this manner: `/* comment text */`.

Numeric values preceded by “0x” are hexadecimal, while those preceded by “0b” are binary. All other numeric values are decimal.

B.1. SDP Example 1 – ServiceSearchRequest

The first example is that of an SDP client searching for a generic printing service. The client does not specify a particular type of printing service. In the example, the SDP server has two available printing services. The transaction illustrates:

1. SDP client to SDP server: SDP_ServiceSearchRequest, specifying the PrinterServiceClassID (represented as a DataElement with a 32-bit UUID value of `ppp...ppp`) as the only element of the ServiceSearchPattern. The PrinterServiceClassID is assumed to be a 32-bit UUID and the data element type for it is illustrated. The TransactionID is illustrated as `tttt`.
2. SDP server to SDP client: SDP_ServiceSearchResponse, returning handles to two printing services, represented as `qqqqqqqq` for the first printing service and `rrrrrrrr` for the second printing service. The Transaction ID is the same value as supplied by the SDP client in the corresponding request (`tttt`).

```
/* Sent from SDP Client to SDP server */
SDP_ServiceSearchRequest[15] {
  PDUID[1] {
    0x02
  }
  TransactionID[2] {
    0xtttt
  }
  ParameterLength[2] {
    0x000A
  }
  ServiceSearchPattern[7] {
    DataElementSequence[7] {
      0b00110 0b101 0x05
      UUID[5] {
        /* PrinterServiceClassID */
        0b00011 0b010 0xpppppppp
      }
    }
  }
  MaximumServiceRecordCount[2] {
    0x0003
  }
  ContinuationState[1] {
    /* no continuation state */
    0x00
  }
}


/* Sent from SDP server to SDP client */
SDP_ServiceSearchResponse[18] {
  PDUID[1] {
    0x03
  }
  TransactionID[2] {
    0xtttt
  }
  ParameterLength[2] {
    0x000D
  }
  TotalServiceRecordCount[2] {
    0x0002
  }
  CurrentServiceRecordCount[2] {
    0x0002
  }
  ServiceRecordHandleList[8] {
    /* print service 1 handle */
    0xqqqqqqqq
    /* print service 2 handle */
    0xrrrrrrrr
  }
  ContinuationState[1] {
    /* no continuation state */
```

```
    0x00
  }
}
```

B.2. SDP Example 2 – ServiceAttributeTransaction

The second example continues the first example. In Example 1, the SDP client obtained handles to two printing services. In Example 2, the client uses one of those service handles to obtain the ProtocolDescriptorList attribute for that printing service. The transaction illustrates:

1. SDP client to SDP server: SDP_ServiceAttributeRequest, presenting the previously obtained service handle (the one denoted as qqqqqqqq) and specifying the ProtocolDescriptorList attribute ID (AttributeID 0x0004) as the only attribute requested (other attributes could be retrieved in the same transaction if desired). The TransactionID is illustrated as uuuu to distinguish it from the TransactionID of Example 1.
2. SDP server to SDP client: SDP_ServiceAttributeResponse, returning the ProtocolDescriptorList for the specified printing service. This protocol stack is assumed to be ((L2CAP), (RFCOMM, 2), (PostscriptStream)). The ProtocolDescriptorList is a data element sequence in which each element is, in turn, a data element sequence whose first element is a UUID representing the protocol, and whose subsequent elements are protocol-specific parameters. In this example, one such parameter is included for the RFCOMM protocol, an 8-bit value indicating RFCOMM server channel 2. The Transaction ID is the same value as supplied by the SDP client in the corresponding request (uuuu). The Attributes returned are illustrated as a data element sequence where the protocol descriptors are 32-bit UUIDs and the RFCOMM server channel is a data element with an 8-bit value of 2.

```
 /* Sent from SDP Client to SDP server */
SDP_ServiceAttributeRequest[17] {
  PDUID[1] {
    0x04
  }
  TransactionID[2] {
    0xuuuu
  }
  ParameterLength[2] {
    0x000C
  }
  ServiceRecordHandle[4] {
    0xqqqqqqqq
  }
  MaximumAttributeByteCount[2] {
    0x0080
  }
  AttributeIDList[5] {
    DataElementSequence[5] {
```

```
      0b00110 0b101 0x03
      AttributeID[3] {
        0b00001 0b001 0x0004
      }
    }
  }
  ContinuationState[1] {
    /* no continuation state */
    0x00
  }
}

/* Sent from SDP server to SDP client */
SDP_ServiceAttributeResponse[38] {
  PDUID[1] {
    0x05
  }
  TransactionID[2] {
    0xuuuu
  }
  ParameterLength[2] {
    0x0021
  }
  AttributeListByteCount[2] {
    0x001E
  }
  AttributeList[30] {
    DataElementSequence[30] {
      0b00110 0b101 0x1C
      Attribute[28] {
        AttributeID[3] {
          0b00001 0b001 0x0004
        }
        AttributeValue[25] {
          /* ProtocolDescriptorList */
          DataElementSequence[25] {
            0b00110 0b101 0x17
            /* L2CAP protocol descriptor */
            DataElementSequence[7] {
              0b00110 0b101 0x05
              UUID[5] {
                /* L2CAP Protocol UUID */
                0b00011 0b010 <32-bit L2CAP UUID>
              }
            }
            /* RFCOMM protocol descriptor */
            DataElementSequence[9] {
              0b00110 0b101 0x07
              UUID[5] {
                /* RFCOMM Protocol UUID */
                0b00011 0b010 <32-bit RFCOMM UUID>
              }
              /* parameter for server 2 */
              Uint8[2] {
                0b00001 0b000 0x02
              }
            }
```

```
            /* PostscriptStream protocol descriptor */
            DataElementSequence[7] {
              0b00110 0b101 0x05
              UUID[5] {
                /* PostscriptStream Protocol UUID */
                0b00011 0b010 <32-bit PostscriptStream UUID>
              }
            }
          }
        }
      }
    }
  }
  ContinuationState[1] {
    /* no continuation state */
    0x00
  }
}
```

B.3. SDP Example 3 – ServiceSearchAttributeTransaction

The third example is a form of service browsing, although it is not generic browsing in that it does not make use of SDP browse groups. Instead, an SDP client is searching for available Synchronization services that can be presented to the user for selection. The SDP client does not specify a particular type of synchronization service. In the example, the SDP server has three available synchronization services: an address book synchronization service and a calendar synchronization service (both from the same provider), and a second calendar synchronization service from a different provider. The SDP client is retrieving the same attributes for each of these services; namely, the data formats supported for the synchronization service (vCard, vCal, ICal, etc.) and those attributes that are relevant for presenting information to the user about the services. Also assume that the maximum size of a response is 400 bytes. Since the result is larger than this, the SDP client will repeat the request supplying a continuation state parameter to retrieve the remainder of the response. The transaction illustrates:

1. SDP client to SDP server: SDP_ServiceSearchAttributeRequest, specifying the generic SynchronisationServiceClassID (represented as a data element whose 32-bit UUID value is `sss...sss`) as the only element of the ServiceSearchPattern. The SynchronisationServiceClassID is assumed to be a 32-bit UUID. The requested attributes are the ServiceRecordHandle (attribute ID 0x0000), ServiceClassIDList (attribute ID 0x0001), IconURL (attribute ID 0x000C), ServiceName (attribute ID 0x0100), ServiceDescription (attribute ID 0x0101), and ProviderName (attributeID 0x0102) attributes; as well as the service-specific SupportedDataStores (AttributeID 0x0301). Since the first two attribute IDs (0x0000 and 0x0001) and three other attribute IDs(0x0100, 0x0101, and 0x0102 are consecutive, they are specified as attribute ranges. The TransactionID is illustrated as `vvvv` to distinguish it from the TransactionIDs of the other Examples.

Note that values in the service record's primary language are requested for the text attributes (ServiceName, ServiceDescription and ProviderName) so that absolute attribute IDs may be used, rather than adding offsets to a base obtained from the LanguageBaseAttributeIDList attribute.

2. SDP server to SDP client: SDP_ServiceSearchAttributeResponse, returning the specified attributes for each of the three synchronization services. In the example, each ServiceClassIDList is assumed to contain a single element, the generic SynchronisationServiceClassID (a 32-bit UUID represented as sss...sss). Each of the other attributes contain illustrative data in the example (the strings have illustrative text; the icon URLs are illustrative, for each of the respective three synchronization services; and the SupportedDataStore attribute is represented as an unsigned 8-bit integer where 0x01 = vCard2.1, 0x02 = vCard3.0, 0x03 = vCal1.0 and 0x04 = iCal). Note that one of the service records (the third for which data is returned) has no ServiceDescription attribute. The attributes are returned as a data element sequence, where each element is in turn a data element sequence representing a list of attributes. Within each attribute list, the ServiceClassIDList is a data element sequence while the remaining attributes are single data elements. The Transaction ID is the same value as supplied by the SDP client in the corresponding request (0xvvvv). Since the entire result cannot be returned in a single response, a non-null continuation state is returned in this first response.
3. Note that the total length of the initial data element sequence (487 in the example) is indicated in the first response, even though only a portion of this data element sequence (368 bytes in the example, as indicated in the AttributeLists byte count) is returned in the first response. The remainder of this data element sequence is returned in the second response (without an additional data element header).
4. SDP client to SDP server: SDP_ServiceSearchAttributeRequest, with the same parameters as in step 1, except that the continuation state received from the server in step 2 is included as a request parameter. The TransactionID is changed to 0xwww to distinguish it from previous request.
5. SDP server to SDP client: SDP_ServiceSearchAttributeResponse, with the remainder of the result computed in step 2 above. Since all of the remaining result fits in this second response, a null continuation state is included.

```
/* Part 1 -- Sent from SDP Client to SDP server */
SdpSDP_ServiceSearchAttributeRequest[33] {
  PDUID[1] {
    0x06
  }
  TransactionID[2] {
    0xvvvv
  }
  ParameterLength[2] {
    0x001C
  }
  ServiceSearchPattern[7] {
    DataElementSequence[7] {
```

```
      0b00110 0b101 0x05
      UUID[5] {
        /* SynchronisationServiceClassID */
        0b00011 0b010 0xssssssss
      }
    }
  }
  MaximumAttributeByteCount[2] {
    0x0190
  }
AttributeIDList[18] {
    DataElementSequence[18] {
      0b00110 0b101 0x10
      AttributeIDRange[5] {
        0b00001 0b010 0x00000001
      }
      AttributeID[3] {
        0b00001 0b001 0x000C
      }
      AttributeIDRange[5] {
        0b00001 0b010 0x01000102
      }
      AttributeID[3] {
        0b00001 0b001 0x0301
      }    }
  }
  ContinuationState[1] {
    /* no continuation state */
    0x00
  }
}

/* Part 2 -- Sent from SDP server to SDP client */
SdpSDP_ServiceSearchAttributeResponse[384] {
  PDUID[1] {
    0x07
  }
  TransactionID[2] {
    0xvvvv
  }
  ParameterLength[2] {
    0x017B
  }
  AttributeListByteCount[2] {
    0x0170
  }
  AttributeLists[368] {
    DataElementSequence[487] {
      0b00110 0b110 0x01E4
      DataElementSequence[178] {
        0b00110 0b101 0xB0
        Attribute[8] {
          AttributeID[3] {
            0b00001 0b001 0x0000
          }
          AttributeValue[5] {
            /* service record handle */
```

```
            0b00001 0b010 0xhhhhhhhh
          }
        }
        Attribute[10] {
          AttributeID[3] {
            0b00001 0b001 0x0001
          }
AttributeValue[7] {
            DataElementSequence[7] {
              0b00110 0b101 0x05
              UUID[5] {
                /* SynchronisationServiceClassID */
                0b00011 0b010 0xssssssss
              }
            }
          }
        }
        Attribute[35] {
          AttributeID[3] {
            0b00001 0b001 0x000C
          }
          AttributeValue[32] {
            /* IconURL; '*' replaced by client application */
            0b01000 0b101 0x1E
            "http://Synchronisation/icons/*"
          }
        }
        Attribute[22] {
          AttributeID[3] {
            0b00001 0b001 0x0100
          }
          AttributeValue[19] {
            /* service name */
            0b00100 0b101 0x11
            "Address Book Sync"
          }
        }
        Attribute[59] {
          AttributeID[3] {
            0b00001 0b001 0x0101
          }
          AttributeValue[56] {
            /* service description */
            0b00100 0b101 0x36
            "Synchronisation Service for"
            " vCard Address Book Entries"
          }
        }
        Attribute[37] {
          AttributeID[3] {
            0b00001 0b001 0x0102
          }
          AttributeValue[34] {
            /* service provider */
            0b00100 0b101 0x20
            "Synchronisation Specialists Inc."
          }
```

```
    }
    Attribute[5] {
      AttributeID[3] {
        0b00001 0b001 0x0301
      }
      AttributeValue[2] {
        /* Supported Data Store 'phonebook' */
        0b00001 0b000 0x01
      }
    }
  }
  DataElementSequence[175] {
    0b00110 0b101 0xAD
    Attribute[8] {
      AttributeID[3] {
        0b00001 0b001 0x0000
      }
      AttributeValue[5] {
        /* service record handle */
        0b00001 0b010 0xmmmmmmmm
      }
    }
    Attribute[10] {
      AttributeID[3] {
        0b00001 0b001 0x0001
      }
               AttributeValue[7] {
      DataElementSequence[7] {
        0b00110 0b101 0x05
        UUID[5] {
          /* SynchronisationServiceClassID */
          0b00011 0b010 0xssssssss
        }
      }
    }
    Attribute[35] {
      AttributeID[3] {
        0b00001 0b001 0x000C
      }
      AttributeValue[32] {
        /* IconURL; '*' replaced by client application */
        0b01000 0b101 0x1E
        "http://Synchronisation/icons/*"
      }
    }
    Attribute[21] {
      AttributeID[3] {
        0b00001 0b001 0x0100
      }
      AttributeValue[18] {
        /* service name */
        0b00100 0b101 0x10
        "Appointment Sync"
      }
    }
    Attribute[57] {
```

```
          AttributeID[3] {
            0b00001 0b001 0x0101
          }
          AttributeValue[54] {
            /* service description */
            0b00100 0b101 0x34
            "Synchronisation Service for"
            " vCal Appointment Entries"
          }
        }
        Attribute[37] {
          AttributeID[3] {
            0b00001 0b001 0x0102
          }
          AttributeValue[34] {
            /* service provider */
            0b00100 0b101 0x20
            "Synchronisation Specialists Inc."
          }
        }
        Attribute[5] {
          AttributeID[3] {
            0b00001 0b001 0x0301
          }
          AttributeValue[2] {
            /* Supported Data Store 'calendar' */
            0b00001 0b000 0x03
          }
        }
      }
    /* } Data element sequence of attribute lists */
    /* is not completed in this PDU. */
  }
  ContinuationState[9] {
    /* 8 bytes of continuation state */
    0x08 0xzzzzzzzzzzzzzzzz
  }
}

/* Part 3 -- Sent from SDP Client to SDP server */
SdpSDP_ServiceSearchAttributeRequest[41] {
  PDUID[1] {
    0x06
  }
  TransactionID[2] {
    0xwwww
  }
  ParameterLength[2] {
    0x0024
  }
  ServiceSearchPattern[7] {
    DataElementSequence[7] {
      0b00110 0b101 0x05
      UUID[5] {
        /* SynchronisationServiceClassID */
        0b00011 0b010 0xssssssss
      }
```

```
    }
  }
  MaximumAttributeByteCount[2] {
    0x0180
  }
    AttributeIDList[18] {
    DataElementSequence[18] {
      0b00110 0b101 0x10
      AttributeIDRange[5] {
        0b00001 0b010 0x00000001
      }
      AttributeID[3] {
        0b00001 0b001 0x000C
      }
      AttributeIDRange[5] {
        0b00001 0b010 0x01000102
      }
      AttributeID[3] {
        0b00001 0b001 0x0301
      }
    }
  }
  ContinuationState[9] {
    /* same 8 bytes of continuation state */
    /* received in part 2 */
    0x08 0xzzzzzzzzzzzzzzzz
  }
}

Part 4 -- Sent from SDP server to SDP client

SdpSDP_ServiceSearchAttributeResponse[115] {
  PDUID[1] {
    0x07
  }
  TransactionID[2] {
    0xwwww
  }
  ParameterLength[2] {
    0x006E
  }
  AttributeListByteCount[2] {
    0x006B
  }
  AttributeLists[107] {
    /* Continuing the data element sequence of */
    /* attribute lists begun in Part 2. */
      DataElementSequence[107] {
        0b00110 0b101 0x69
        Attribute[8] {
          AttributeID[3] {
            0b00001 0b001 0x0000
          }
          AttributeValue[5] {
            /* service record handle */
            0b00001 0b010 0xffffffff
          }
```

```
        }
        Attribute[10] {
          AttributeID[3] {
            0b00001 0b001 0x0001
          }
          AttributeValue[7] {
            DataElementSequence[7] {
              0b00110 0b101 0x05
              UUID[5] {
                /* SynchronisationServiceClassID */
                0b00011 0b010 0xssssssss
              }
            }
          }
        }
        Attribute[35] {
          AttributeID[3] {
            0b00001 0b001 0x000C
          }
          AttributeValue[32] {
            /* IconURL; '*' replaced by client application */
            0b01000 0b101 0x1E
            "http://DevManufacturer/icons/*"
          }
        }
        Attribute[18] {
          AttributeID[3] {
            0b00001 0b001 0x0100
          }
          AttributeValue[15] {
            /* service name */
            0b00100 0b101 0x0D
            "Calendar Sync"
          }
        }
        Attribute[29] {
          AttributeID[3] {
            0b00001 0b001 0x0102
          }
          AttributeValue[26] {
            /* service provider */
            0b00100 0b101 0x18
            "Device Manufacturer Inc."
          }
        }
        Attribute[5] {
          AttributeID[3] {
            0b00001 0b001 0x0301
          }
          AttributeValue[2] {
            /* Supported Data Store 'calendar' */
            0b00001 0b000 0x03
          }
        }
      }
    /* This completes the data element sequence */
    /* of attribute lists begun in Part 2.
```

```
  }
  ContinuationState[1] {
    /* no continuation state */
    0x00
  }
}
```

GENERIC ACCESS PROFILE

This profile defines the generic procedures related to discovery of Bluetooth devices (idle mode procedures) and link management aspects of connecting to Bluetooth devices (connecting mode procedures). It also defines procedures related to use of different security levels. In addition, this profile includes common format requirements for parameters accessible on the user interface level.

CONTENTS

1 Introduction 264
1.1 Scope 264
1.2 Symbols and conventions 264
1.2.1 Requirement status symbols 264
1.2.2 Signaling diagram conventions 265
1.2.3 Notation for timers and counters 265
2 Profile overview 266
2.1 Profile stack 266
2.2 Configurations and roles 266
2.3 User requirements and scenarios 267
2.4 Profile fundamentals 268
2.5 Conformance 268
3 User interface aspects 269
3.1 The user interface level 269
3.2 Representation of Bluetooth parameters 269
3.2.1 Bluetooth device address (BD_ADDR) 269
3.2.2 Bluetooth device name (the user-friendly name) 269
3.2.3 Bluetooth passkey (Bluetooth PIN) 270
3.2.4 Class of Device 271
3.3 Pairing 272
4 Modes 273
4.1 Discoverability modes 273
4.1.1 Non-discoverable mode 274
4.1.2 Limited discoverable mode 274
4.1.3 General discoverable mode 275
4.2 Connectability modes 277
4.2.1 Non-connectable mode 277
4.2.2 Connectable mode 277
4.3 Bondable modes 279
4.3.1 Non-bondable mode 279
4.3.2 Bondable mode 279
5 Security Aspects 281
5.1 Authentication 281
5.1.1 Purpose 281
5.1.2 Term on UI level 281
5.1.3 Procedure 282
5.1.4 Conditions 282

5.2 Security modes 282
5.2.1 Legacy Security Modes 283
5.2.2 Security mode 4 (service level enforced security) 285
6 Idle Mode Procedures 300
6.1 General inquiry 300
6.1.1 Purpose 300
6.1.2 Term on UI level 300
6.1.3 Description 301
6.1.4 Conditions 301
6.2 Limited inquiry 301
6.2.1 Purpose 301
6.2.2 Term on UI level 302
6.2.3 Description 302
6.2.4 Conditions 302
6.3 Name discovery 303
6.3.1 Purpose 303
6.3.2 Term on UI level 303
6.3.3 Description 303
6.3.4 Conditions 304
6.4 Device discovery 304
6.4.1 Purpose 304
6.4.2 Term on UI level 304
6.4.3 Description 305
6.4.4 Conditions 305
6.5 Bonding 305
6.5.1 Purpose 305
6.5.2 Term on UI level 305
6.5.3 Description 306
6.5.4 Conditions 307
7 Establishment procedures 309
7.1 Link establishment 309
7.1.1 Purpose 309
7.1.2 Term on UI level 309
7.1.3 Description 310
7.1.4 Conditions 311
7.2 Channel establishment 312
7.2.1 Purpose 312
7.2.2 Term on UI level 312

7.2.3 Description 312
7.2.4 Conditions 313
7.3 Connection establishment 314
7.3.1 Purpose 314
7.3.2 Term on UI level 314
7.3.3 Description 314
7.3.4 Conditions 315
7.4 Establishment of additional connection 315

8 Extended Inquiry Response Data Format 316
8.1 EIR Data Type Definitions 317
8.1.1 Service Class UUIDs 317
8.1.2 Local Name 318
8.1.3 Flags 318
8.1.4 Manufacturer Specific Data 319
8.1.5 TX Power Level 319
8.1.6 Secure Simple Pairing Out of Band (OOB) 319
8.2 Example Extended Inquiry Response 320

9 Definitions 322
9.1 General definitions 322
9.2 Connection-related definitions 322
9.3 Device-related definitions 323
9.4 Procedure-related definitions 324
9.5 Security-related definitions 324

10 Appendix A (Normative): Timers and constants 326

11 Appendix B (Informative): Information Flows of Related Procedures 327
11.1 LMP-authentication 327
11.2 LMP-pairing 328
11.3 Service discovery 329

12 References 330

FOREWORD

Interoperability between devices from different manufacturers is provided for a specific service and use case, if the devices conform to a Bluetooth SIG-defined profile specification. A profile defines a selection of messages and procedures (generally termed *capabilities*) from the Bluetooth SIG specifications and gives a description of the air interface for specified service(s) and use case(s).

All defined features are process-mandatory. This means that, if a feature is used, it is used in a specified manner. Whether the provision of a feature is mandatory or optional is stated separately for both sides of the Bluetooth air interface.

1 INTRODUCTION

1.1 SCOPE

The purpose of the Generic Access Profile is:

To introduce definitions, recommendations and common requirements related to modes and access procedures that are to be used by transport and application profiles.

To describe how devices are to behave in standby and connecting states in order to guarantee that links and channels always can be established between Bluetooth devices, and that multi-profile operation is possible. Special focus is put on discovery, link establishment and security procedures.

To state requirements on user interface aspects, mainly coding schemes and names of procedures and parameters, that are needed to guarantee a satisfactory user experience.

1.2 SYMBOLS AND CONVENTIONS

1.2.1 Requirement status symbols

In this document (especially in the profile requirements tables), the following symbols are used:

‘M’ for mandatory to support (used for capabilities that shall be used in the profile);

’O’ for optional to support (used for capabilities that can be used in the profile);

‘C’ for conditional support (used for capabilities that shall be used in case a certain other capability is supported);

‘X’ for excluded (used for capabilities that may be supported by the unit but shall never be used in the profile);

’N/A’ for not applicable (in the given context it is impossible to use this capability).

Some excluded capabilities are capabilities that, according to the relevant Bluetooth specification, are mandatory. These are features that may degrade operation of devices following this profile. Therefore, these features shall never be activated while a unit is operating as a unit within this profile.

In this specification, the word *shall* is used for mandatory requirements, the word *should* is used to express recommendations and the word *may* is used for options.

1.2.2 Signaling diagram conventions

The following arrows are used in diagrams describing procedures:

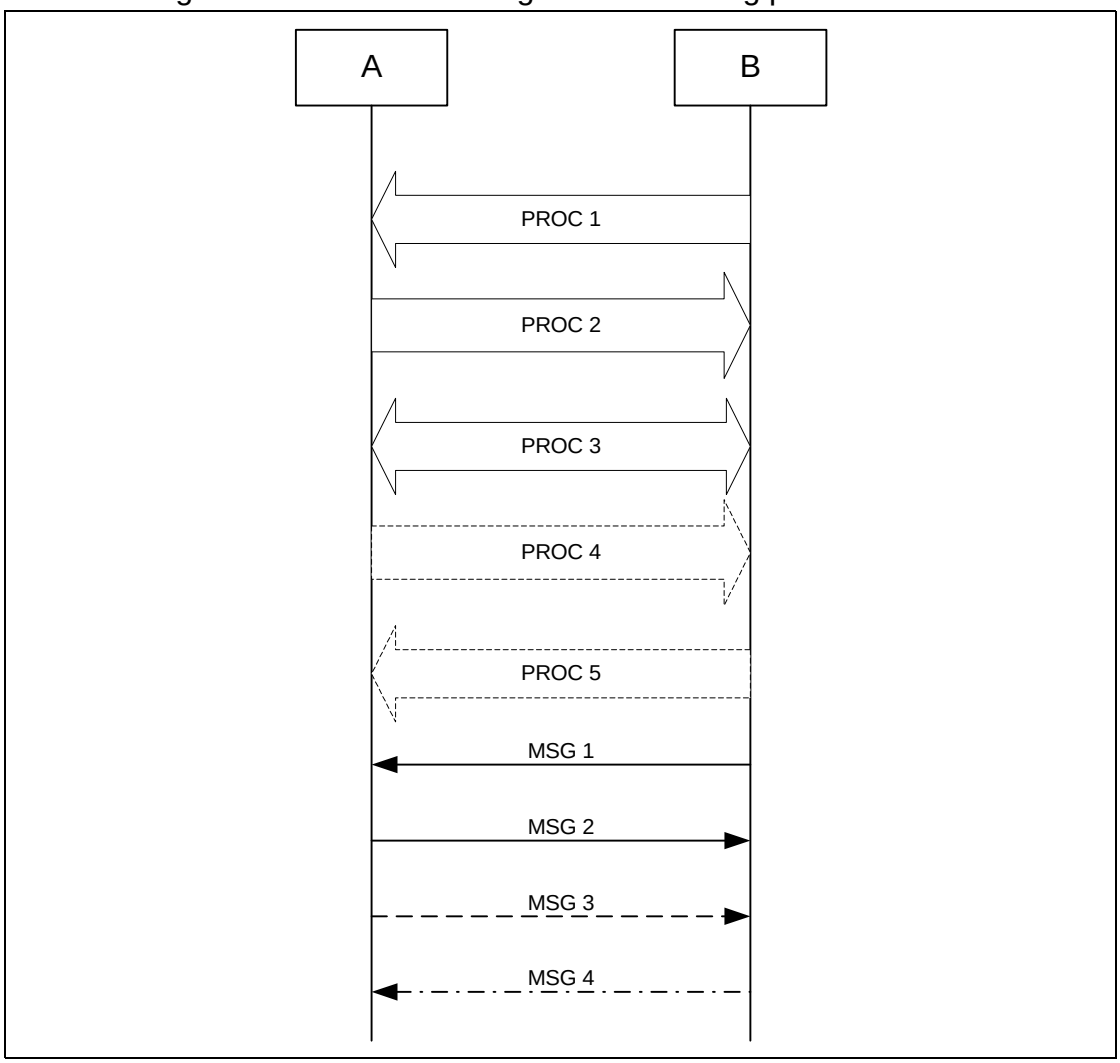

Figure 1.1: Arrows used in signaling diagramsF

In the figure above, the following cases are shown: PROC1 is a sub-procedure initiated by B. PROC2 is a sub-procedure initiated by A. PROC3 is a sub-procedure where the initiating side is undefined (may be both A or B). Dashed arrows denote optional steps. PROC4 indicates an optional sub-procedure initiated by A, and PROC5 indicates an optional sub-procedure initiated by B.

MSG1 is a message sent from B to A. MSG2 is a message sent from A to B. MSG3 indicates an optional message from A to B, and MSG4 indicates a conditional message from B to A.

1.2.3 Notation for timers and counters

Timers are introduced specific to this profile. To distinguish them from timers used in the Bluetooth protocol specifications and other profiles, these timers are named in the following format: 'T_{GAP}*(nnn)*'.

2 PROFILE OVERVIEW

2.1 PROFILE STACK

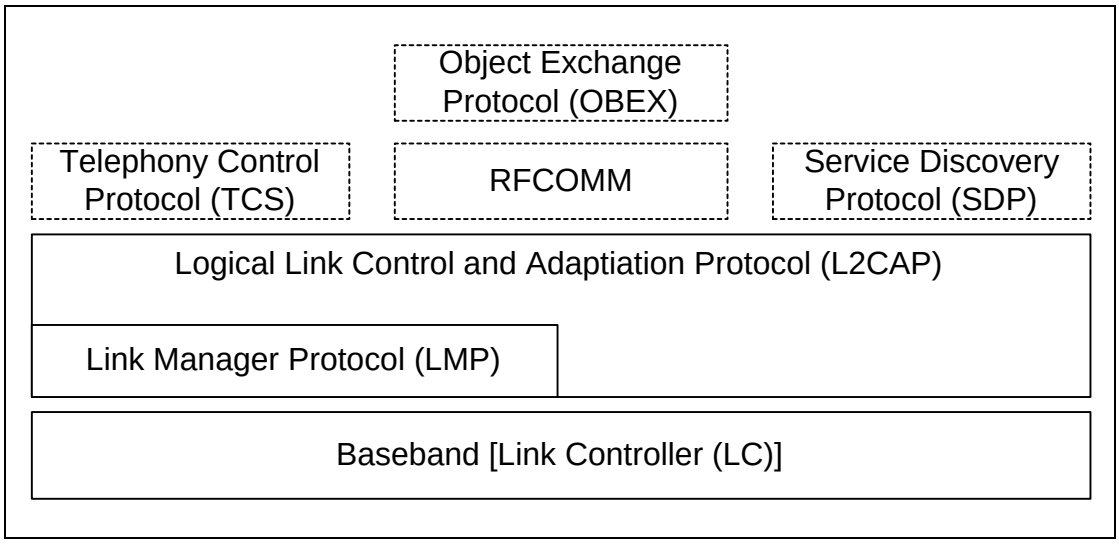

Figure 2.1: Profile stack covered by this profile.

The main purpose of this profile is to describe the use of the lower layers of the Bluetooth protocol stack (LC and LMP). To describe security related alternatives, also higher layers (L2CAP, RFCOMM and OBEX) are included.

2.2 CONFIGURATIONS AND ROLES

For the descriptions in this profile of the roles that the two devices involved in a Bluetooth communication can take, the generic notation of the A-party (the *paging device* in case of link establishment, or *initiator* in case of another procedure on an established link) and the B-party (*paged device* or *acceptor*) is used. The A-party is the one that, for a given procedure, initiates the establishment of the physical link or initiates a transaction on an existing link.

This profile handles the procedures between two devices related to discovery and connecting (link and connection establishment) for the case where none of the two devices has any link established as well as the case where (at least) one device has a link established (possibly to a third device) before starting the described procedure.

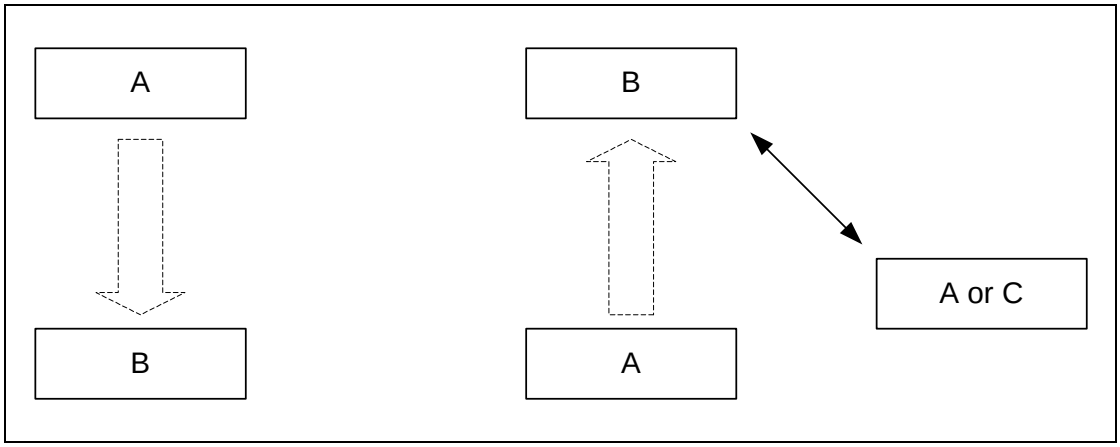

Figure 2.2: This profile covers procedures initiated by one device (A) towards another device (B) that may or may not have an existing Bluetooth link active.

The initiator and the acceptor generally operate the generic procedures according to this profile or another profile referring to this profile. If the acceptor operates according to several profiles simultaneously, this profile describes generic mechanisms for how to handle this.

2.3 USER REQUIREMENTS AND SCENARIOS

The Bluetooth user should in principle be able to connect a Bluetooth device to any other Bluetooth device. Even if the two connected devices don't share any common application, it should be possible for the user to find this out using basic Bluetooth capabilities. When the two devices do share the same application but are from different manufacturers, the ability to connect them should not be blocked just because manufacturers choose to call basic Bluetooth capabilities by different names on the user interface level or implement basic procedures to be executed in different orders.

2.4 PROFILE FUNDAMENTALS

This profile states the requirements on names, values and coding schemes used for names of parameters and procedures experienced on the user interface level.

This profile defines modes of operation that are not service- or profile-specific, but that are generic and can be used by profiles referring to this profile, and by devices implementing multiple profiles.

This profile defines the general procedures that can be used for discovering identities, names and basic capabilities of other Bluetooth devices that are in a mode where they can be discoverable. Only procedures where no channel or connection establishment is used are specified.

This profile defines the general procedure for how to create bonds (i.e. dedicated exchange of link keys) between Bluetooth devices.

This profile describes the general procedures that can be used for establishing connections to other Bluetooth devices that are in mode that allows them to accept connections and service requests.

2.5 CONFORMANCE

Bluetooth devices that do not conform to any other Bluetooth profile shall conform to this profile to ensure basic interoperability.

Bluetooth devices that conform to another Bluetooth profile may use adaptations of the generic procedures as specified by that other profile. They shall, however, be compatible with devices compliant to this profile at least on the level of the supported generic procedures.

If conformance to this profile is claimed, all capabilities indicated mandatory for this profile shall be supported in the specified manner (process-mandatory). This also applies for all optional and conditional capabilities for which support is indicated. All mandatory capabilities, and optional and conditional capabilities for which support is indicated, are subject to verification as part of the Bluetooth certification program.

3 USER INTERFACE ASPECTS

3.1 THE USER INTERFACE LEVEL

In the context of this specification, the user interface level refers to places (such as displays, dialog boxes, manuals, packaging, advertising, etc.) where users of Bluetooth devices encounters names, values and numerical representation of Bluetooth terminology and parameters.

This profile specifies the generic terms that should be used on the user interface level.

3.2 REPRESENTATION OF BLUETOOTH PARAMETERS

3.2.1 Bluetooth device address (BD_ADDR)

3.2.1.1 Definition

BD_ADDR is the address used by a Bluetooth device as defined in [2]. It is received from a remote device during the device discovery procedure.

3.2.1.2 Term on user interface level

When the Bluetooth address is referred to on UI level, the term ’Bluetooth Device Address’ should be used.

3.2.1.3 Representation

On BB level the BD_ADDR is represented as 48 bits [2].

On the UI level the Bluetooth address shall be represented as 12 hexadecimal characters, possibly divided into sub-parts separated by’:’.
(E.g., ’000C3E3A4B69’ or ’00:0C:3E:3A:4B:69’.) At UI level, any number shall have the MSB -> LSB (from left to right) ’natural’ ordering (e.g., the number ’16’ shall be shown as ’0x10’).

3.2.2 Bluetooth device name (the user-friendly name)

3.2.2.1 Definition

The Bluetooth device name is the user-friendly name that a Bluetooth device presents itself with. It is a character string returned in LMP_name_res as response to a LMP_name_req.

3.2.2.2 Term on user interface level

When the Bluetooth device name is referred to on UI level, the term ’Bluetooth Device Name’ should be used.

3.2.2.3 Representation

The Bluetooth device name can be up to 248 bytes maximum according to [3]. It shall be encoded according to UTF-8 (i.e. name entered on UI level may be down to 82 characters outside the Unicode range 0x00-0x7F are used).

A device can not expect that a general remote device is able to handle more than the first 40 characters of the Bluetooth device name. If a remote device has limited display capabilities, it may use only the first 20 characters.

3.2.3 Bluetooth passkey (Bluetooth PIN)

3.2.3.1 Definition

The Bluetooth PIN is used to authenticate two Bluetooth devices (that have not previously exchanged link keys) to each other and create a trusted relationship between them. The PIN is used in the pairing procedure (see Section 11.2 on page 328) to generate the initial link key that is used for further authentication.

The PIN may be entered on UI level but may also be stored in the device; e.g. in the case of a device without sufficient MMI for entering and displaying digits.

3.2.3.2 Terms at user interface level

When the Bluetooth PIN is referred to on UI level, the term ’Bluetooth Passkey’ should be used.

3.2.3.3 Representation

The Bluetooth PIN has different representations on different levels. PINBB is used on baseband level, and PINUI is used on user interface level. PINBB is the PIN used by [1] for calculating the initialization key during the pairing procedure. PINUI is the character representation of the PIN that is entered on UI level. The transformation from PINUI to PINBB shall be according to UTF-8. According to [1], PINBB can be 128 bits (16 bytes).

PIN codes may be up to 16 characters. In order to take advantage of the full level of security all PINs should be 16 characters long. Variable PINs should be composed of alphanumeric characters chosen from within the Unicode range 0x00-0x7F. If the PIN contains any decimal digits these shall be encoded using the Unicode Basic Latin characters (e.g. code points 0x30 to 0x39) (Note 1).

For compatibility with devices with numeric keypads fixed PINs shall be composed of only decimal digits, and variable PINS may be composed of only decimal digits.

If a device supports entry of characters outside the Unicode range 0x00-0x7F other Unicode code points may be used (Note 2), except the Halfwidth and Fullwidth Forms from within the Unicode range FF00 - FFEF shall not be used (Note 3).

Examples:

User-entered code	**Corresponding PIN_{BB}[0..length-1] (value as a sequence of octets in hexadecimal notation)**
’0196554200906493’	length = 16, value = 0x30 0x31 0x39 0x36 0x35 0x35 0x34 0x32 0x30 0x30 0x39 0x30 0x36 0x34 0x39 0x33
’Børnelitteratur’	length = 16, value = 0x42 0xC3 0xB8 0x72 0x6e 0x65 0x6c 0x69 0x74 0x74 0x65 0x72 0x61 0x74 0x75 0x72

Note 1: This is to prevent interoperability problems since there are decimal digits at other code points (e.g. the Fullwidth digits at code points 0xff10 to 0xff19).

Note 2: Unicode characters outside the Basic Latin range (0x00 - 0x7F) encode to multiple bytes, therefore when characters outside the Basic Latin range are used the maximum number of characters in the PINUI will be less than 16. The second example illustrates a case where a 16 character string encodes to 15 bytes because the character ø is outside the Basic Latin range and encodes to two bytes (0xC3 0xB8).

Note 3: This is to prevent interoperability problems since the Halfwidth and Fullwidth forms contain alternative variants of ASCII, Katakana, Hangul, punctuation and symbols. All of the characters in the Halfwidth and Fullwidth forms have other more commonly used Unicode code points.

3.2.4 Class of Device

3.2.4.1 Definition

Class of device is a parameter received during the device discovery procedure, indicating the type of device and which types of service that are supported.

3.2.4.2 Term on user interface level

The information within the Class of Device parameter should be referred to as ’Bluetooth Device Class’ (i.e. the major and minor device class fields) and ’Bluetooth Service Type’ (i.e. the service class field). The terms for the defined Bluetooth Device Types and Bluetooth Service Types are defined in [12].

When using a mix of information found in the Bluetooth Device Class and the Bluetooth Service Type, the term ’Bluetooth Device Type’ should be used.

3.2.4.3 Representation

The Class of device is a bit field and is defined in [12]. The UI-level representation of the information in the Class of device is implementation specific.

3.2.4.4 Usage

Some devices provide more than one service and a given service may be provided by different device types. Therefore, the device type does not have a one to one relationship with services supported. The major and minor device class field should not be used to determine whether a device supports any specific service(s). It may be used as an indication of devices that are most likely to support desired services before service discovery requests are made, and it may be used to guide the user when selecting among several devices that support the same service.

3.3 PAIRING

Two procedures are defined that make use of the pairing procedure defined on LMP level (LMP-pairing, see Section 11.2 on page 328). Either the user initiates the bonding procedure and enters the passkey with the explicit purpose of creating a bond (and maybe also a secure relationship) between two Bluetooth devices, or the user is requested to enter the passkey during the establishment procedure since the devices did not share a common link key beforehand. In the first case, the user is said to perform “bonding (with entering of passkey)” and in the second case the user is said to “authenticate using the passkey.”

4 MODES

Procedure	Ref.	Support
Discoverability modes:	4.1	
Non-discoverable mode		C1
Discoverable mode		O
Limited discoverable mode		C3
General discoverable mode		C4
Connectability modes:	4.2	
Non-connectable mode		O
Connectable mode		M
Bondable modes:	4.3	
Non-bondable mode		O
Bondable mode		C2
C1: If limited discoverable mode is supported, non-discoverable mode is mandatory, otherwise optional.		
C2: If the bonding procedure is supported, support for bondable mode is mandatory, otherwise optional.		
C3: If Discoverable mode is supported, support for Limited Discoverable mode is mandatory, otherwise optional.		
C4: If Discoverable mode is supported, support for General Discoverable mode is mandatory, otherwise optional		

Table 4.1: Conformance requirements related to modes defined in this section

4.1 DISCOVERABILITY MODES

With respect to inquiry, a Bluetooth device shall be either in non-discoverable mode or in a discoverable mode. (The device shall be in one, and only one, discoverability mode at a time.) The two discoverable modes defined here are called limited discoverable mode and general discoverable mode. Inquiry is defined in [2].

When a Bluetooth device is in non-discoverable mode it does not respond to inquiry.

A Bluetooth device is said to be made discoverable, or set into a discoverable mode, when it is in limited discoverable mode or in general discoverable mode. Even when a Bluetooth device is made discoverable, it may be unable to respond to inquiry due to other baseband activity, (for example, reserved synchronous slots should have priority over response packets, so that synchro-

nous links may prevent a response from being returned)[1]. A Bluetooth device that does not respond to inquiry is called a silent device.

After being made discoverable, the Bluetooth device shall be discoverable for at least $T_{GAP}(103)$.

The speed of discovery is dependent on the configuration of the inquiry scan interval and inquiry scan type of the Bluetooth device. The Host is able to configure these parameters based on trade-offs between power consumption, bandwidth and the desired speed of discovery.

4.1.1 Non-discoverable mode

4.1.1.1 Definition

When a Bluetooth device is in non-discoverable mode, it shall never enter the INQUIRY_SCAN state.

4.1.1.2 Term on UI-level

Bluetooth device is ’non-discoverable’ or in ’non-discoverable mode’.

4.1.2 Limited discoverable mode

4.1.2.1 Definition

The limited discoverable mode should be used by devices that need to be discoverable only for a limited period of time, during temporary conditions or for a specific event. The purpose is to respond to a device that makes a limited inquiry (inquiry using the LIAC).

A Bluetooth device should not be in limited discoverable mode for more than $T_{GAP}(104)$. The scanning for the limited inquiry access code can be done either in parallel or in sequence with the scanning of the general inquiry access code. When in limited discoverable mode, one of the following options shall be used.

- *Parallel scanning*

  When a Bluetooth device is in limited discoverable mode and when discovery speed is more important than power consumption or bandwidth, it is recommended that the Bluetooth device enter the INQUIRY_SCAN state at least every $T_{GAP}(105)$ and that Interlaced Inquiry scan is used.

  If, however, power consumption or bandwidth is important, but not critical, it is recommended that the Bluetooth device enter the INQUIRY_SCAN state at least every $T_{GAP}(102)$ and Interlaced Inquiry scan is used.

When power consumption or bandwidth is critical it is recommended that the Bluetooth device enter the INQUIRY_SCAN state at least every $T_{GAP}(102)$ and non-Interlaced Inquiry scan is used.

In all cases the Bluetooth device shall enter the INQUIRY_SCAN state at least once in $T_{GAP}(102)$ and scan for the GIAC and the LIAC for at least $T_{GAP}(101)$

When either a SCO or eSCO link is in operation, it is recommended to use interlaced scan to significantly decrease the discoverability time.

- *Sequential scanning*

  When a Bluetooth device is in limited discoverable mode, it shall enter the INQUIRY_SCAN state at least once in $T_{GAP}(102)$ and scan for the GIAC for at least $T_{GAP}(101)$ and enter the INQUIRY_SCAN state more often than once in $T_{GAP}(102)$ and scan for the LIAC for at least $T_{GAP}(101)$.

  If an inquiry message is received when in limited discoverable mode, the entry into the INQUIRY_RESPONSE state takes precedence over the next entries into INQUIRY_SCAN state until the inquiry response is completed.

4.1.2.2 Conditions

When a device is in limited discoverable mode it shall set bit no 13 in the Major Service Class part of the Class of Device/Service field [12].

4.1.2.3 Term on UI-level

Bluetooth device is ’discoverable’ or in ’discoverable mode’.

4.1.3 General discoverable mode

4.1.3.1 Definition

The general discoverable mode shall be used by devices that need to be discoverable continuously or for no specific condition. The purpose is to respond to a device that makes a general inquiry (inquiry using the GIAC).

4.1.3.2 Conditions

When a Bluetooth device is in general discoverable mode and when discovery speed is more important than power consumption or bandwidth, it is recommended that the Bluetooth device enter the INQUIRY_SCAN state at least every $T_{GAP}(105)$ and that Interlaced Inquiry scan is used.

If, however, power consumption or bandwidth is important, but not critical, it is recommended that the Bluetooth device enter the INQUIRY_SCAN state at least every $T_{GAP}(102)$ and Interlaced Inquiry scan is used.

When power consumption or bandwidth is critical it is recommended that the Bluetooth device enter the INQUIRY_SCAN state at least every $T_{GAP}(102)$ and Non-interlaced Inquiry scan is used.

In all cases the Bluetooth device shall enter the INQUIRY_SCAN state at least once in $T_{GAP}(102)$ and scan for the GIAC for at least $T_{GAP}(101)$.

When either a SCO or eSCO link is in operation, it is recommended to use interlaced scan to significantly decrease the discoverability time.

A device in general discoverable mode shall not respond to a LIAC inquiry.

4.1.3.3 Term on UI-level

Bluetooth device is ’discoverable’ or in ’discoverable mode’.

4.2 CONNECTABILITY MODES

With respect to paging, a Bluetooth device shall be either in non-connectable mode or connectable mode. Paging is defined in [2].

When a Bluetooth device is in non-connectable mode it does not respond to paging. When a Bluetooth device is in connectable mode it responds to paging.

The speed of connections is dependent on the configuration of the page scan interval and page scan type of the Bluetooth device. The Host is able to configure these parameters based on trade-offs between power consumption, bandwidth and the desired speed of connection.

4.2.1 Non-connectable mode

4.2.1.1 Definition

When a Bluetooth device is in non-connectable mode it shall never enter the PAGE_SCAN state.

4.2.1.2 Term on UI-level

Bluetooth device is ’non-connectable’ or in ’non-connectable mode’.

4.2.2 Connectable mode

4.2.2.1 Definition

When a Bluetooth device is in connectable mode it shall periodically enter the PAGE_SCAN state. The device makes page scan using the Bluetooth device address, BD_ADDR. Connection speed is a trade-off between power consumption / available bandwidth and speed. The Bluetooth Host is able to make these trade-offs using the Page Scan interval, Page Scan window, and Interlaced Scan parameters.

R0 page scanning should be used when connection speeds are critically important and when the paging device has a very good estimate of the Bluetooth clock. Under these conditions it is possible for paging to complete within two times the page scan window. Because the page scan interval is equal to the page scan window it is not possible for any other traffic to go over the Bluetooth link when using R0 page scanning. In R0 page scanning it is not possible to use interlaced scan. R0 page scanning is the highest power consumption mode of operation.

When connection times are critical but the other device either does not have an estimate of the Bluetooth clock or when the estimate is possibly out of date, it is better to use R1 page scanning with a very short page scan interval,

$T_{GAP}(106)$, and Interlaced scan. This configuration is also useful to achieve nearly the same connection speeds as R0 page scanning but using less power consumption and leaving bandwidth available for other connections. Under these circumstances it is possible for paging to complete within $T_{GAP}(106)$. In this case the Bluetooth device shall page scan for at least $T_{GAP}(101)$.

When connection times are important but not critical enough to sacrifice significant bandwidth and/or power consumption it is recommended to use either $T_{GAP}(107)$ or $T_{GAP}(108)$ for the scanning interval. Using Interlaced scan will reduce the connection time by half but may use twice the power consumption. Under these circumstances it is possible for paging to complete within one or two times the page scanning interval depending on whether Interlaced Scan is used. In this case the Bluetooth device shall page scan for at least $T_{GAP}(101)$.

In all cases the Bluetooth device shall enter the PAGE_SCAN state at least once in $T_{GAP}(102)$ and scan for at least $T_{GAP}(101)$.

The page scan interval, page scan window size and scan type for the six scenarios are described in the following table:

Scenario	Page Scan Interval	Page Scan Window	Scan Type
R0 (1.28s)	$T_{GAP}(107)$	$T_{GAP}(107)$	Normal scan
Fast R1 (100ms)	$T_{GAP}(106)$	$T_{GAP}(101)$	Interlaced scan
Medium R1 (1.28s)	$T_{GAP}(107)$	$T_{GAP}(101)$	Interlaced scan
Slow R1 (1.28s)	$T_{GAP}(107)$	$T_{GAP}(101)$	Normal scan
Fast R2 (2.56s)	$T_{GAP}(108)$	$T_{GAP}(101)$	Interlaced scan
Slow R2 (2.56s)	$T_{GAP}(108)$	$T_{GAP}(101)$	Normal scan

Table 4.2: Page scan parameters for connection speed scenarios

When either a SCO or eSCO link is in operation, it is recommended to use interlaced scan to significantly decrease the connection time.

4.2.2.2 Term on UI-level

Bluetooth device is ’connectable’ or in ’connectable mode’.

4.3 BONDABLE MODES

With respect to bonding, a Bluetooth device shall be either in non-bondable mode or in bondable mode. In bondable mode the Bluetooth device accepts bondinginitiated by the remote device, and in non-bondable mode it does not.

4.3.1 Non-bondable mode

4.3.1.1 Definition

When a Bluetooth device is in non-bondable mode it shall not accept a pairing request that results in bonding. Devices in non-bondable mode may accept connections that do not request or require bonding.

A device in non-bondable mode shall respond to a received LMP_in_rand with LMP_not_accepted with the reason *pairing not allowed*. An HCI-compliant host stack shall respond to an HCI_PIN_Code_Request event with the HCI_PIN_Code_Request_Negative_Reply command.

When both devices support Secure Simple Pairing and are in non-bondable mode, the local host shall respond to an IO capability request with the Authentication_Requirements parameter requesting dedicated bonding or general bonding with a negative response. An HCI-compliant host stack shall respond to an HCI_IO_Capabilities_Request event with an HCI_IO_Capabilities_ Request_Negative_Reply command.

4.3.1.2 Term on UI-level

Bluetooth device is ’non-bondable’ or in ’non-bondable mode’ or “does not accept bonding”.

4.3.2 Bondable mode

4.3.2.1 Definition

When a Bluetooth device is in bondable mode, and Secure Simple Pairing is not supported by either the local or remote device, the local device shall respond to a received LMP_in_rand with LMP_accepted (or with LMP_in_rand if it has a fixed PIN). An HCI-compliant host stack shall respond to an HCI_PIN_Code_Request event with the HCI_PIN_Code_Request_Reply command.

When both devices support Secure Simple Pairing, the local host shall respond to a user confirmation request with a positive response. An HCI-compliant host stack shall respond to an HCI_User_Confirmation_Request event with an HCI_User_Confirmation_Request_Reply command or an HCI_User_Passkey_Request event with an HCI_User_Passkey_Request_Reply command.

4.3.2.2 Term on UI-level

Bluetooth device is ’bondable’ or in ’bondable mode’ or “accepts bonding”.

5 SECURITY ASPECTS

	Procedure	Ref.	Support
1	Authentication	5.1	M
2	**Security modes**	**5.2**	
	Security mode 1		Excluded
	Security mode 2		O.1
	Security mode 3		Excluded
	Security mode 4		M
O.1: Security Mode 2 may only be used for backwards compatibility when the remote device does not support Secure Simple Pairing.			

Table 5.1: Conformance requirements related to the generic authentication procedure and the security modes defined in this section

5.1 AUTHENTICATION

5.1.1 Purpose

The generic authentication procedure describes how the LMP-authentication and LMP-pairing procedures are used when authentication is initiated by one Bluetooth device towards another, depending on if a link key exists or not and if pairing is allowed or not.

5.1.2 Term on UI level

'Bluetooth authentication'.

5.1.3 Procedure

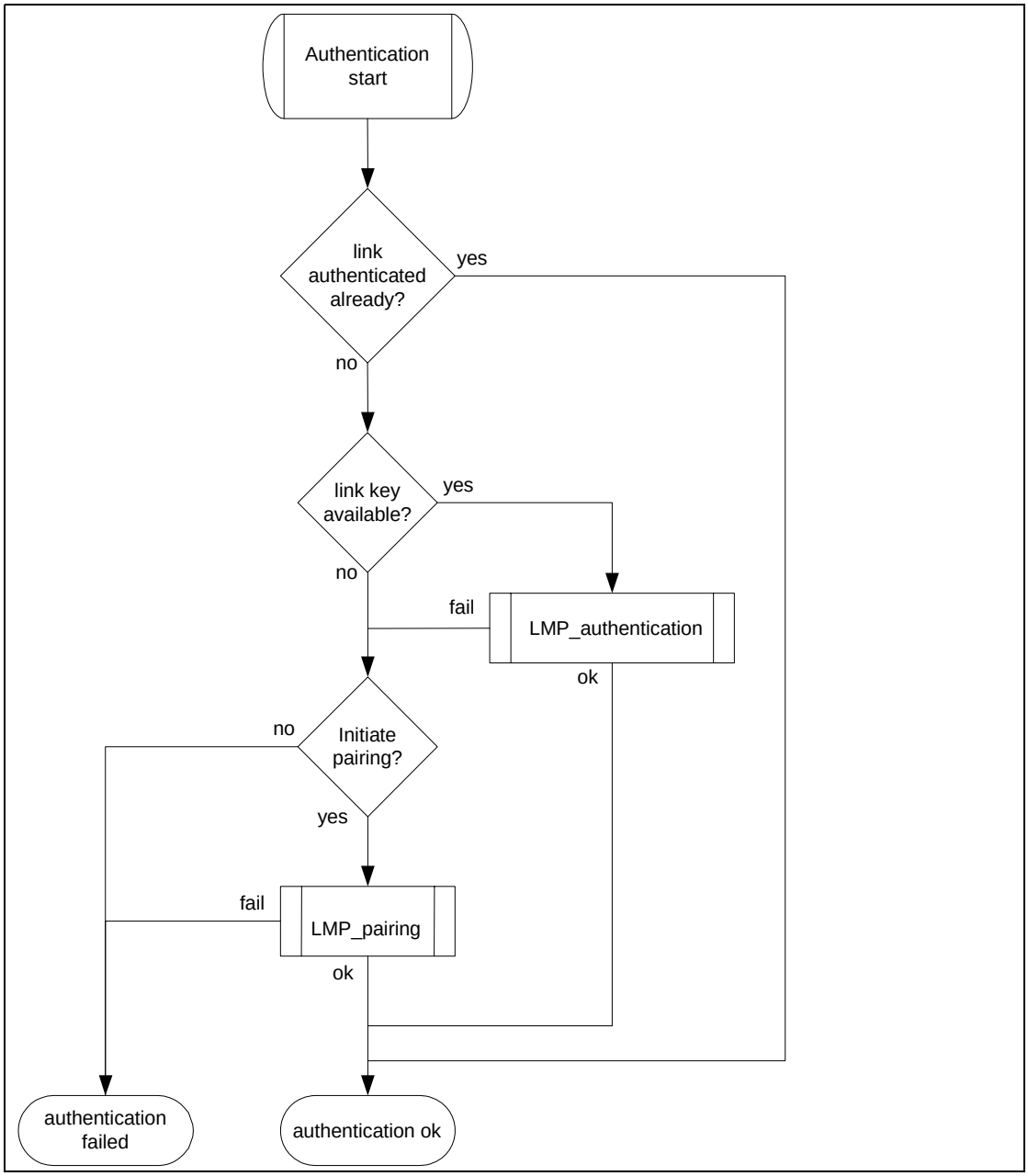

Figure 5.1: Definition of the generic authentication procedure.

5.1.4 Conditions

The local device shall initiate authentication after link establishment. The remote device may initiate security during or after link establishment.

5.2 SECURITY MODES

The following flow chart provides an overview of the channel establishment procedures.

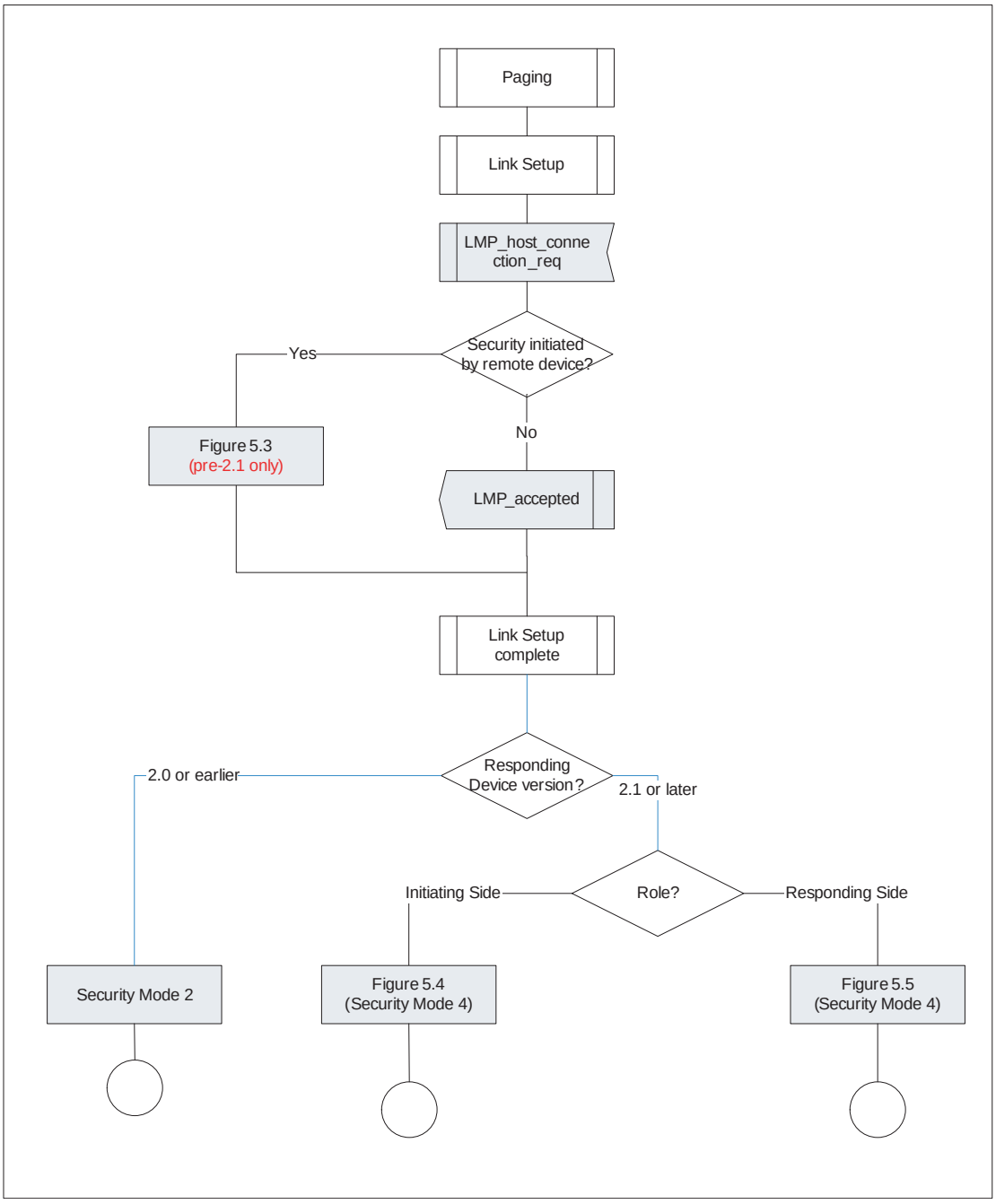

Figure 5.2: Channel establishment with security.

A device may support two security modes simultaneously: security mode 2 for backwards compatibility with remote devices that do not support Secure Simple Pairing and security mode 4 for devices that support Secure Simple Pairing

5.2.1 Legacy Security Modes

Legacy security modes apply to those devices with a Controller or a Host that does not support SSP.

5.2.1.1 Security mode 1 (non-secure)

When a remote Bluetooth device is in security mode 1 it will never initiate any security procedure (i.e., it will never send LMP_au_rand, LMP_in_rand or LMP_encryption_mode_req).

5.2.1.2 Security mode 2 (service level enforced security)

When a remote Bluetooth device is in security mode 2 it will not initiate any security procedure before a channel establishment request (L2CAP_ConnectReq) has been received or a channel establishment procedure has been initiated by itself. (The behavior of a device in security mode 2 is further described in [11].) Whether a security procedure is initiated or not depends on the security requirements of the requested channel or service.

A Bluetooth device in security mode 2 should classify the security requirements of its services using at least the following attributes:

- Authorization required
- Authentication required
- Encryption required

Note: Security mode 1 can be considered (at least from a remote device point of view) as a special case of security mode 2 where no service has registered any security requirements.

5.2.1.3 Security modes 3 (link level enforced security)

When a remote Bluetooth device is in security mode 3 it will initiate security procedures before it sends LMP_setup_complete. (The behavior of a device in security mode 3 is as described in [3].)

A Bluetooth device in security mode 3 may reject the host connection request (respond with LMP_not_accepted to the LMP_host_connection_req) based on settings in the host (e.g. only communication with pre-paired devices allowed).

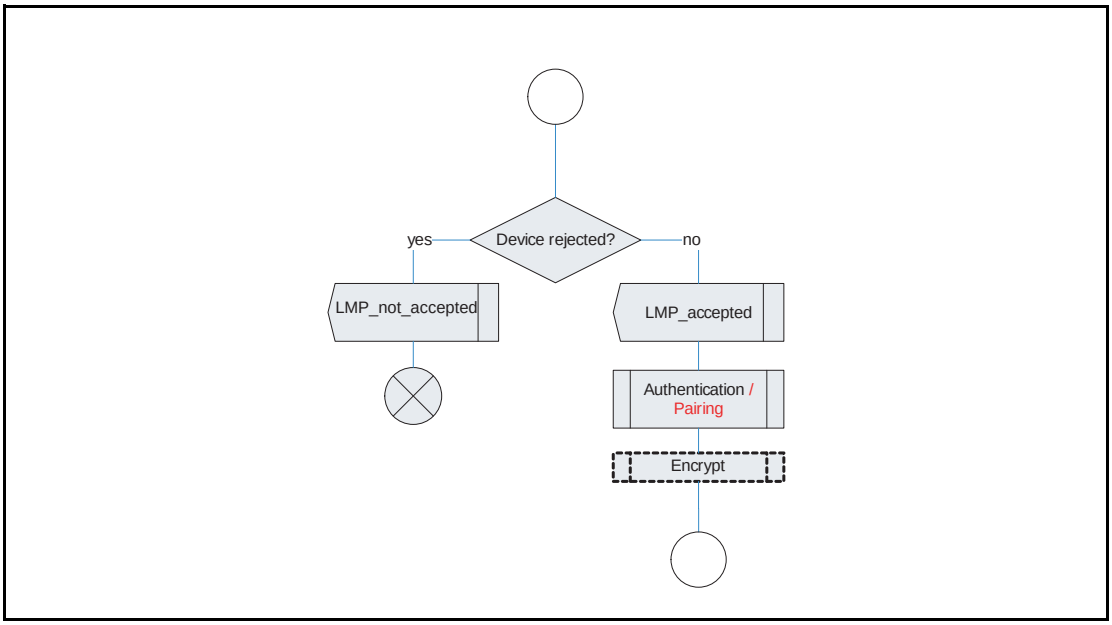

Figure 5.3: Security mode 3 with a legacy remote device

5.2.2 Security mode 4 (service level enforced security)

A Bluetooth device in security mode 4 shall classify the security requirements of its services using at least the following attributes (in order of decreasing security):

- Authenticated link key required
- Unauthenticated link key required
- Security optional – SDP onlyLimited to specific services (see Section 5.2.2.8).

An authenticated link key is a link key where either the numeric comparison, out-of-band or passkey entry simple pairing association models were used. An authenticated link key has protection against man-in-the-middle (MITM) attacks. To ensure that an authenticated link key is created during the Simple Pairing procedure, the Authentication_Requirements parameter should be set to one of the MITM Protection Required options. An *unauthenticated link key* is a link key where the just works Secure Simple Pairing association model was used. An unauthenticated link key does not have protection against MITM attacks.

When both devices support Secure Simple Pairing, GAP shall require at least an unauthenticated link key and enabling encryption for all connections except those allowed to have security level 0 (see Section 5.2.2.8). A profile or protocol may define services that require more security (e.g. an authenticated link key) or no security (although unencrypted connections are only allowed when connecting to a service allowed to have security level 0). To allow an unauthenticated link key to be created during the Simple Pairing procedure, the

Authentication_Requirements parameter may be set to one of the MITM Protection Not Required options.

When the device is in Bondable Mode, it shall enable Secure Simple Pairing mode prior to entering Connectable Mode or establishing a link.

A Bluetooth device in security mode 4 shall respond to authentication requests during link establishment when the remote device is in security mode 3 for backwards compatibility reasons.

A Bluetooth device in security mode 4 enforces its security requirements before it attempts to access services offered by a remote device and before it grants access to services it offers to remote devices. Service access may occur via L2CAP channels or via channels established by protocols above L2CAP such as RFCOMM.

For services transmitting unicast data over the connectionless L2CAP channel, the transmitting device shall enforce its security requirements prior to sending data. There is no mechanism for a device receiving data via the L2CAP connectionless channel to prevent unencrypted data from being received. Hence, Section 5.2.2.1 addresses unicast connectionless data transmission together with devices initiating connection-oriented channels while Section 5.2.2.2 covers only devices responding to requests for connection-oriented channel establishment but does not cover unicast connectionless data reception.

5.2.2.1 Security for Access to Remote Service (Initiating Side)

When the responding device does not support Secure Simple Pairing, it may disconnect the link while the initiating device is requesting the PIN to be entered by the user. This may occur due to the lack of an L2CAP channel being present for longer than an implementation-specific amount of time (e.g. a few seconds). When this occurs, the initiating device shall allow the user to complete entering the PIN and shall then re-page the remote device and restart the pairing procedure (see [Vol. 2, Part C] Section 4.2.2 on page 246) using the PIN entered.

5.2.2.1.1 Pairing Required for Access to Remote Service

When a Bluetooth device in security mode 4 initiates access to a remote service via a connection-oriented L2CAP channel and a sufficient link-key is not available, the local device shall perform pairing procedures and enable encryption before sending a channel establishment request (L2CAP_ConnectReq or higher layer channel establishment request such as that of RFCOMM).

When a Bluetooth device in security mode 4 transmits data to a remote service via the unicast connectionless L2CAP channel and a sufficient link-key is not available, the local device shall perform pairing procedures and enable encryption before transmitting unicast data on the connectionless L2CAP channel.

See Section 5.2.2.8 on page 296 for details on determining whether or not a link key is sufficient.

If pairing does not succeed, the local device shall not send a channel establishment request. The local device may re-try pairing up to three (3) times. If pairing fails three consecutive times, the local device shall disconnect the ACL link with error code 0x05 - Authentication Failure.

If the link key generated is not at least as good as the expected or required type, the local device shall fail the establishment and may disconnect the ACL link with error code 0x05 - Authentication Failure.

5.2.2.1.2 Authentication Required for Access to Remote Service

When a Bluetooth device in security mode 4 initiates access to a remote service via a connection-oriented L2CAP channel and a sufficient link key is available for the remote device, it shall authenticate the remote device and enable encryption before sending a channel establishment request ().

When a Bluetooth device in security mode 4 transmits unicast data to a remote service via the connectionless L2CAP channel and security is required for the application and a sufficient link-key is available then the local device shall authenticate the remote device and enable encryption before transmitting unicast data on the L2CAP connectionless channel.

See Section 5.2.2.8 on page 296 for details on determining whether or not a link key is sufficient.

If authentication is required by the service but does not succeed, or if a sufficient link-key is not available, then the local device shall not enable encryption and shall not send a channel establishment request and shall not send any unicast data via the L2CAP connectionless channel for that application. The host may then notify the user and offer to perform pairing.

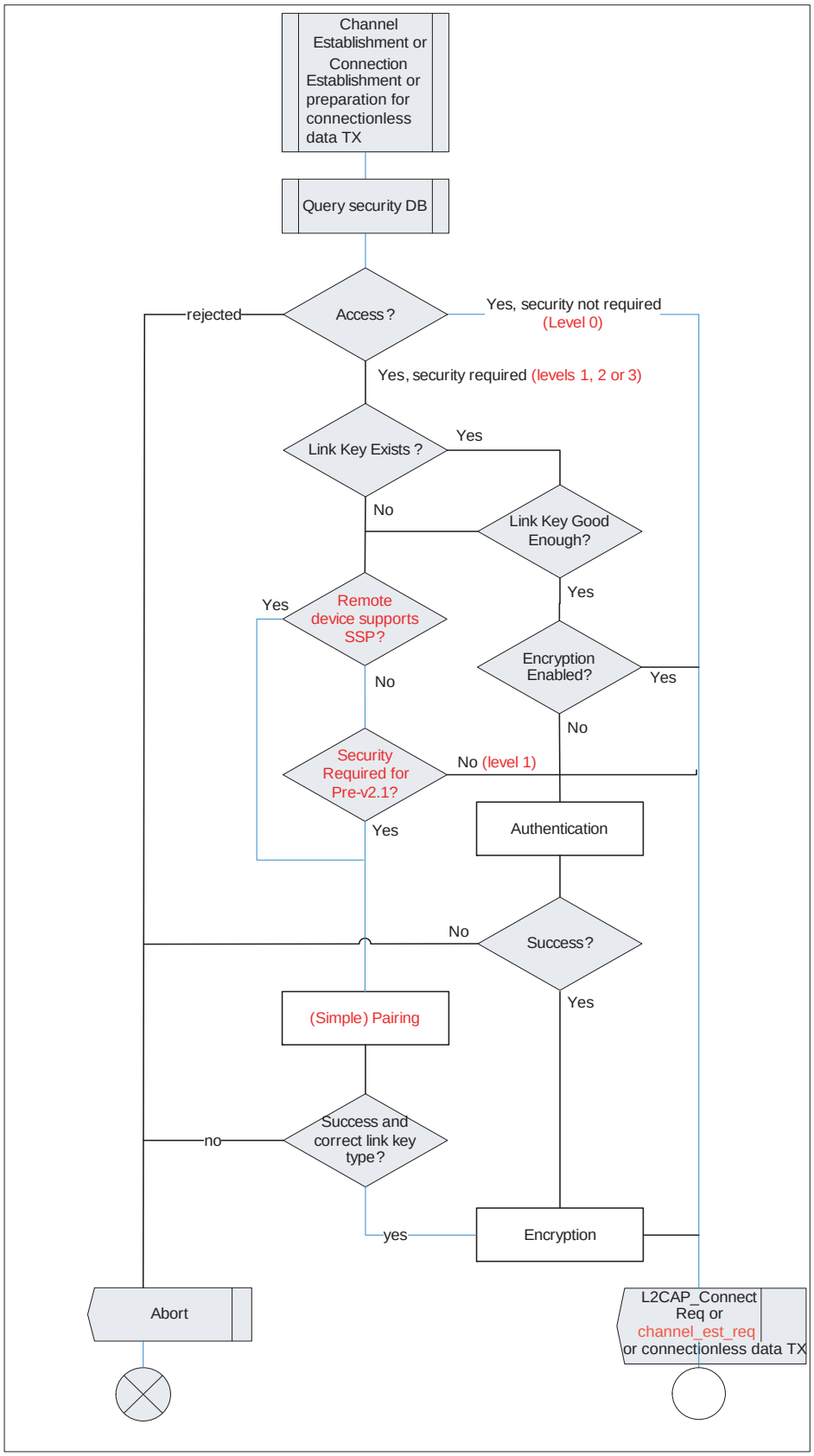

Figure 5.4: Channel establishment using security mode 4 for initiating side

5.2.2.2 Security for Access to Local Service by Remote Device (Responding Side)

When L2CAP is the channel establishment protocol being used for the requested service, an L2CAP_ConnectRsp signalling packet shall be sent by the responding device containing the result code 0x0001 (connection pending) following receipt of an L2CAP_ConnectReq and prior to initiating security procedures which can result in prompting the local user for input, e.g. pairing using a PIN or Secure Simple Pairing using either the Passkey entry or Numerical Comparison association models. This will stop the L2CAP RTX timer on the remote device (which may be as short as 1 second) and will invoke the ERTX timer on the remote device, which is a minimum duration of 60 seconds.

See [Vol. 3, Part A] Section 6.1.7 on page 103, for additional information on L2CAP RTX and ERTX timers. See also [Vol. 3, Part A] Section 4.3 on page 54, for additional information on the L2CAP_ConnectRsp signalling packet, and the defined result codes.

Higher layer channel establishment protocols should be designed to restrict timeouts to be 30 seconds or longer to allow for user input, or provide mechanisms to dynamically extend timeouts when user input may be required.

If authentication or pairing fails when a remote device is attempting to access a local service, the local device shall send a negative response to the channel establishment request (L2CAP_ConnectReq or channel_est_req) indicating a security issue if possible. If the channel establishment protocol is L2CAP, then the result code 0x0003 (connection refused - security block) shall be sent in the L2CAP_ConnectRsp signal.

If the remote device has indicated support for Secure Simple Pairing, a channel establishment request is received for a service other than SDP, and encryption has not yet been enabled, then the local device shall disconnect the ACL link with error code 0x05 - Authentication Failure.

5.2.2.2.1 Pairing Required for Access to Local Service by Remote Device

When a remote device attempts to access a service offered by a Bluetooth device that is in security mode 4 and a sufficient link key exists, the local device shall authenticate the remote device after the channel establishment request is received but before a channel establishment confirmation (L2CAP_ConnectRsp with result code of 0x0000 or a higher level channel establishment confirmation such as that of RFCOMM) is sent.

See Section 5.2.2.6 for details on determining whether or not a link key is sufficient.

If pairing does not succeed, then the local device shall not send a channel establishment confirmation. The local device may retry pairing up to three (3)

times. If pairing fails three consecutive times, then the local device shall disconnect the ACL link with error code 0x05 - Authentication Failure.

If the link-key generated is not at least as good as the expected or required type, then the local device shall fail the channel establishment and may disconnect the ACL link with error code 0x05 - Authentication Failure.

5.2.2.2.2 Authentication Required for Access to Local Service by Remote Device

When a remote device attempts to access a service offered by a Bluetooth device, which is in security mode 4 and pairing is required due to the link key being absent or insufficient, the local device shall perform pairing procedures and enable encryption after the channel establishment request is received and before a channel establishment confirmation (L2CAP_ConnectRsp with result code of 0x0000 or a higher level channel establishment response such as that of RFCOMM) is sent.

See Section 5.2.2.6 for details on determining whether or not a link key is sufficient.

If authentication does not succeed, then the local device shall not send a channel establishment confirmation. The host may at this point notify the user and offer to perform pairing.

A Bluetooth device in security mode 4 shall respond to authentication and pairing requests during link establishment when the remote device is in security mode 3 for backwards compatibility reasons. However, authentication of the remote device shall be performed after the receipt of the channel establishment request is received, and before the channel establishment response is sent.

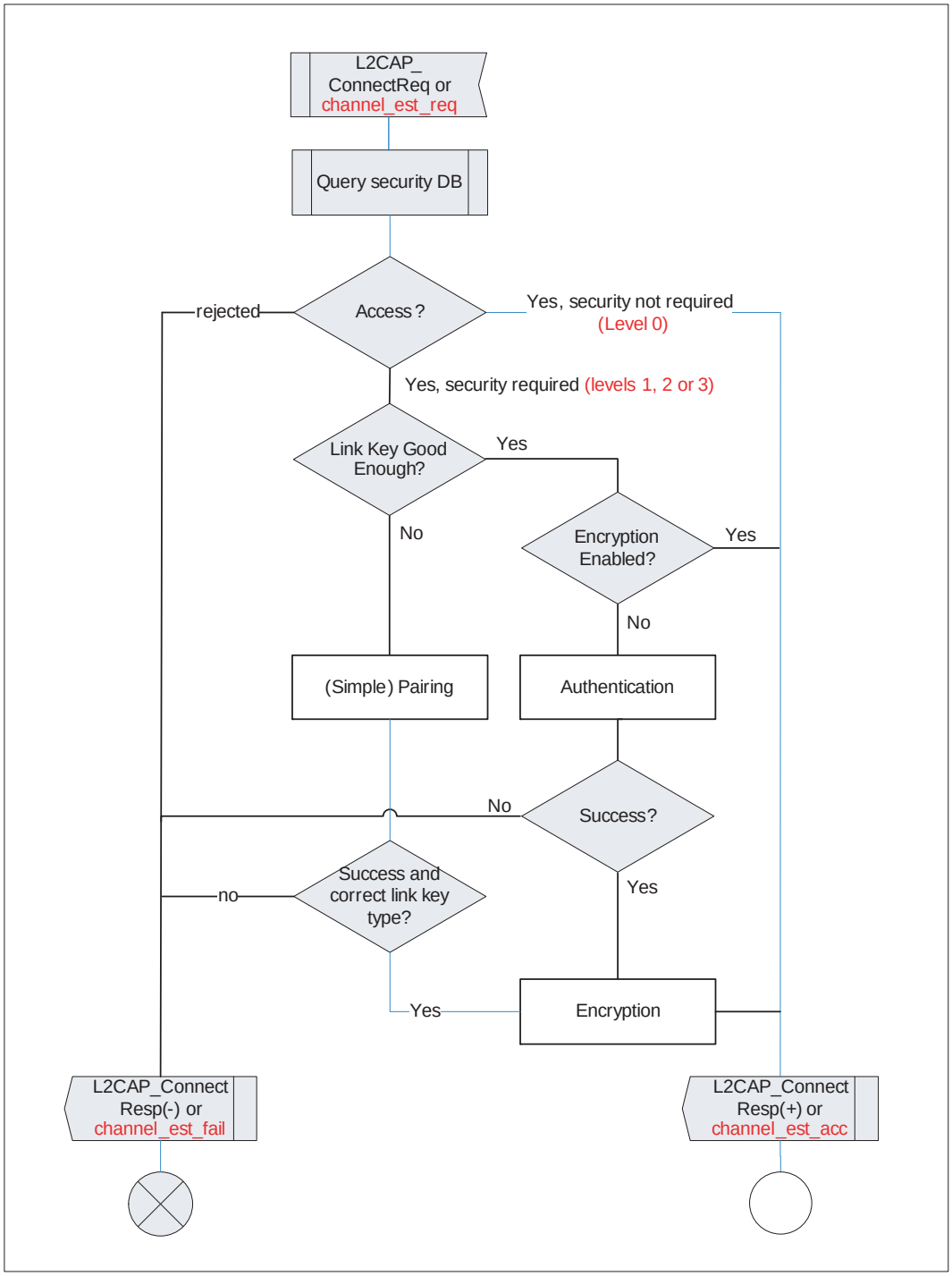

Figure 5.5: Channel establishment using security mode 4 for the responding side

5.2.2.3 Simple Pairing after Authentication Failure

When both devices support Secure Simple Pairing all non-SDP connections are encrypted regardless of whether security was required or whether the devices are bonded or not. The initial connection between the two devices will result in a link key through Secure Simple Pairing. Depending on whether or not bonding was performed and the security policy of the initiating device, the

link key may or may not be stored. When the link key is stored, subsequent connections to the same device will use authentication but this may fail if the remote device has deleted the link key. The table below defines what shall be done depending on the type of the link key and whether bonding was performed or not.

Link Key Type	Devices Bonded?	Action to take when Authentication Fails
Combination	No	Depends on security policy of the device: • Option 1: Automatically initiate pairing • Option 2: Notify user and ask if pairing is ok Option 2 is recommended.
Combination	Yes	Notify user of security failure
Unauthenticated	No	Depends on security policy of the device: • Option 1: Automatically initiate secure simple pairing • Option 2: Notify user and ask if secure simple pairing is ok. Option 1 is recommended.
Unauthenticated	Yes	Notify user of security failure
Authenticated	No	Depends on security policy of the device: • Option 1: Automatically initiate secure simple pairing • Option 2: Notify user and ask if secure simple pairing is ok Option 2 is recommended.
Authenticated	Yes	Notify user of security failure

Table 5.1: Simple Pairing after Authentication Failure

Note that non-bonded authenticated or unauthenticated link keys may be considered disposable by either device and may be deleted at any time.

5.2.2.4 IO Capabilities

Once a connection is established, if the Host determines that security is necessary and both devices support Secure Simple Pairing, the devices perform an IO capability exchange. The purpose of the IO capability exchange is to determine the authentication algorithm used in the Authentication Stage 1 phase of Simple Pairing.

The input and output capabilities are described in Table 5.2:

Capability	Description
No input	Device does not have the ability to indicate 'yes' or 'no'

Table 5.2: User Input Capabilities

Capability	Description
Yes / No	Device has at least two buttons that are mapped easily to 'yes' and 'no' or the device has a mechanism whereby the user can indicate either 'yes' or 'no' (see note 1 below).
Keyboard	Device has a numeric keyboard that can input the numbers '0' through '9' and a confirmation. Device also has two buttons that can be easily mapped to 'yes' and 'no' or the device has a mechanism whereby the user can indicate either 'yes' or 'no' (see **Note** below).

Table 5.2: User Input Capabilities

Note: 'yes' could be indicated by pressing a button within a certain time limit otherwise 'no' would be assumed.

Capability	Description
No output	Device does not have the ability to display or communicate a 6 digit decimal number
Numeric output	Device has the ability to display or communicate a 6 digit decimal number

Table 5.3: User Output Capabilities

5.2.2.5 Mapping of Input / Output Capabilities to IO Capability

The individual input and output capabilities are mapped to a single IO capability which is later used to determine which authentication algorithm will be used.

Local Output Capacity / Local Input Capacity	**No Output**	**Numeric Output**
No input	NoInputNoOutput	DisplayOnly
Yes / No	NoInputNoOutput	DisplayYesNo
Keyboard	KeyboardOnly	DisplayYesNo

Table 5.4: IO Capability mapping

When a device has OOB authentication information from the remote device, it will indicate it in the LMP_io_capability_res PDU. When either device has OOB information, the OOB authentication method will be used.

The Host may allow the Link Manager to ignore the IO capabilities and use the Numeric Comparison protocol with automatic accept by setting the Authentication_Requirements parameter to one of the MITM Protection *Not Required* options.

5.2.2.6 IO and OOB Capability Mapping to Authentication Stage 1 Method

Determining which association model to use in Authentication Stage 1 is performed in three steps. First, the devices look at the OOB Authentication Data Present parameter received in the remote IO capabilities. If either device has received OOB authentication data then the OOB association model is used. The event of receiving the OOB information is indicated by a device to its peer in the IO Capability Exchange step of simple pairing.

Device A / Device B	**Has not received remote OOB authentication data**	**Has received remote OOB authentication table**
Has not received remote OOB authentication data	Use the IO capability mapping table	Use OOB association with ra = 0 rb from OOB
Has received remote OOB authentication data	Use OOB association with ra from OOB rb = 0	Use OOB association with ra from OOB rb from OOB

Table 5.5: IO and OOB capability mapping

Second, if neither device has received OOB authentication data and if both devices have set the Authentication_Requirements parameter to one of the MITM Protection Not Required options, authentication stage 1 shall function as if both devices set their IO capabilities to DisplayOnly (e.g. Numeric comparison with automatic confirmation on both devices).

Finally, if neither device has received OOB authentication data and if one or both devices have set the Authentication_Requirements parameter to one of the *MITM Protection Required* options, the IO and OOB capabilities are mapped to the authentication stage 1 method as defined in the following table. A Host that has set the Authentication_Requirements parameter to one of the *MITM Protection Required* options shall verify that the resulting Link Key is an Authenticated Combination Key (see Section 7.7.24 in Host Controller Interface Functional Specification). The table also lists whether the combination key results in an authenticated or unauthenticated link key.

Initiator A / B Responder	Display Only	DisplayYesNo	KeyboardOnly	NoInputNoOutput
DisplayOnly	Numeric Comparison with automatic confirmation on both devices. Unauthenticated	Numeric Comparison with automatic confirmation on device B only. Unauthenticated	Passkey Entry: Responder Display, Initiator Input. Authenticated	Numeric Comparison with automatic confirmation on both devices. Unauthenticated
DisplayYesNo	Numeric Comparison with automatic confirmation on device A only. Unauthenticated	Numeric Comparison: Both Display, Both Confirm. Authenticated	Passkey Entry: Responder Display, Initiator Input. Authenticated	Numeric Comparison with automatic confirmation on device A only. Unauthenticated
Keyboard Only	Passkey Entry: Initiator Display, Responder Input. Authenticated	Passkey Entry: Initiator Display, Responder Input. Authenticated	Passkey Entry: Initiator and Responder Input. Authenticated	Numeric Comparison with automatic confirmation on both devices. Unauthenticated
NoInputNoOutput	Numeric Comparison with automatic confirmation on both devices. Unauthenticated	Numeric Comparison with automatic confirmation on device B only. Unauthenticated	Numeric Comparison with automatic confirmation on both devices. Unauthenticated	Numeric Comparison with automatic confirmation on both devices. Unauthenticated

Table 5.6: IO Capability Mapping to Authentication Stage 1

Note: The "DisplayOnly" IO capability only provides unidirectional authentication.

5.2.2.7 Out of Band (OOB)

An out of band mechanism may also be used to communicate discovery information as well as other information related to the pairing process.

The contents of the OOB data block are:

Mandatory contents:

- Length (2 bytes)
- BD_ADDR (6 bytes)

Optional contents:

- Class of Device (3 bytes)
- Simple Pairing Hash C (16 bytes)
- Simple Pairing Randomizer R (16 bytes)
- Local name (variable length)
- Other information

The length field includes all bytes in the OOB data block including the length field itself. The BD_ADDR will be a fixed field in the beginning of the OOB data block. Following the BD_ADDR will be zero or more EIR tag fields containing optional contents. The EIR tag format will be used for the optional contents.

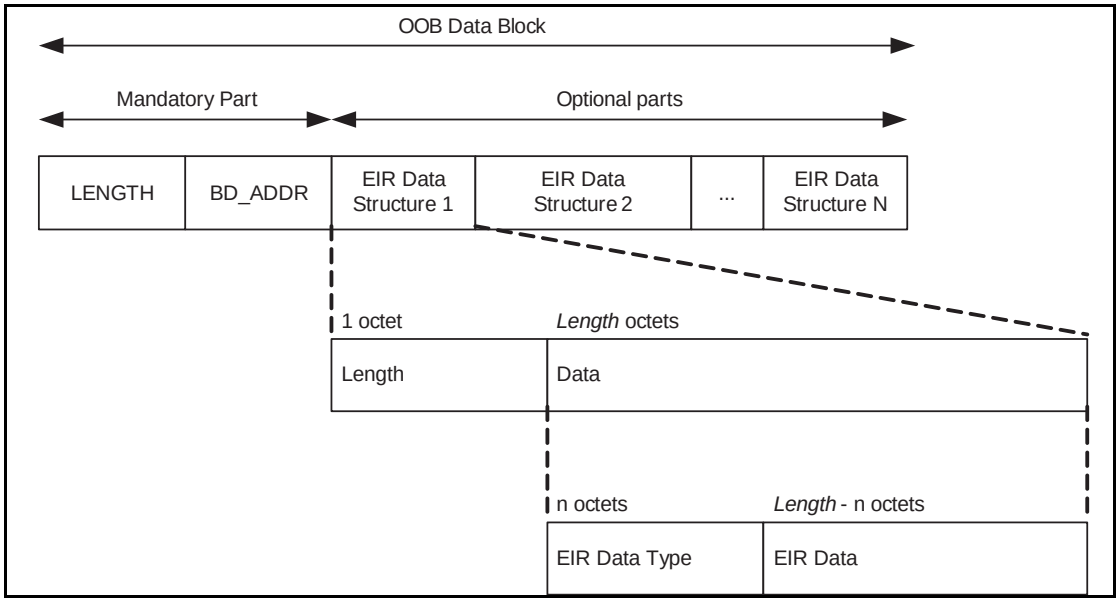

Figure 5.6: OOB Data Block Format

If Simple Pairing fails when one or both devices have OOB Authentication Data present, both devices shall discard the OOB Authentication Data and the device that originally initiated authentication shall re-initiate authentication. Note that although the user may get involved in authentication as defined by the IO capabilities of the two devices, falling back to the in-band authentication method will prevent deadlock conditions when one or both devices has stale OOB Authentication Data.

5.2.2.8 Security Database

A Bluetooth device in security mode 4 shall classify the security requirements of its services using at least the following levels attributes (in order of decreas-

ing security) for use when pairing with remote devices supporting Secure Simple Pairing:

- Level 3, for services with the following attributes:

  MITM protection required

  Encryption required

  User interaction acceptable
- Level 2, for services with the following attributes:

  MITM protection not required

  Encryption required
- Level 1, for services with the following attributes:

  MITM protection not required

  Minimal user interaction desired

One additional level is permitted for L2CAP fixed signaling channels (CIDs 0x0001, 0x0003 and 0x003F),SDP and for some service traffic sent via the connectionless L2CAP channel for services that do not require security but shall not be used for any other service traffic:

- Level 0: Service requires the following:

  MITM protection not required

  No encryption required

  No user interaction required

  Level 0 may only be used for Services with the following Service Class UUIDs:

  0x1000 + BASE_ID (Service Discovery Server)

The security level required for each service offered should be stored in a security database that is accessed to determine the type of link key that is required for to allow access to the respective service. The security level required for service data transmitted on an L2CAP connection-oriented channel may differ from the security level required for service data transmitted on another L2CAP connection-oriented channel or on the connectionless L2CAP channel. Table 5.7 on page 298 shows the type of link key required for each security level for

both remote devices that support Secure Simple Pairing (v2.1 + EDR remote devices) and for those that do not (pre-v2.1 + EDR remote devices).

Security Level Required for Service	**Link Key type required for remote devices**	**Link Key type required for pre-v2.1 remote devices**	**Comments**
Level 3 • Strong MITM protection desiredEncryption desiredUser interaction acceptable.	Authenticated	Combination (16 digit PIN recommended)	High Security
Level 2 • MITM protection not necessaryEncryption desired	Unauthenticated	Combination	Medium Security
Level 1 • MITM protection not necessary • Encryption not necessary[1] • Minimal user interaction desired.	Unauthenticated	None	Low Security
Level 0 • MITM protection not necessary • Encryption not necessary • No user interaction desired.	None	None	Permitted only for SDP and service data sent via either L2CAP fixed signaling channels or the L2CAP connectionless channel to PSMs that correspond to service class UUIDs which are allowed to utilize Level 0.

Table 5.7: Security Level mapping to link key requirements

1. Though encryption is not necessary for the service for Level 1, this specification mandates the use of encryption when the remote device is v2.1+EDR for all services other than SDP.

An *authenticated* link key is a link key where either the numeric comparison, out-of-band or passkey entry simple pairing association models were used. An authenticated link key has protection against MITM attacks. To ensure that an authenticated link key is created during the Simple Pairing procedure, the Authentication_Requirements parameter should be set to one of the *MITM Protection Required* options.

An *unauthenticated* link key is a link key where the "Just Works" just works simple pairing association model was used (see [Vol. 1, Part A] Section 5.4 on page 69). An unauthenticated link key does not have protection against MITM attacks. To allow an unauthenticated link key to be created during the Simple Pairing procedure, the Authentication_Requirements parameter may be set to one of the *MITM Protection Not Required* options.

A combination link key is a link key where the v2.0 pairing mechanism was used to generate the link-key (see [Vol. 2, Part C] Section 4.2.2.4 on page 248).

When both devices support Secure Simple Pairing, GAP shall require at least an unauthenticated link key and enabling encryption for service traffic sent or received via connection-oriented L2CAP channels. A profile or protocol may define services that require more security (for example, an authenticated link key) or no security in the case of SDP or service traffic sent via the L2CAP connectionless channel for services that do not require security.

When the device is in Bondable Mode, it shall enable Secure Simple Pairing mode prior to entering Connectable Mode or establishing a link.

A Bluetooth device in security mode 4 shall respond to authentication and pairing requests during link establishment when the remote device is in security mode 3 for backwards compatibility reasons. See Section 5.2.1.3 for more information.

The remote Controller's and remote Host's support for Secure Simple Pairing shall be determined by the Link Manager Secure Simple Pairing (Host Support) feature bit.

A previously generated link key is considered "sufficient" if the link key type is of the type required for the service, or of a higher strength. Authenticated link keys are considered higher strength than Unauthenticated or Combination keys. Unauthenticated link keys are considered higher strength than Combination keys.

6 IDLE MODE PROCEDURES

The inquiry and discovery procedures described here are applicable only to the device that initiates them (A). The requirements on the behavior of B is according to the modes specified in Section 4 on page 273 and to [3].

	Procedure	Ref.	Support
1	General inquiry	6.1	C1
2	Limited inquiry	6.2	C1
3	Name Discovery	6.3	O
4	Device discovery	6.4	O
5	Bonding	6.5	O

C1: If initiation of bonding is supported, support for simple inquiry procedure is mandatory, otherwise optional.

(Note: support for LMP-pairing is mandatory [3].)

6.1 GENERAL INQUIRY

6.1.1 Purpose

The purpose of the general inquiry procedure is to provide the initiator with the Bluetooth device address, clock, Class of Device, page scan mode, and extended inquiry response information of general discoverable devices (i.e. devices that are in range with regard to the initiator and are set to scan for inquiry messages with the General Inquiry Access Code). Also devices in limited discoverable mode will be discovered using general inquiry.

The general inquiry should be used by devices that need to discover devices that are made discoverable continuously or for no specific condition.

6.1.2 Term on UI level

'Bluetooth Device Inquiry.'

6.1.3 Description

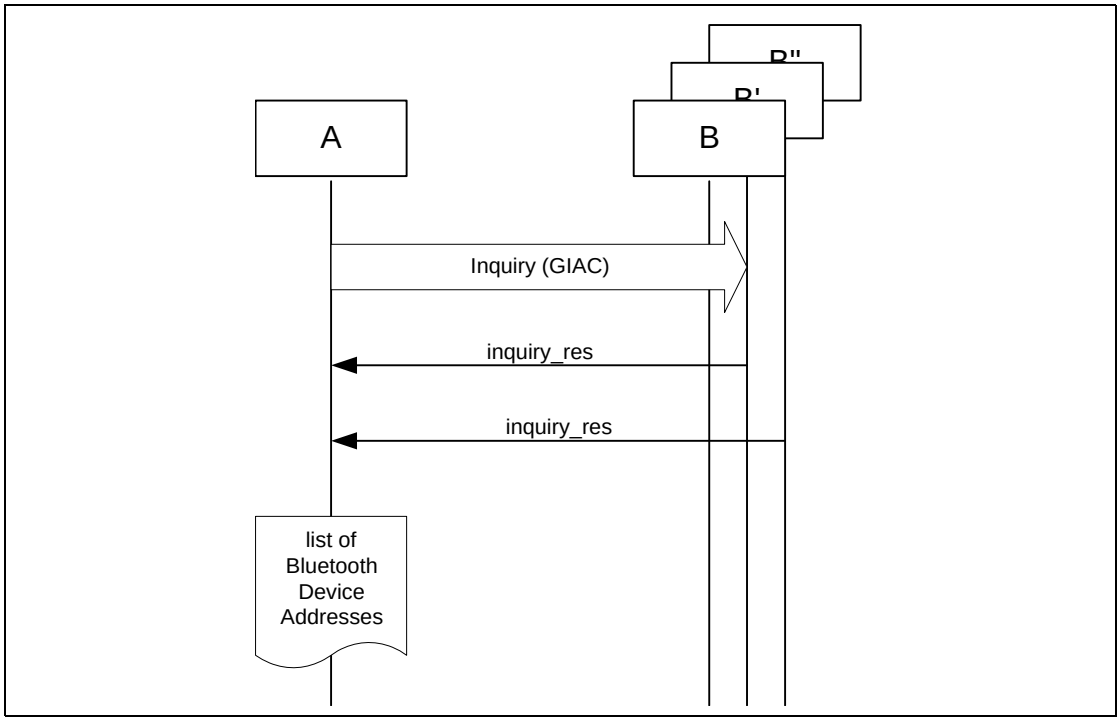

Figure 6.1: General inquiry ,where B is a device in non-discoverable mode, B´ is a device in limited discoverable mode and B" is a device in general discoverable mode. (Note that all discoverable devices are discovered using general inquiry, independent of which discoverable mode they are in.)

6.1.4 Conditions

When general inquiry is initiated by a Bluetooth device, the INQUIRY state shall last $T_{GAP}(100)$ or longer, unless the inquirer collects enough responses and determines to abort the INQUIRY state earlier. The Bluetooth device shall perform inquiry using the GIAC.

In order for Device A to receive inquiry responses, the remote devices in range have to be made discoverable (limited or general).

6.2 LIMITED INQUIRY

6.2.1 Purpose

The purpose of the limited inquiry procedure is to provide the initiator with the Bluetooth device address, clock, Class of Device, page scan mode, and extended inquiry response information of limited discoverable devices. The latter devices are devices that are in range with regard to the initiator, and may be set to scan for inquiry messages with the Limited Inquiry Access Code, in addition to scanning for inquiry messages with the General Inquiry Access Code.

The limited inquiry should be used by devices that need to discover devices that are made discoverable only for a limited period of time, during temporary conditions or for a specific event. Since it is not guaranteed that the discoverable device scans for the LIAC, the initiating device may choose any inquiry procedure (general or limited). Even if the remote device that is to be discovered is expected to be made limited discoverable (e.g. when a dedicated bonding is to be performed), the limited inquiry should be done in sequence with a general inquiry in such a way that both inquiries are completed within the time the remote device is limited discoverable, i.e. at least $T_{GAP}(103)$.

6.2.2 Term on UI level

'Bluetooth Device Inquiry'.

6.2.3 Description

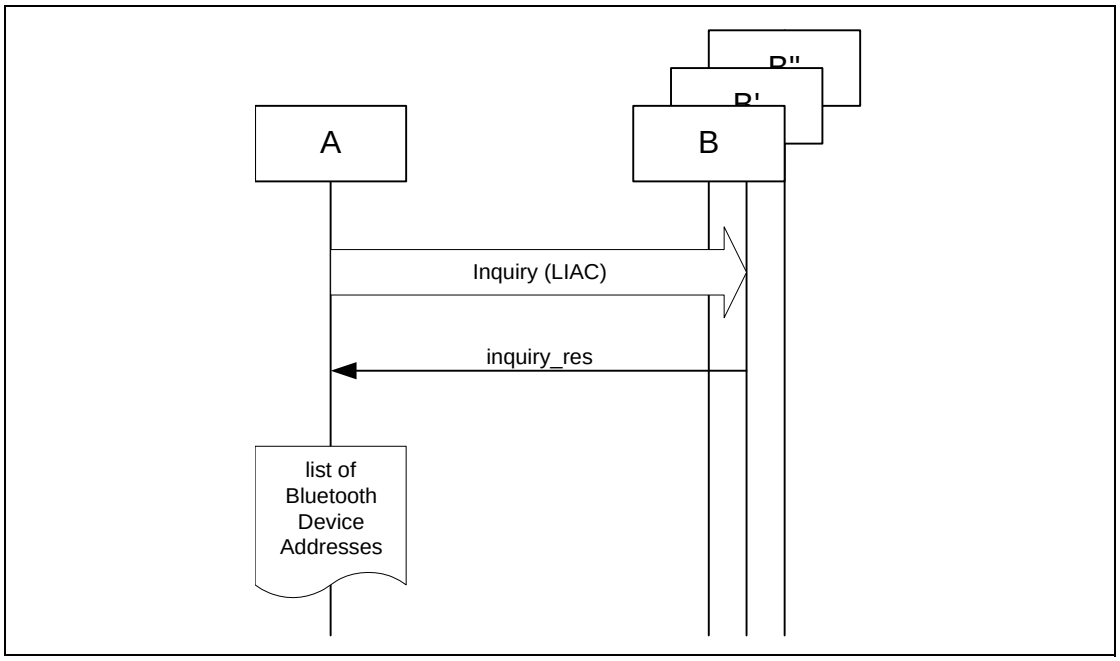

Figure 6.2: Limited inquiry where B is a device in non-discoverable mode, B' is a device in limited discoverable mode and B" is a device in general discoverable mode. (Note that only limited discoverable devices can be discovered using limited inquiry.)

6.2.4 Conditions

When limited inquiry is initiated by a Bluetooth device, the INQUIRY state shall last $T_{GAP}(100)$ or longer, unless the inquirer collects enough responses and determines to abort the INQUIRY state earlier. The Bluetooth device shall perform inquiry using the LIAC.

In order for Device A to receive inquiry responses, the remote devices in range has to be made limited discoverable.

6.3 NAME DISCOVERY

6.3.1 Purpose

The purpose of name discovery is to provide the initiator with the Bluetooth Device Name of connectable devices (i.e. devices in range that will respond to paging).

6.3.2 Term on UI level

'Bluetooth Device Name Discovery'.

6.3.3 Description

6.3.3.1 Name request

Name request is the procedure for retrieving the Bluetooth Device Name from a connectable Bluetooth device. It is not necessary to perform the full link establishment procedure (see Section 7.1 on page 309) in order to just to get the name of another device.

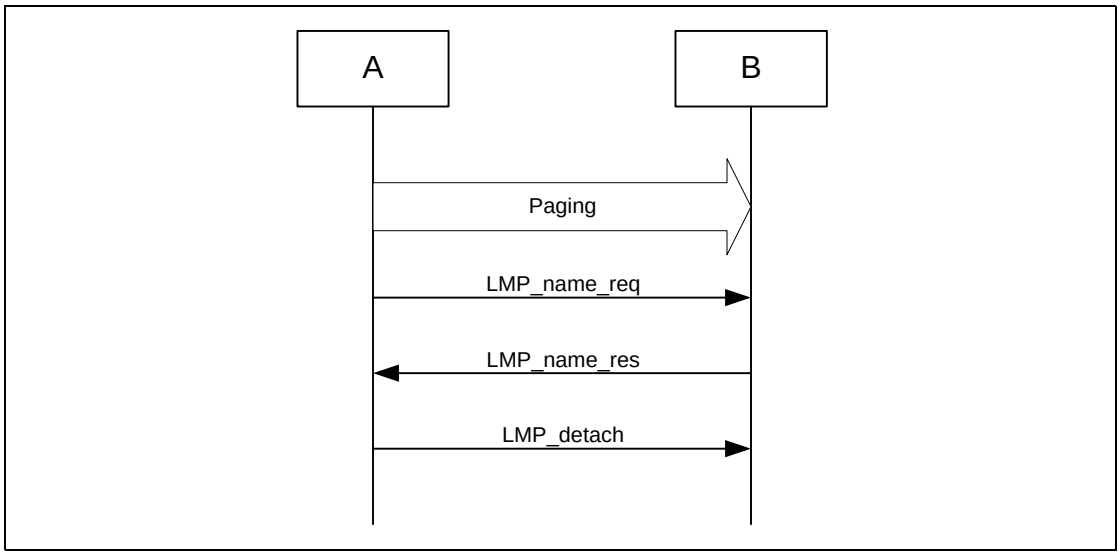

Figure 6.3: Name request procedure.

6.3.3.2 Name discovery

Name discovery is the procedure for retrieving the Bluetooth Device Name from connectable Bluetooth devices by performing name request towards known devices (i.e. Bluetooth devices for which the Bluetooth Device Addresses are available).

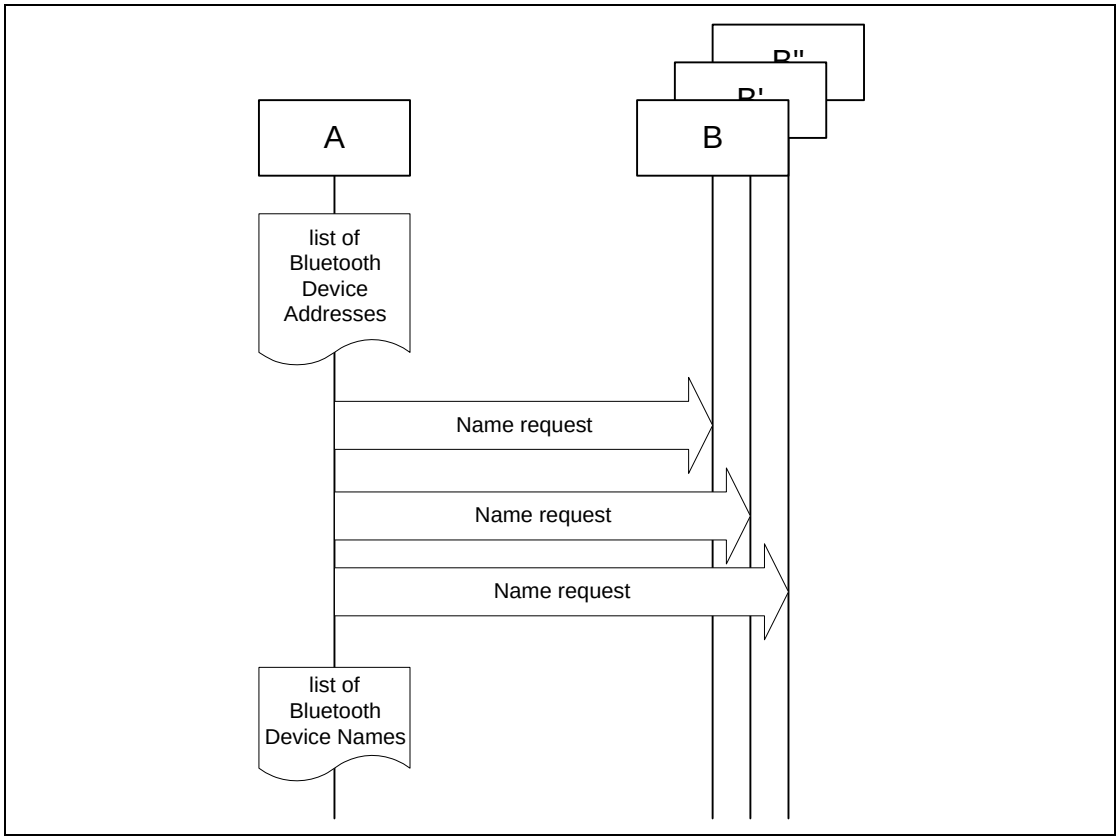

Figure 6.4: Name discovery procedure.

6.3.4 Conditions

In the name request procedure, the initiator will use the Device Access Code of the remote device as retrieved immediately beforehand – normally through an inquiry procedure.

6.4 DEVICE DISCOVERY

6.4.1 Purpose

The purpose of device discovery is to provide the initiator with the Bluetooth Device Address, clock, Class of Device, used page scan mode Bluetooth Device Name, and extended inquiry response information of discoverable devices.

6.4.2 Term on UI level

'Bluetooth Device Discovery'.

6.4.3 Description

During the device discovery procedure, first an inquiry (either general or limited) is performed, and then name discovery is done towards some or all of the devices that responded to the inquiry. If the initiator of the device discovery receives a complete local name or a shortened local name that is considered long enough, via an extended inquiry response from a remote device, the initiator should not do a separate name discovery for that device.

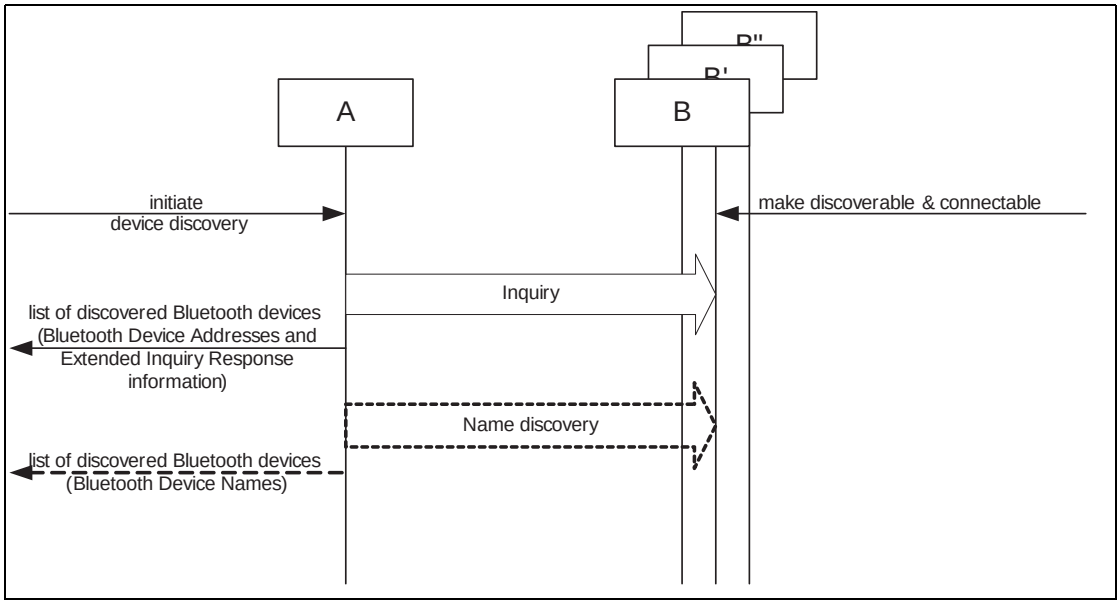

Figure 6.5: Device discovery procedure.

6.4.4 Conditions

Conditions for both inquiry (general or limited) and name discovery must be fulfilled (i.e. devices discovered during device discovery must be both discoverable and connectable).

6.5 BONDING

6.5.1 Purpose

The purpose of bonding is to create a relation between two Bluetooth devices based on a common link key (a bond). The link key is created and exchanged (pairing) during the bonding procedure and is expected to be stored by both Bluetooth devices, to be used for future authentication. In addition to pairing, the bonding procedure can involve higher layer initialization procedures.

6.5.2 Term on UI level

’Bluetooth Bonding

6.5.3 Description

Two forms of bonding are described in the following sections: General Bonding and Dedicated Bonding.

6.5.3.1 General Bonding

General Bonding refers to the process of performing bonding during connection setup or channel establishment procedures as a precursor to accessing a service.

When the devices that are performing General Bonding both support Secure Simple Pairing, the Authentication_Requirements parameter should be set to MITM Protection Not Required – General Bonding unless the security policy of an available local service requires MITM Protection in which case the Authentication_Requirements parameter shall be set to MITM Protection Required – General Bonding. 'No bonding' is used when the device is performing a Secure Simple Pairing procedure, but does not intend to retain the link key after the physical link is disconnected.

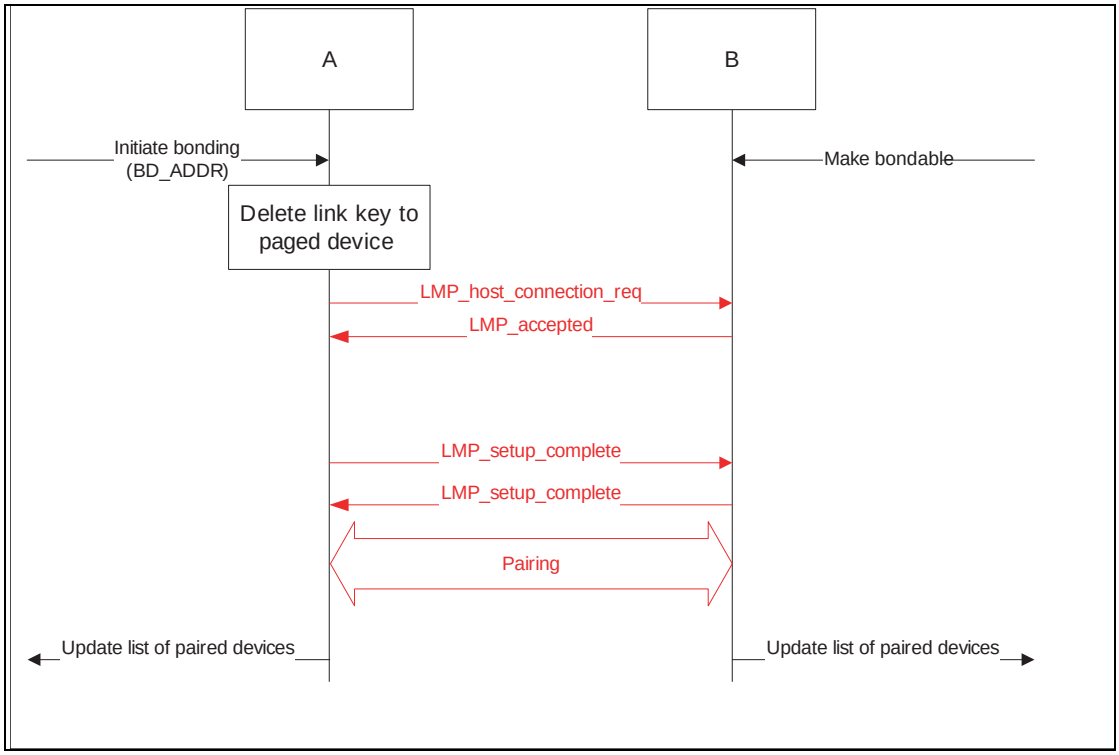

Figure 6.6: General description of general bonding as being the link establishment procedure executed under specific conditions on both devices, followed by authentication and an optional higher layer initalization process.

6.5.3.2 Dedicated Bonding

Dedicated Bonding refers to a procedure wherein one device connects to another only for the purpose of pairing without accessing a particular service.

The main difference with dedicated bonding, as compared to a pairing done during link or channel establishment, is that for bonding it is the paging device (A) that must initiate the authentication.

When the devices that are performing Dedicated Bonding both support Secure Simple Pairing, the Authentication_Requirements parameter should be set to *MITM Protection Not Required – Dedicated Bonding* unless the security policy of an available local service requires MITM Protection in which case the Authentication Required parameter shall be set to *MITM Protection Required – Dedicated Bonding*. 'No bonding' is used when the device is performing a Secure Simple Pairing procedure, but does not intend to retain the link key after the physical link is disconnected.

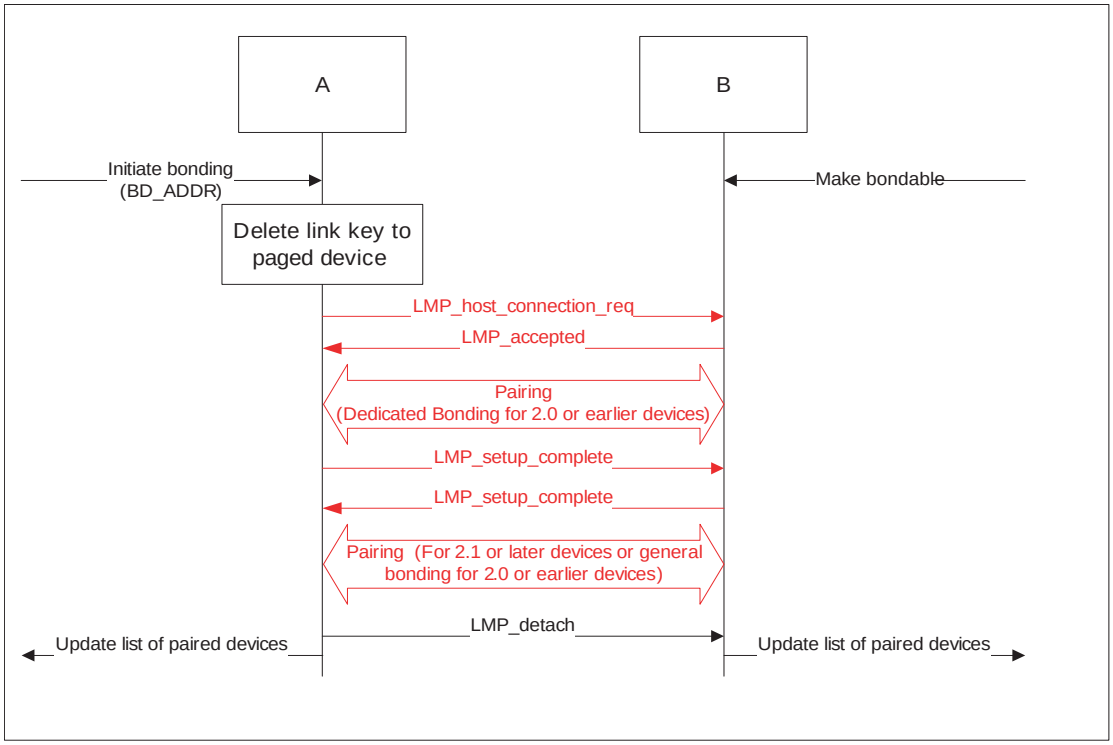

Figure 6.7: Dedicated Bonding as performed when the purpose of the procedure is only to create and exchange a link key between two Bluetooth devices.

6.5.4 Conditions

Before bonding can be initiated, the initiating device (A) must know the Device Access Code of the device to pair with. This is normally done by first performing device discovery. A Bluetooth Device that can initiate bonding (A) should use limited inquiry, and a Bluetooth Device that accepts bonding (B) should support the limited discoverable mode.

Bonding is in principle the same as link establishment with the conditions:

- The paged device (B) shall be set into bondable mode. The paging device (A) is assumed to allow pairing since it has initiated the bonding procedure.

- The paging device (the initiator of the bonding procedure, A) shall initiate authentication.
- Before initiating the authentication part of the bonding procedure, the paging device should delete any link key corresponding to a previous bonding with the paged device.

7 ESTABLISHMENT PROCEDURES

	Procedure	Ref.	Support in A	Support in B
1	Link establishment	7.1	M	M
2	Channel establishment	7.2	O	M
3	Connection establishment	7.3	O	O

Table 7.1: Establishment procedures

The establishment procedures defined here do not include any discovery part. Before establishment procedures are initiated, the information provided during device discovery (in the FHS packet or the extended inquiry response packet of the inquiry response or in the response to a name request) has to be available in the initiating device. This information is:

- The Bluetooth Device Address (BD_ADDR) from which the Device Access Code is generated;
- The system clock of the remote device;
- The page scan mode used by the remote device.

Additional information provided during device discovery that is useful for making the decision to initiate an establishment procedure is:

- The Class of device;
- The Device name;
- The supported Service Classes.

7.1 LINK ESTABLISHMENT

7.1.1 Purpose

The purpose of the link establishment procedure is to establish a physical link (of ACL type) between two Bluetooth devices using procedures from [2] and [3].

7.1.2 Term on UI level

'Bluetooth link establishment'

7.1.3 Description

In this sub-section, the paging device (A) is in security mode 3.During link establishment, the paging device cannot during link establishment distinguish if the paged device (B) is in security mode 1, 2 or 4.

7.1.3.1 B in security mode 1, 2, or 4

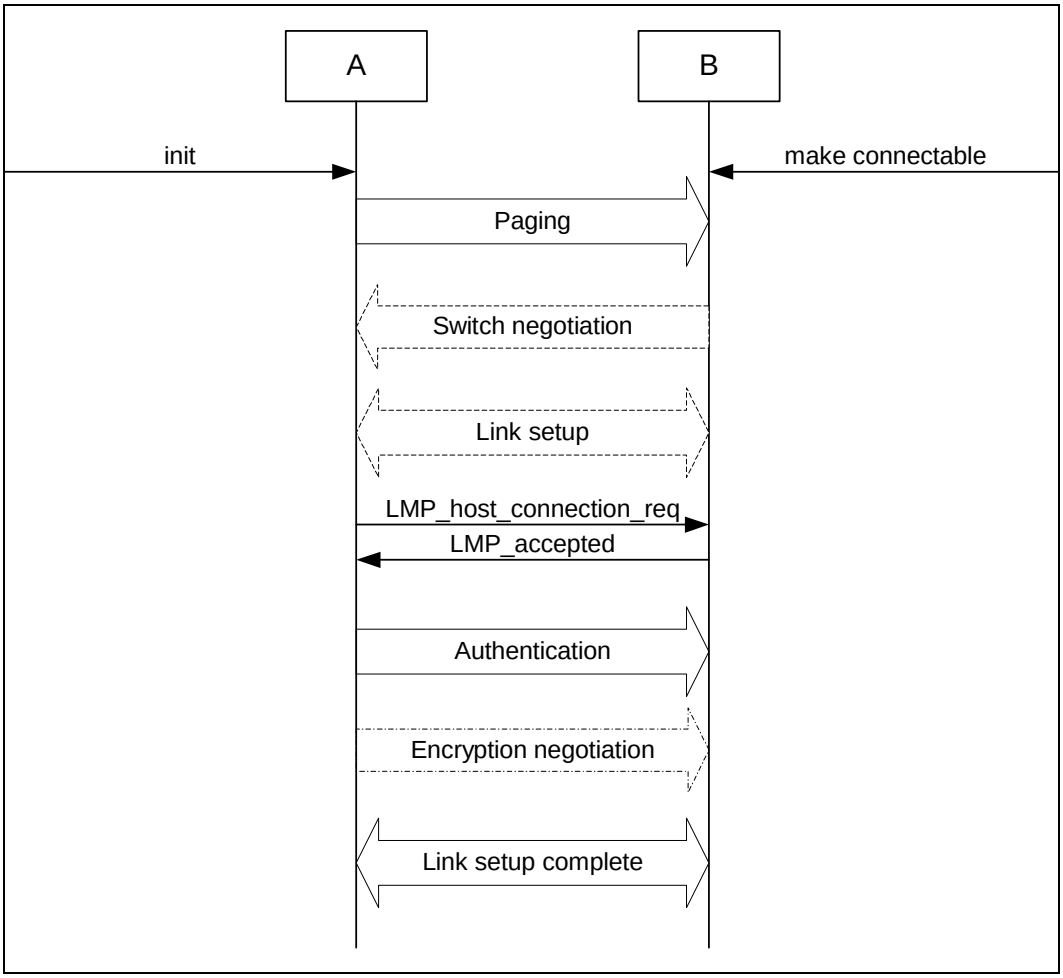

Figure 7.1: Link establishment procedure when the paging device (A) is in security mode 3 and the paged device (B) is in security mode 1, 2, or 4.

7.1.3.2 B in security mode 3

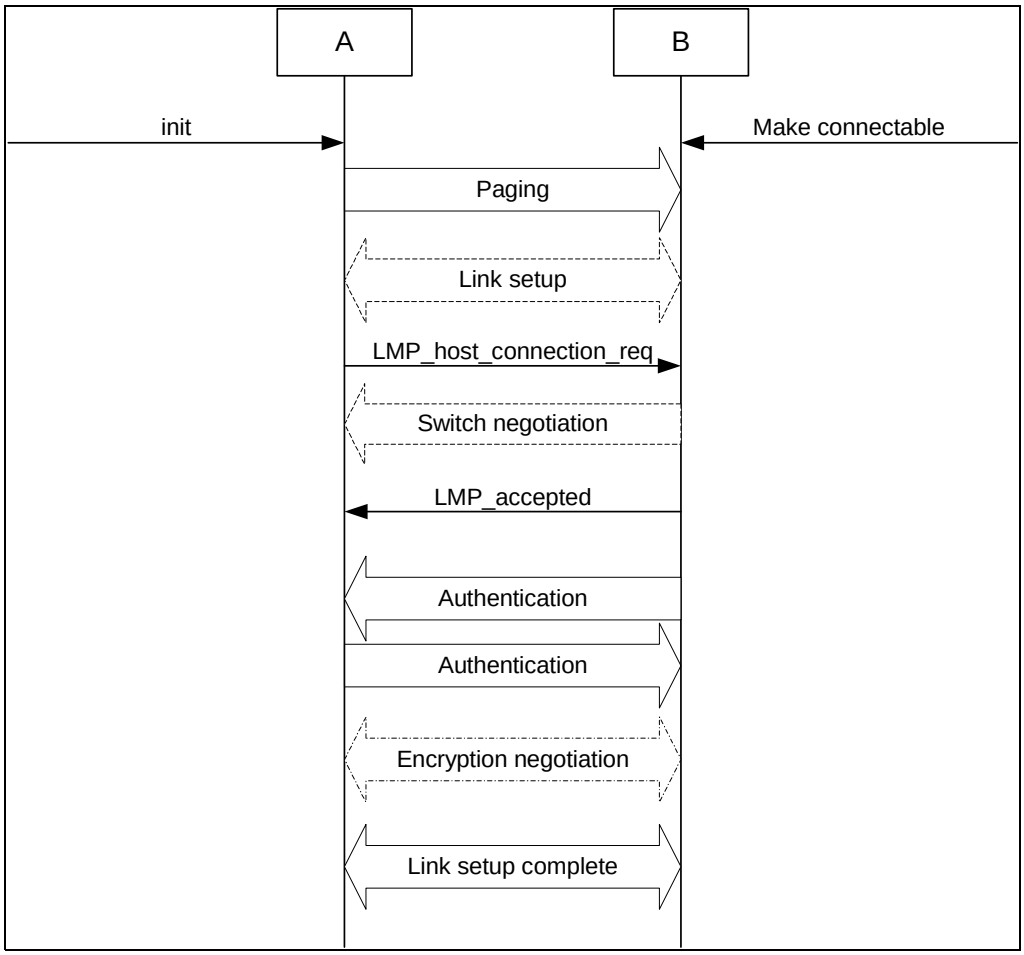

Figure 7.2: Link establishment procedure when both the paging device (A) and the paged device (B) are in security mode 3.

7.1.4 Conditions

The paging procedure shall be according to [2] and the paging device should use the Device Access Code and page mode received through a previous inquiry. When paging is completed, a physical link between the two Bluetooth devices is established.

If role switching is needed (normally it is the paged device that has an interest in changing the master/slave roles) it should be done as early as possible after the physical link is established. If the paging device does not accept the switch, the paged device has to consider whether to keep the physical link or not.

Both devices may perform link setup (using LMP procedures that require no interaction with the host on the remote side). Optional LMP features can be used after having confirmed (using LMP_feature_req) that the other device supports the feature.

When the paging device needs to go beyond the link setup phase, it issues a request to be connected to the host of the remote device. If the paged device is in security mode 3, this is the trigger for initiating authentication.

The paging device shall send LMP_host_connection_req during link establishment (i.e. before channel establishment) and may initiate authentication only after having sent LMP_host_connection_request.

After an authentication has been performed, any of the devices can initiate encryption.

Further link configuration may take place after the LMP_host_connection_req. When both devices are satisfied, they send LMP_setup_complete.

Link establishment is completed when both devices have sent LMP_setup_complete.

7.2 CHANNEL ESTABLISHMENT

7.2.1 Purpose

The purpose of the channel establishment procedure is to establish a Bluetooth channel (L2CAP channel) between two Bluetooth devices using [2].

7.2.2 Term on UI level

'Bluetooth channel establishment'.

7.2.3 Description

In this sub-section, the initiator (A) is in security mode 3. During channel establishment, the initiator cannot distinguish if the acceptor (B) is in security mode 1 or 3.

7.2.3.1 B in security mode 2 or 4

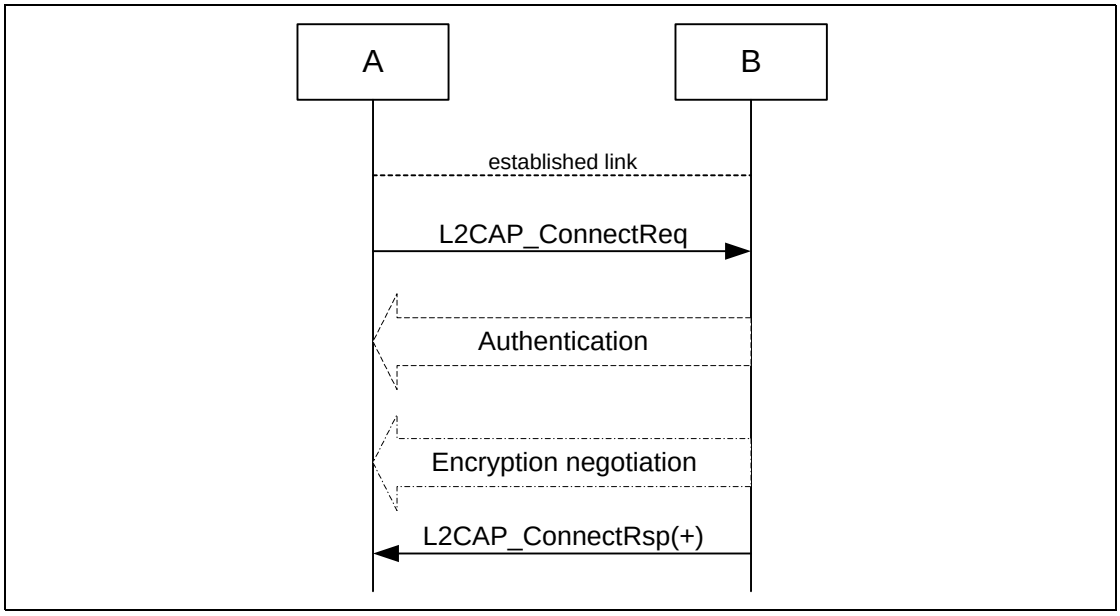

Figure 7.3: Channel establishment procedure when the initiator (A) is in security mode 3 and the acceptor (B) is in security mode 2 or 4.

7.2.3.2 B in security mode 1 or 3

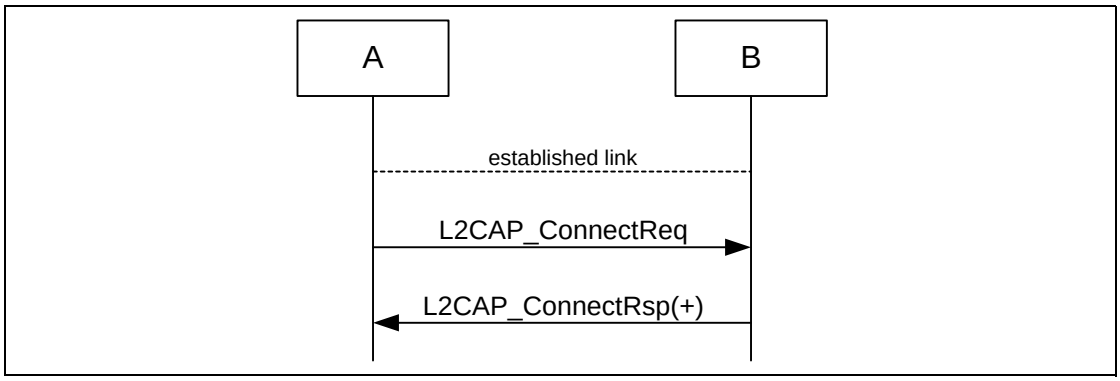

Figure 7.4: Channel establishment procedure when the initiator (A) is in security mode 3 and the acceptor (B) is in security mode 1 or 3.

7.2.4 Conditions

Channel establishment starts after link establishment is completed when the initiator sends a channel establishment request (L2CAP_ConnectReq).

Depending on security mode, security procedures may take place after the channel establishment has been initiated.

Channel establishment is completed when the acceptor responds to the channel establishment request (with a positive L2CAP_ConnectRsp).

7.3 CONNECTION ESTABLISHMENT

7.3.1 Purpose

The purpose of the connection establishment procedure is to establish a connection between applications on two Bluetooth devices.

7.3.2 Term on UI level

'Bluetooth connection establishment'

7.3.3 Description

In this sub-section, the initiator (A) is in security mode 3. During connection establishment, the initiator cannot distinguish if the acceptor (B) is in security mode 1 or 3.

7.3.3.1 B in security mode 2 or 4

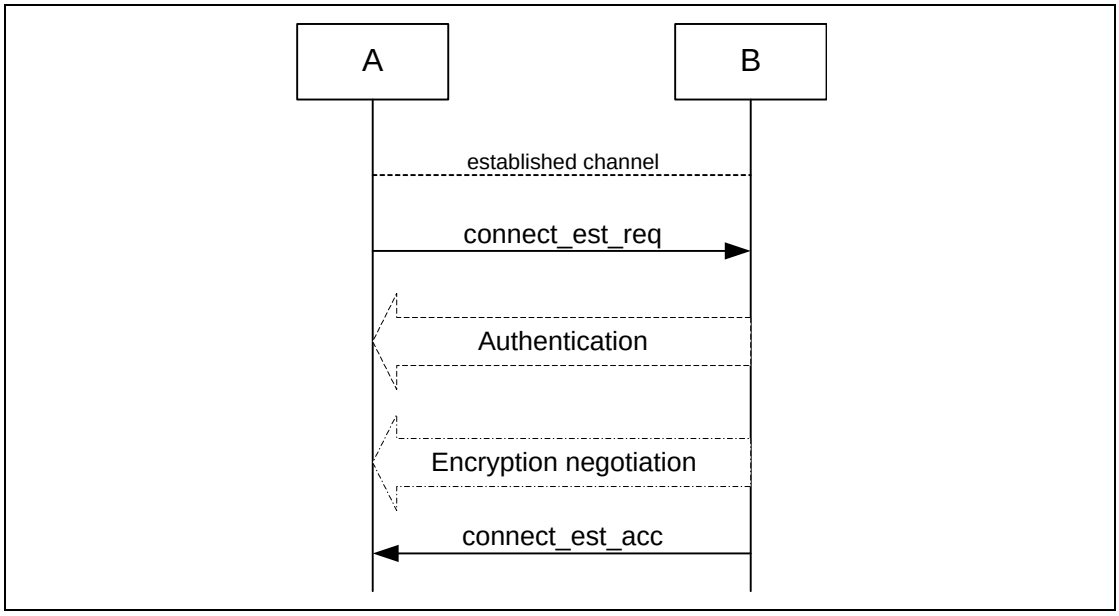

Figure 7.5: Connection establishment procedure when the initiator (A) is in security mode 3 and the acceptor (B) is in security mode 2 or 4

7.3.3.2 B in security mode 1 or 3

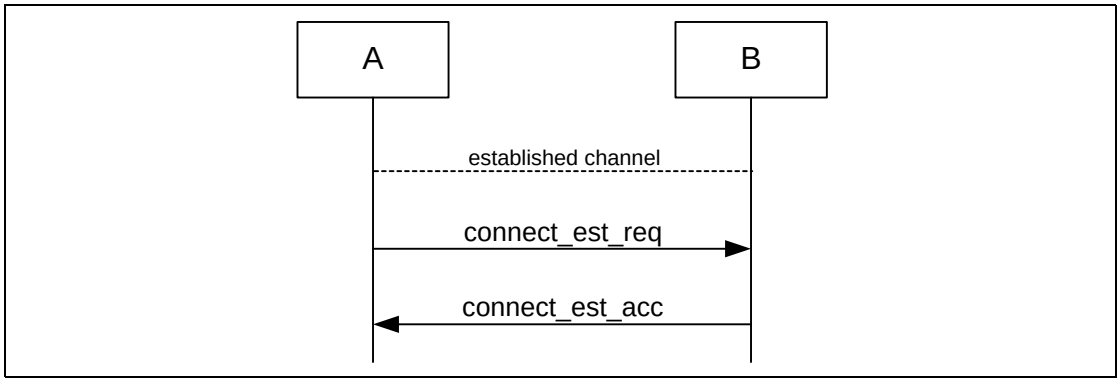

Figure 7.6: Connection establishment procedure when the initiator (A) is in security mode 3 and the acceptor (B) is in security mode 1 or 3.

7.3.4 Conditions

Connection establishment starts after channel establishment is completed, when the initiator sends a connection establishment request (’connect_est_req’ is application protocol-dependent). This request may be a TCS SETUP message [6] in the case of a Bluetooth telephony application Cordless Telephony Profile, or initialization of RFCOMM and establishment of DLC [5] in the case of a serial port-based application Serial Port Profile (although neither TCS or RFCOMM use the term ’connection’ for this).

Connection establishment is completed when the acceptor accepts the connection establishment request (’connect_est_acc’ is application protocol dependent).

7.4 ESTABLISHMENT OF ADDITIONAL CONNECTION

When a Bluetooth device has established one connection with another Bluetooth device, it may be available for establishment of:

- A second connection on the same channel, and/or
- A second channel on the same logical link, and/or
- A second physical link.

If the new establishment procedure is to be towards the same device, the security part of the establishment depends on the security modes used. If the new establishment procedure is to be towards a new remote device, the device should behave according to active modes independent of the fact that it already has another physical link established (unless allowed co-incident radio and baseband events have to be handled).

8 EXTENDED INQUIRY RESPONSE DATA FORMAT

The extended inquiry response data format is shown in Figure 8.1. The data is 240 octets and consists of a significant part and a non-significant part. The significant part contains a sequence of data structures. Each data structure shall have a length field of one octet, which contains the Length value, and a data field of Length octets. The first n octets of the data field contain the extended inquiry response (EIR) data type. The content of the remaining Length - n octets in the data field depends on the value of the EIR data type and is called the EIR data. The non-significant part extends the extended inquiry response to 240 octets and shall contain all-zero octets.

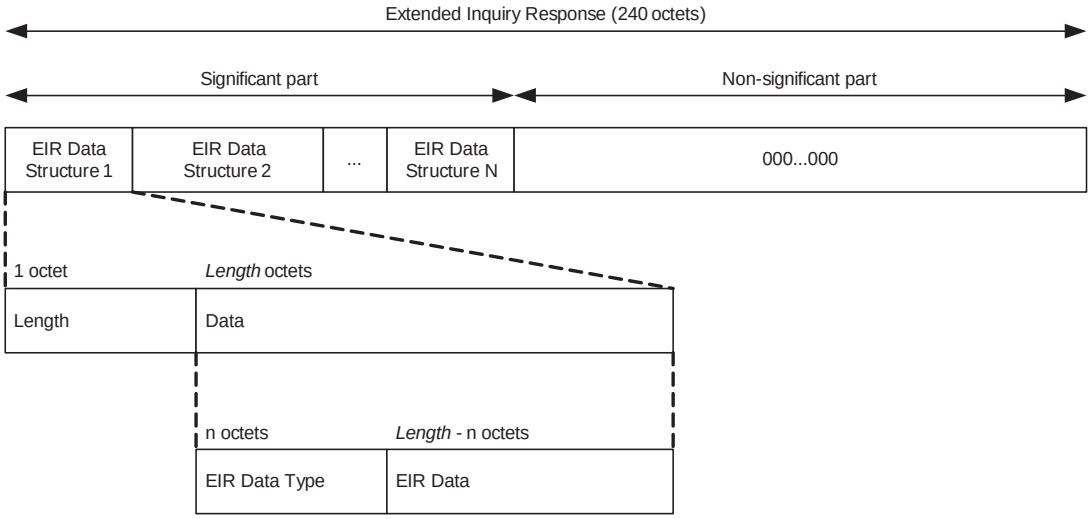

Figure 8.1: Extended Inquiry Response data format

[1] The extended inquiry response data types are specified in the Assigned Numbers document.

If the length field is set to zero, then the data field has zero octets. This shall only occur to allow an early termination of the tagged data.

To reduce interference, the host should try to minimize the amount of EIR data such that the baseband can use a 1-slot or 3-slot EIR packet. This is advantageous because it reduces interference and maximizes the probability that the EIR packet will be received. If applications on a host provide more than 240 bytes of extended inquiry response data, it is up to the host to limit it to 240 octets.

The EIR data shall always be sent during inquiry response state. EIR data can contain device name, Tx power level, service class UUIDs, as well as manufacturers data, as defined in Section 8.1. In selecting the packet type to be used, FEC (DM1 or DM3) should be considered to maximize the range.

The Host shall include the device name in the EIR data according to the following rules:

1. If the device does not have a device name (i.e. 0 octet) and
    a) There is no other data to be sent in the EIR then host shall send a name tag with zero length and the type field set to indicate that this is the complete name (i.e. total of 2 octets with length = 1)
    b) There is other important data to be sent in the EIR packet and a zero octet name tag will not fit, then host may avoid sending the name tag.
2. If the device has a device name (greater than 0 octet) and
    a) It is too long be included in the EIR packet (given the choice of packet type and any other data that is being sent) then host may send a shorted version of the name (even 0 octet) and shall mark the name as 'shortened' to inform the receiver that a remote name request is required obtain the full name if the name is needed
    b) There are no other data to be sent in the EIR packet (given the choice of packet type selected) then host shall maximise the length of the device name to be sent, this may be complete or shortened name (e.g. if DM1 packet is chosen and device name characters equates to greater than 15 octets, then host sends first few characters that equates to 15 octets or less with shortened flag)

Note: It is not necessary to understand each and every EIR data type. If a host does not understand a given EIR data type value it should just skip over Length octets and look for the next EIR data structure.

8.1 EIR DATA TYPE DEFINITIONS

This section defines the basic EIR data types. Additional EIR data types may be defined in profile specifications.

All EIR data type values are listed in the Bluetooth Assigned Numbers document.

All numerical multi-byte entities and values associated with the following data types shall use little-endian byte order.

8.1.1 Service Class UUIDs

A list of service class UUIDs (see Section 2.4, “Service Class,” on page 207) may be included in the extended inquiry response data packet. There are three types of UUIDs that may be returned: 16-bit Bluetooth UUIDs, 32-bit Bluetooth UUIDs, and global 128-bit UUIDs. Each size is assigned two data type values. In addition to the size, the data type values also indicate if the list of UUIDs is complete or there are more UUIDs available via SDP. An extended inquiry

response shall not contain more than one list for each size of UUIDs. If a device has no service class UUIDs of a certain size the corresponding field in the extended inquiry response shall be marked as complete with no service class UUIDs. An omitted service class UUID list shall be interpreted as an empty incomplete list.

Value	Description	
0x02/0x03	16-bit Service Class UUIDs	0x02 = More 16-bit UUIDs available
		0x03 = Complete list of 16-bit UUIDs
0x04/0x05	32-bit Service Class UUIDs	0x04 = More 32-bit UUIDs available
		0x05 = Complete list of 32-bit UUIDs
0x06/0x07	128-bit Service Class UUIDs	0x06 = More 128-bit UUIDs available
		0x07 = Complete list of 128-bit UUIDs

8.1.2 Local Name

When included in the extended inquiry response, this shall be the same as, or a shortened version of, the local name assigned to the device. The data type value indicates if the name is complete or shortened. If the name is shortened, the complete name can be read using the remote name request procedure. An extended inquiry response shall not contain more than one instance of this data type.

Value	Description	
0x08/0x09	**Local Name**	**0x08 = Shortened local name**
		0x09 = Complete local name

8.1.3 Flags

This data type is allocated for flag bits. These can for example be used for boolean information that would otherwise require a whole byte (not counting the Length and Data Type fields). The flag bits shall be included in the extended inquiry response if any of the bits are non-zero. If all flag bits are zero they may be omitted. An extended inquiry response shall not contain more than one instance of this data type.

Note: The Flags field can be zero or more octets long. This allows the Flags field to be extended while using the minimum number of octets within the data packet. Whole octets that are 0x00 are not transmitted as long as all other octets after that octet are also 0x00.

No flag bits are currently defined.

Value	Description
0x01	Flags

8.1.4 Manufacturer Specific Data

This data type is used for manufacturer specific data. The first two data octets shall contain a company identifier code from the Assigned Numbers - Company Identifiers document. The interpretation of any other octets within the data shall be defined by the manufacturer specified by the company identifier.

Value	Description
0xFF	Manufacturer Specific Data

8.1.5 TX Power Level

The TX Power Level tag indicates the transmitted power level of the EIR packet.

Value	Description
0x0A	TX Power Level (1 byte) 0xXX:-127 to +127dBm Note: when the TX Power Level tag is not present, the TX power level of the EIR packet is unknown.

The TX Power Level tag may be used to calculate path loss on a received EIR packet using the following equation:

pathloss = Tx Power Level – EIR_RSSI

For example, if Tx Power Level = +4 (dBm) and the RSSI on the EIR packet is -60 (dBm) then the total pathloss is +4 – (-60) = +64 dB. If a second EIR packet were received at -40dBm with a Tx Power Level tag = +15dBm the resulting pathloss would be +55dB. An application could use these pathloss values to choose which device it thinks might be closer (the one with the lower pathloss value).

Unfortunately, due to fading and varying antenna, circuit, and chip characteristics, these resulting pathloss values will have uncertainty. Some of the uncertainty (for example, due to fading) may be able to be removed if multiple EIR packets are received from the same device.

8.1.6 Secure Simple Pairing Out of Band (OOB)

An out of band mechanism may be used in Secure Simple Pairing to communicate discovery information as well as other information related to the pairing

process. These tags use the standard EIR tag format. They shall only be used over an out-of-band mechanism.

Value	Descrption
NA	OOB Optional Data Length (2 bytes) 0xXXXX: 0 to 65535 bytes This field contains the length of the optional part
NA	BD_ADDR (6 bytes) Format defined in [Vol. 2, Part B] Section 1.2 on page 66

Table 8.1: Mandatory OOB Tags

Value	Desciption
0x0D	Class of Device (3 bytes) Format defined in Assigned Numbers
0x0E	Simple Pairing Hash C (16 bytes) Format defined in [Vol. 2, Part H] Section 7.2.2 on page 958
0x0F	Simple Pairing Randomizer R (16 bytes) Format defined in [Vol. 2, Part H] Section 7.2.2 on page 958

Table 8.2: Optional OOB Tags

8.2 EXAMPLE EXTENDED INQUIRY RESPONSE

This is an example extended inquiry response for a phone with PANU, Hands-free Audio Gateway, and Intercom Service:

Value	Notes
0x06	Length of this Data
0x09	Complete Local Name
0x50	'P'
0x68	'h'
0x6F	'o'
0x6E	'n'
0x65	'e'
0x07	Length of this Data
0x03	Complete list of 16-bit Service Class UUIDs
0x15	PANU service class UUID
0x11	
0x1F	Handsfree Audio Gateway service class UUID

0x11	
0x09	Cordless Telephony service class UUID
0x11	
0x01	Length of this data
0x05	Complete list of 32-bit Service Class UUIDs
0x01	Length of this data
0x07	Complete list of 128-bit Service Class UUIDs
0x00	End of Data (Not transmitted over the air)

9 DEFINITIONS

In the following, terms written with capital letters refer to states.

9.1 GENERAL DEFINITIONS

Mode . A set of directives that defines how a device will respond to certain events.

Idle . As seen from a remote device, a Bluetooth device is idle, or is in idle mode, when there is no link established between them.

Bond . A relation between two Bluetooth devices defined by creating, exchanging and storing a common link key. The bond is created through the bonding or LMP-pairing procedures.

9.2 CONNECTION-RELATED DEFINITIONS

Physical channel . A synchronized Bluetooth baseband-compliant RF hopping sequence.

Piconet . A set of Bluetooth devices sharing the same physical channel defined by the master parameters (clock and BD_ADDR).

Physical link . A Baseband-level connection[1] between two devices established using paging. A physical link comprises a sequence of transmission slots on a physical channel alternating between master and slave transmission slots.

ACL link . An asynchronous (packet-switched) connection[1] between two devices created on LMP level. Traffic on an ACL link uses ACL packets to be transmitted.

SCO link . A synchronous (circuit-switched) connection[1] for reserved bandwidth communications; e.g. voice between two devices, created on the LMP level by reserving slots periodically on a physical channel. Traffic on an SCO link uses SCO packets to be transmitted. SCO links can be established only after an ACL link has first been established.

Link . Shorthand for an ACL link.

PAGE . A baseband state where a device transmits page trains, and processes any eventual responses to the page trains.

PAGE_SCAN . A baseband state where a device listens for page trains.

1. The term ’connection’ used here is not identical to the definition below. It is used in the absence of a more concise term.

Page . The transmission by a device of page trains containing the Device Access Code of the device to which the physical link is requested.

Page scan . The listening by a device for page trains containing its own Device Access Code.

Channel . A logical connection on L2CAP level between two devices serving a single application or higher layer protocol.

Connection . A connection between two peer applications or higher layer protocols mapped onto a channel.

Connecting . A phase in the communication between devices when a connection between them is being established. (Connecting phase follows after the link establishment phase is completed.)

Connect (to service) . The establishment of a connection to a service. If not already done, this includes establishment of a physical link, link and channel as well.

9.3 DEVICE-RELATED DEFINITIONS

Discoverable device . A Bluetooth device in range that will respond to an inquiry (normally in addition to responding to page).

Silent device . A Bluetooth device appears as silent to a remote device if it does not respond to inquiries made by the remote device. A device may be silent due to being non-discoverable or due to baseband congestion while being discoverable.

Connectable device . A Bluetooth device in range that will respond to a page.

Trusted device . A paired device that is explicitly marked as trusted.

Paired device . A Bluetooth device with which a link key has been exchanged (either before connection establishment was requested or during connecting phase).

Pre-paired device . A Bluetooth device with which a link key was exchanged, and the link key is stored, before link establishment.

Un-paired device . A Bluetooth device for which there was no exchanged link key available before connection establishment was request.

Known device . A Bluetooth device for which at least the BD_ADDR is stored.

Un-known device . A Bluetooth device for which no information (BD_ADDR, link key or other) is stored.

Authenticated device . A Bluetooth device whose identity has been verified during the lifetime of the current link, based on the authentication procedure.

9.4 PROCEDURE-RELATED DEFINITIONS

Paging . A procedure for establishing a physical link of ACL type on baseband level, consisting of a page action of the initiator and a page scan action of the responding device.

Link establishment . A procedure for establishing a link on LMP level. A link is established when both devices have agreed that LMP setup is completed.

Channel establishment . A procedure for establishing a channel on L2CAP level.

Connection establishment . A procedure for creating a connection mapped onto a channel.

Creation of a trusted relationship . A procedure where the remote device is marked as a trusted device. This includes storing a common link key for future authentication and pairing (if the link key is not available).

Creation of a secure connection. A procedure of establishing a connection, including authentication and encryption.

Device discovery . A procedure for retrieving the Bluetooth device address, clock, class-of-device field and used page scan mode from discoverable devices.

Name discovery . A procedure for retrieving the user-friendly name (the Bluetooth device name) of a connectable device.

Service discovery . Procedures for querying and browsing for services offered by or through another Bluetooth device.

9.5 SECURITY-RELATED DEFINITIONS

Authentication . A generic procedure based on LMP-authentication if a link key exists or on LMP-pairing if no link key exists.

LMP-authentication . An LMP level procedure for verifying the identity of a remote device. The procedure is based on a challenge-response mechanism using a random number, a secret key and the BD_ADDR of the non-initiating device. The secret key used can be a previously exchanged link key.

Authorization . A procedure where a user of a Bluetooth device grants a specific (remote) Bluetooth device access to a specific service. Authorization implies that the identity of the remote device can be verified through authentication.

Authorize . The act of granting a specific Bluetooth device access to a specific service. It may be based upon user confirmation, or given the existence of a trusted relationship.

LMP-pairing . A procedure that authenticates two devices, based on a PIN, and subsequently creates a common link key that can be used as a basis for a trusted relationship or a (single) secure connection. The procedure consists of the steps: creation of an initialization key (based on a random number and a PIN), creation and exchange of a common link key and LMP-authentication based on the common link key.

Bonding . A dedicated procedure for performing the first authentication, where a common link key is created and stored for future use.

Trusting . The marking of a paired device as trusted. Trust marking can be done by the user, or automatically by the device (e.g. when in bondable mode) after a successful pairing.

10 APPENDIX A (NORMATIVE): TIMERS AND CONSTANTS

The following timers are required by this profile.

Timer name	Recommended value	Description	Comment
$T_{GAP}(100)$	10.24 s	Normal time span that a Bluetooth device performs inquiry.	Used during inquiry and device discovery.
$T_{GAP}(101)$	10.625 ms	Minimum time in INQUIRY_SCAN.	A discoverable Bluetooth device enters INQUIRY_SCAN for at least $T_{GAP}(101)$ every $T_{GAP}(102)$.
$T_{GAP}(102)$	2.56 s	Maximum time between repeated INQUIRY_SCAN enterings.	Maximum value of the inquiry scan interval, $T_{inquiry\ scan}$.
$T_{GAP}(103)$	30.72 s	A Bluetooth device shall not be in a discoverable mode less than $T_{GAP}(103)$.	Minimum time to be discoverable.
$T_{GAP}(104)$	1 min.	A Bluetooth device should not be in limited discover-able mode more than $T_{GAP}(104)$.	Recommended upper limit.
$T_{GAP}(105)$	100ms	Maximum time between INQUIRY_SCAN enterings	Recommended value
$T_{GAP}(106)$	100ms	Maximum time between PAGE_SCAN enterings	Recommended value
$T_{GAP}(107)$	1.28s	Maximum time between PAGE_SCAN enterings (R1 page scan)	Recommended value
$T_{GAP}(108)$	2.56s	Maximum time between PAGE_SCAN enterings (R2 page scan)	Recommended value

Table 10.1: Defined GAP timers

11 APPENDIX B (INFORMATIVE): INFORMATION FLOWS OF RELATED PROCEDURES

11.1 LMP-AUTHENTICATION

The specification of authentication on link level is found in [3].

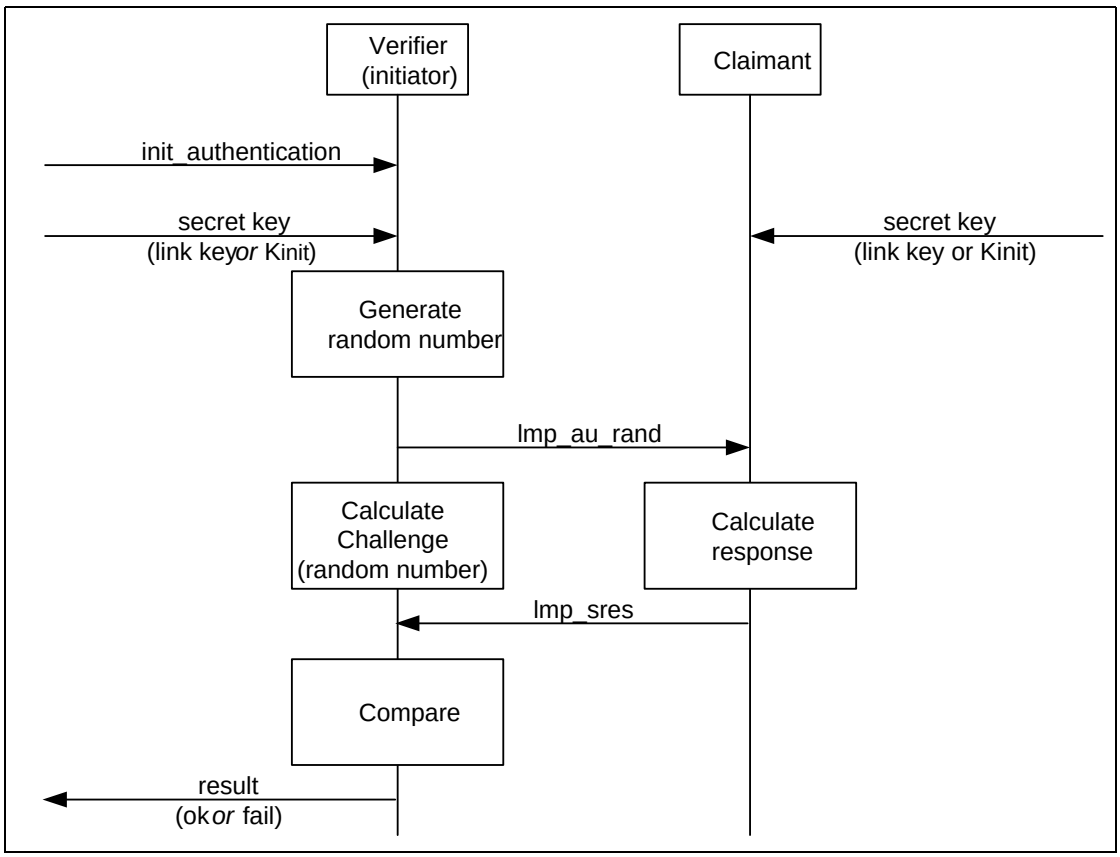

Figure 11.1: LMP-authentication as defined by [3].

The secret key used here is an already exchanged link key.

11.2 LMP-PAIRING

The specification of pairing on link level is found in [3].

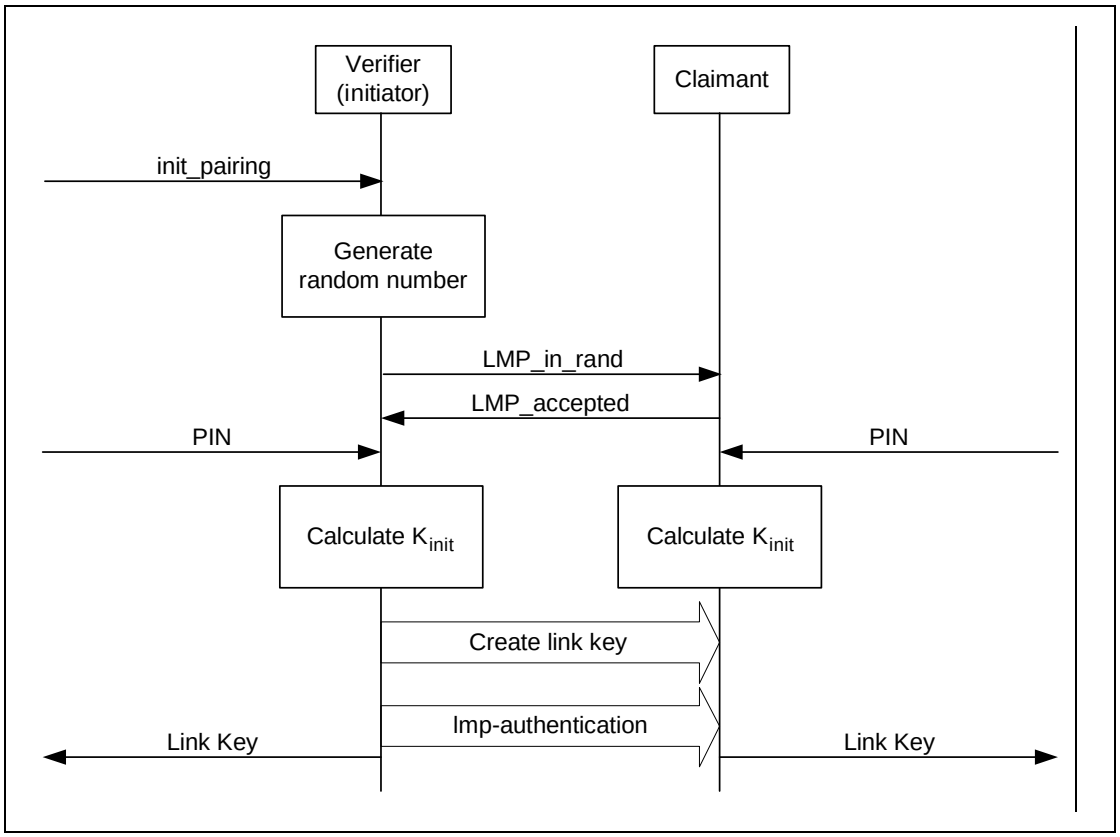

Figure 11.2: LMP-pairing as defined in [3].

The PIN used here is PN_{BB}.

The create link key procedure is described in [Vol. 2, Part C] Section 4.2.2.4 on page 248 and [Vol. 2, Part H] Section 3.2 on page 927. In case the link key is based on a combination key, a mutual authentication takes place and shall be performed irrespective of current security mode.

11.3 SERVICE DISCOVERY

The Service Discovery Protocol [7] specifies what PDUs are used over-the-air to inquire about services and service attributes. The procedures for discovery of supported services and capabilities using the Service Discovery Protocol are described in the Service Discovery Application Profile. This is just an example.

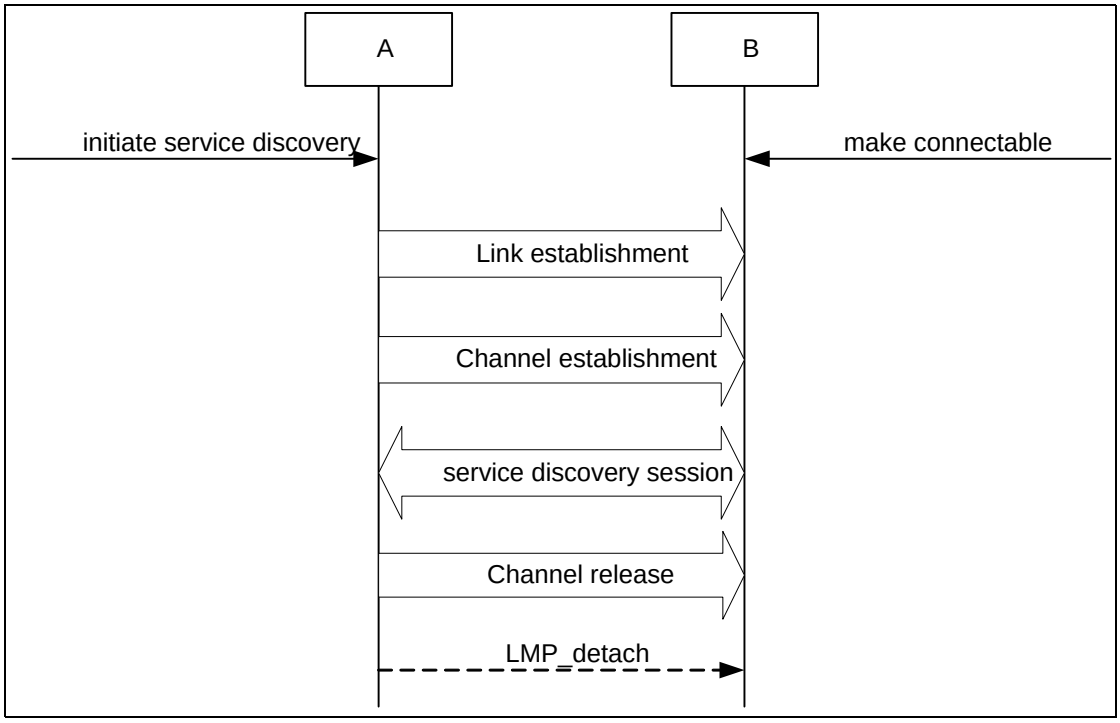

Figure 11.3: Service discovery procedure.

12 REFERENCES

[2] Baseband Specification

[3] Link Manager Protocol

[4] Logical Link Control and Adaptation Protocol

[5] RFCOMM

[6] Telephony Control Specification

[7] Service Discovery Protocol

[8] Service Discovery Application Profile

[9] Cordless Telephony Profile

[10] Serial Port Profile

[11] Security Architecture (white paper)

[12] Bluetooth Assigned Numbers

Core System Package [Host volume]
Part D

TEST SUPPORT

CONTENTS

1 Test Methodology 335
1.1 BR/EDR Test Scenarios 335
1.1.1 Test setup 335
1.1.2 Transmitter Test 336
1.1.2.1 Packet Format 337
1.1.2.2 Pseudorandom Sequence 338
1.1.2.3 Control of Transmit Parameters 338
1.1.2.4 Power Control 339
1.1.2.5 Switch Between Different Frequency Settings 339
1.1.2.6 Adaptive Frequency Hopping 340
1.1.3 LoopBack test 340
1.1.4 Pause test 344
1.2 AMP Test Scenarios 345
1.2.1 Methodology Overview 345
1.2.1.1 Initiation Example Description 346
1.2.2 Control and Configuration 346
1.2.3 AMP Test Manager 347
1.2.4 Test Commands/Events Format 348
1.2.5 AMP Test Manager Commands/Events 349
1.2.5.1 AMP Command Rejected Event 350
1.2.5.2 AMP Discover Request 351
1.2.5.3 AMP Discover Response Event 351
1.2.5.4 AMP Read PHY Capability Bit Map Command 352
1.2.5.5 AMP Read PHY Capability Bit Map Response Event 353
1.3 References 353

2 Test Control Interface (TCI) 354
2.1 Introduction 354
2.1.1 Terms used 354
2.1.2 Usage of the Interface 354
2.2 TCI Configurations 355
2.2.1 Bluetooth RF requirements 355
2.2.1.1 Required interfaces 355
2.2.2 Bluetooth protocol requirements 356
2.2.2.1 Required interfaces 356
2.2.3 Bluetooth profile requirements 357
2.2.3.1 Required interfaces 357

2.3 TCI Configuration and Usage 358
2.3.1 Transport layers 358
2.3.1.1 Physical bearer 358
2.3.1.2 Software bearer 358
2.3.2 Baseband and link manager qualification 359
2.3.3 HCI qualification 361

1 TEST METHODOLOGY

This section describes the test modes for hardware and low-level functionality tests of Bluetooth devices.

The BR/EDR test mode supports testing of the Bluetooth transmitter and receiver including transmitter tests (packets with constant bit patterns) and loopback tests. It is intended mainly for certification/compliance testing of the radio and baseband layer, and may also be used for regulatory approval or in-production and after-sales testing.

For AMP, this section describes the AMP test mode for hardware and low-level functionality tests of Bluetooth AMP devices. The AMP test mode provides the ability to control an AMP device using HCI Commands for both MAC conformance testing and PHY transmitter and receiver tests utilising the BR/EDR connection. The AMP test mode is intended mainly for certification/compliance testing of the MAC and PHY and may also be used for regulatory approval or in production and after sales testing.

1.1 BR/EDR TEST SCENARIOS

A device in BR/EDR test mode shall not support normal operation. For security reasons the BR/EDR test mode is designed such that it offers no benefit to the user. Therefore, no data output or acceptance on a HW or SW interface shall be allowed.

1.1.1 Test setup

The setup consists of a device under test (DUT) and a tester. Optionally, additional measurement equipment may be used.

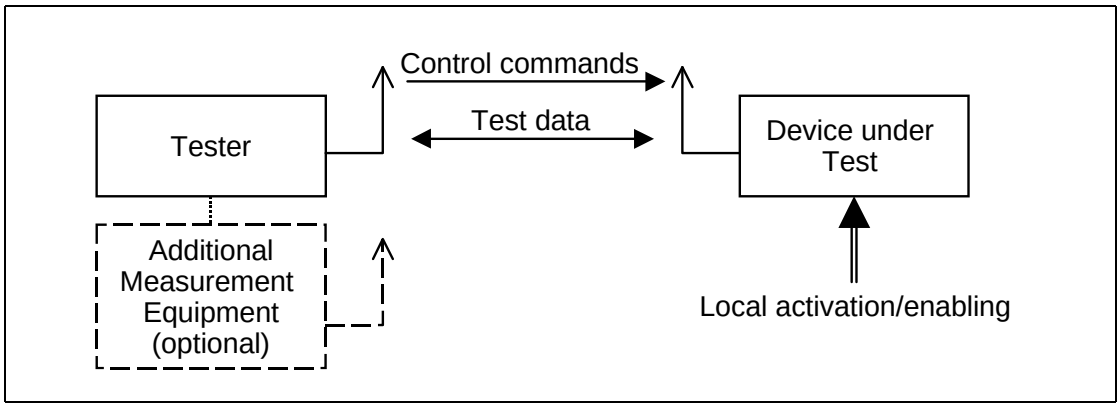

Figure 1.1: Setup for Test Mode

Tester and DUT form a piconet where the tester acts as master and has full control over the test procedure. The DUT acts as slave.

The control is done via the air interface using LMP commands (see [Vol. 2, Part C] Section 4.7.3 on page 303). Hardware interfaces to the DUT may exist, but are not subject to standardization.

The test mode is a special state of the Bluetooth model. For security and type approval reasons, a Bluetooth device in test mode shall not support normal operation. When the DUT leaves the test mode it enters the standby state. After power-off the Bluetooth device shall return to standby state.

1.1.2 Transmitter Test

The Bluetooth device transmits a constant bit pattern. This pattern is transmitted periodically with packets aligned to the slave TX timing of the piconet formed by tester and DUT. The same test packet is repeated for each transmission.

The transmitter test is started when the master sends the first POLL packet. In non-hopping mode agreed frequency is used for this POLL packet.

The tester (master) transmits control or POLL packets in the master-to-slave transmission slots. The DUT (slave) shall transmit packets in the following slave-to-master transmission slot. The tester's polling interval is fixed and defined by the LMP_test_control PDU. The device under test may transmit its burst according to the normal timing even if no packet from the tester was received. In this case, the ARQN bit is shall be set to NAK.

The burst length may exceed the length of a one slot packet. In this case the tester may take the next free master TX slot for polling. The timing is illustrated in Figure 1.2.

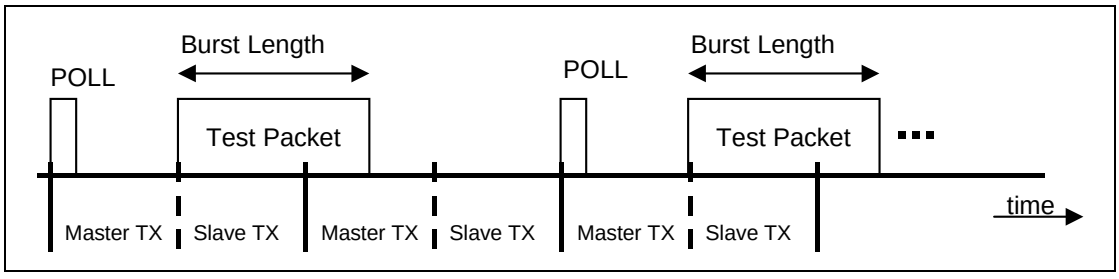

Figure 1.2: Timing for Transmitter Test

1.1.2.1 Packet Format

The test packet is a normal Bluetooth packet, see Figure 1.3. For the payload itself see below.

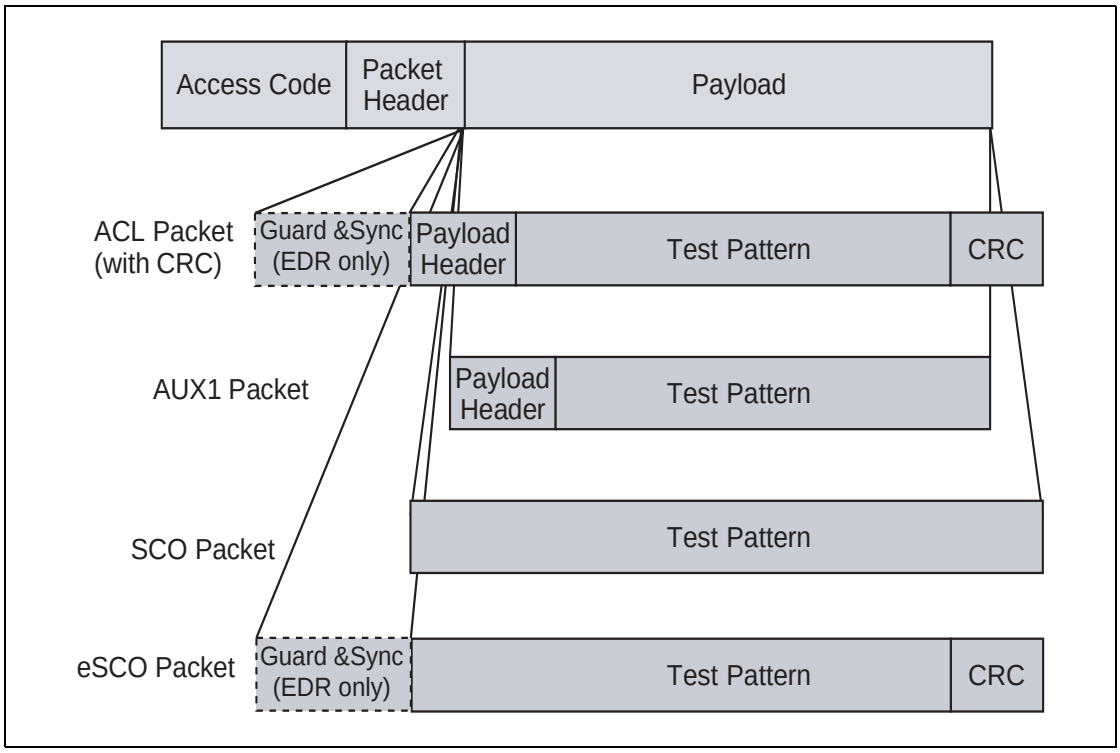

Figure 1.3: General Format of TX Packet

During configuration the tester defines:

- the packet type to be used
- payload length

For the payload length, the restrictions from the baseband specification shall apply (see “Baseband Specification” on page 57[vol. 2]). In case of ACL, SCO and eSCO packets the payload structure defined in the baseband specification is preserved as well, see Figure 1.3 on page 337.

For the transmitter test mode, only packets without FEC should be used; i.e. HV3, EV3, EV5, DH1, DH3, DH5, 2-EV3, 2-EV5, 3-EV3, 3-EV5, 2-DH1, 2-DH3, 2-DH5, 3-DH1, 3-DH3, 3-DH5 and AUX1 packets.

In transmitter test mode, the packets exchanged between the tester and the DUT shall not be scrambled with the whitening sequence. Whitening shall be turned off when the DUT has accepted to enter the transmitter test mode, and shall be turned on when the DUT has accepted to exit the transmitter test mode, see Figure 1.4 on page 338. Implementations shall ensure that retransmissions of the LMP_accepted messages use the same whitening status as used in the original LMP_accepted.

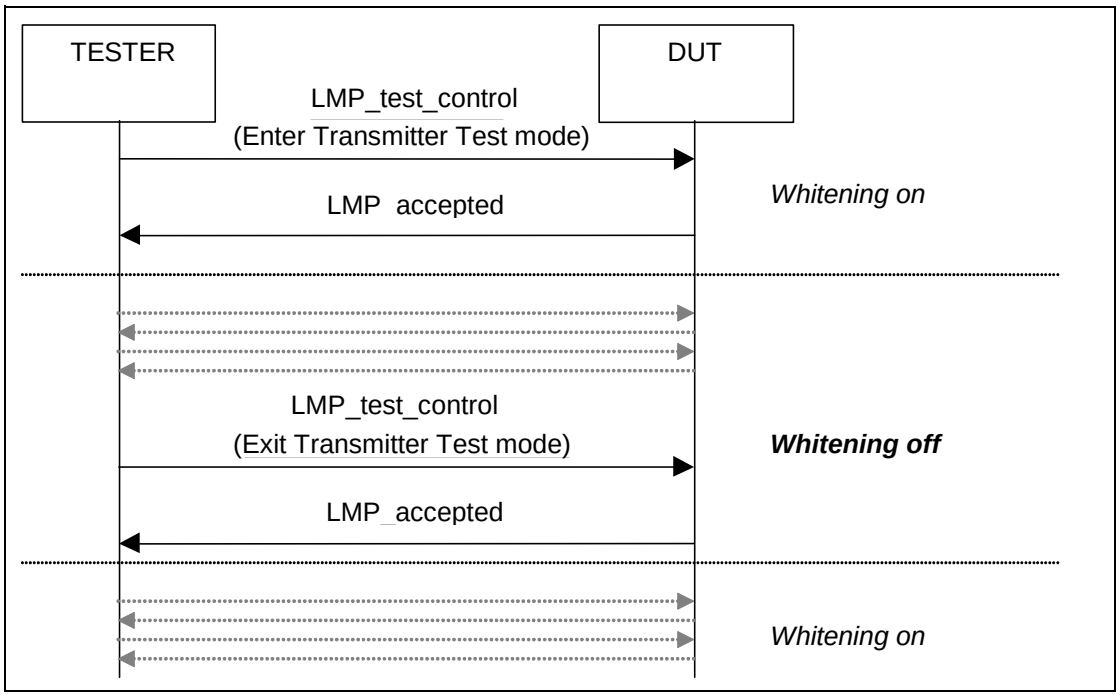

Figure 1.4: Use of whitening in Transmitter mode

1.1.2.2 Pseudorandom Sequence

The same pseudorandom sequence of bits shall be used for each transmission (i.e. the packet is repeated). A PRBS-9 Sequence is used, see [2] and [3].

The properties of this sequence are as follows (see [3]). The sequence may be generated in a nine-stage shift register whose 5th and 9th stage outputs are added in a modulo-two addition stage (see Figure 1.5), and the result is fed back to the input of the first stage. The sequence begins with the first ONE of 9 consecutive ONEs; i.e. the shift register is initialized with nine ones.

- Number of shift register stages: 9
- Length of pseudo-random sequence: 2^9-1 = 511 bits
- Longest sequence of zeros: 8 (non-inverted signal)

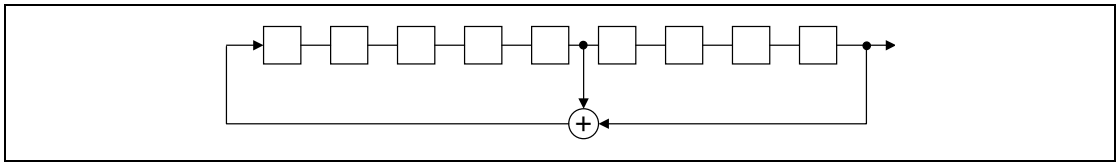

Figure 1.5: Linear Feedback Shift Register for Generation of the PRBS sequence

1.1.2.3 Control of Transmit Parameters

The following parameters can be set to configure the transmitter test:

1. Bit pattern:
   - Constant zero
   - Constant one
   - Alternating 1010...[1]
   - Alternating 1111 0000 1111 0000...[4]
   - Pseudorandom bit pattern
   - Transmission off
2. Frequency selection:
   - Single frequency
   - Normal hopping
3. TX frequency
   - k $\Rightarrow$ f := (2402 + k) MHz
4. Default poll period in TDD frames (n * 1.25 ms)
5. Packet Type
6. Length of Test Sequence (user data of packet definition in “Baseband Specification” on page 57[vol. 2])

1.1.2.4 Power Control

When the legacy power control mechanism is tested the DUT shall start transmitting at the maximum power and shall reduce/increase its power by one step on every LMP_incr_power_req or LMP_decr_power_req PDU received. When the enhanced power control mechanism is tested a DUT shall start transmitting at the maximum power and shall reduce/increase its power by one step or go to the maximum power level when a LMP_power_control_req PDU is received.

1.1.2.5 Switch Between Different Frequency Settings

A change in the frequency selection becomes effective when the LMP procedure is completed:

When the tester receives the LMP_accepted it shall then transmit POLL packets containing the Ack for at least 8 slots (4 transmissions). When these transmissions have been completed the tester shall change to the new frequency hop and whitening settings.

After sending LMP_accepted the DUT shall wait for the LC level Ack for the LMP_accepted. When this is received it shall change to the new frequency hop and whitening settings.

There will be an implementation defined delay after sending the LMP_accepted before the TX or loopback test starts. Testers shall be able to cope with this.

1. It is recommended that the sequence starts with a one; but, as this is irrelevant for measurements, it is also allowed to start with a zero.

Note: Loss of the LMP_Accepted packet will eventually lead to a loss of frequency synchronization that cannot be recovered. Similar problems occur in normal operation, when the hopping pattern changes.

1.1.2.6 Adaptive Frequency Hopping

Adaptive Frequency Hopping (AFH) shall only be used when the Hopping Mode is set to 79 channels (e.g. Hopping Mode = 1) in the LMP_test_control PDU. If AFH is used, the normal LMP commands and procedures shall be used. When AFH is enabled prior to entering test mode it shall continue to be used with the same parameters if Hopping Mode = 1 until the AFH parameters are changed by the LMP_set_AFH PDU.

The channel classification reporting state shall be retained upon entering or exiting Test Mode. The DUT shall change the channel classification reporting state in Test Mode based on control messages from the tester (LMP_channel_classification_req) and from the Host (HCI Write_AFH_Channel_Classification_Mode).

1.1.3 LoopBack test

In loopback, the device under test receives normal baseband packets containing payload *Accepted* from the tester. The received packets shall be decoded in the DUT, and the payload shall be sent back using the same packet type. The return packet shall be sent back in either the slave-to-master transmission slot directly following the transmission of the tester, or it is delayed and sent back in the slave-to-master transmission slot after the next transmission of the tester (see Figure 1.7 to Figure 1.9 on page 343).

There is no signaling to determine or control the mode. The device behavior shall be fixed or adjusted by other means, and shall not change randomly.

The tester can select, whether whitening is on or off. This setting holds for both up- and downlink. For switching the whitening status, the same rules as in Section 1.1.2 on page 336 (Figure 1.4) shall apply.

The following rules apply (for illustration see Figure 1.6 on page 342):

- If the synch word was not detected, the DUT shall not reply.
- If the header error check (HEC) fails, the DUT shall either reply with a NULL packet with the ARQN bit set to NAK or send nothing.
- If the packet contains an LMP message relating to the control of the test mode this command shall be executed and the packet shall not be returned, though ACK or NAK shall be returned as per the usual procedure. Other LMP commands are ignored and no packet is returned.
- The payload FEC is decoded and the payload shall be encoded again for transmission. This allows testing of the FEC handling. If the pure bit error rate shall be determined the tester chooses a packet type without FEC.

- The CRC is shall be evaluated. In the case of a failure, ARQN=NAK shall be returned. The payload shall be returned as received.
  A new CRC for the return packet shall be calculated for the returned payload regardless of whether the CRC was valid or not.
- If the CRC fails for a packet with a CRC and a payload header, the number of bytes as indicated in the (possibly erroneous) payload header shall be looped back.

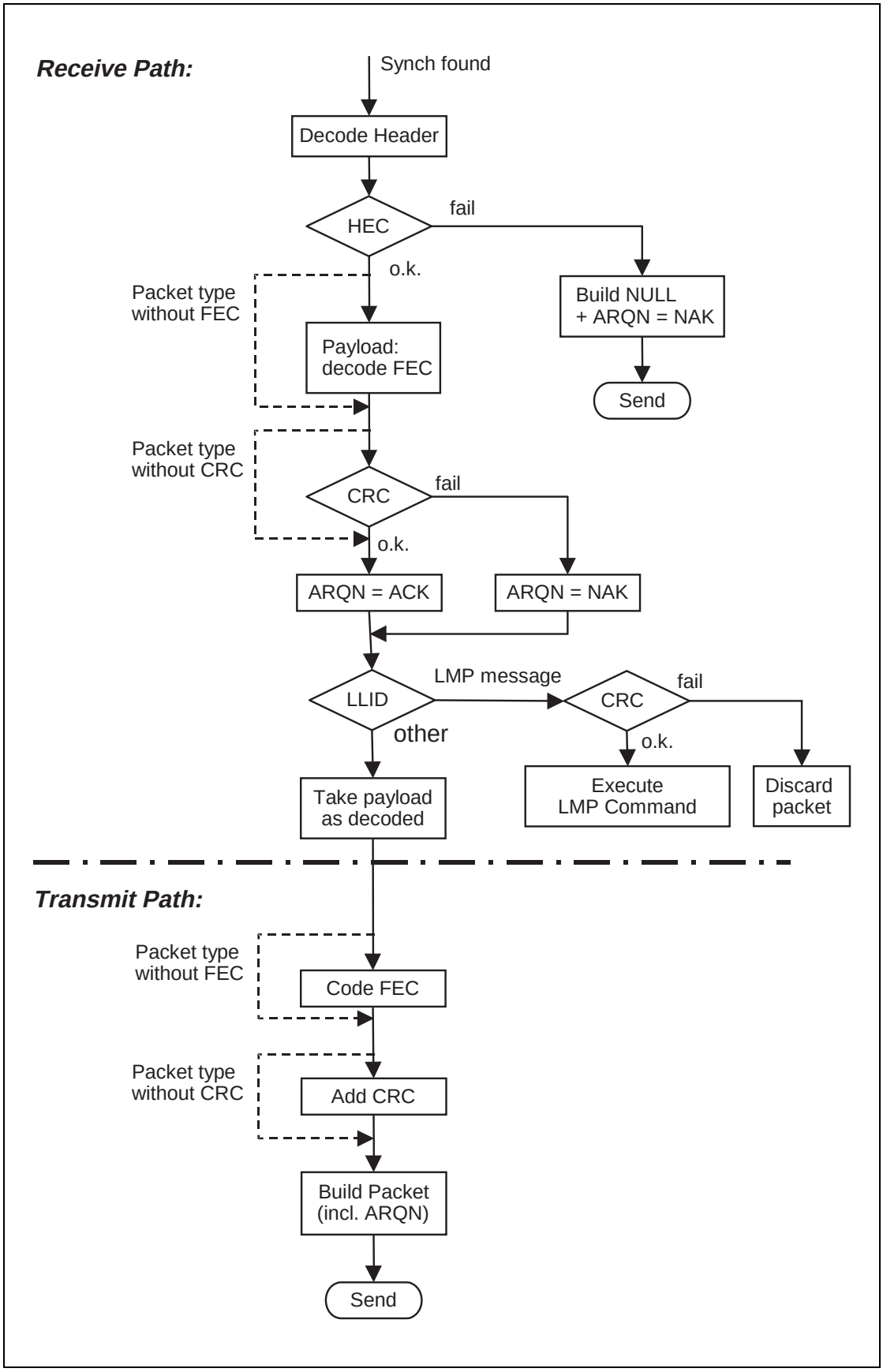

Figure 1.6: DUT Packet Handling in Loop Back Test

The timing for normal and delayed loopback is illustrated in Figure 1.7 to Figure 1.9:

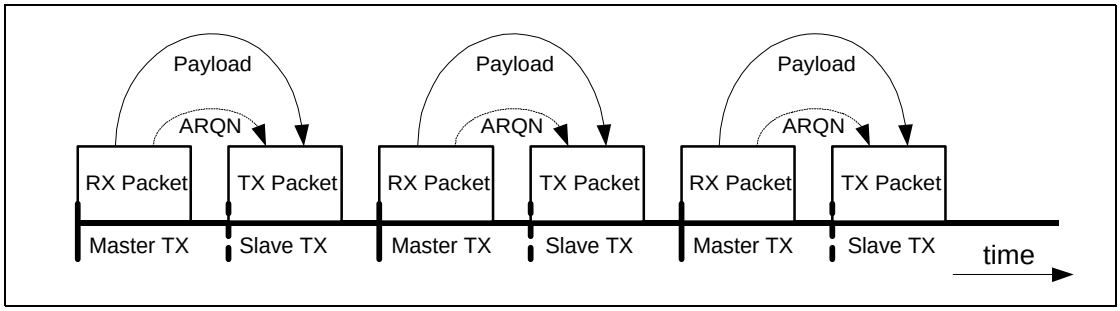

Figure 1.7: Payload & ARQN handling in normal loopback.

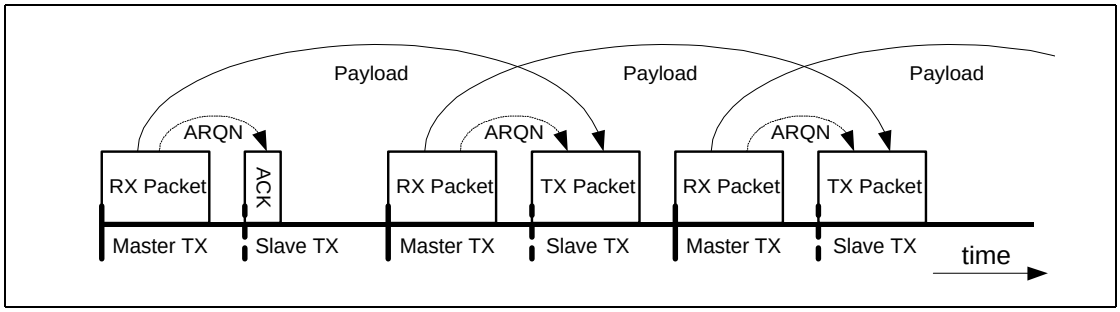

Figure 1.8: Payload & ARQN handling in delayed loopback - start.

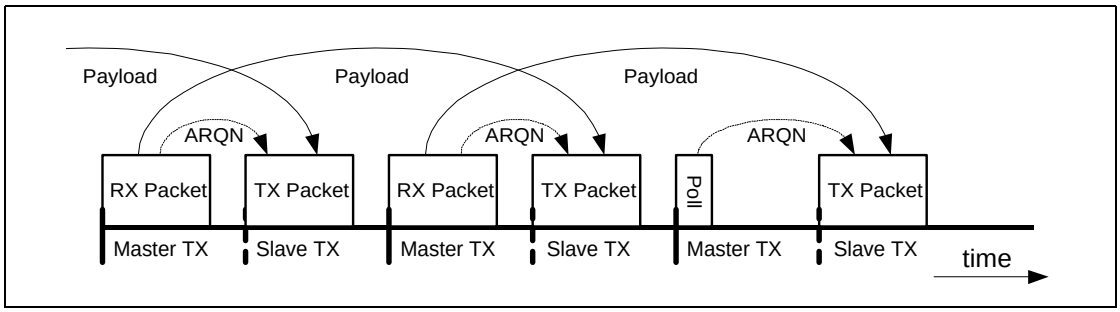

Figure 1.9: Payload & ARQN handling in delayed loopback - end.

The whitening is performed in the same way as it is used in normal active mode.

The following parameters can be set to configure the loop back test:

1. Packet Class[1]
   - ACL Packets
   - SCO Packets
   - eSCO Packets
   - ACL Packets without whitening

1. This is included because, in the future, the packet type numbering may not remain unambiguous.

- SCO Packets without whitening
- eSCO Packets without whitening

2. Frequency Selection
   - Single frequency (independent for RX and TX)
   - Normal hopping
3. Power level: (To be used according radio specification requirements)
   - power control or fixed TX power

The switch of the frequency setting is done exactly as for the transmitter test (see Section 1.1.2.5 on page 339).

1.1.4 Pause test

Pause test is used by testers to put the device under test into Pause Test mode from either the loopback or transmitter test modes.

When an LMP_test_control PDU that specifies Pause Test is received the DUT shall stop the current test and enter Pause Test mode. In the case of a transmitter test this means that no more packets shall be transmitted. While in Pause Test mode the DUT shall respond normally to POLL packets (i.e. responds with a NULL packet). The DUT shall also respond normally to all the LMP packets that are allowed in test mode.

When the test scenario is set to Pause Test all the other fields in the LMP_test_control PDU shall be ignored. There shall be no change in hopping scheme or whitening as a result of a request to pause test.

1.2 AMP TEST SCENARIOS

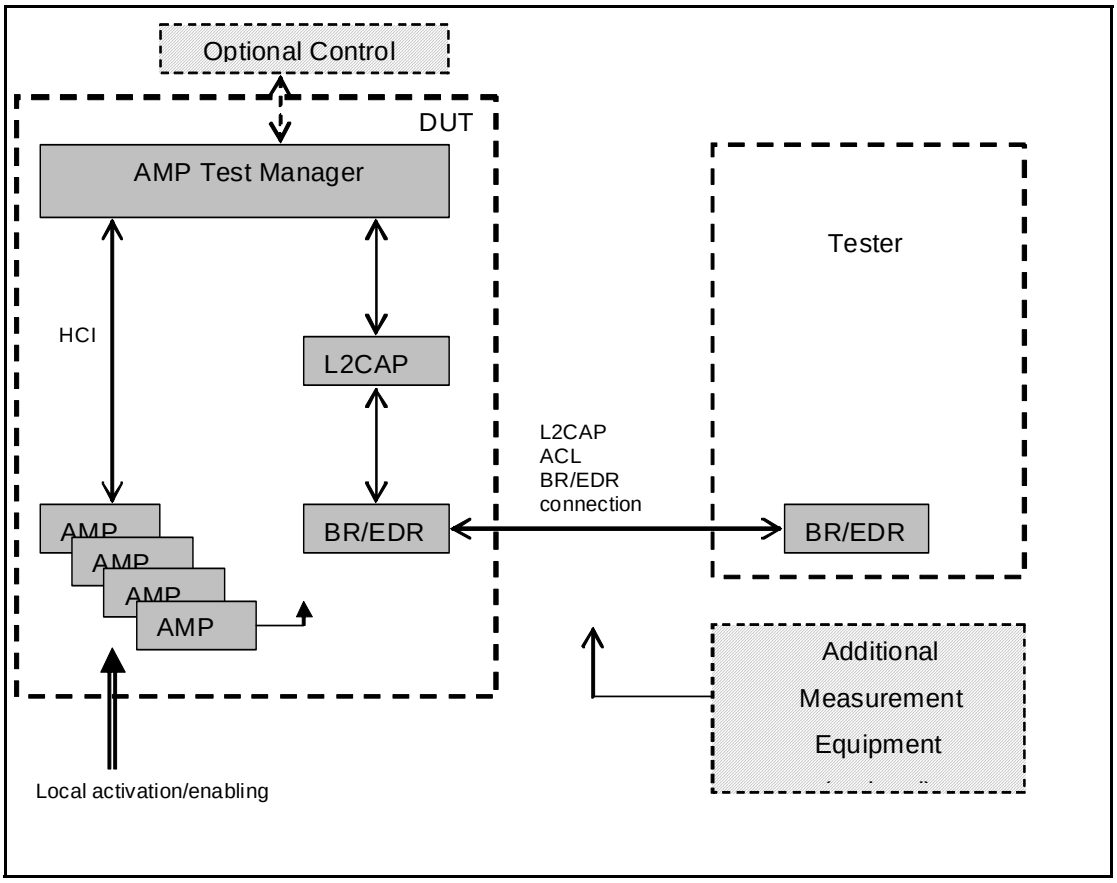

Figure 1.10: Test Architecture

1.2.1 Methodology Overview

To perform PHY tests on an AMP, the DUT shall first have AMP Test Mode enabled locally as required for a BR/EDR Controller using the HCI Enable_Device_Under_Test_Mode command. When this command is received by the AMP controller it shall enable the AMP to accept HCI Test Commands and when received by the BR/EDR controller it shall enable the AMP Test Manager to pass HCI commands and events between the tester and the AMP device utilizing the BR/EDR connection. A DUT AMP shall reject all AMP related HCI Test Commands, except HCI_Enable_Device_Under_Test_Mode, until the HCI_Enable_Device_Under_Test_Mode command has been issued by the local Host. Although AMP Test Mode is enabled the AMP shall not enter AMP Test Mode until the HCI_AMP_Test_Command is received.

Note: Enabling test mode with HCI_Enable_Device_Under_Test_Mode command allows the AMP to enter test mode when an HCI_AMP_Test_Command is received.

The local control of an AMP in AMP Test Mode shall be by the AMP Test Manager as shown in Figure 1.10. The AMP Test Manager will receive AMP Test Manager commands and HCI test commands via ACL data packets as shown

in Figure 1.10, using an L2CAP connectionless fixed test channel (channel 0x003F) from a Bluetooth test device. This does not exclude driving the AMP Test Manager directly from an implementation vendor specific interface as shown from the "Optional Control" in Figure 1.10.

The AMP Test Manager commands allow the tester to discover the number and type of AMPs supported and to read their PHY capability support via the AMP Test Manager.

The tester can use HCI commands and HCI Test Commands to control all of the AMPs to perform qualification, IOP testing as well as entering AMP Test Mode to perform AMP PHY tests. The HCI events and responses shall be routed back to the tester via the fixed test channel (0x003F).

If an HCI command is sent to an invalid Controller ID (a controller not reported in the Discovery Response) the AMP Command Rejected Event shall be returned with an Invalid Controller Id as the reason.

An AMP shall be taken out of AMP Test Mode by the HCI_Reset command. This will reset only the AMP receiving the HCI_Reset.

The AMP Test Manager shall not be enabled to support HCI commands over the fixed test channel (0x003F) unless AMP Test Mode has been enabled locally with the HCI_Enable_Device_Under_Test_Mode command.

The "Optional Control" interface shown in Figure 1.10 is a vendor specific interface that allows local control of the AMP Test Manager when a BR/EDR link may not be available.

1.2.1.1 Initiation Example Description

The AMP Test Manager is enabled to receive AMP test commands and HCI commands over the fixed test channel once it has been locally enabled. Using the fixed test channel, the tester shall use the AMP test commands and events to identify the number and type of AMPs available.

When the AMP Test Manager has been enabled and the AMPs identified the Tester shall use the AMP Test Manager to

- Transfer HCI commands and Events to and from the AMPs for qualification and IOP testing.
- Put the AMPs into test mode using HCI AMP test commands and events for AMP PHY testing.

1.2.2 Control and Configuration

Control and configuration of AMP tests shall be performed using two groups of commands/events over the ACL BR/EDR connection on the fixed test channel. The two groups are the AMP Test Manager commands/events which are to the

AMP Test Manager and the HCI AMP test commands/events which are routed via the AMP Test Manager between the AMP indicated as part of the message structure and the tester.

AMP Test Manager commands and events	AMP Command Rejected Event
	AMP Discover Request Command
	AMP Discover Response Event
	AMP Read PHY Capability Bit Map Request
	AMP Read PHY Capability Bit Map Response Event
HCI AMP test commands and events	Read Loopback Mode Command
	Write Loopback Mode Command
	Enable AMP Receiver Reports Command
	AMP Test End Command
	AMP Test Command
	AMP Start Test Event
	AMP Test End Event
	AMP Receiver Report Event

1.2.3 AMP Test Manager

The AMP Test Manager provides the interface to the AMPs available so that qualification, IOP and PHY testing can be performed using the BR/EDR connection. The AMP Test Manager provides the following services:

1. Identification of the number and type of AMPs available
2. Enumeration of the available AMPs so that they can be communicated to individually
3. Routing of the HCI commands and events between the AMPs and the tester over the ACL BR/EDR connection on the fixed test channel, or the vendor specific interface (that is, a local interface to the AMP Test Manager other than the BR/EDR radio).

1.2.4 Test Commands/Events Format

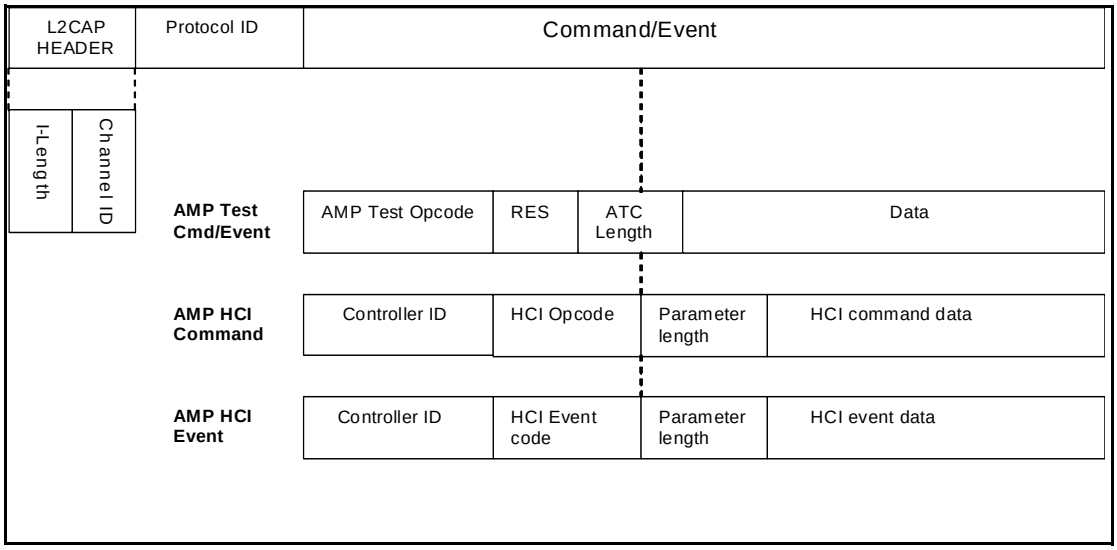

Figure 1.11: L2CAP test command/event formats

The fields shown are:

L2CAP header (4 octets)

This is the Basic L2CAP header with the Channel ID always set to test channel (0x003F). (See section [Vol. 3], Part A Section 3.1)

- *Length (2 octets)*

  Length of the Information payload which includes the Protocol ID and the Command/Event

- *Channel ID (2 octets)*

  Fixed value of (0x003F)

Protocol ID (1 octet)

This identifies the protocol in the command/event data. The IDs used are an extension of the UART transport packet types.

Protocol ID	Command/event type
0x01	HCI Command
0x02	Reserved
0x03	Reserved
0x04	HCI Event
0x05	AMP Test Command
0x06	AMP Test Event

Table 1.1: L2CAP valid test protocol IDs

Controller ID (1 octet)

Each Controller in a device is assigned a one-octet unique identifier by the local AMP Test Manager. This field determines the destination of the HCI Command or the source of the HCI Event. The Controller ID values shall be in the range of 1 to 255. Controller ID 0 has been reserved for the primary BR/EDR controller.

Note: "Controller" is a generic term which covers both the primary BR/EDR controller and any AMPs

ATO (AMP Test Opcode) (1 octet)

This is the AMP Test Manager commands or event code as described in Section 1.2.5.

RES (1 octet)

Reserved = 0

AMP Test Command (ATC) Length (2 octets)

This is the number of octets in the data portion of this message

AMP HCI Commands and Events

The format of these packets follow the standard HCI format described in [Vol. 2], Part E, after the Controller ID.

Examples

	Protocol ID	Command/Event			
AMP Test command	0x05	AMP Test Opcode	0x00	Length	AMP Test Command
AMP Test Event	0x06	AMP Test Opcode	0x00	Length	AMP Test Event
AMP HCI Command	0x01	Controller ID	HCI Command		
AMP HCI Event	0x04	Controller ID	HCI Event		

1.2.5 AMP Test Manager Commands/Events

The AMP Test Manager commands are sent to the AMP Test Manager from the tester and the events are from the AMP Test Manager to the tester.

The data fields are:

- *AMP Test Opcode (1 octet)*

  Identifies the type of AMP Test Manager command/event.
- *RES (1 octet)*

  Reserved and shall be set to 0.
- *Amp Test Command (ATC) length (2 octets)*

  Length of the data field of the command/event. This length does not include the AMP Test Opcode, reserved octet or the ATC length.

AMP Test Opcode	Description
0x00	Reserved
0x01	AMP Command Rejected Event
0x02	AMP Discover Request
0x03	AMP Discover Response Event
0x04	AMP Read PHY Capability Bit Map Command
0x05	AMP Read PHY Capability Bit Map Response Event
0x06 - 0xFF	Reserved

Table 1.2: AMP Test Opcodes

1.2.5.1 AMP Command Rejected Event

This event shall be sent by the DUT to the tester when a command cannot be accepted. The parameter returned indicates the reason.

Opcode = 0x01	Reserved = 0	ATC length = 2	Reason

The data fields are:

- *AMP Test Opcode (1 octet)*

  0x01
- *RES (1 octet)*

  Reserved and shall be set to 0
- *ATC length (2 octets)*

  Always set to 0x0002
- *Reason (2 octets)*

  See Table 1.3.

.

Reason Value	Description
0x0000	Command not recognized
0x0001	Invalid Controller ID
0x0002	Invalid Protocol ID
0x0003 to 0xFFFF	Reserved

Table 1.3: AMP Command reasons for rejection

1.2.5.2 AMP Discover Request

The tester shall send this command to the AMP Test Manager to obtain the available Controllers and their types.

Opcode = 0x02	Reserved = 0	ATC length = 0

The data fields are:

- *AMP Test Opcode (1 octet)*
  Shall be set to 0x02
- *RES (1 octet)*
  Reserved and shall be set to 0x00.
- *ATC length (2 octet)*
  Shall be set to 0x0000

Events generated

On receipt of the AMP_Discover_Request command the AMP Test Manager shall return the AMP_Discover_Response event.

1.2.5.3 AMP Discover Response Event

When the AMP Test Manager receives an AMP_Discover_Request command it shall reply to the tester with an AMP_Discover_Response event indicating for each controller the Controller ID and Controller Type. The first Controller ID / Type pair in the response shall be 0 for the BR/EDR primary controller followed by the available additional Controllers ID and Type pairs.

Opcode = 0x03	Reseved = 0	ATC length	Controller list

Controller list

Controller ID=0	Controller Type=0	Additional Controller ID and Type pairs

- *AMP Test Opcode (1 octet)*

  Shall be set to 0x03

- *RES (1 octet)*

  Reserved and shall be set to 0x00.

- *ATC length (2 octets)*

  ATClength = (Controller ID length + Controller Type length) * number of Controllers

- *Controller Types (1 octet)*

  Each type of Controller is assigned a unique one-octet value. These values are defined in Assigned Numbers. A device may have multiple AMPs of the same type.

Note: The AMP Discovery Response shall include the primary BR/EDR Controller as the first Controller ID and Controller Type pair.

1.2.5.4 AMP Read PHY Capability Bit Map Command

To perform AMP PHY tests the tester needs to know the supported PHY capabilities of the DUT. This information shall be provided in the PHY Capability Bit Map. This command shall be sent from the tester to the DUT to request the PHY Capability Bit Map from an AMP with the passed Controller ID.

Opcode = 0x04	Reserved = 0	ATC length = 1	Controller ID

The data fields are:

- *AMP Test Opcode (1 octet)*

  Always set to 0x04

- *RES (1 octet)*

  Reserved and shall be set to 0

- *ATC length (2 octets)*

  Always set to 0x0001

- *Controller ID (1 octet)*

  The Controller from which the PHY Capability Bit Map is being requested. This is an invalid request from a BR/EDR Controller and will be rejected with the reason of Invalid Controller ID.

1.2.5.5 AMP Read PHY Capability Bit Map Response Event

When the AMP_Read_PHY_Capability_Bit_Map Command is received by an AMP Test Manager it shall reply with the capability bit map for the AMP indicated if the Controller ID is valid.

- *AMP Test Opcode (1 octet)*

  Always set to 0x05
- *RES (1 octet)*

  Reserved and shall be set to 0
- *ATC length (2 octets)*

  The length of the PHY Capabilities Bit Map returned depending on the AMP type.
- *Status (1 octet)*

  See the following table.

Reason Value	Description
0x00	Success
0x01	Invalid Controller ID
0x02 to 0xFF	Reserved

Note: If the status is not Success the remaining parameters shall be zero.

- *Controller ID (1 octet)*

  This is the Controller ID from which the PHY Capability Bit Map has been sent.
- *PHY Capabilities Bit Map*

  See [Volume 5] for the PHY Capabilities Bit Map.

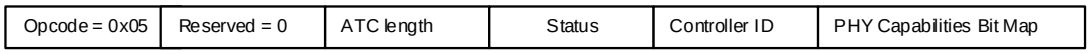

1.3 REFERENCES

[1] Bluetooth Link Manager Protocol.

[2] CCITT Recommendation O.153 (1992), Basic parameters for the measurement of error performance at bit rates below the primary rate.

[3] ITU-T Recommendation O.150 (1996), General requirements for instrumentation for performance measurements on digital transmission equipment.

[4] Bluetooth Baseband Specification.

2 TEST CONTROL INTERFACE (TCI)

This section describes the Bluetooth Test Control Interface (TCI). The TCI provides a uniform method of accessing the upper interface of the implementation being tested. This facilitates the use of a standardized interface on test equipment used for formal Qualification of implementations.

2.1 INTRODUCTION

2.1.1 Terms used

Conformance testing	Testing according to the applicable procedures given in the Bluetooth Protocol Test Specifications and the Bluetooth Profile Conformance Test Specification when tested against a test system.
HCI	Host Controller Interface
IUT	Implementation Under Test: An implementation of one or more Bluetooth protocols and profiles which is to be studied by testing. This term is used when describing the test concept for products and components equipped with Bluetooth wireless technology as defined in the PRD.
PRD	Bluetooth Qualification Program Reference Document: This document is maintained by the Bluetooth Qualification Review Board and is the reference to specify the functions, organization and processes inside the Bluetooth Qualification program.
TCI	Test Control Interface: The interface and protocol used by the test equipment to send and receive messages to and from the upper interface of the IUT.

2.1.2 Usage of the Interface

For all products and components equipped with Bluetooth wireless technology, conformance testing is used to verify the implemented functionality in the lower layers. Conformance testing of the lowest layers requires an upper tester to test the implementation sufficiently well.

In order to avoid that the tester will have to adapt to each and every product and component equipped with Bluetooth wireless technology, the use of the standardized TCI is mandated. This concept puts some burden upon the manufacturer of the IUT in terms of supplying an adapter providing the necessary conversion from/to the IUT's specific interface to the TCI. The adapter can consist of hardware, firmware and software. After qualification testing has been performed the TCI may be removed from the product or component equipped with Bluetooth wireless technology. It is the manufacturer's option to remove it from the qualified product or component equipped with Bluetooth wireless technology.

The TCI is used when qualifying the implemented functionality of the:

- Baseband layer, BB
- Link Manager layer, LM

If support of the Host Controller Interface is claimed by the manufacturer the TCI is used to qualify it.

2.2 TCI CONFIGURATIONS

This section describes the test configurations used when verifying the different Bluetooth requirements. Each layer in the Bluetooth stack is qualified using the procedures described in the layer specific test specification.

2.2.1 Bluetooth RF requirements

For qualification of the Bluetooth Radio Frequency requirements the defined Test Mode is used, see Section 1 on page 335.

Similar to TCI, the specific test mode functionality may be removed from the product or component after qualification, at the discretion of the manufacturer.

2.2.1.1 Required interfaces

For RF qualification only the air interface is required, see Figure 2.1. Depending on the physical design of the IUT it might be necessary to temporarily attach an RF connector for executing the RF tests. As stated in Section 1 on page 335, the Test Mode shall be locally enabled on the IUT for security reasons. The implementation of this local enabling is not subject to standardization.

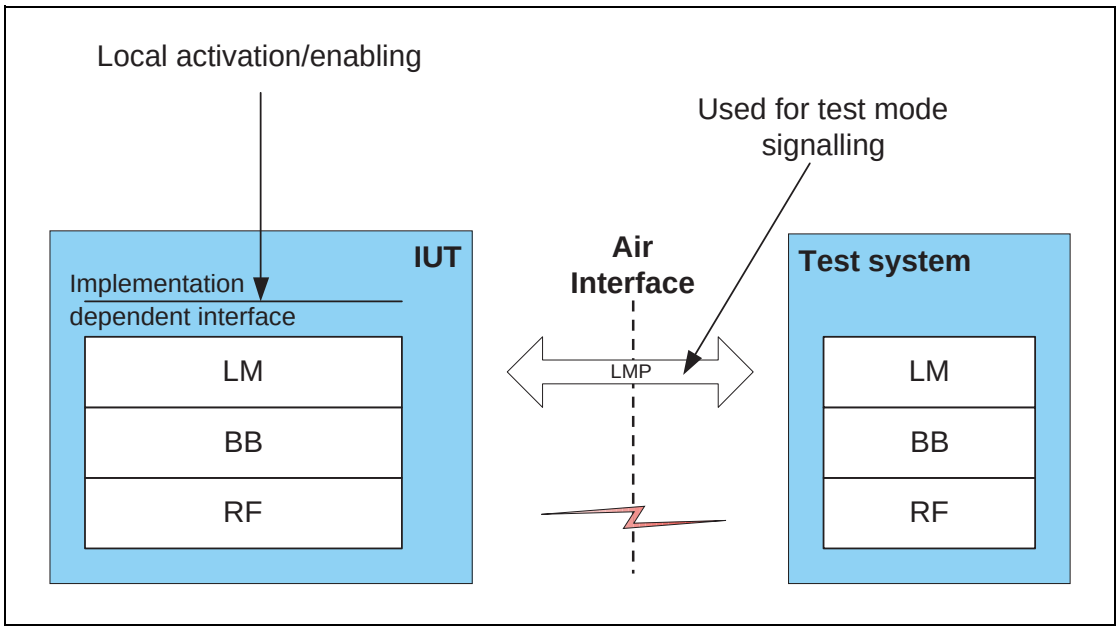

Figure 2.1: General test set-up for RF qualification

2.2.2 Bluetooth protocol requirements

Depending on which of the Bluetooth layers BB, LM or HCI are implemented in the product subject to qualification, the amount of testing needed to verify the Bluetooth protocol requirements differs. Also, the TCI used during the qualification is slightly different. The commands and events necessary for qualification are detailed in the test specifications and only those commands indicated in the test cases to be executed need be implemented.

For other protocols in the Bluetooth stack the TCI is not used. An implementation specific user interface is used to interact with the IUT's upper interface.

2.2.2.1 Required interfaces

For BB, LM and HCI qualification both the air interface of the IUT and the TCI are required. For other protocols both the air interface and the user interface are used as described in the test specification.

2.2.3 Bluetooth profile requirements

For each Bluetooth profile for which conformance is claimed, profile qualification testing is performed to verify the Bluetooth profile requirements. With higher layer protocols the TCI is not used during testing. A user interface specific to the implementation is used to interact with the IUT's upper interface.

2.2.3.1 Required interfaces

For this type of qualification both the air interface and the user interface of the IUT are used as described in the test specification.

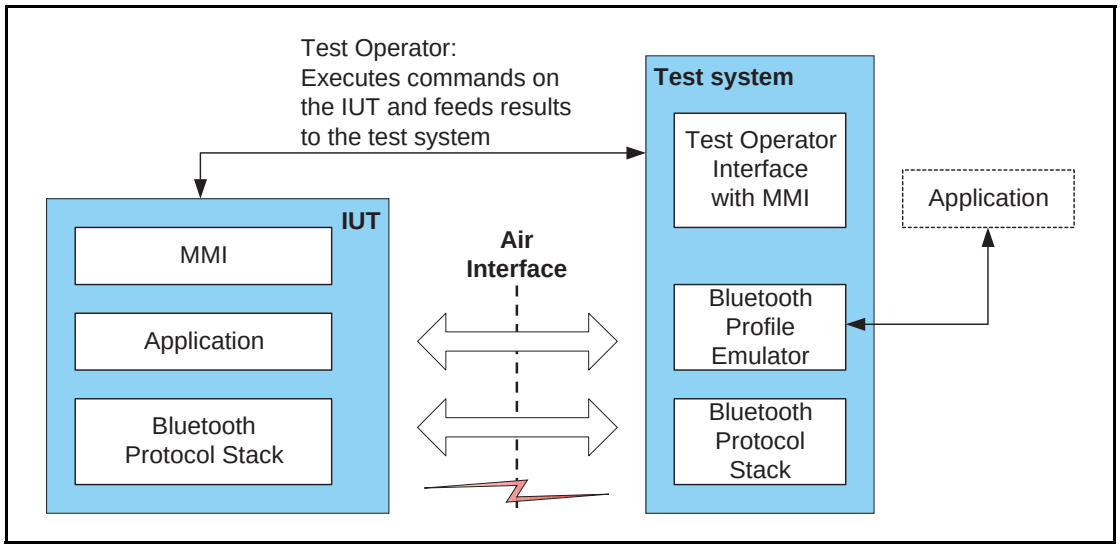

Figure 2.2: General test set-up for profile qualification

2.3 TCI CONFIGURATION AND USAGE

This interface is semantically and syntactically identical to the HCI interface described in “Host Controller Interface Functional Specification” on page 351[vol. 2]. The complete HCI interface is not required in the TCI, but the subset of HCI commands and events necessary for verifying the functionality of the IUT. The exact set of commands and events is specified in the test specifications for the layers subject to testing.

It is worth emphasizing again the TCI is an adapter, logically attached to the upper interface of the IUT. As such the TCI adapts the standardized signaling described here to the implementation specific interface of the IUT.

2.3.1 Transport layers

The method used to convey commands and events between the tester and the IUT’s upper interface can be either physical bearer or “software bearer”.

2.3.1.1 Physical bearer

It is recommended to use one of the transport layers specified for the HCI in. However, other physical bearers are not excluded and may be provided on test equipment. The use of a physical bearer is required for test cases active in category A. Please see the PRD for the definitions of test case categories. Please see the current active Test Case Reference List for the categorization of specific test cases.

2.3.1.2 Software bearer

There is no physical connection between the tester and the IUT’s upper interface. In this case, the manufacturer of the IUT shall supply test software and hardware that can be operated by a test operator. The operator will receive instructions from the tester and will execute them on the IUT. The “software bearer” shall support the same functionality as if using the TCI with a physical bearer. Use of the “software bearer” shall be agreed upon between the manufacturer of the IUT and the test facility that performs the qualification tests. The test facilities can themselves specify requirements placed on such a “software bearer”. Furthermore, the use of a “software bearer” is restricted to test cases active in one of the three lower categories B, C and D.

2.3.2 Baseband and link manager qualification

For the qualification of the link control part of the Baseband layer and for the Link Manager layer, the TCI is used as the interface between the test system and the upper interface of the IUT. The test system accesses the upper interface of the IUT by sending HCI commands and receiving HCI events from the IUT as described in the HCI specification. The required functionality on the TCI depends on the IUT's implemented functionality of the BB and LM layers, and therefore which test cases are executed.

A schematic example in Figure 2.3 shows the test configuration for BB and LM qualification of Bluetooth products which do not support HCI, and use a physical bearer for the TCI. In this example the Test Control (TC) Software represents what the manufacturer has to supply with the IUT when using an external test facility for qualification. The function of the TC Software is to adapt the implementation dependent interface to the TCI.

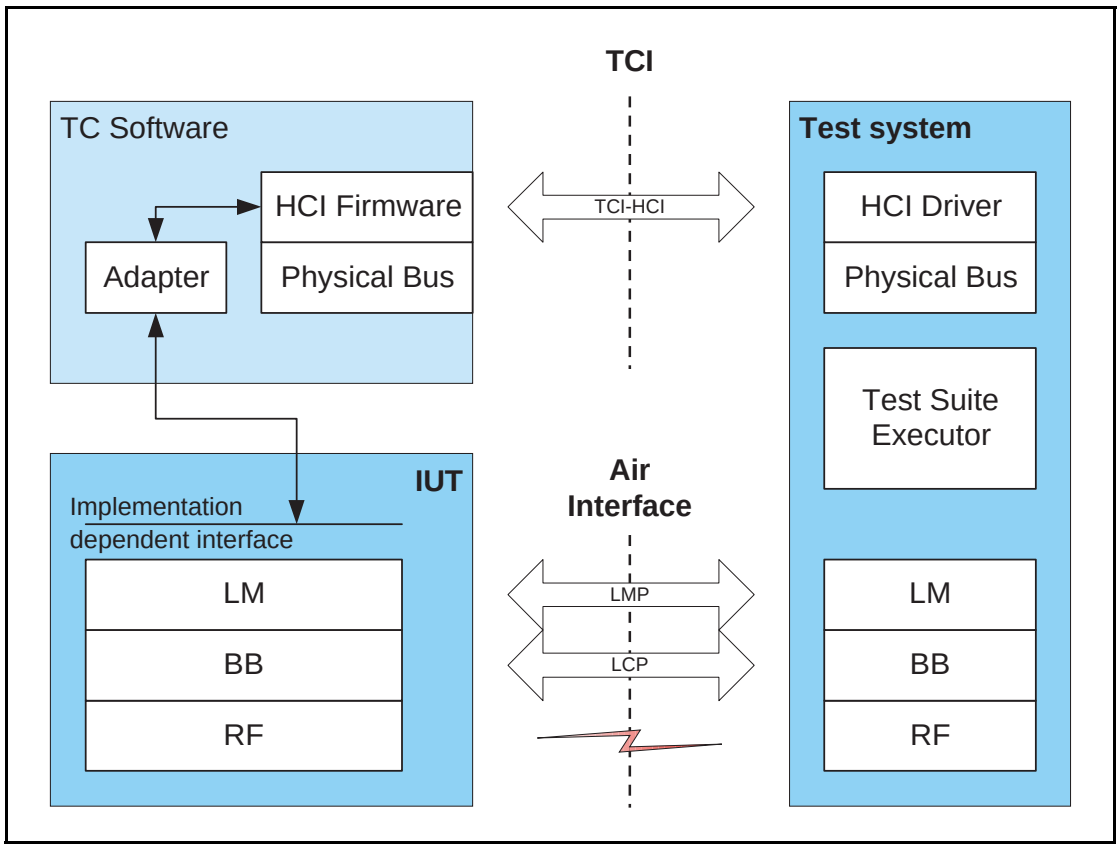

Figure 2.3: BB and LM qualification with TCI physical bearer

Figure 2.4 shows a schematic example of the test configuration for the same Bluetooth product using a “software bearer” for the TCI. Here the function of the Test Control Software is to represent the application that can be controlled by the test operator.

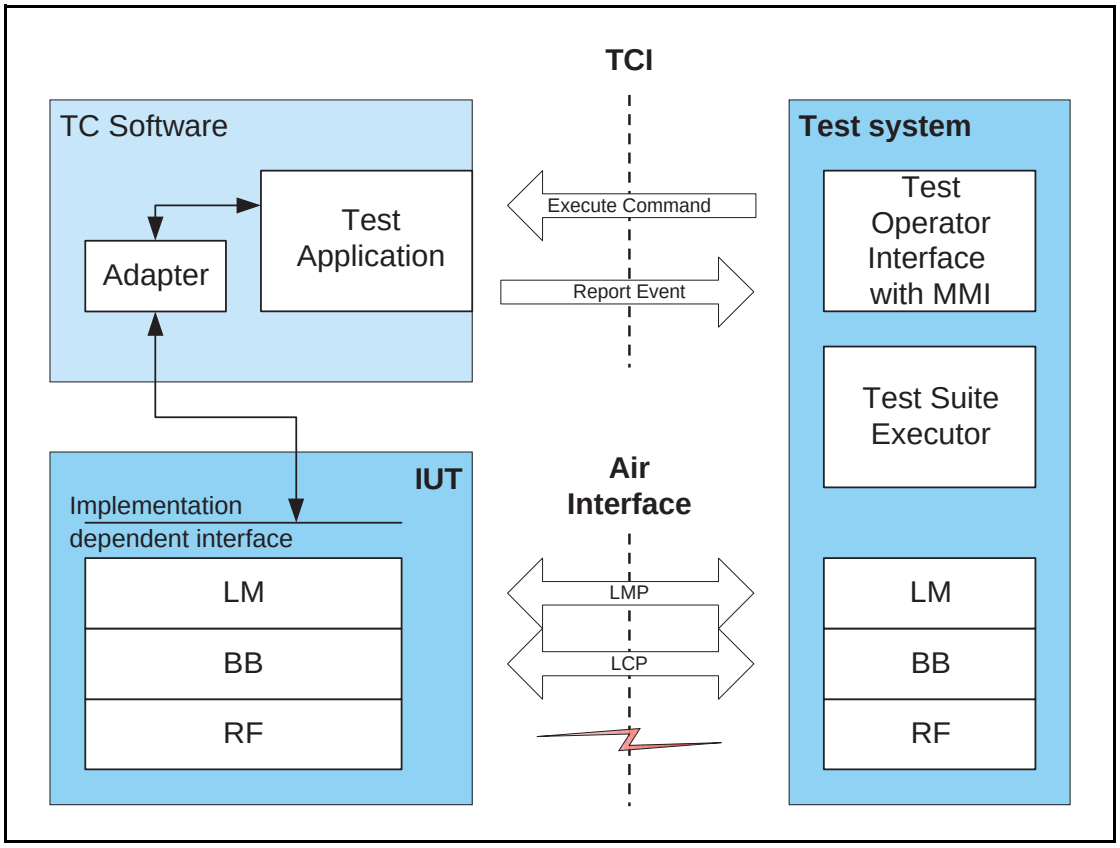

Figure 2.4: BB and LM qualification with “software bearer”

2.3.3 HCI qualification

The TCI may also be used for HCI signaling verification and qualification. The HCI signaling is only verified if support of the HCI functionality is claimed by the manufacturer.

A schematic example in Figure 2.5 shows the test configuration for HCI qualification of Bluetooth products. As can be seen in the figure the implemented HCI is used as the interface to the tester.

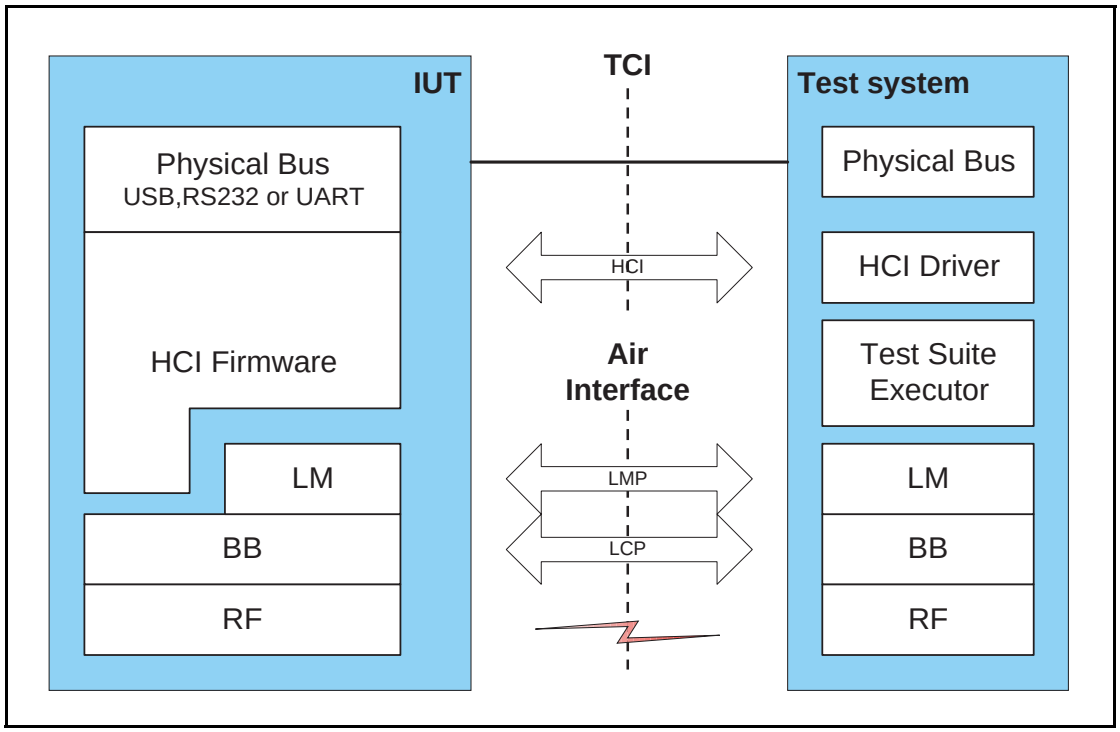

Figure 2.5: General test set-up for HCI qualification

Core System Package [Host volume]
Part E

AMP MANAGER PROTOCOL SPECIFICATION

This document specifies the changes to the Core specification required to incorporate the AMP Manager Protocol (A2MP) for the Alternate MAC/PHY feature.

CONTENTS

Contents 365

1 Introduction 366

1.1 General Description 366

2 General Operation 367

2.1 Basic Capabilities 367

2.2 AMP Manager Channel Over L2CAP 368

2.3 Using the AMP Manager Protocol 369

2.3.1 Discovering a Remote AMP Manager 369

2.3.2 Discovering Available Controllers on a Remote Device 369

2.3.3 Creation of AMP Physical Links 370

2.4 Controller IDs 371

2.5 Controller Types 371

3 Protocol Description 372

3.1 Packet Formats 372

3.2 AMP Command Reject (Code 0x01) 373

3.3 AMP Discover Request (Code 0x02) 374

3.4 AMP Discover Response (Code 0x03) 375

3.5 AMP Change Notify (Code 0x04) 379

3.6 AMP Change Response (Code 0x05) 379

3.7 AMP Get Info Request (Code 0x06) 380

3.8 AMP Get Info Response (Code 0x07) 380

3.9 AMP Get AMP Assoc Request (Code 0x08) 382

3.10 AMP Get AMP Assoc Response (Code 0x09) 383

3.11 AMP Create Physical Link Request (Code 0x0A) 384

3.12 AMP Create Physical Link Response (Code 0x0B) 385

3.13 AMP Disconnect Physical Link Request (Code 0x0C) 386

3.14 AMP Disconnect Physical Link Response (Code 0x0D) 387

3.15 Create Physical Link Collision Resolution 388

3.16 Response Timeout 388

3.17 Unexpected BR/EDR Physical Link Disconnect 389

Figures 390

Tables 391

1 INTRODUCTION

1.1 GENERAL DESCRIPTION

The AMP Manager Protocol (A2MP) provides a means for one device to solicit information regarding AMP capabilities from another device. Each device contains an abstract entity called an AMP Manager which uses the AMP Manager Protocol to communicate with a peer AMP Manager on another device.

2 GENERAL OPERATION

2.1 BASIC CAPABILITIES

The AMP Manager entity has the following responsibilities and capabilities:

1. Ability to discover remote AMP Managers.
2. Ability to discover available Controllers
3. Ability to query remote AMP Controller information
4. Ability to manage AMP physical links.
5. Responsible for the creation of dedicated AMP keys

The AMP Manager communicates with the local AMP PAL and communicates with remote AMP Managers using the AMP Manager Protocol over a fixed L2CAP channel. The AMP Manager entity exists within the Bluetooth stack as depicted in Figure 2.1.

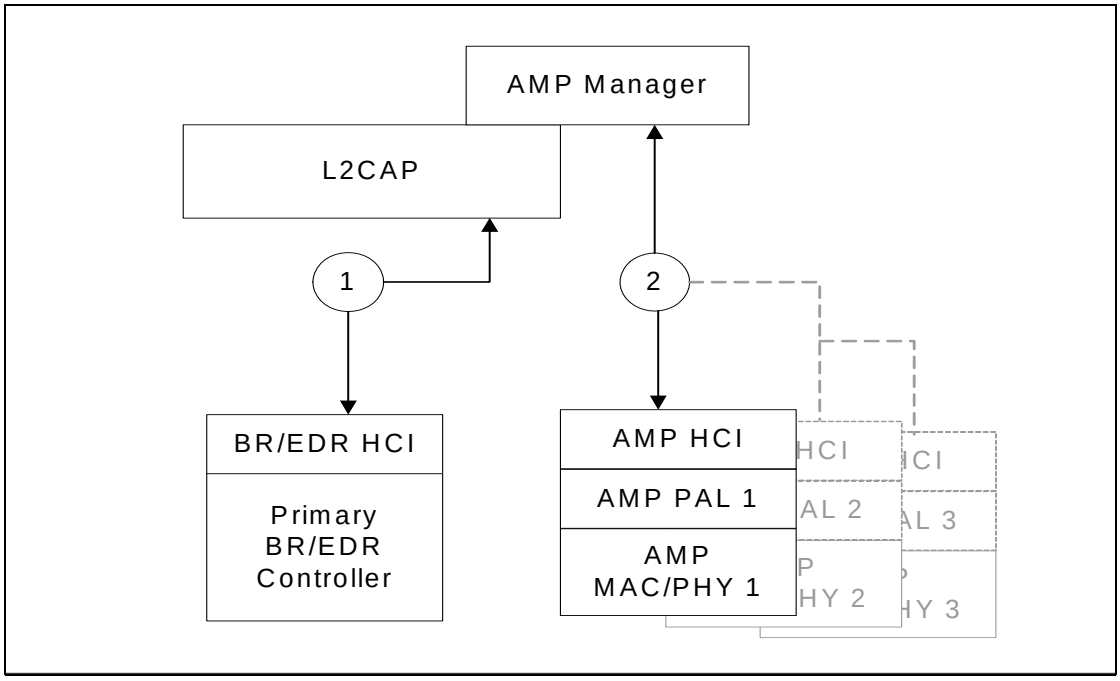

Figure 2.1: Overview of the Lower Software Layers

In original Figure 3.1, between steps 9 and 10 optional data flowed. Here we propose that a host can inquire on an AMP Controller's capabilities and eventually perform a move channel over to that AMP having created a Physical and Logical Links.

Figure 2.1 shows the two basic communication paths for the AMP Manager. The AMP Manager uses path 1 via L2CAP and the Primary BR/EDR Controller to first discover remote AMP Managers. The AMP Manager can query for the possibility of available remote AMPs and their capabilities as well as other

information. The AMP Managers communicate over the AMP Manager Protocol Channel (A2MP Channel). See Section 2.2 for more information on the A2MP Channel.

After discovering the AMPs supported by the remote device, the AMP Manager uses communication path 2 to manage the physical links between its local AMP(s) and AMPs on remote devices. Note that there can be more then one local AMP and there also may be more than one AMP located on the remote device.

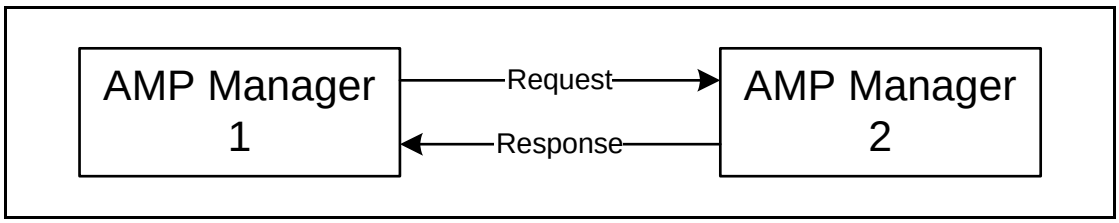

Figure 2.2: AMP Manager Peers

The AMP Manager Protocol is a request / response protocol between two AMP Managers. Requests and responses go in both directions. Either peer can request the same category of information from its corresponding peer.

2.2 AMP MANAGER CHANNEL OVER L2CAP

Peer AMP Managers communicate over the A2MP Channel which is an L2CAP fixed channel. The configuration parameters for the AMP Manager channel shall be as shown below. The MTU value shall be any valid value greater than or equal to 670 bytes.

Parameter	Value
MTU	≥ 670
Flush Timeout	0xFFFF (Infinite)
QoS	Best Effort
Mode	Enhanced Retransmission Mode
FCS Option	16-bit FCS

Table 2.1: AMP Manager Channel configuration parameters

The parameters for the Enhanced Retransmission Mode used on the fixed channel shall be as shown below. The Retransmission Time-out, Monitor Time-out and MPS shall be any valid value that is greater than or equal to the values stated in the following tables.

The minimum value for both MTU and MPS is 670 bytes. A larger MTU and MPS size can be communicated using the AMP Discover request (see section 3.3) and AMP Discover response (see Section 3.4) packets. The MTU parame-

Parameter	Value
TxWindow size	1
Max Transmit	0xff
Retransmission time-out	≥ 2 seconds
Monitor time-out	≥ 12 seconds
Maximum PDU size (MPS)	≥ 670
16-bit FCS	Enabled

Table 2.2: AMP Manager Channel Enhanced Retransmission Mode parameters

ter and the Enhanced Retransmission mode MPS parameter are numerically equal to allow an AMP manager to send any A2MP packet using a single L2CAP PDU. A device may segment any A2MP packet into multiple L2CAP PDUs.

2.3 USING THE AMP MANAGER PROTOCOL

The following text describes how the AMP Manager Protocol is used to establish an AMP physical link between two devices.

2.3.1 Discovering a Remote AMP Manager

Once an ACL connection is established over the Primary BR/EDR Controller, the local AMP Manager shall examine the L2CAP extended features bits of the remote device to determine if L2CAP fixed channels are supported (see [Part A], Logical Link Control and Adaptation Protocol Specification, Section 4.12 on page 65). If so, a query for the existence of its peer (AMP Manager) may be made by issuing an Information Request for all available fixed channels.

2.3.2 Discovering Available Controllers on a Remote Device

The next step is to discover the existence and capabilities of the AMP Controllers of the peer. An AMP Discover Request packet can be issued over the AMP Manager Protocol channel for this purpose.

In an AMP Discover Response packet, the peer AMP Manager will return information about its local AMP capabilities in the form of a Controller List. A Controller List is a sequence of Controller ID/Controller Type/Controller Status triples identifying the Controllers that are available for communication.

The Controller List contains a basic top level description of the available peer Controllers and their status. The AMP Manager parses this list for physical radio compatibility. If more information is required about a remote AMP Controller, the local AMP Manager can subsequently issue an AMP Get Info Request packet using the Controller ID retrieved via the AMP Discover exchange. An AMP Get Info Response packet is returned from the peer with AMP Controller

Info for the specified AMP Controller. The AMP Controller Info contains information about the AMP Controller that can be used by the host to determine whether or not to create a physical link to the AMP Controller.

2.3.3 Creation of AMP Physical Links

Once it has been determined that a Bluetooth connection over an AMP is desired, the AMP Manager retrieves the remote AMP Controller's AMP_Assoc structure by issuing an AMP Get AMP Assoc Request packet. It then passes the AMP_Assoc structure received from the remote device to its local AMP PAL and signals it to begin the physical discovery and connection process. In devices that support HCI this is done via the HCI_Create_Physical_Link command followed by the HCI_Write_Remote_AMP_ASSOC command.

Note that the AMP Manager only holds the contents of the AMP_Assoc structure for use in AMP Manager operations. The AMP Manager does not directly attempt to interpret the contents of the AMP_Assoc structure.

The AMP manager is responsible for generating the Physical Link Handle used in the HCI_Create_Physical_Link and HCI_Accept_Physical_Link commands. See section Host Controller Interface Functional Specification, Section 5.3.2, on page 411 for details. When the AMP PAL is ready it will generate an HCI_Channel_Selected event which is a signal to read the local AMP_Assoc structure using the HCI_Read_Local_AMP_ASSOC command.

The AMP Manager shall not create or accept a physical link over an AMP if mutual authentication was not performed or encryption was not enabled over BR/EDR.

When the AMP Manager does not have a dedicated AMP key for the selected Controller type between the two devices and the BR/EDR link key type is not "Debug", the AMP Manager shall call the Secure Simple Pairing h2 function (see [Vol 2 Part H] Section 7.7.5.2 on page 969 to generate a dedicated AMP key. This dedicated AMP key shall be used during subsequent connections.

If the Bluetooth device supports more than one AMP type, the AMP Manager shall call the h2 function a second time to regenerate Key_GAMP as defined in [Vol 2 Part H] Section 7.7.5.3 on page 969 before generating a Dedicated AMP link key for a different AMP type.

When the BR/EDR link key type is set to "Debug", the AMP Manager shall use Key_GAMP directly as the key for the AMP regardless of the AMP Type. The key length, key type and the link key itself are passed to the AMP Controller in the HCI_Create_Physical_Link command.

After receiving the HCI_Channel_Selected event and reading the local AMP_Assoc structure the AMP Manager then issues an AMP Create Physical Link Request packet to send the local AMP_Assoc structure to the peer device in order to engage the peer device in the AMP physical link creation.

If the peer accepts the request it issues an HCI_Accept_Physical_Link command to its local AMP and passes the AMP_Assoc structure received in the AMP Create Physical Link Request packet to its local AMP Controller. The peer responds with an AMP Create Physical Link Response packet to either accept or reject the request to create a physical link.

Both hosts will receive an HCI_Physical_Link_Complete event indicating the completion of the physical link creation.

On success, the procedure for creation of a logical connection can then commence.

2.4 CONTROLLER IDS

Each Controller in a device is assigned a one-octet unique identifier by the local AMP Manager. From the perspective of a remote device, Controller IDs are only valid during the life time of the AMP Manager Protocol channel. The Controller IDs on a remote device become invalid when the A2MP Channel is disconnected. If a local Controller becomes unavailable during the life time of the A2MP channel, the Controller ID may be reclaimed after receiving the AMP Change Response to the AMP Change Notify packets sent to all affected remote AMP Managers. It can then be assigned to any new AMP that is added. The value 0 is reserved for the Primary BR/EDR Controller. Other Controllers in the device shall be assigned values from 1 to 255.

If an AMP Controller becomes unavailable and later becomes available again during the life time of the A2MP Channel, remote AMP Managers shall not assume that the AMP Controller will be assigned the Controller ID that it was previously assigned.

2.5 CONTROLLER TYPES

Each type of Controller is assigned a unique one-octet value. These values are defined in Assigned Numbers. A device may have multiple AMPs of the same type.

3 PROTOCOL DESCRIPTION

The AMP Manager Protocol defines the procedures and format of the packets used to exchange information between two peer AMP Managers.

3.1 PACKET FORMATS

This section describes the packets used in the AMP Manager Protocol. Unless otherwise stated an implementation shall include all specified fields in a packet.

Figure 3.1 displays the general format of all AMP Manager Protocol packets.

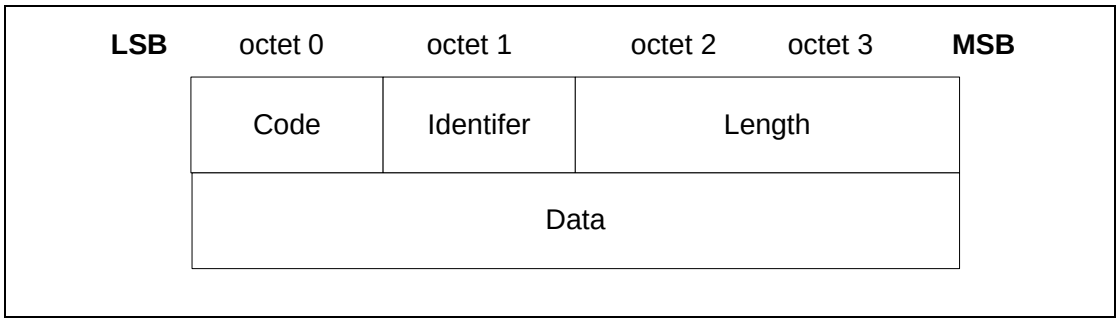

Figure 3.1: AMP Manager Protocol Packet Format

The fields shown are:

- *Code (1 octet)*

  The code identifies the type of packet. When an AMP manager receives a packet with an unknown Code field it shall send a Command Reject packet in response. Table 3.1 lists the codes defined by this document. All codes are specified with the most significant bit in the left most position.

Code	Description
0x00	Reserved
0x01	AMP Command Reject
0x02	AMP Discover request
0x03	AMP Discover response
0x04	AMP Change notify
0x05	AMP Change response
0x06	AMP Get Info request
0x07	AMP Get Info response
0x08	AMP Get AMP Assoc request
0x09	AMP Get AMP Assoc response

Table 3.1: Codes

Code	Description
0x0A	AMP Create Physical Link request
0x0B	AMP Create Physical Link response
0x0C	AMP Disconnect Physical Link request
0x0D	AMP Disconnect Physical Link response
0x0E - 0xFF	Reserved

Table 3.1: Codes

- *Identifier (1 octet)*

  The Identifier field matches responses with requests. The requesting device sets this field and the responding devices uses the same value in the response. For each A2MP channel an AMP manger shall use different identifiers for each request sent (this includes the AMP Change Notify command). Following the original transmission of an identifier in a request, the identifier may be recycled if all other identifiers have subsequently been used.

  A response packet with an invalid identifier is discarded. Identifier 0x00 is an illegal identifier and shall never be used in any packet. Table 3.2 shows the valid values for the Identifier field,

Value	Description
0x00	Invalid
0x01 - 0xFF	Valid

Table 3.2: Identifier

- *Length (2 octets)*

  The Length field indicates the size in octets of the data field of the packet only, i.e. it does not cover the Code, Identifier and Length fields.

- *Data (0 or more octets)*

  The Data field is variable in length. The Code field determines the format of the Data field. The Length field determines the length of the Data field.

3.2 AMP COMMAND REJECT (CODE 0X01)

An AMP Manager shall send an AMP Command Reject packet in response to a request packet with an unknown code or when sending the corresponding response is inappropriate. The identifier shall match the identifier of the request packet being rejected. AMP Command Reject packets shall not be sent in response to an unknown response packet.

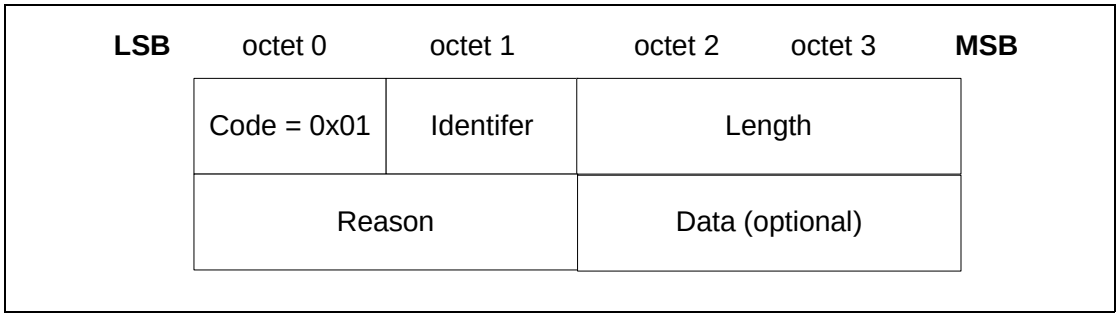

Figure 3.2: AMP Command Reject Packet

The data fields are

- *Reason (2 octets)*

  The Reason field describes why the request packet was rejected, and is set to one of the following Reason codes.

Reason value	Description
0x0000	Command not recognized
Other	Reserved

Table 3.3: AMP Command Reject reasons

- *Data (0 or more octets)*

  The length and content of the Data field depends on the Reason code. If the reason code is 0x0000 "Command not recognized" no Data field is used.

3.3 AMP DISCOVER REQUEST (CODE 0X02)

An AMP Manager sends an AMP Discover Request packet to a peer AMP Manager to obtain the list of the available Controllers supported by the peer device.

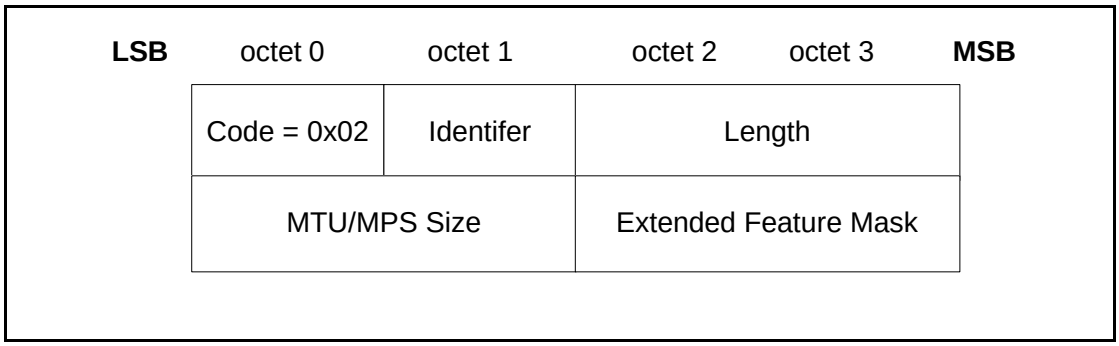

Figure 3.3: AMP Discover Request Packet

The data fields are

- *MTU/MPS size (2 octets)*

The MTU/MPS Size field in the AMP Discover Request packet indicates the MTU/MPS that the sender of the request can receive on the AMP Manager Protocol Channel. The minimum value is 670 (see Section 2.2). An AMP manager shall send the same value for the AMP Manager Protocol Channel MTU/MPS in both AMP Discover Request and AMP Discover Response packets.

- *Extended Feature Mask (2 octets)*

  The extended features supported by the AMP Manager are represented by a bit mask. Each feature is represented by a single bit which shall be set to 1 if the feature is supported and set to 0 otherwise. All reserved feature bits shall be set to 0 by the sender.

  The feature mask is defined inTable 3.4.

Supported Feature	Octet	Bit
Reserved	0	0-7
Reserved	1	0-6
Extension Bit	1	7

Table 3.4: A2MP Extended Feature Mask

Bit 7 of Octet 1 of this field is used to extend the A2MP Extended Feature Mask. If the Extension Bit is set then the Extended Feature Mask field is extended by two octets. Each two octet extension includes an Extension Bit that allows a further two octets to be added to the field. Figure 3.4 shows how the Extension Bit (E) can be used to extend the A2MP Extended Feature Mask.

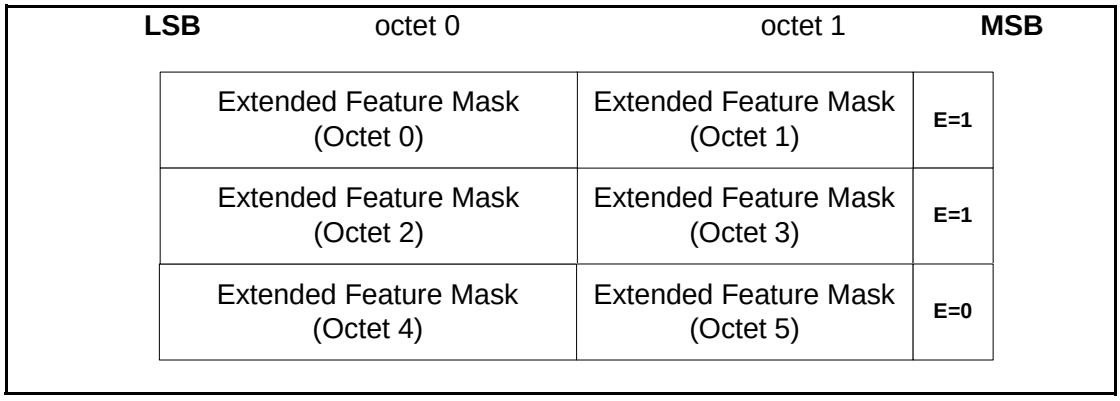

Figure 3.4: Example A2MP Extended Feature Mask

3.4 AMP DISCOVER RESPONSE (CODE 0X03)

When an AMP Manager receives an AMP Discover Request packet it shall reply with an AMP Discover Response packet indicating the IDs, types and status of the controllers that are currently available on the local device. If there is a change in the number or status of supported controllers after sending an AMP Discover Response packet and before the A2MP Channel is disconnected, the

AMP Manager shall send an AMP Change Notify packet to the peer AMP Manager.

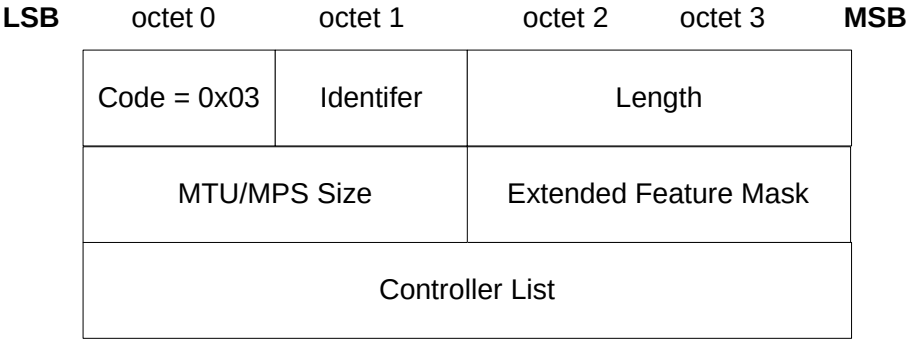

Figure 3.5: AMP Discover Response Packet

The data fields are

- *MTU/MPS size (2 octets)*

  The MTU/MPS Size field in the AMP Discover Response packet indicates the MTU/MPS that the sender of the response can receive on the AMP Manager Protocol Channel. The minimum value is 670 (see Section 2.2). An AMP Manager shall send the same value for the AMP Manager Protocol Channel MTU/MPS supported in both AMP Discover Request and AMP Discover Response packets.

- *Extended Feature Mask (2 octets)*

  The extended features supported by the AMP Manager are represented by a bit mask. Each feature is represented by a single bit which shall be set to 1 if the feature is supported and set to 0 otherwise. All unknown, reserved, or unassigned feature bits shall be set to 0.

  The feature mask is defined in Table 3.4 and Figure 3.4.

- *Controller List (3 or more octets)*

  Controller List is variable in length. It consists of 1 or more entry. Each entry is comprised of a Controller ID, a Controller Type and a Controller status.

  An entry for Controller ID 0x00 (Primary BR/EDR controller) shall always be sent and shall be the first entry in the Controller List. The Controller Type for this entry shall be set to 0x00 (Primary BR/EDR controller). The Controller status for this entry shall be set to 0x01 (The AMP Controller can only be used by Bluetooth technology). If the Primary BR/EDR Controller's Link Manager does not support Secure Simple Pairing, it shall be the only Controller in the Controller List.

  Figure 3.6 displays the format of the Controller list.

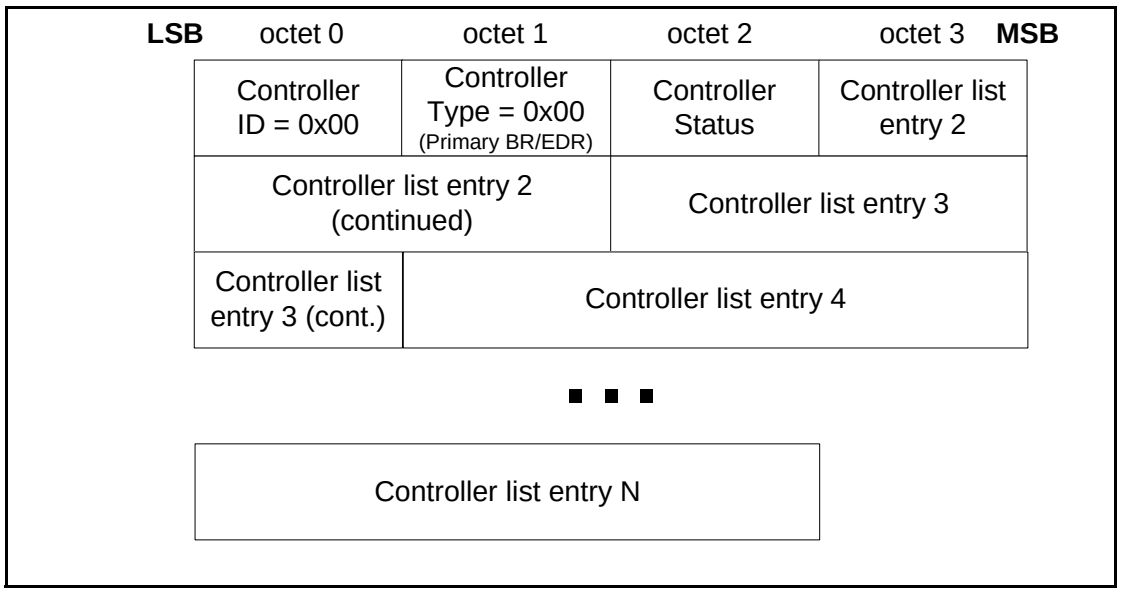

Figure 3.6: Controller list format

- *Controller ID (1 octet)*

  The Controller ID uniquely identifies a Controller (see Section 2.4 for more information about Controller IDs).

- *Controller Type (1 octet)*

  The Controller Type specifies the type of the Controller. The Controller type values are defined in Assigned Numbers.

- *Controller Status (1 octet)*

  The Controller Status field indicates the current status of the AMP. The status information can be used by the receiving device to help decide if it should use the AMP. If multiple AMPs are available the status can also be used by an implementation to determine which would be the optimal AMP to use. None of the AMP status values indicate that a Physical Link shall not be created to the AMP. If an implementation wishes to ensure it does not receive Create Physical Link Requests for a given AMP then it should remove the associated entry from the Controller list it sends.

Table 3.5 contains the different values of the Controller Status field.

Value	Parameter Description
0x00	The Controller radio is available but is currently physically powered down. This value should be used if the AMP Controller is present and can be powered up by the AMP Manager. A Controller List entry shall not exist for an AMP that is not present or cannot be powered up by the AMP manager. This value indicates that there may be a cost of time and power to use this AMP Controller (i.e., the time taken and power required to power up the AMP Controller). These costs are AMP type and AMP implementation dependent.

Value	Parameter Description
0x01	This value indicates that the AMP Controller is only used by the Bluetooth technology and will not be shared with other non-Bluetooth technologies. This value shall only be used if the AMP Controller is powered up. This value does not indicate how much bandwidth is currently free on the AMP Controller.
0x02	The AMP Controller has no capacity available for Bluetooth operation. This value indicates that all of the AMP Controller's bandwidth is currently allocated to servicing a non Bluetooth technology. A device may create a Physical Link to an AMP Controller that has this status. This value shall only be used if the AMP Controller is powered up.
0x03	The AMP Controller has low capacity available for Bluetooth operation. This value indicates that the majority of the AMP Controller's bandwidth is currently allocated to servicing a non Bluetooth technology. An AMP Controller with capacity in the approximate range of 0 < capacity < 30% should indicate this value. This value does not indicate how much of the capacity available for Bluetooth operation is currently being used.. This value shall only be used if the AMP Controller is powered up.
0x04	The AMP Controller has medium capacity available for Bluetooth operation. An AMP Controller with capacity in the approximate range of 30% < capacity < 70% should indicate this value. This value does not indicate how much of the capacity available for Bluetooth operation is currently being used.
0x05	The AMP Controller has high capacity available for Bluetooth operation This value indicates that the majority of the AMP Controller's bandwidth is currently allocated to servicing the Bluetooth technology. An AMP Controller with capacity in the approximate range of 70% < capacity < 100% should indicate this value.. This value does not indicate how much of the capacity available for Bluetooth operation is currently being used. This value shall only be used if the AMP Controller is powered up.
0x06	The AMP Controller has full capacity available for Bluetooth operation This value indicates that while currently the AMP is only being used by Bluetooth the device allows a different technology to share the radio. This value shall be used as the default Controller Status value for devices that are not capable of determining the available capacity for Bluetooth operation for an AMP Controller. This value does not indicate how much of the capacity available for Bluetooth operation is currently being used. This value shall only be used if the AMP Controller is powered up.
Other	Reserved

Table 3.5: Controller Status

The available capacity ranges given for values 0x03, 0x04, and 0x05 are only approximate and permit an implementation to not send an AMP Change Notify packet if the current availability is moving frequently from one range to another (e.g., if the current availability is moving between 68% (corresponding to Controller status 0x04) and 72% (corresponding to Controller status 0x05) frequently an implementation is not mandated to send an AMP Change Notify packet every time the value crosses the approximate 70% threshold between the two Controller Status values).

3.5 AMP CHANGE NOTIFY (CODE 0X04)

The AMP Change Notify packet indicates to the peer device that something has changed in the list of supported Controllers. An AMP Change Notify packet shall only be sent to a remote AMP Manager if it has previously requested a Controller List via an AMP Discover Request. Examples of when an AMP Change Notify packet is sent is when a new Controller becomes available or one or several Controllers advertised in the previous AMP Discover Response or AMP Change Notify packet become unavailable or if the status of a previously advertised Controller changes. The AMP Change Notify carries the new list of the available Controllers. Based on the changes from the previous Change Notify or Discovery Response, the AMP Manager can identify added or deleted controllers or controllers that have changed status.

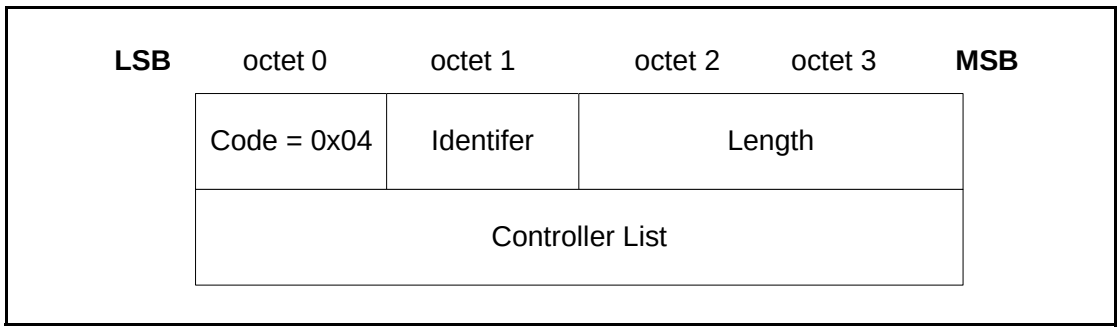

Figure 3.7: AMP Change Notify Packet

- *Controller List (3 or more octets)*

  Controller List is variable in length. It consists of 1 or more entries. Each entry is comprised of a Controller ID, a Controller Type and a Controller status (see Section 3.4 for a description of Controller List).

3.6 AMP CHANGE RESPONSE (CODE 0X05)

The AMP Change Response packet shall be sent to acknowledge receipt of the AMP Change Notify packet.

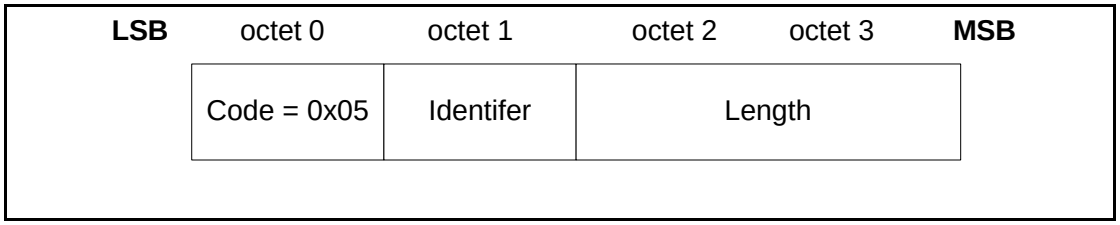

Figure 3.8: AMP Change Response Packet

3.7 AMP GET INFO REQUEST (CODE 0X06)

To determine if a physical link should be established to a particular AMP Controller, an AMP Manager may need to obtain further information for a remote AMP Controller. For each Controller ID reported in the AMP Discover Response or AMP Change Notify packet the AMP Manager can query this information by issuing an AMP Get Info Request packet. The exception is Controller ID 0. Information for the Primary BR/EDR radio shall not be obtained with an AMP Get Info Request packet.

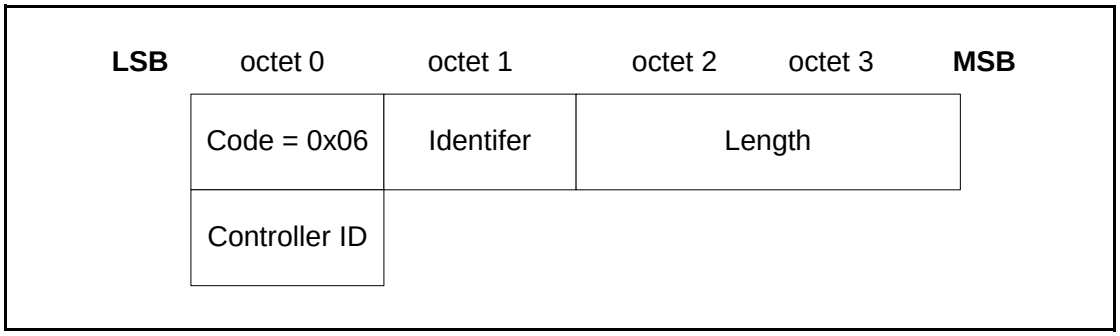

Figure 3.9: AMP Get Info Request Packet

The data fields are

- *Controller ID (1 octet)*

  Controller ID is one of the IDs reported in the latest AMP Discover Response, or AMP Change Notify packet received from the peer AMP Manager.

3.8 AMP GET INFO RESPONSE (CODE 0X07)

When an AMP Manager receives an AMP Get Info Request packet it shall reply with the AMP Get Info Response packet. This packet carries Controller Information including bandwidth and latency capabilities. The receiver of the AMP Get Info Response packet can assume that the value of all fields shall remain constant while the remote AMP remains active.

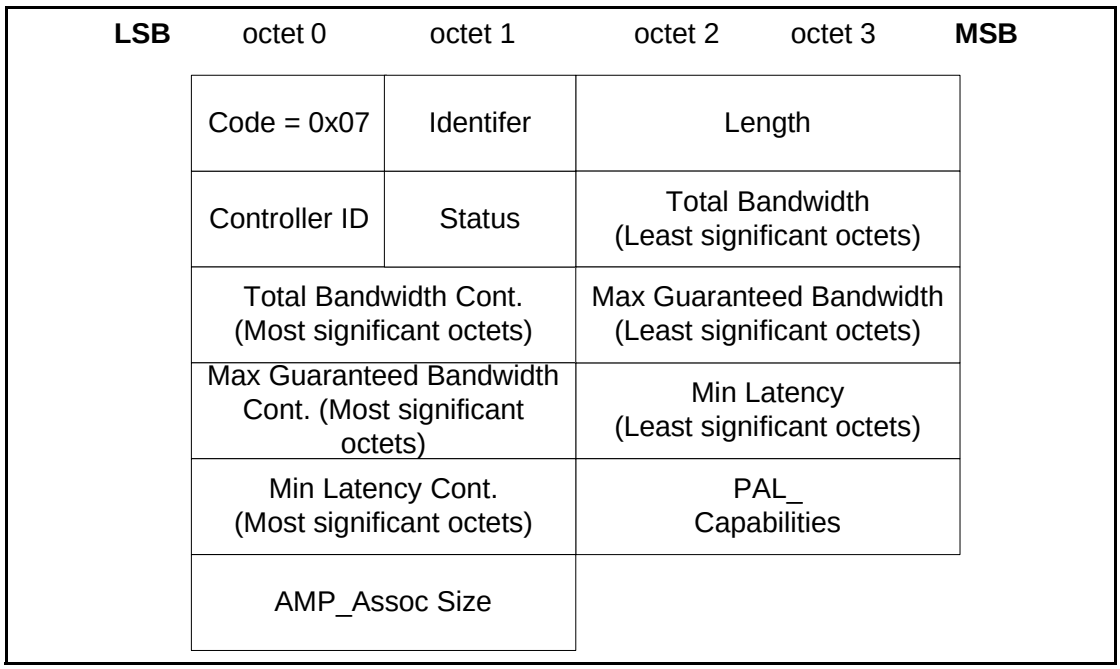

Figure 3.10: AMP Get Info Response Packet

- *Controller ID (1 octet)*

  Controller ID is the identifier requested in the AMP Get Info Request.

- *Status (1 octet)*

  The Status field indicates the status of the request

Status Code	Description
0x00	Success
0x01	Invalid Controller ID
Other	Reserved

Table 3.6: AMP Get Info Response Status values

An AMP Get Info Response with status of Invalid Controller ID shall be sent by an AMP manager that has received an AMP Get Info Request containing either:

a) A Controller ID that has not been allocated by the AMP manager

b) A Controller ID of 0

If the Status field is set to Invalid Controller ID all subsequent fields in the AMP Get Info Response shall be ignored by the receiver.

- *Total Bandwidth (4 octets)*

  The Total Bandwidth field indicates the total data rate in kbits per second (1000 bps) that can be achieved by the Controller for applications. This value shall account for any bandwidth limitations of the Host and the HCI

transport if present. The Host is responsible for determining these bandwidth limitations.

- *Max Guaranteed Bandwidth (4 octets)*

  The Maximum Guaranteed Bandwidth field indicates the maximum data rate in kbits per second that the AMP can guarantee for a logical channel. Any request made by an application above this level will be rejected. This value shall account for any bandwidth limitations of the Host and the HCI transport if present. The Host is responsible for determining these bandwidth limitations.

- *Min Latency (4 octets)*

  The Min Latency field indicates the minimum latency in microseconds that the AMP can guarantee for a logical channel. This value shall account for any latency limitations of the Host and the HCI transport if present. The Host is responsible for determining these latency limitations.

- *PAL_Capabilities (2 octets)*

  The PAL_Capabilities field contains the PAL capabilities returned via HCI Read Local AMP Info Command (see [Vol 2 Part E] Section 7.5.8 for more information).

- AMP_Assoc Structure Size (2 octets)

  The maximum size in octets of the requested AMP's AMP_Assoc structure. The value of the AMP_Assoc Structure Size for a given AMP is determined by the controller. If an HCI is being used this value can be retrieved by the Host sending the HCI_Read_Local_AMP_Info command to the Controller.

3.9 AMP GET AMP ASSOC REQUEST (CODE 0X08)

To establish a physical link to a particular Controller, an AMP Manager needs to obtain the AMP_Assoc structure for the remote Controller. The remote AMP is identified by its Controller ID as reported in the AMP Discover Response or AMP Change Notify packet. AMP Get AMP Assoc Request packet shall not be used to obtain an AMP_Assoc structure for the Primary BR/EDR Controller.

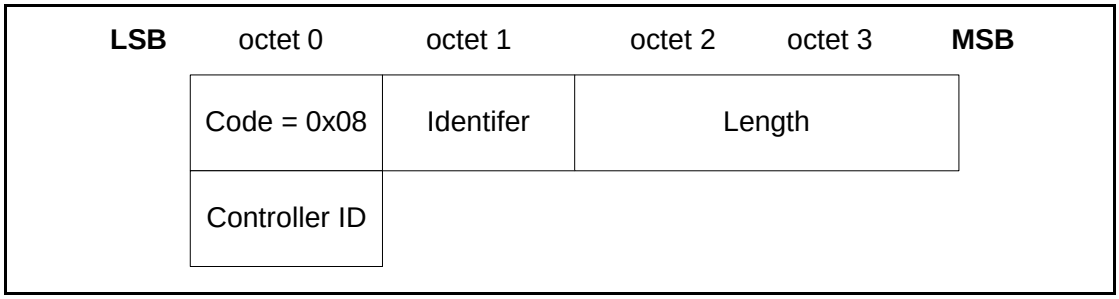

Figure 3.11: AMP Get AMP Assoc Request Packet

The data fields are:

- *Controller ID (1 octet)*

Controller ID is one of the IDs reported in the latest AMP Discover Response or AMP Change Notify packet received from the peer AMP Manager.

3.10 AMP GET AMP ASSOC RESPONSE (CODE 0X09)

When an AMP Manager receives an AMP Get AMP Assoc Request packet it shall reply with the AMP Get AMP Assoc Response packet. This packet carries the AMP_Assoc structure. The AMP_Assoc structure is used in creating the physical AMP link. The exact length and format of the AMP_Assoc structure shall be defined in each AMP PAL specification.

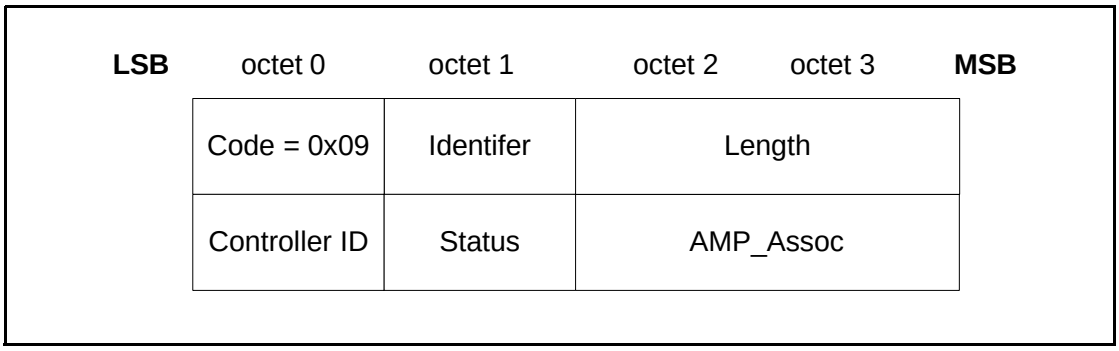

Figure 3.12: AMP Get AMP Assoc Response Packet

The data fields are

- *Controller ID (1 octet)*

  Controller ID is the identifier requested in the AMP Get AMP Assoc Request packet.

- *Status (1 octet)*

  The Status field indicates the status of the request.

Status Code	Description
0x00	Success
0x01	Invalid Controller ID
Other	Reserved

Table 3.7: AMP Get AMP Response Status values

An AMP Get AMP Assoc Response packet with status of Invalid Controller ID shall be sent by an AMP manager that has received an AMP Get AMP Assoc Request packet containing either

a) A Controller ID that has not been allocated by the AMP manager

b) A Controller ID of 0

If the Status field is set to Invalid Controller ID (0x01) then the AMP_Assoc structure shall not be included in the Get AMPAssoc Response packet.

- *AMP_Assoc structure (from 0 to (A2MP MTU - 6) octets)*

  AMP_Assoc structure is variable in length. The Controller Type of the Controller ID referenced in the AMP Get AMP Assoc Request packet determines the format and the length of the AMP_Assoc structure. The length of the AMP_Assoc structure can be determined by subtracting two from the Length field.

  The length of the AMP_Assoc structure shall not exceed any previously communicated AMP_Assoc length (the AMP_Assoc length is included in the AMP Get Info Response packet. See Section 3.8).

3.11 AMP CREATE PHYSICAL LINK REQUEST (CODE 0X0A)

Establishing an AMP physical link requires signaling between the AMP Managers in order to turn the AMP Controller on, if it is not already turned on, and to provide information to set the required state of the AMP Controller, setup addressing, security, etc. When an AMP Manager receives an AMP Create Physical Link request packet it shall initiate its part of the AMP physical link creation and send the AMP Create Physical Link Response packet. AMP Create Physical Link request shall not be used to establish a physical link to the Primary BR/EDR Controller.

For some AMP Controllers it may be required to send additional information to the peer AMP Manager. This information is packaged in a variable size AMP_Assoc structure. The exact length and format of the AMP_Assoc structure shall be defined in each AMP PAL specification.

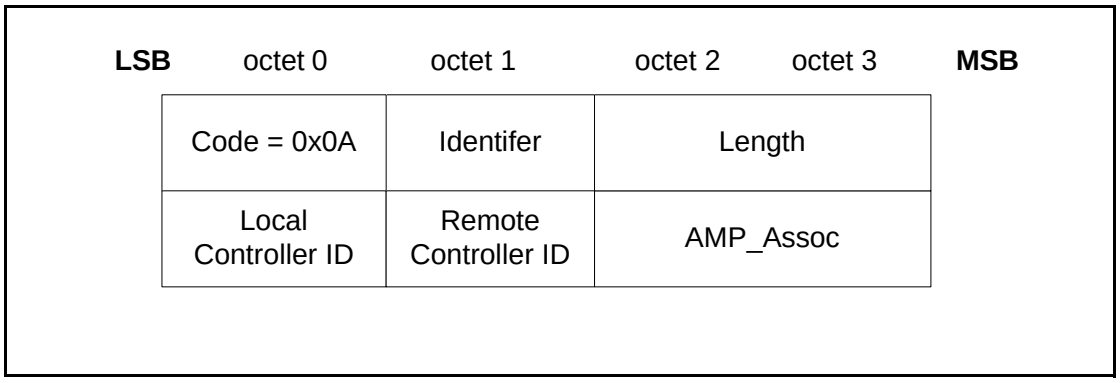

Figure 3.13: AMP Create Physical Link Request Packet

- *Local Controller ID (1 octet)*

  Local Controller ID is the ID of the Controller to be used on the device sending the AMP Create Physical Request packet.

- *Remote Controller ID (1 octet)*

  The ID of the AMP Controller to use on the device that receives the AMP Create Physical Link Request packet. The sender of the AMP Create Physical Link Request packet obtains the Remote Controller ID from the latest

Discover Response, or the Change Notify packet received from the peer AMP Manager.

- *AMP_Assoc structure (from 0 to (A2MP MTU - 6) octets)*

  AMP_Assoc structure is variable in length. See section 3.10 for a description of AMP_Assoc structure.

3.12 AMP CREATE PHYSICAL LINK RESPONSE (CODE 0X0B)

For each AMP Create Physical Link Request the AMP Manager shall reply with an AMP Create Physical Link Response packet. If the device has sent its own AMP Create Physical Link Request to create a physical link with the same AMP Controller a collision has occurred and one of the requests shall be rejected while the other request shall proceed. The algorithm described in Section 3.15 shall be used to determine which request to reject.

When the AMP Manager receives an AMP Create Physical Link Request packet it shall try to perform the requested actions and send a response identifying the status of the operation.

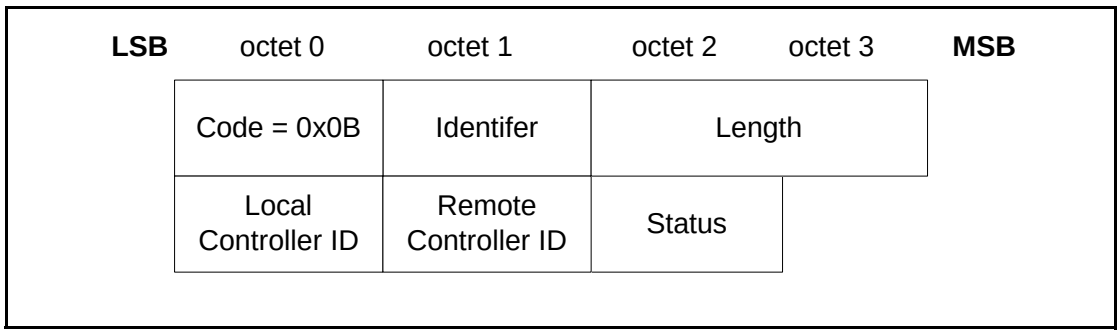

Figure 3.14: AMP Create Physical Link Response Packet

The data fields are

- *Local Controller ID (1 octet)*

  This field contains the Controller ID local to the sender of the AMP Create Physical Link Response packet. The ID value is the same as the Remote Controller ID that was in the associated AMP Create Physical Link Request packet.

- *Responder Controller ID (1 octet)*

  This field contains the Controller ID used by the receiver of the AMP Create Physical Link Response packet. The ID value is the same as the Local Controller ID that was in the associated AMP Create Physical Link Request packet.

- *Status (1 octet)*

  The Status field indicates the result of the request.

Status Code	Description
0x00	Success - Link creation is started
0x01	Invalid Controller ID.
0x02	Failed - Unable to start link creation
0x03	Failed - Collision Occurred
0x04	Failed - AMP Disconnected Physical Link Request packet received
0x05	Failed - Physical Link Already Exists
0x06	Failed - Security violation
Other	Reserved

Table 3.8: AMP Create Physical Link Response Status values

An AMP Create Physical Link Response with status of Invalid Controller ID shall be sent by an AMP manager that has received an AMP Create Physical Link Request containing either

a) A Controller ID that has not been allocated by the AMP manager

b) A Controller ID of 0

An AMP Create Physical Link Response with status of Failed - Security Violation shall be sent by an AMP manager that has received an AMP Create Physical Link Request without mutual authentication being performed over the BR/EDR Controller and without encryption being enabled on the BR/EDR Controller.

3.13 AMP DISCONNECT PHYSICAL LINK REQUEST (CODE 0X0C)

AMP Disconnect Physical Link request is an optional request that can be used by either initiator or responder to either abort the creation of an AMP physical link or disconnect an existing Physical Link.

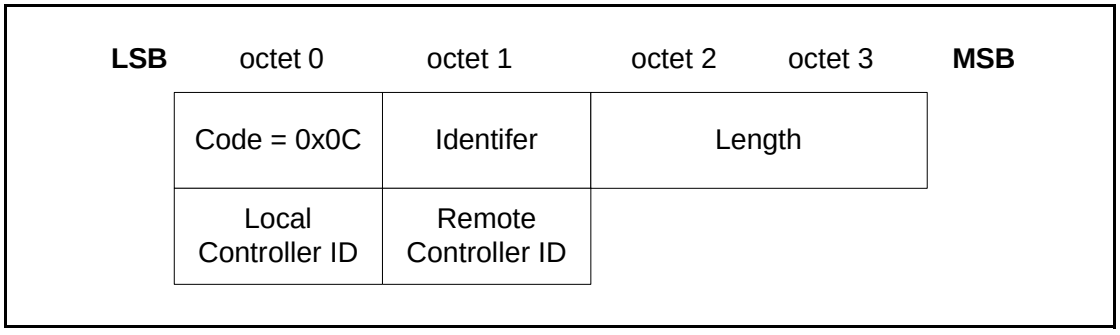

Figure 3.15: AMP Disconnect Physical Link Request Packet

The data fields are:

- *Local Controller ID (1 octet)*

Local Controller ID is the ID of the Controller on the device sending the AMP Disconnect Physical Link Request packet.

- *Remote Controller ID (1 octet)*

  The ID of the AMP Controller on the device that receives the AMP Disconnect Physical Link Request packet.

3.14 AMP DISCONNECT PHYSICAL LINK RESPONSE (CODE 0X0D)

If an AMP Manager receives an AMP Disconnect Physical Link request packet while creation of a physical link is outstanding, it shall abort the operation. In devices that support HCI the Host may send an HCI_Disconnect_Physical_Link command to cause the controller to abort the creation of a Physical Link.

If an AMP Disconnect Physical Link request packet is received from a device that has an AMP Create Physical Link request packet outstanding, the receiver shall send both an AMP Create Physical Link Response packet with a status of 'Failed - AMP Disconnected Physical Link Request packet received' and an AMP Disconnect Physical Link response packet with a status of 'Success'.

If an AMP manager receives an AMP Disconnect Physical Link request packet when creation of a physical link is not outstanding and a Physical Link does not exist for the given local and remote AMP IDs it shall send an AMP Disconnect Physical Link Response with a status of 'Failed - No Physical Link exists and no Physical Link creation is in progress'.

The status of 'Invalid Controller ID' shall only be used if the receiver of the AMP Disconnect Request packet does not have an AMP with an ID that matches the Remote Controller ID in the received AMP Disconnect Request packet.

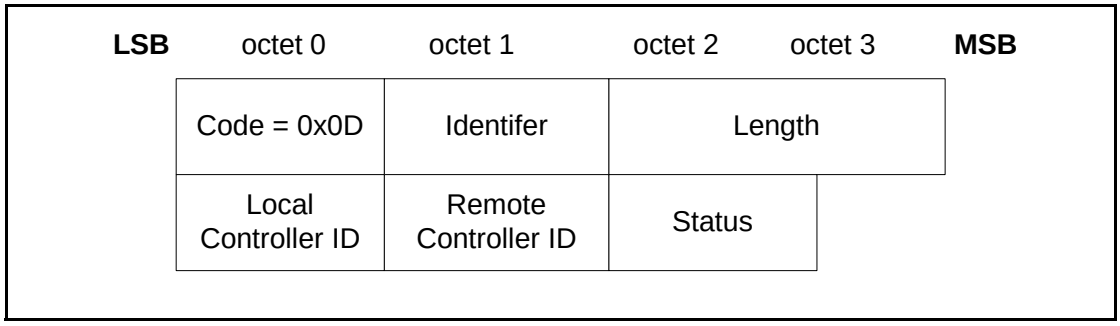

Figure 3.16: AMP Disconnect Physical Link Response Packet

The data fields are:

- *Local Controller ID (1 octet)*

  This field contains the Controller ID local to the sender of the AMP Disconnect Physical Link Response packet. The ID value is the same as the

Remote Controller ID that was in the associated AMP Disconnect Physical Link Request packet.

- *Remote Controller ID (1 octet)*

  This field contains the Controller ID used by the receiver of the AMP Disconnect Physical Link Response packet. The ID value is the same as the Local Controller ID that was in the associated AMP Disconnect Physical Link Request packet.

- *Status (1 octet)*

  The Status field indicates the result of the request.

Status Code	Description
0x00	Success
0x01	Invalid Controller ID.
0x02	Failed - No Physical Link exists and no Physical Link creation is in progress.
Other	Reserved

Table 3.9: AMP Disconnect Physical Link Response Status values

3.15 CREATE PHYSICAL LINK COLLISION RESOLUTION

If two devices simultaneously attempt to create a physical link a collision will occur. In this situation one of the requests shall be canceled while the other request shall proceed. Both devices must know which request will be rejected. The following algorithm shall be used by both devices to determine which request to reject.

1. Set i=0 (representing the least significant octet of the BD_ADDR)
2. Compare the least significant octet, octet[i] of the BD_ADDR, of both devices. If the octets are not equal go to step 4.
3. Increment i by 1. Go to step 2.
4. The device with the larger BD_ADDR octet shall send an AMP Create Physical Link Response with the Status field set to "Failed - Collision Occurred."

3.16 RESPONSE TIMEOUT

The Response Timeout is used to monitor the response to request packets. The exact timeout value is implementation dependent and may be chosen within the range of 15 - 60 seconds. The recommended value is 20 seconds. If a response to a request packet is not received within the Response Timeout then the ACL link shall be disconnected.

3.17 UNEXPECTED BR/EDR PHYSICAL LINK DISCONNECT

It is possible that the BR/EDR link between two devices might unexpectedly disconnect (Link Supervision Timeout) while AMP links between the same two devices remain active. This situation is problematic since the BR/EDR link is used for L2CAP and AMP Manager signaling between the two devices.

When the BR/EDR link with a remote device unexpectedly disconnects due to Link Supervision Timeout the AMP manager shall disconnect all AMP physical links to the same remote device.

FIGURES

Figure 2.1: Overview of the Lower Software Layers 367
Figure 2.2: AMP Manager Peers 368
Figure 3.1: AMP Manager Protocol Packet Format 372
Figure 3.2: AMP Command Reject Packet 374
Figure 3.3: AMP Discover Request Packet 374
Figure 3.4: Example A2MP Extended Feature Mask 375
Figure 3.5: AMP Discover Response Packet 376
Figure 3.6: Controller list format 377
Figure 3.7: AMP Change Notify Packet 379
Figure 3.8: AMP Change Response Packet 380
Figure 3.9: AMP Get Info Request Packet 380
Figure 3.10: AMP Get Info Response Packet 381
Figure 3.11: AMP Get AMP Assoc Request Packet 382
Figure 3.12: AMP Get AMP Assoc Response Packet 383
Figure 3.13: AMP Create Physical Link Request Packet 384
Figure 3.14: AMP Create Physical Link Response Packet 385
Figure 3.15: AMP Disconnect Physical Link Request Packet 386
Figure 3.16: AMP Disconnect Physical Link Response Packet 387

TABLES

Table 2.1: AMP Manager Channel configuration parameters 368
Table 2.2: AMP Manager Channel Enhanced Retransmission Mode parameters 369
Table 3.1: Codes 372
Table 3.2: Identifier 373
Table 3.3: AMP Command Reject reasons 374
Table 3.4: A2MP Extended Feature Mask 375
Table 3.5: Controller Status 379
Table 3.6: AMP Get Info Response Status values 381
Table 3.7: AMP Create Physical Link Response Status values 383
Table 3.8: AMP Create Physical Link Response Status values 386
Table 3.9: AMP Disconnect Physical Link Response Status values 388

Specification Volume 4

SPECIFICATION OF THE *BLUETOOTH* SYSTEM

Wireless Connections Made Easy

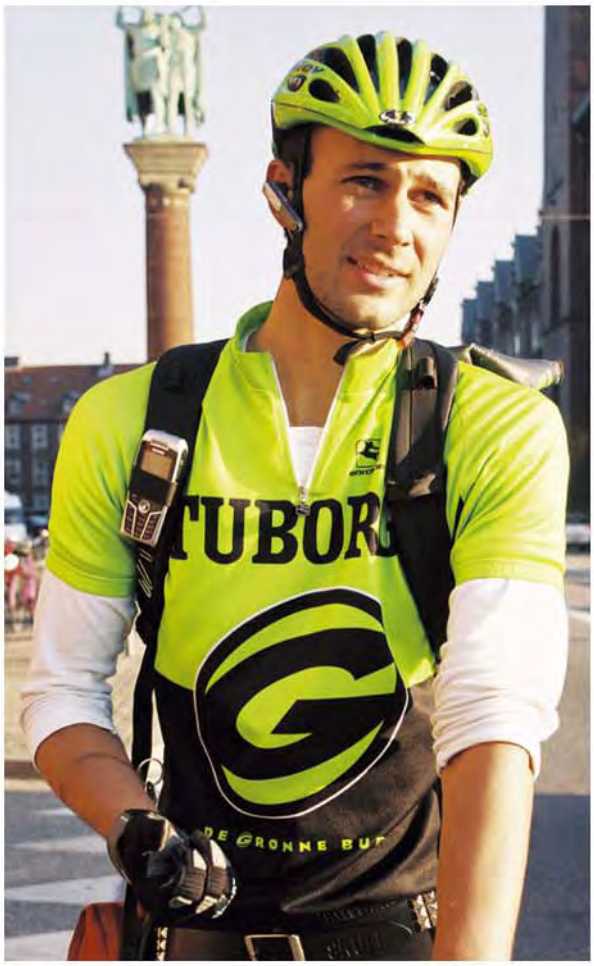

Host Controller Interface

[Transport Layer]

Covered Core Package version:
3.0 + HS

Bluetooth®

Revision History

The Revision History is shown in the “Appendix” on page 47[vol. 0].

Contributors

The persons who contributed to this specification are listed in the Appendix.

Web Site

This specification can also be found on the official Bluetooth web site:
http://www.bluetooth.com

Disclaimer and Copyright Notice

The copyright in these specifications is owned by the Promoter Members of Bluetooth SIG, Inc. (“Bluetooth SIG”). Use of these specifications and any related intellectual property (collectively, the “Specification”), is governed by the Promoters Membership Agreement among the Promoter Members and Bluetooth SIG (the “Promoters Agreement”), certain membership agreements between Bluetooth SIG and its Adopter and Associate Members (the “Membership Agreements”) and the Bluetooth Specification Early Adopters Agreements (“1.2 Early Adopters Agreements”) among Early Adopter members of the unincorporated Bluetooth special interest group and the Promoter Members (the “Early Adopters Agreement”). Certain rights and obligations of the Promoter Members under the Early Adopters Agreements have been assigned to Bluetooth SIG by the Promoter Members.

Use of the Specification by anyone who is not a member of Bluetooth SIG or a party to an Early Adopters Agreement (each such person or party, a “Member”), is prohibited. The legal rights and obligations of each Member are governed by their applicable Membership Agreement, Early Adopters Agreement or Promoters Agreement. No license, express or implied, by estoppel or otherwise, to any intellectual property rights are granted herein.

Any use of the Specification not in compliance with the terms of the applicable Membership Agreement, Early Adopters Agreement or Promoters Agreement is prohibited and any such prohibited use may result in termination of the applicable Membership Agreement or Early Adopters Agreement and other liability permitted by the applicable agreement or by applicable law to Bluetooth SIG or any of its members for patent, copyright and/or trademark infringement.

THE SPECIFICATION IS PROVIDED “AS IS” WITH NO WARRANTIES WHATSOEVER, INCLUDING ANY WARRANTY OF MERCHANTABILITY, NONINFRINGEMENT, FITNESS FOR ANY PARTICULAR PURPOSE, SATISFACTORY QUALITY, OR REASONABLE SKILL OR CARE, OR ANY WARRANTY ARISING OUT OF ANY COURSE OF DEALING, USAGE, TRADE PRACTICE, PROPOSAL, SPECIFICATION OR SAMPLE.

Each Member hereby acknowledges that products equipped with the Bluetooth® technology (“Bluetooth® Products”) may be subject to various regulatory controls under the laws and regulations of various governments worldwide. Such laws and regulatory controls may govern, among other things, the combination, operation, use, implementation and distribution of Bluetooth® Products. Examples of such laws and regulatory controls include, but are not limited to, airline regulatory controls, telecommunications regulations, technology transfer controls and health and safety regulations. Each Member is solely responsible for the compliance by their Bluetooth® Products with any such laws and regulations and for obtaining any and all required authorizations, permits, or licenses for their Bluetooth® Products related to such regulations within the applicable jurisdictions. Each Member acknowledges that nothing in the Specification provides any information or assistance in connection with securing such compliance, authorizations or licenses. NOTHING IN THE SPECIFICATION CREATES ANY WARRANTIES, EITHER EXPRESS OR IMPLIED, REGARDING SUCH LAWS OR REGULATIONS.

ALL LIABILITY, INCLUDING LIABILITY FOR INFRINGEMENT OF ANY INTELLECTUAL PROPERTY RIGHTS OR FOR NONCOMPLIANCE WITH LAWS, RELATING TO USE OF THE SPECIFICATION IS EXPRESSLY DISCLAIMED. BY USE OF THE SPECIFICATION, EACH MEMBER EXPRESSLY WAIVES ANY CLAIM AGAINST BLUETOOTH SIG AND ITS PROMOTER MEMBERS RELATED TO USE OF THE SPECIFICATION.

Bluetooth SIG reserves the right to adopt any changes or alterations to the Specification as it deems necessary or appropriate.

Copyright © 1999–2009

Ericsson AB,
Lenovo,
Intel Corporation,
Microsoft Corporation,
Motorola, Inc.,
Nokia Corporation,
Toshiba Corporation

*Third-party brands and names are the property of their respective owners.

CONTENTS

Part A
UART TRANSPORT LAYER

Contents 11

1 General 13

2 Protocol 14

3 RS232 Settings 15

4 Error Recovery 16

Part B
USB TRANSPORT LAYER

Contents 19

1 Overview 21

2 USB Endpoint Expectations 25
2.1 Descriptor Overview 25
2.1.1 BR/EDR Controller Descriptors 25
2.1.2 AMP Controller Descriptors 30
2.2 Control Endpoint Expectations 31
2.2.1 Single Function BR/EDR Controller 31
2.2.2 BR/EDR Controller Function in a Composite Device 31
2.2.3 AMP Controller 32
2.3 Bulk Endpoints Expectations 32
2.4 Interrupt Endpoint Expectations 33
2.5 Isochronous Endpoints Expectations 33

3 Class Code 34
3.1 Bluetooth Codes 34
3.1.1 Single Function BR/EDR Controller 34
3.1.2 Single Function AMP Controller 34
3.1.3 Composite Bluetooth BR/EDR and AMP Controller 34
3.1.4 Composite Device Including Bluetooth BR/EDR and AMP Controller 35

4 Device Firmware Upgrade 36

5 Limitations 37
5.1 Power Specific Limitations 37
5.2 Other Limitations 37

6 Bluetooth Composite Device Implementation 38

6.1 Configurations 38
6.2 Using USB Interface Association Descriptors for a BR/EDR Controller Function 38
6.3 Combined BR/EDR Controller Function and Single AMP Controller Function 39

7 References 43

Part C
SECURE DIGITAL (SD) TRANSPORT LAYER

Contents 47

1 Introduction 48

2 Goals 49
2.1 Hardware Goals 49
2.2 Software Goals 49
2.3 Configuration Goals 50
2.4 Configuration for Multiple Controllers 50

3 Physical Interface Documents 51

4 Communication 52
4.1 Overview 52

5 Appendix A - Acronyms and Abbreviations 53

6 Appendix B - Related Documents 54

7 Appendix C - Tests 55
7.1 Test Suite Structure 55

Part D
THREE-WIRE UART TRANSPORT LAYER

Contents 59

1 General 61

2 Overview 62

3 Slip Layer 63
3.1 Encoding a Packet 63
3.2 Decoding a Packet 63

4 Packet Header 65
4.1 Sequence Number 65
4.2 Acknowledge Number 66
4.3 Data Integrity Check Present 66
4.4 Reliable Packet 66
4.5 Packet Type 66
4.6 Payload Length 67

4.7 Packet Header Checksum 67
5 Data Integrity Check 68
5.1 16 Bit CCITT-CRC 68
6 Reliable Packets 69
6.1 Header Checksum Error 69
6.2 Slip Payload Length Error 69
6.3 Data Integrity Check Error 69
6.4 Out Of Sequence Packet Error 69
6.5 Acknowledgement 70
6.6 Resending Packets 70
6.7 Example Reliable Packet Flow 70
7 Unreliable Packets 73
7.1 Unreliable Packet Header 73
7.2 Unreliable Packet Error 73
8 Link Establishment 74
8.1 Uninitialized State 75
8.2 Initialized State 75
8.3 Active State 75
8.4 Sync Message 76
8.5 Sync Response Message 76
8.6 Config Message 76
8.7 Config Response Message 77
8.8 Configuration Field 77
8.8.1 Configuration Messages 78
8.8.2 Sliding Window Size 78
8.8.3 Level of Data Integrity Check 78
8.8.4 Out of Frame Software Flow Control 79
8.8.5 Version Number 79
9 LOW POWER 80
9.1 Wakeup Message 80
9.2 Woken Message 80
9.3 Sleep Message 81
10 Out of Frame Control 82
10.1 Software Flow Control 82
11 Hardware Configuration 83
11.1 Wires 83
11.1.1 Transmit & Receive 83
11.1.2 Ground 83
11.2 Hardware Flow 83
11.2.1 RTS & CTS 83

12 Recommended Parameters 84
12.1 Timing Parameters 84
12.1.1 Acknowledgement of Packets 84
12.1.2 Resending Reliable Packets 84
13 References 85

Host Controller Interface [Transport Layer]
Part A

UART TRANSPORT LAYER

This document describes the UART transport layer (between the Host and the Host Controller). HCI command, event, and data packets flow through this layer, but the layer does not decode them.

CONTENTS

1 General 13
2 Protocol 14
3 RS232 Settings 15
4 Error Recovery 16

1 GENERAL

The objective of this HCI UART Transport Layer is to make it possible to use the Bluetooth HCI over a serial interface between two UARTs on the same PCB. The HCI UART Transport Layer assumes that the UART communication is free from line errors.

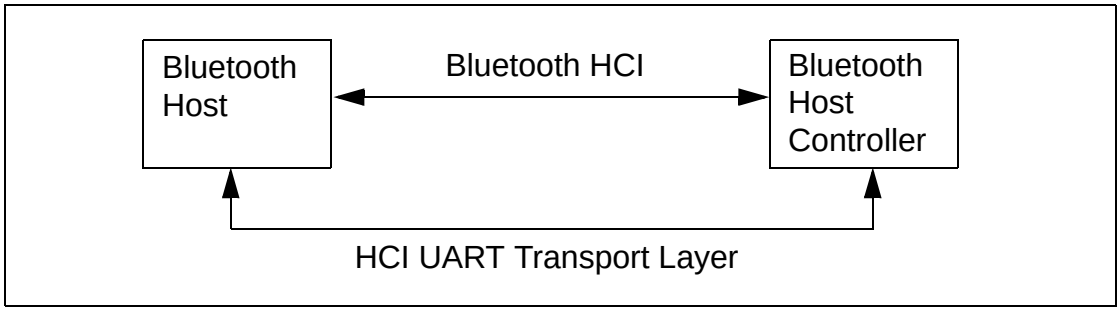

Figure 1.1: HCI UART Transport Layer

2 PROTOCOL

There are four kinds of HCI packets that can be sent via the UART Transport Layer; i.e. HCI Command Packet, HCI Event Packet, HCI ACL Data Packet and HCI Synchronous Data Packet (see "Host Controller Interface Functional Specification" in Volume 2, Part E). HCI Command Packets can only be sent to the Bluetooth Host Controller, HCI Event Packets can only be sent from the Bluetooth Host Controller, and HCI ACL/Synchronous Data Packets can be sent both to and from the Bluetooth Host Controller.

HCI does not provide the ability to differentiate the four HCI packet types. Therefore, if the HCI packets are sent via a common physical interface, a HCI packet indicator has to be added according to Table 2.1 below.

HCI packet type	HCI packet indicator
HCI Command Packet	0x01
HCI ACL Data Packet	0x02
HCI Synchronous Data Packet	0x03
HCI Event Packet	0x04

Table 2.1: HCI packet indicators

The HCI packet indicator shall be sent immediately before the HCI packet. All four kinds of HCI packets have a length field, which is used to determine how many bytes are expected for the HCI packet. When an entire HCI packet has been received, the next HCI packet indicator is expected for the next HCI packet. Over the UART Transport Layer, only HCI packet indicators followed by HCI packets are allowed.

3 RS232 SETTINGS

The HCI UART Transport Layer uses the following settings for RS232:

Baud rate:	**manufacturer-specific**
Number of data bits:	8
Parity bit:	no parity
Stop bit:	1 stop bit
Flow control:	RTS/CTS
Flow-off response time:	manufacturer specific

Table 3.1:

Flow control with RTS/CTS is used to prevent temporary UART buffer overrun. It should not be used for flow control of HCI, since HCI has its own flow control mechanisms for HCI commands, HCI events and HCI data.

If CTS is 1, then the Host/Host Controller is allowed to send.
If CTS is 0, then the Host/Host Controller is not allowed to send.

The flow-off response time defines the maximum time from setting RTS to 0 until the byte flow actually stops.

The RS232 signals should be connected in a null-modem fashion; i.e. the local TXD should be connected to the remote RXD and the local RTS should be connected to the remote CTS and vice versa.

4 ERROR RECOVERY

If the Host or the Host Controller lose synchronization in the communication over RS232, then a reset is needed. A loss of synchronization means that an incorrect HCI packet indicator has been detected, or that the length field in an HCI packet is out of range.

If the UART synchronization is lost in the communication from Host to Host Controller, then the Host Controller shall send a Hardware Error Event to tell the Host about the synchronization error. The Host Controller will then expect to receive an HCI_Reset command from the Host in order to perform a reset. The Host Controller will also use the HCI_Reset command in the byte stream from Host to Host Controller to re-synchronize.

If the UART synchronization is lost in the communication from Host Controller to Host, then the Host shall send the HCI_Reset command in order to reset the Host Controller. The Host shall then re-synchronize by looking for the HCI Command Complete event for the HCI_Reset command in the byte stream from Host Controller to Host.

See “Host Controller Interface Functional Specification” for HCI commands and HCI events in the Bluetooth Specification v1.2 or later.

Host Controller Interface [Transport Layer]
Part B

USB TRANSPORT LAYER

This document describes the USB transport layer (between a host and the host controller). HCI commands flow through this layer, but the layer does not decode the commands.

CONTENTS

1 Overview 21

2 USB Endpoint Expectations 25

2.1 Descriptor Overview 25

2.1.1 BR/EDR Controller Descriptors 25

2.1.2 AMP Controller Descriptors 30

2.2 Control Endpoint Expectations 31

2.2.1 Single Function BR/EDR Controller 31

2.2.2 BR/EDR Controller Function in a Composite Device 31

2.2.3 AMP Controller 32

2.3 Bulk Endpoints Expectations 32

2.4 Interrupt Endpoint Expectations 33

2.5 Isochronous Endpoints Expectations 33

3 Class Code 34

3.1 Bluetooth Codes 34

3.1.1 Single Function BR/EDR Controller 34

3.1.2 Single Function AMP Controller 34

3.1.3 Composite Bluetooth BR/EDR and AMP Controller 34

3.1.4 Composite Device Including Bluetooth BR/EDR and AMP Controller 35

4 Device Firmware Upgrade 36

5 Limitations 37

5.1 Power Specific Limitations 37

5.2 Other Limitations 37

6 Bluetooth Composite Device Implementation 38

6.1 Configurations 38

6.2 Using USB Interface Association Descriptors for a BR/EDR Controller Function 38

6.3 Combined BR/EDR Controller Function and Single AMP Controller Function 39

7 References 43

1 OVERVIEW

This document discusses the requirements of the Universal Serial Bus (USB) interface for Bluetooth hardware. Readers should be familiar with USB, USB design issues, Advanced Configuration Power Interface (ACPI), the overall Bluetooth architecture, and the basics of the radio interface.

The reader should also be familiar with the Bluetooth Host Controller Interface.

Referring to Figure 1.1 through Figure 1.3, notice that this document discusses the implementation details of the two-way arrow labeled “USB Function.”

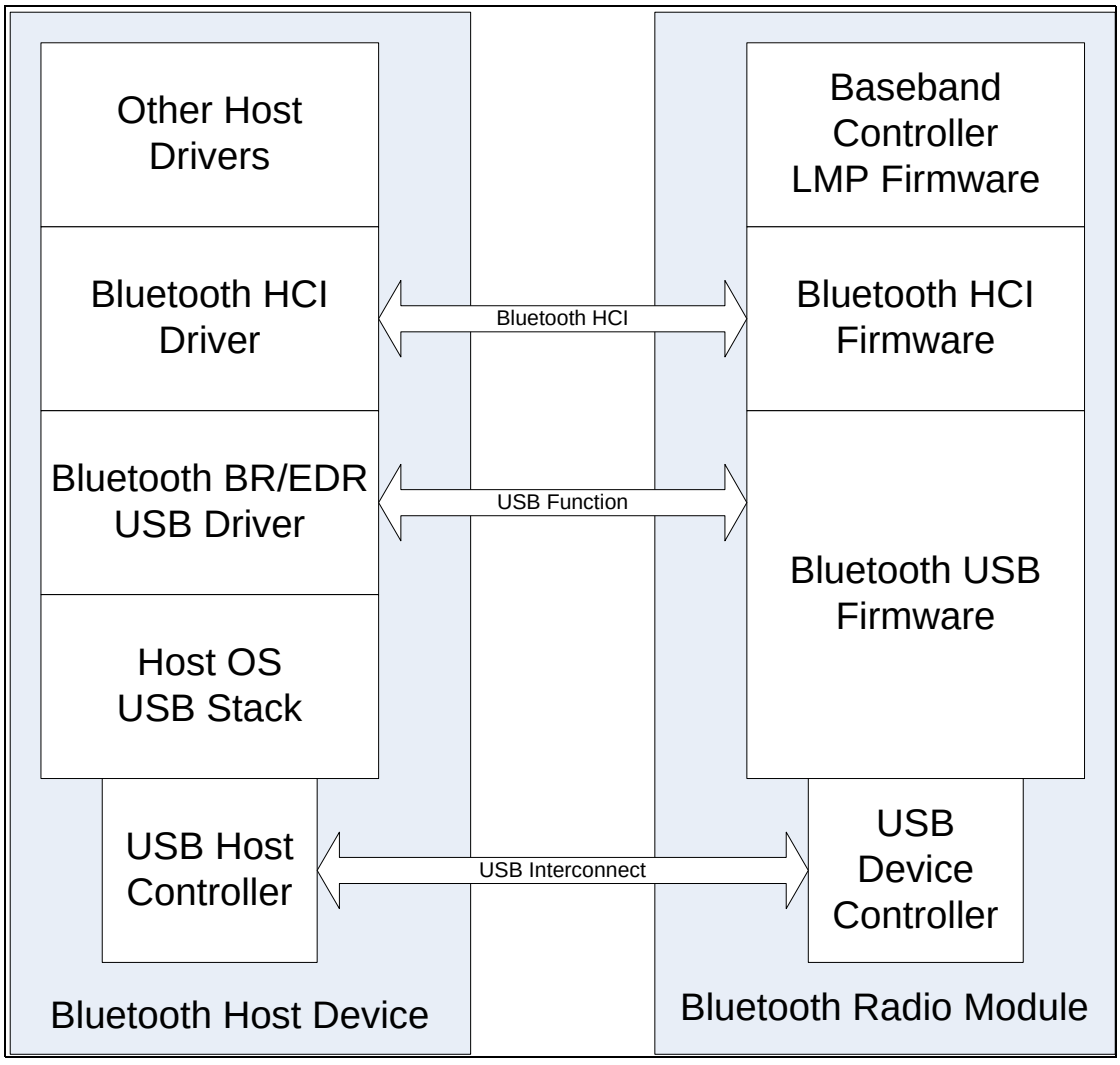

Figure 1.1: Relationship between the Host and BR/EDR Radio Module

This document also specifies implementation of two other configurations:

- USB-connected AMP controller (PAL, MAC, PHY)
- USB-connected composite (multifunction) device that combines a BR/EDR controller and an AMP controller.

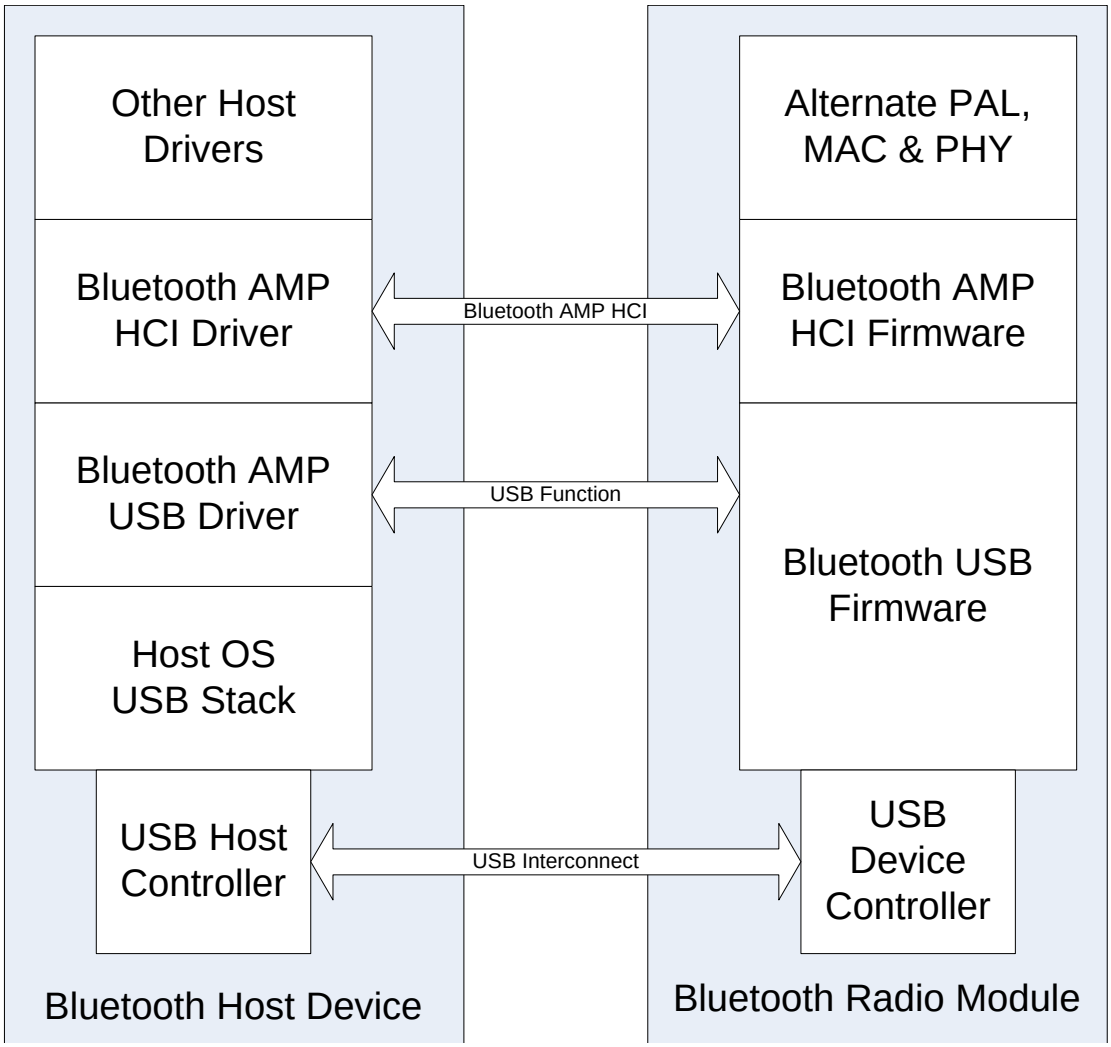

Figure 1.2: Relationship between the Host and an AMP Controller

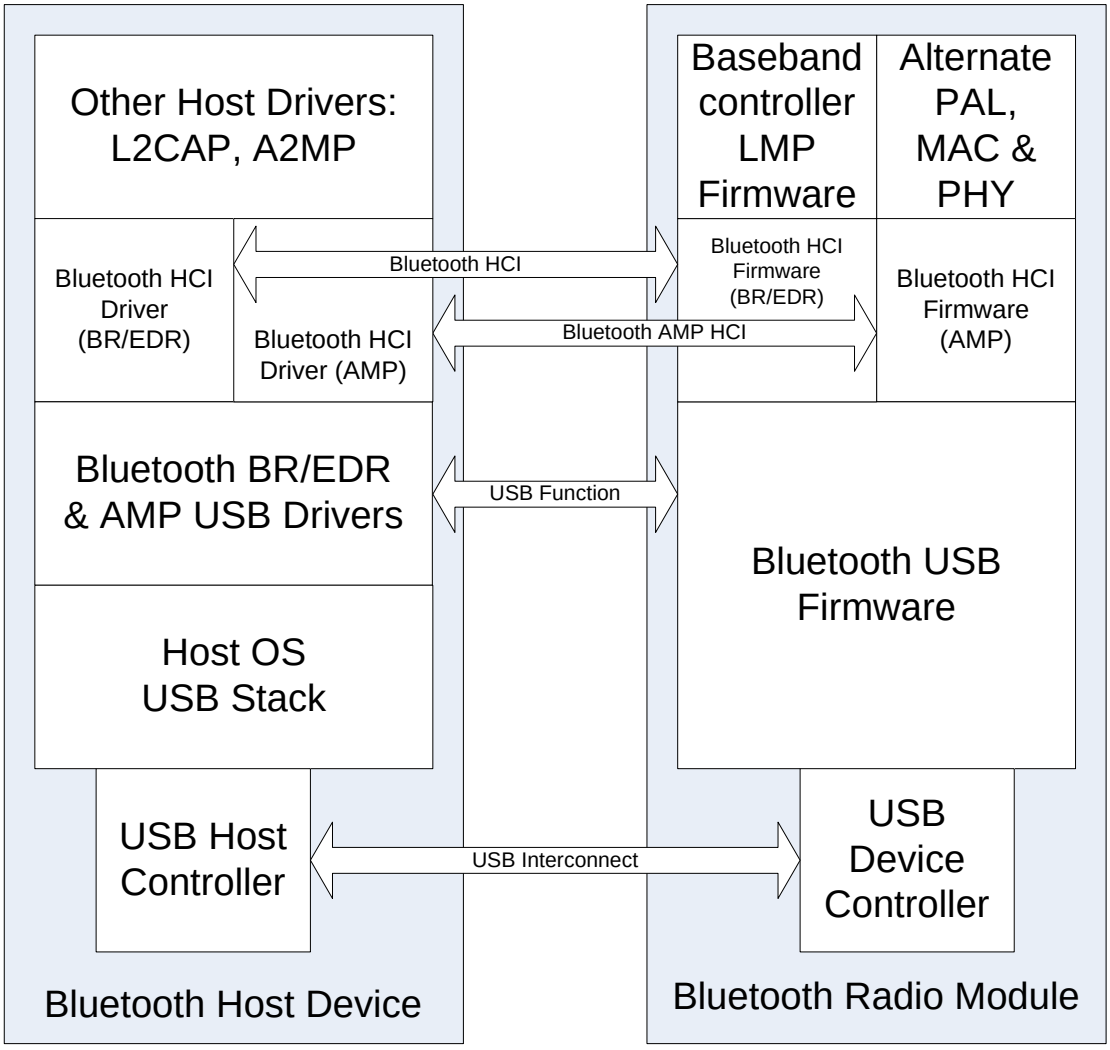

Figure 1.3: Relationship between Host and a Composite BR/EDR and AMP Controller

The USB hardware can be embodied in one of several ways:

1. As a USB dongle (e.g. cabled USB)
2. As a USB module integrated into the product and connected internally via a cable or connector
3. Integrated onto the motherboard of a notebook PC or other device and connected via circuit board traces with standard USB, Inter-Chip USB or High Speed Inter-Chip USB
4. Integrated as a subsystem on a single-chip System-on-Chip (SoC) design connected on-chip as part of a compound device.

Finally, for an overview of the connection that is established between two Bluetooth devices, reference Figure 1.4 .

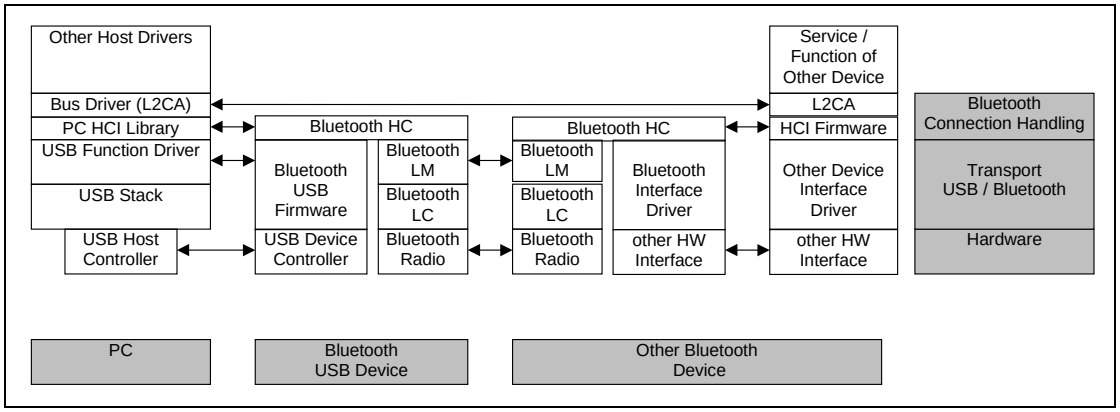

Figure 1.4: Flow of data from one Bluetooth device to another

2 USB ENDPOINT EXPECTATIONS

This section outlines specific USB endpoints that are required in order to function properly with the host. This section assumes a basic familiarity with USB. The endpoint numbers (labeled 'Suggested Endpoint Address' below) may be dynamically recognized upon driver initialization – this depends on the implementation.

2.1 DESCRIPTOR OVERVIEW

The USB device is intended for high speed. USB defines several physical layers, ranging from 1.5 Mbps to several Gbps of bus bandwidth. A Bluetooth USB device should provide a USB transport with sufficient bus bandwidth to support the Bluetooth radio transports included in the device.

There are two USB controller types:

- BR/EDR Controller
- AMP Controller

2.1.1 BR/EDR Controller Descriptors

The BR/EDR Controller configuration consists of two interfaces. The first interface has no alternate settings and contains the bulk and interrupt endpoints. The second interface provides scalable isochronous bandwidth consumption. The second interface has four alternate settings that provide different consumption based on the required isochronous bandwidth. The default interface is empty so that the device is capable of scaling down to no isochronous bandwidth.

An HCI packet, consisting of an HCI header and HCI data, shall be contained in one USB Transfer. A USB Transfer is defined as one or more USB Transactions that contain the data from one IO request. For example, an ACL data packet containing 256 bytes (both HCI header and HCI data) would be sent over the bulk endpoint in one IO request. That IO request will require four 64-byte full speed USB Transactions or a single 256-byte High-speed USB Transaction, and forms a Transfer.

The endpoints are spread across two interfaces so that when adjusting isochronous bandwidth consumption (via select interface calls), any pending bulk and/or interrupt transactions do not have to be terminated and resubmitted.

The following table outlines the required configuration.

Interface Number	Alternate Setting	Suggested Endpoint Address	Endpoint Type	Suggested Max Packet Size
HCI Commands				
0	0	0x00	Control	8/16/32/64
HCI Events				
0	0	0x81	Interrupt (IN)	16
ACL Data				
0	0	0x82	Bulk (IN)	32/64
0	0	0x02	Bulk (OUT)	32/64
No active voice channels (for USB compliance)				
1	0	0x83	Isoch (IN)	0
1	0	0x03	Isoch (OUT)	0
One voice channel with 8-bit encoding				
1	1	0x83	Isoch (IN)	9
1	1	0x03	Isoch (OUT)	9
Two voice channels with 8-bit encoding & One voice channel with 16-bit encoding				
1	2	0x83	Isoch (IN)	17
1	2	0x03	Isoch (OUT)	17
Three voice channels with 8-bit encoding				
1	3	0x83	Isoch (IN)	25
1	3	0x03	Isoch (OUT)	25
Two voice channels with 16-bit encoding				
1	4	0x83	Isoch (IN)	33
1	4	0x03	Isoch (OUT)	33
Three voice channels with 16-bit encoding				
1	5	0x83	Isoch (IN)	49
1	5	0x03	Isoch (OUT)	49

Table 2.1: USB BR/EDR firmware interface and endpoint settings

The following two examples are used to demonstrate the flow of data given the described endpoints.

Number of voice channels	Duration of voice data	Encoding
One	3 ms per IO Request	8-bit

Time (ms	USB data (header refers to HCI header) (Receive & Send from the host)	Queued data (read / write)	Time (ms)	Air data	Amount Received/ Sent (ms)
0	Receive 0 bytes Send 9 bytes (3 header, 6 data)	0 / 6	0	Send 0	0 / 0
		10 / 6	0.625	Receive 10	1.25 / 0
1	Receive 0 bytes Send 9 bytes (9 bytes HCI data)	10 / 15	1.25	Send 0	1.25 / 0
		20 / 15	1.875	Receive 10	2.50 / 0
2	Receive 0 bytes Send 9 bytes (9 bytes HCI data)	20 / 24	2.50	Send 0	2.50 / 0
		30 / 24	3.125	Receive 10	3.75 / 0
3	Receive 9 bytes (3 header, 6 data) Send 9 bytes (3 header, 6 data)	24 / 20	3.75	Send 10	3.75 / 1.25
4	Receive 9 bytes (9 bytes data) Send 9 bytes (9 bytes HCI data)	25 / 29	4.375	Receive 10	5.0 / 1.25
5	Receive 9 bytes (9 bytes data) Send 9 bytes (9 bytes HCI data)	16 / 28	5.0	Send 10	5.0 / 2.50
		26 / 28	5.625	Receive 10	6.25 / 2.50
6	Receive 9 bytes (3 header, 6 data) Send 9 bytes (3 header, 6 data)	20 / 24	6.25	Send 10	6.25 / 3.75
		30 / 24	6.875	Receive 10	7.5 / 3.75
7	Receive 9 bytes (9 bytes data) Send 9 bytes (9 bytes HCI data)	21 / 23	7.5	Send 10	7.5 / 5.0
8	Receive 9 bytes (9 bytes data) Send 9 bytes (9 bytes HCI data)	22 / 32	8.125	Receive 10	8.75 / 5.0
		22 / 22	8.75	Send 10	8.75 / 6.25
9	Receive 9 bytes (3 header, 6 data) Send 9 bytes (3 header, 6 data)	26 / 28	9.375	Receive 10	10.0 / 6.25

Table 2.2: Example USB single-channel voice traffic data flow

Time (ms	USB data (header refers to HCI header) (Receive & Send from the host)	Queued data (read / write)	Time (ms)	Air data	Amount Received/ Sent (ms)
10	Receive 9 bytes (9 bytes data) Send 9 bytes (9 bytes HCI data)	17 / 27	10	Send 10	10.0 / 7.5
		27 / 27	10.625	Receive 10	11.25 / 7.5
11	Receive 9 bytes (9 bytes data) Send 9 bytes (9 bytes HCI data)	18 / 26	11.25	Send 10	11.25 / 8.75

Table 2.2: Example USB single-channel voice traffic data flow

Convergence is expected because the radio is sending out an average of eight bytes of voice data every one ms and USB is sending eight bytes of voice data every one ms.

Number of voice channels	Duration of voice data	Encoding
Two	3 ms per IO Request	8-bit

Time (ms	USB data (header refers to HCI header) (Receive & Send from the host)	Queued data (read / write)	Time (ms)	Air data	Amount Received / Sent (ms)
0	Receive 0 bytes for Channel #1 Send 17 bytes (3 header, 14 data) for Channel #1	C1- 0/14 C2- 0/0	0	Send 0 for C1	C1- 0/0 C2- 0/0
		C1- 20/ 14 C2- 0/0	0.625	Receive 20 for C1	C1- 2.5/0 C2- 0/0
1	Receive 0 bytes for Channel #1 Send 17 bytes (17 bytes HCI data) for Channel #1	C1- 20/ 31 C2- 0/0	1.25	Send 0 for C2	C1- 2.5/0 C2- 0/0
		C1- 20/ 31 C2- 20/0	1.875	Receive 20 for C2	C1- 2.5/0 C2- 2.5/0
2	Receive 0 bytes for Channel #1 Send 17 bytes (17 bytes HCI data) for Channel #1	C1- 20/ 28 C2- 20/0	2.50	Send 20 for C1	C1- 2.5/2.5 C2- 2.5/0

Table 2.3: Example USB dual-channel voice traffic data flow

Time (ms	USB data (header refers to HCI header) (Receive & Send from the host)	Queued data (read / write)	Time (ms)	Air data	Amount Received / Sent (ms)
		C1- 40/ 28 C2- 0/0	3.125	Receive 20 for C1	C1- 5.0/2.5 C2- 2.5/0
3	Receive 0 bytes for Channel #2 Send 17 bytes (3 header, 14 data) for Channel #2	C1- 40/ 28 C2- 20/ 14	3.75	Send 0 for C2	C1- 5.0/2.5 C2- 2.5/0
4	Receive 0 bytes for Channel #2 Send 17 bytes (17 bytes HCI data) for Channel #2	C1- 40/ 28 C2- 40/ 31	4.375	Receive 20 for C2	C1- 5.0/2.5 C2- 5.0/0
5	Receive 0 bytes for Channel #2 Send 17 bytes (17 bytes HCI data) for Channel #2	C1- 40/8 C2- 40/ 48	5.0	Send 20 for C1	C1- 5.0/5.0 C2- 5.0/0
		C1- 60/8 C2- 40/ 48	5.625	Receive 20 for C1	C1- 7.5/5.0 C2- 5.0/0
6	Receive 17 bytes (3 header, 14 data) for Channel #1 Send 17 bytes (3 header, 14 data) for Channel #1	C1- 46/ 22 C2- 40/ 28	6.25	Send 20 for C2	C1- 7.5/5.0 C2- 5.0/2.5
		C1- 46/ 22 C2- 60/ 28	6.875	Receive 20 for C2	C1- 7.5/5.0 C2- 7.5/2.5
7	Receive 17 bytes (17 bytes data) for Channel #1 Send 17 bytes (17 bytes HCI data) for Channel #1	C1- 29/ 19 C2- 60/ 28	7.5	Send 20 for C1	C1- 7.5/7.5 C2- 7.5/2.5
8	Receive 17 bytes (17 bytes data) for Channel #1 Send 17 bytes (17 bytes HCI data) for Channel #1	C1- 32/ 36 C2- 60/ 28	8.125	Receive 20 for C1	C1- 10/7.5 C2- 7.5/2.5
		C1- 32/ 36 C2- 60/8	8.75	Send 20 for C2	C1- 10/7.5 C2- 7.5/5.0

Table 2.3: Example USB dual-channel voice traffic data flow

Time (ms	USB data (header refers to HCI header) (Receive & Send from the host)	Queued data (read / write)	Time (ms)	Air data	Amount Received / Sent (ms)
9	Receive 17 bytes (3 header, 14 data) for Channel #2 Send 17 bytes (3 header, 14 data) for Channel #2	C1- 32/ 36 C2- 54/ 22	9.375	Receive 20 for C2	C1- 10/7.5 C2- 10/5.0
10	Receive 17 bytes (17 bytes data) for Channel #2 Send 17 bytes (17 bytes HCI data) for Channel #2	C1- 32/ 16 C2- 37/ 39	10	Send 20 for C1	C1- 10/10 C2- 10/5.0
		C1- 52/ 16 C2- 37/ 39	10.625	Receive 20 for C1	C1- 12.5/ 10 C2- 10/5.0
11	Receive 17 bytes (17 bytes data) for Channel #2 Send 17 bytes (17 bytes HCI data) for Channel #2	C1- 52/ 16 C2- 20/ 36	11.25	Send 20 for C2	C1- 12.5/ 10 C2- 10/7.5

Table 2.3: Example USB dual-channel voice traffic data flow

2.1.2 AMP Controller Descriptors

The AMP Controller configuration consists of one interface. That interface (interface N - see device descriptors) has no alternate settings and contains the bulk and interrupt endpoints.

An HCI packet, consisting of an HCI header and HCI data, shall be contained in one USB transfer.

Interface Number	Alternate Setting	Suggested Endpoint Address	Endpoint Type	Suggested Max Packet Size
HCI Commands				
N	0	0x00	Control	64
HCI Events				
N	0	0x81	Interrupt (IN)	512
AMP Data				
N	0	0x82	Bulk (IN)	512
N	0	0x02	Bulk (OUT)	512

Table 2.4: USB AMP firmware interface and endpoint settings

NOTE: Endpoint addresses are reported by the device in the Endpoint Descriptors.

2.2 CONTROL ENDPOINT EXPECTATIONS

Endpoint 0 is used to configure and control the USB device. Endpoint 0 will also be used to allow the host to send HCI-specific commands to the host controller.

All HCI Control Packets delivered to Endpoint 0 are addressed in the Setup Data structure (See 9.3 of [2]). This structure contains fields which determine the destination within the device. The bmRequestType can be used to select the Device or the Interface. If Interface is selected, the wIndex parameter must select the Index for the targeted Bluetooth controller.

2.2.1 Single Function BR/EDR Controller

For a single function BR/EDR Controller, the Host should address HCI command packets to the Device. HCI command packets should be sent with the following parameters:

Parameter	Value	description
bmRequestType	0x20	Host-to-device class request, device as target
bRequest	0x00	
wValue	0x00	
wIndex	0x00	

Table 2.5: HCI command packet addressing for single-function BR/EDR controllers

Note: for historical reasons, if the BR/EDR Controller firmware receives a packet over this endpoint, it should treat the packet as an HCI command packet regardless of the value of bRequest, wValue and wIndex. Some Host devices set bRequest to 0xE0.

2.2.2 BR/EDR Controller Function in a Composite Device

For a BR/EDR Controller included in a composite (multi-function) device, the host should address HCI control packets to the Interface of the BR/EDR controller. HCI command packets should be sent with the following parameters:

Parameter	Value	description
bmRequestType	0x21	Host-to-Interface class request, interface as target
bRequest	0x00	
wValue	0x00	

Table 2.6: HCI command packet addressing for composite device BR/EDR Controllers

Parameter	Value	description
wIndex	IF#	This is the actual Interface number within the composite device.

Table 2.6: HCI command packet addressing for composite device BR/EDR Controllers

If the Host system driver addresses USB requests containing BR/EDR HCI command packets to the Device (see Section 2.2.1) instead of to the Interface, the device implementation shall recognize these HCI command packets and correctly route them to the BR/EDR function, to ensure correct operation of the BR/EDR function and avoid malfunctions in other functions contained in the composite device.

2.2.3 AMP Controller

For any AMP Controller, either in a single function device or included in a composite device, the Host shall address HCI control packets to the Interface of the AMP Controller. HCI command packets shall be sent with the following parameters:

Parameter	Value	description
bmRequestType	0x21	Host-to-Interface class request, interface as target
bRequest	0x2B	Arbitrary value chosen to identify requests targeted to an AMP controller function.
wValue	0x00	
wIndex	IF#	This is the actual Interface number within the composite device.

Figure 2.1: HCI command packet addressing for single-function AMP Controller

2.3 BULK ENDPOINTS EXPECTATIONS

Data integrity is a critical aspect for ACL data. This, in combination with bandwidth requirements, is the reason for using a bulk endpoint. Multiple 64-byte packets can be shipped per USB Frame (1 millisecond, full speed) or 512-byte packets per USB Microframe (125 microseconds, high-speed), across the bus.

Suggested bulk max packet size is 64 bytes for full-speed, or 512 bytes for high speed.

Bulk has the ability to detect errors and correct them. In order to avoid starvation, a flow control model similar to the shared endpoint model is recommended for the host controller.

2.4 INTERRUPT ENDPOINT EXPECTATIONS

An interrupt endpoint is necessary to ensure that events are delivered in a predictable and timely manner. Event packets can be sent across USB with a guaranteed latency.

The interrupt endpoint should have an interval of 1 ms (full speed). For a controller using USB high-speed the interrupt interval may have an interval of 125 microseconds.

The USB software and firmware requires no intimate knowledge of the events passed to the host controller.

2.5 ISOCHRONOUS ENDPOINTS EXPECTATIONS

These isochronous endpoints transfer synchronous data to and from the host controller of the radio.

Time is the critical aspect for this type of data. The USB firmware should transfer the contents of the data to the host controllers' synchronous FIFOs. If the FIFOs are full, the data should be overwritten with new data.

These endpoints have a one (1) ms interval, as required by Chapter 9 of the USB Specification, Versions 1.0 and 1.1.

The radio is capable of three (3) 64Kb/s voice channels (and can receive the data coded in different ways – 16-bit linear audio coding is the method that requires the most data). A suggested max packet size for this endpoint would be at least 64 bytes. (It is recommended that max packet sizes be on power of 2 boundaries for optimum throughput.) However, if it is not necessary to support three voice channels with 16-bit coding, 32 bytes could also be considered an acceptable max packet size.

3 CLASS CODE

A class code will be used that is specific to all USB Bluetooth devices. This will allow the proper driver stack to load, regardless of which vendor built the device.

3.1 BLUETOOTH CODES

The following values are defined for Bluetooth Devices:

Code	Label	Value	Description
Class	bDeviceClass	0xE0	Wireless Controller
Subclass	bDeviceSubClass	0x01	RF Controller
Protocol	bDeviceProtocol	0x01	Bluetooth BR/EDR controller

Table 3.1: USB Codes for BR/EDR Controllers

Code	Label	Value	Description
Class	bDeviceClass	0xE0	Wireless Controller
Subclass	bDeviceSubClass	0x01	RF Controller
Protocol	bDeviceProtocol	0x04	Bluetooth AMP controller

Table 3.2: USB Codes for AMP Controllers

These values should also be used in the interface descriptors for the interfaces described in Section 2.1 and as described in the following sections.

3.1.1 Single Function BR/EDR Controller

Set the following for the Device Descriptor and for each Interface Descriptor which applies to the BR/EDR Controller as defined in Table 3.1.

3.1.2 Single Function AMP Controller

Set the following for the Device Descriptor and for each Interface Descriptor which applies to the AMP Controller as defined in Table 3.2.

3.1.3 Composite Bluetooth BR/EDR and AMP Controller

Set the following for the Device Descriptor as defined in the USB Interface Association Descriptor (IAD) ECN.

Set the following for each Interface Descriptor which applies to the BR/EDR Controller as defined in Table 3.1.

Code	Label	Value	Description
Class	bDeviceClass	0xEF	Miscellaneous
Subclass	bDeviceSubClass	0x02	Common Class
Protocol	bDeviceProtocol	0x01	Interface Association Descriptor

Table 3.3: USB Codes for composite devices using IAD

Set the following for the each Interface Descriptor which applies to the AMP Controller as defined in Table 3.2.

3.1.4 Composite Device Including Bluetooth BR/EDR and AMP Controller

Set the following for the Device Descriptor to as defined in Table 3.3.

Set the following for each Interface Descriptor which applies to the BR/EDR Controller as defined in Table 3.1.

Set the following for the each Interface Descriptor which applies to the AMP Controller as defined in Table 3.2.

It also allows HCI commands to be differentiated from USB commands across the control endpoint.

4 DEVICE FIRMWARE UPGRADE

Firmware upgrade capability is not a required feature. But if implemented, the firmware upgrade shall be compliant with the “Universal Serial Bus Device Class Specification for Device Firmware Upgrade” (version 1.0 dated May 13, 1999) available on the USB Forum web site at http://www.usb.org.

5 LIMITATIONS

5.1 POWER SPECIFIC LIMITATIONS

Some USB host controllers in portable devices will not receive power while the system is in a sleep mode. For example, many PCs do not supply power to the USB port in system power states S3 or S4, as defined in ACPI. Hence, USB wake-up can only occur when the system is in S1 or S2. Furthermore, all connections and state information of the USB Bluetooth controller will be lost in the system sleep state if power is lost necessitating re-initialization when the device returns to the active state.

Some USB host controllers further continually snoop memory when a device is attached to see if there is any work that needs to be done. The snoop is typically performed every 1ms for USB full-speed devices. This prevents the processor from dropping into a low power state known as C3. Because the processor is not able to enter the C3 state, significant power consumption may occur. This is a major concern for battery-powered hosts such notebook computers. Some host controllers are capable of scheduling polling of USB devices at short intervals while snooping the host's memory much less frequently. Systems with such host controllers may be able to greatly increase the percentage of time spent in the C3 state even if Bluetooth connections are maintained.

5.2 OTHER LIMITATIONS

Data corruption may occur across isochronous endpoints. Endpoints one and two may suffer from data corruption.

USB provides 16-CRC on all data transfers. The USB has a bit error rate of 10^{-13}.

Note that when a dongle is removed from the system, the radio will lose power (assuming this is a bus-powered device). This means that devices will lose connection.

6 BLUETOOTH COMPOSITE DEVICE IMPLEMENTATION

A USB Composite contains multiple independent functions. This section describes how to implement Bluetooth functions within a USB Composite device. This may require the use of Interface Association Descriptors (IAD) to aggregate multiple Interfaces. This also requires the host to address USB requests to the specific Interface (see [1]).

6.1 CONFIGURATIONS

There are several ways that Bluetooth Controller functions may be included in a USB composite device:

- BR/EDR Controller and AMP Controller (see Section 6.3)
- BR/EDR Controller in a multi-radio device
- BR/EDR Controller in a device also containing non-radio functions (e.g. memory)
- AMP Controller in a multi-radio device

6.2 USING USB INTERFACE ASSOCIATION DESCRIPTORS FOR A BR/EDR CONTROLLER FUNCTION

A BR/EDR Controller (ref) shall contain at least two interfaces:

- HCI Events and ACL data (3 endpoints)
- HCI SCO data (2 endpoints, multiple alternate settings)

A BR/EDR Controller may also contain

- Device Firmware Upgrade (see [2])

When used in a USB Composite device, a BR/EDR Controller function shall use an IAD descriptor to associate the provided interfaces. The following is an example IAD for a BR/EDR function without Device Firmware Upgrade:

- It would be contained within a Configuration Descriptor set.
- It would be followed by two Interface Descriptors and associated Endpoint Descriptors.

Offset	Field	Size	Value	Description
0	bLength	1	0x08	Size of this descriptor in octets
1	bDescriptorType	1	0x0B	INTERFACE ASSOCIATION DESCRIPTOR

Table 6.1: Example Interface Association Descriptor used for a BR/EDR Controller function

Offset	Field	Size	Value	Description
2	bFirstInterface	1	number	Interface number of the first interface associated with this device
3	bInterfaceCount	1	0x02	Number of contiguous interfaces associated with the function
4	bFunctionClass	1	0xE0	Wireless Controller
5	bFunctionSubClass	1	0x01	RF Controller
6	bFunctionProtocol	1	0x01	Bluetooth BR/EDR Controller
7	iFunction	1	Index	Pointer to a name string for this function, if any is provide

Table 6.1: Example Interface Association Descriptor used for a BR/EDR Controller function

6.3 COMBINED BR/EDR CONTROLLER FUNCTION AND SINGLE AMP CONTROLLER FUNCTION

An AMP Controller (see Volume 5) shall contain at least one interface:

- HCI Events and ACL Data (3 endpoints)

An AMP Controller may also contain

- Device Firmware Upgrade (see [2])

When used in a USB Composite device, an AMP Controller does not need IAD. If the device contains the Device Firmware Upgrade option as a separate Device function, an IAD is not needed. If the Device Firmware Upgrade option is bundled with the AMP Controller function, then an IAD is needed to bind the two interfaces.

A USB Composite device containing only a BR/EDR Controller and an AMP Controller may include a Configuration Descriptor set with the following structure:

Offset	Field	Size	Value	Description
				Configuration Descriptor
0	bLength	1	0x09	Configuration Descriptor size
1	bDescriptorType	1	0x02	CONFIGURATION DESCRIPTOR
2	wTotalLength	2		Size of the entire bundle

Table 6.2: Example Configuration Descriptor used for a composite BR/EDR and AMP device

Offset	Field	Size	Value	Description
4	bNumInterfaces	1	0x03	Three Interfaces: IF#1 BR/EDR events & ACL IF#2 BR/EDR SCO or eSCO IF#3 AMP events & ACL
5	bConfigurationValue	1	0x01	
6	iConfiguration	1	Index	Reference to a string describing this.
7	bmAttributes	1		Attributes bitmap
8	MaxPower	1	0xFA	Max power used/2ma, e.g. 500ma
				Interface Association Descriptor
0	bLength	1	0x08	Interface Association Descriptor size
1	bDescriptorType	1	0x0B	INTERFACE ASSOCIATION DESCRIPTOR
2	bFirstInterface	1	IF#1	Interface number of the first interface associated with this device
3	bInterfaceCount	1	0x03	Number of contiguous interfaces associated with the function.
4	bFunctionClass	1	0xE0	Wireless Controller
5	bFunctionSubClass	1	0x01	RF Controller
6	bFunctionProtocol	1	0x01	Bluetooth BR/EDR Controller
7	iFunction	1	Index	Pointer to a name string for this function, if any is provided.
				BR/EDR Events & ACL Interface
0	bLength	1	0x09	
1	bDescriptorType	1	0x04	INTERFACE DESCRIPTOR
2	bInterfaceNumber	1	IF#1	This is the first interface in the device.
3	bAlternateSetting	1	0x00	This is the first setting for this interface.
4	bNumEndpoints	1	0x03	INT, Bulk OUT (ACL), Bulk IN (ACL)
5	bFunctionClass	1	0xE0	Wireless Controller
6	bFunctionSubClass	1	0x01	RF Controller

Table 6.2: Example Configuration Descriptor used for a composite BR/EDR and AMP device

Offset	Field	Size	Value	Description
7	bFunctionProtocol	1	0x01	Bluetooth BR/EDR Controller
8	iInterface	1	Index	Pointer to a name string for this interface, if any is provided.
	Omitted			INT ENDPOINT DESCRIPTOR
	Omitted			BULK OUT ENPOINT DESCIP-TOR
	Omitted			BULK IN ENPOINT DESCIP-TOR
				BR/EDR SCO Interface
0	bLength	1	0x09	
1	bDescriptorType	1	0x04	INTERFACE DESCRIPTOR
2	bInterfaceNumber	1	IF#2	This is the second interface in the device.
3	bAlternateSetting	1	0x00	This is the first setting for this interface
4	bNumEndpoints	1	0x02	Isoch OUT (SCO), Isoch IN (SCO)
5	bFunctionClass	1	0xE0	Wireless Controller
6	bFunctionSubClass	1	0x01	RF Controller
7	bFunctionProtocol	1	0x01	Bluetooth BR/EDR Controller
8	iInterface	1	Index	Pointer to a name string for this interface, if any is provided.
	Omitted			ISOCH OUT ENDPOINT DESCRIPTOR
	Omitted			ISOCH IN ENPOINT DESCRIP-TOR
				AMP Controller: Events & ACL Interface
0	bLength	1	0x09	
1	bDescriptorType	1	0x04	INTERFACE DESCRIPTOR
2	bInterfaceNumber	1	IF#3	This is the third interface in the device.
3	bAlternateSetting	1	0x00	This is the first setting for this interface.
4	bNumEndpoints	1	0x03	INT, Bulk OUT (ACL), Bulk IN (ACL)
5	bFunctionClass	1	0xE0	Wireless Controller

Table 6.2: Example Configuration Descriptor used for a composite BR/EDR and AMP device

Offset	Field	Size	Value	Description
6	bFunctionSubClass	1	0x01	RF Controller
7	bFunctionProtocol	1	0x04	Bluetooth AMP Controller
8	iInterface	1	Index	Pointer to a name string for this interface, if any is provided.
	Omitted			INT ENDPOINT DESCRIPTOR
	Omitted			BULK OUT ENPOINT DESCIP-TOR
	Omitted			BULK IN ENPOINT DESCIP-TOR

Table 6.2: Example Configuration Descriptor used for a composite BR/EDR and AMP device

7 REFERENCES

[1] USB 2.0, http://www.usb.org/developers/docs/docs, including:
1. Interface Association Descriptors ECN
2. Inter-Chip USB Supplement 1.0
3. High Speed Inter-Chip USB Supplement 1.0
4. Link Power Management 1.0

[2] USB Device Firmware Upgrade 1.1

SECURE DIGITAL (SD) TRANSPORT LAYER

This document describes the SD transport layer (between the Host and Controller). HCI command, event and data packets flow through this layer, but the layer does not decode them. The Bluetooth SD Transport layer is defined in a document owned and maintained by the Secure Digital Association. Information regarding that document is described herein.

CONTENTS

1 Introduction 48

2 Goals 49

2.1 Hardware Goals 49

2.2 Software Goals 49

2.3 Configuration Goals 50

2.4 Configuration for Multiple Controllers 50

3 Physical Interface Documents 51

4 Communication 52

4.1 Overview 52

5 Appendix A - Acronyms and Abbreviations 53

6 Appendix B - Related Documents 54

7 Appendix C - Tests 55

7.1 Test Suite Structure 55

1 INTRODUCTION

This document discusses the requirements of the Secure Digital (SD) interface for Bluetooth hardware. Readers should be familiar with SD, SD design issues, and the overall Bluetooth architecture. The reader should also be familiar with the Bluetooth Host Controller Interface.

The SD Bluetooth Protocol is documented in the SDIO Card Type-A Specification for Bluetooth, which is owned and maintained by the Secure Digital Association (SDA). The full specification is available to members of the SDA that have signed all appropriate SD NDA and license requirements. The SDA also makes a Non-NDA version available, the Simplified Version of: SDIO Card Type-A Specification for Bluetooth. There are no changes to the SDA document to comply with the requirements of the Bluetooth SIG.

2 GOALS

2.1 HARDWARE GOALS

The Bluetooth SD transport interface specification is designed to take advantage of both the SD Physical Transport bus and the packet orientation of the Bluetooth HCI protocol. Thus, all data is transferred in blocks as packets. Since the block size used on the SD bus may be smaller than the HCI packet, a segmentation and recombination protocol is defined.

SDIO [2] provides different data rate options, including different bit path widths and clock rates. Systems using SDIO should choose options that provide sufficient bandwidth to support the needs of the Controller, both for device control (HCI commands and events) and for data (ACL, SCO).

The specification supports SDIO-connected Controller:

- BR/EDR Controller
- AMP Controller
- Multifunction Controller incorporating some combination of BR/EDR and AMP Controllers.

2.2 SOFTWARE GOALS

The Bluetooth SD transport interface specification is designed for non-embedded solutions. It is assumed that the host software does not necessarily have a priori knowledge of the SD Bluetooth device.

The interface is not designed for embedded applications where much of the information passed via the interface is known in advance.

The SDA also defines a Bluetooth interface for embedded applications where the Controller contains protocol layers above HCI (RFComm, SDP etc.). This specification is called SDIO Card Type-B Specification for Bluetooth. Information about this specification can be obtained from the SDA:

http://www.sdcard.org.

2.3 CONFIGURATION GOALS

The SDIO Card Specification [2] defines SDIO Standard Function Codes in Table 6-4:

0x2 This function supports the SDIO Type-A for Bluetooth standard interface

0x3 This function supports the SDIO Type-B for Bluetooth standard interface

0x9 This function supports the SDIO Type-A for Bluetooth AMP standard interface

The SDIO Card Type-A Specification for Bluetooth [3] specifies how to implement a BR/EDR Controller. Table 2.1 defines Service ID codes to route HCI messages (codes 0x01 - 0x04). An AMP Controller shall conform to [3] except for one Service ID code:

SDIO Type-A service ID	BR/EDR Controller	AMP Controller
0x00	reserved	reserved
0x01	HCI Command Packet	HCI Command Packet
0x02	ACL Data	ACL Data: Best Effort and Guaranteed Logical Links
0x03	SCO Data	reserved
0x04	HCI Event Packet	HCI Event Packet
0x05-0xFF	Reserved as per [3]	Reserved as per [3]

Table 2.1: Bluetooth SDIO Controller Service ID codes

2.4 CONFIGURATION FOR MULTIPLE CONTROLLERS

An SDIO device may contain one or more Controllers as defined in [3]. These Controller functions shall conform to the requirements of [2] section 6.12.

3 PHYSICAL INTERFACE DOCUMENTS

This specification references the SD SDIO Card Type-A Specification for Bluetooth. This SDA document defines the Bluetooth HCI for all SD devices that support an HCI level interface. Any SD Bluetooth device claiming compliance with the SD Bluetooth Transport must support this interface and additionally adhere to its device type specification, which is set by the Secure Digital Association. The SDIO Card Type-A Specification for Bluetooth document is based on the SDIO Card Specification, which in turn is based on the SD Memory Card Specification: Part 1 Physical Layer Specification. All of these documents are copyrighted by the SDA and are available ONLY to SDA member companies that have signed the appropriate NDA documents with the SDA. As an introduction to the SD Bluetooth Type A specification, the SDA has created 'Simplified' versions of each of these documents. The simplified versions do not contain enough information to fully implement a device, however they do contain enough information to convey the structure and intent of the specifications.

Applicable SDA Documents available to members of the SDA:

SD Memory Card Specification: Part 1 Physical Layer Specification

SDIO Card Specification

SDIO Card Type-A Specification for Bluetooth.

Applicable Simplified SDA Documents available to non-members and members of the SDA:

Simplified Version of: SD Memory Card Specification: Part 1 Physical Layer Specification

Simplified Version of: SDIO Card Specification:

Simplified Version of: SDIO Card Type-A Specification for Bluetooth

More information on the Secure Digital Association and the SD specifications can be found at the SDA website at. http://www.sdcard.org.

4 COMMUNICATION

4.1 OVERVIEW

Figure 4.1 below is a diagram of the communication interface between a Bluetooth SD device and the Bluetooth host protocol stack. Modifications to this diagram might be needed for operating systems that do not support a miniport model:

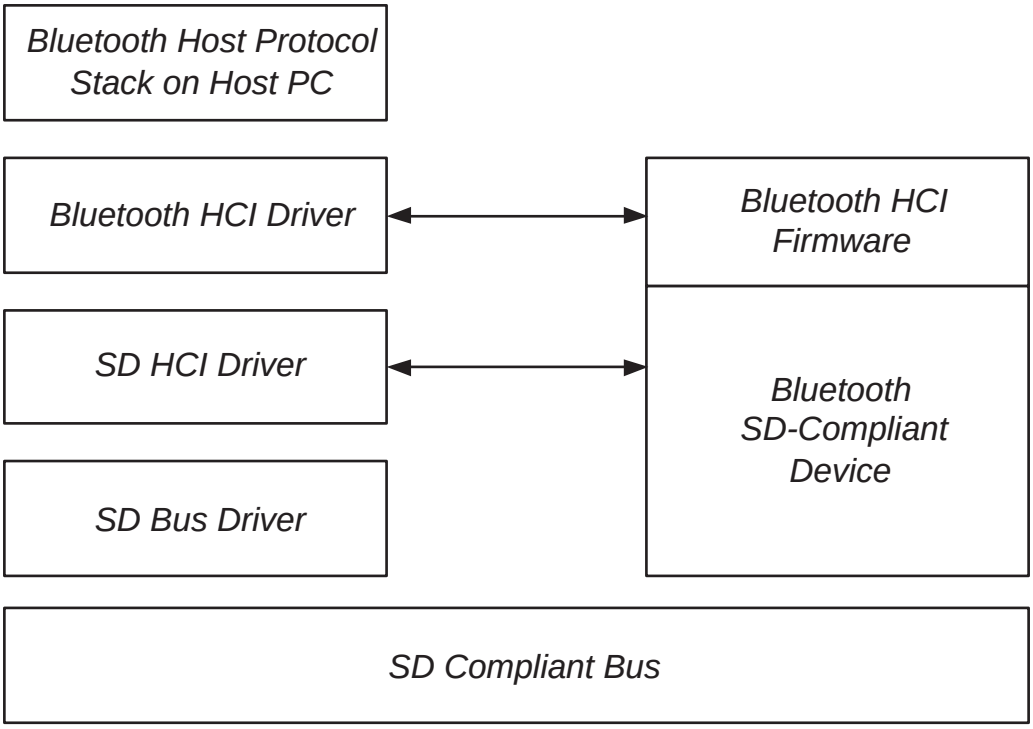

Figure 4.1: SD Communication Diagram

5 APPENDIX A - ACRONYMS AND ABBREVIATIONS

Acronym	Description
HCI	Host Controller Interface
NDA	Non-Disclosure Agreement
OS	Operating System
SD	Secure Digital
SDA	Secure Digital Association
SDIO	Secure Digital Input/Output
SDP	Service Discovery Protocol
SIG	Special Interest Group

Table 5.1: Acronyms and Abbreviations

6 APPENDIX B - RELATED DOCUMENTS

A) Bluetooth Core Specification v1.2 or later.

B) Applicable SDA Documents available to members of the SDA:

[1] B.1) SD Memory Card Specification: Part 1 Physical Layer Specification

[2] B.2) SDIO Card Specification

[3] B.3) SDIO Card Type-A Specification for Bluetooth.

[4] B.4) SDIO Card Type-B Specification for Bluetooth.

[5] B.5) SDIO Card Physical Test Specification

[6] B.5) SDIO Host Physical Test Specification

[7] B.6) SD Bluetooth Type A Test Specification

These documents are available to members of the SDA in the "Members Only" section of the SDA web site (http://www.sdcard.org/access.htm). See http://www.sdcard.org/developers/join.htm for information on joining the SDA.

C) Applicable Simplified SDA Documents available to non-members and members of the SDA:

C.1) Simplified Version of: SD Memory Card Specification: Part 1 Physical Layer Specification
http://www.sdcard.org/developers/tech/sdcard/pls/

C.2) Simplified Version of: SDIO Card Specification http://www.sdcard.org/tech/sdio/sdio_spec

C.3) Simplified Version of: SDIO Card Type-A Specification for Bluetooth - http://www.sdcard.org/developers/tech/sdio/sd_bluetooth_spec/

7 APPENDIX C - TESTS

The SDA has defined formal test procedures for SDIO Type A Bluetooth cards (Controller) and Hosts. It is expected that both Controllers and Hosts will comply with all test requirements set forth by the SDA in accordance with the rules of the SDA. The Bluetooth SIG does not require any formal testing to comply with SIG requirements. The test document names are listed in Appendix B.

7.1 TEST SUITE STRUCTURE

There are two types of tests defined for the HCI SD Transport Layer:

1. Functional Tests
2. Protocol Tests

Tests of both types are defined for both the Host and Controller.

The purpose of the functional tests is to verify that the SD Bluetooth Type A Specification, SDIO Standard and SD Physical Standard have been implemented according to the specifications. These tests and the test environment for these tests are defined in documents provided by the SDA.

The purpose of the protocol tests are to verify that the Bluetooth Controller SD implementation or the Host implementation are according to the SD Bluetooth Type A specification.

The test environment for the protocol tests consists of the tester and the Device Under Test (DUT) as illustrated in Figure 7.1 below.

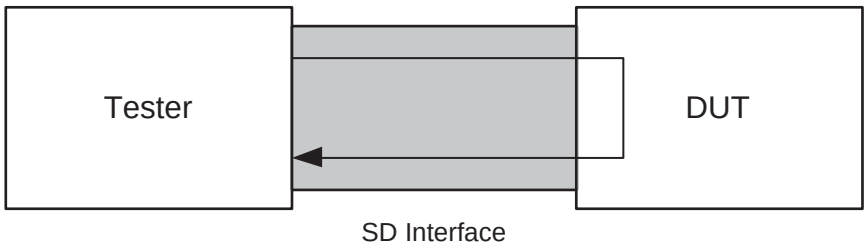

Figure 7.1: Protocol Test Environment

The tester is typically a PC with an SD interface. The DUT is placed into local loopback mode and standard HCI commands are used to drive the tests. The test results are verified in the tester.

THREE-WIRE UART TRANSPORT LAYER

This document describes the Three-Wire UART transport layer (between the Host and Controller). HCI command, event and data packets flow through this layer, but the layer does not decode them.

CONTENTS

1 General 61

2 Overview 62

3 Slip Layer 63

3.1 Encoding a Packet 63

3.2 Decoding a Packet 63

4 Packet Header 65

4.1 Sequence Number 65

4.2 Acknowledge Number 66

4.3 Data Integrity Check Present 66

4.4 Reliable Packet 66

4.5 Packet Type 66

4.6 Payload Length 67

4.7 Packet Header Checksum 67

5 Data Integrity Check 68

5.1 16 Bit CCITT-CRC 68

6 Reliable Packets 69

6.1 Header Checksum Error 69

6.2 Slip Payload Length Error 69

6.3 Data Integrity Check Error 69

6.4 Out Of Sequence Packet Error 69

6.5 Acknowledgement 70

6.6 Resending Packets 70

6.7 Example Reliable Packet Flow 70

7 Unreliable Packets 73

7.1 Unreliable Packet Header 73

7.2 Unreliable Packet Error 73

8 Link Establishment 74

8.1 Uninitialized State 75

8.2 Initialized State 75

8.3 Active State 75

8.4 Sync Message 76

8.5 Sync Response Message 76

8.6 Config Message 76

8.7 Config Response Message 77

8.8 Configuration Field 77

8.8.1 Configuration Messages 78

8.8.2 Sliding Window Size 78

8.8.3 Level of Data Integrity Check 78

8.8.4 Out of Frame Software Flow Control 79
8.8.5 Version Number 79

9 LOW POWER 80
9.1 Wakeup Message 80
9.2 Woken Message 80
9.3 Sleep Message 81

10 Out of Frame Control 82
10.1 Software Flow Control 82

11 Hardware Configuration 83
11.1 Wires 83
11.1.1 Transmit & Receive 83
11.1.2 Ground 83
11.2 Hardware Flow 83
11.2.1 RTS & CTS 83

12 Recommended Parameters 84
12.1 Timing Parameters 84
12.1.1 Acknowledgement of Packets 84
12.1.2 Resending Reliable Packets 84

13 References 85

1 GENERAL

The HCI Three-Wire UART Transport Layer makes it possible to use the Bluetooth HCI over a serial interface between two UARTs. The HCI Three-Wire UART Transport Layer assumes that the UART communication may have bit errors, overrun errors or burst errors. See also “UART Transport Layer” on page 9[vol. 4].

2 OVERVIEW

The HCI Three-Wire UART Transport Layer is a connection based protocol that transports HCI commands, events, ACL and Synchronous packets between the Host and the Controller. Packet construction is in done in two steps. First, it adds a packet header onto the front of every HCI Packet which describes the payload. Second, it frames the packets using a SLIP protocol. Finally, it sends this packet over the UART interface.

The SLIP layer converts an unreliable octet stream into an unreliable packet stream. The SLIP layer places start and end octets around the packet. It then changes all occurrences of the frame start or end octet in the packet to an escaped version.

The packet header describes the contents of the packet, and if this packet needs to be reliably transferred, a way of identifying the packet uniquely, allowing for retransmission of erroneous packets.

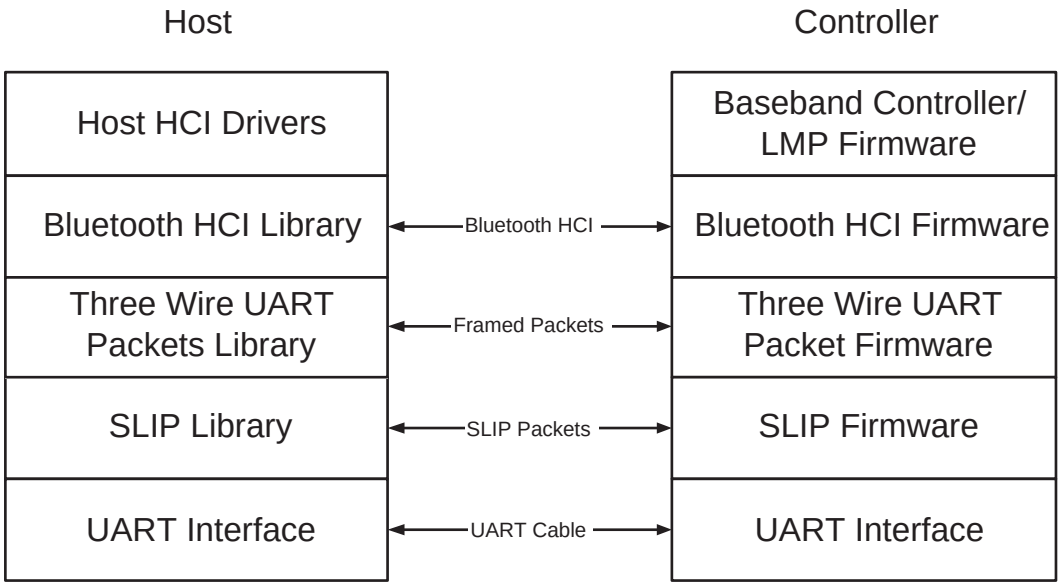

Figure 2.1: The Relationship Between the Host and the Controller

3 SLIP LAYER

The SLIP layer places packet framing octets around each packet being transmitted over the Three-Wire UART Transport Layer. This delimits the packets and allows packet boundaries to be detected if the receiver loses synchronization. The SLIP layer is based upon the RFC 1055 Standard [1].

3.1 ENCODING A PACKET

The SLIP layer performs octet stuffing on the octets entering the layer so that specific octet codes which may occur in the original data do not occur in the resultant stream.

The SLIP layer places octet 0xC0 at the start and end of every packet it transmits. Any occurrence of 0xC0 in the original packet is changed to the sequence 0xDB 0xDC before being transmitted. Any occurrence of 0xDB in the original packet is changed to the sequence 0xDB 0xDD before being transmitted. These sequences, 0xDB 0xDC and 0xDB 0xDD are SLIP escape sequences. All SLIP escape sequences start with 0xDB. All SLIP escape sequences are listed in Table 3.1.

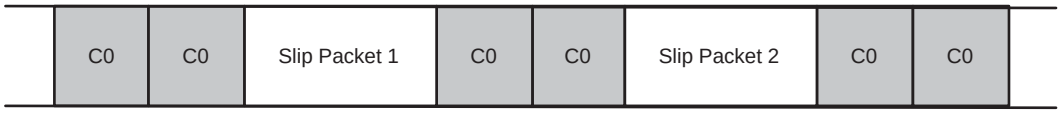

Figure 3.1: SLIP Packets with 0xC0 at the Start and End of Each Packet

3.2 DECODING A PACKET

When decoding a SLIP stream, a device will first be in an unknown state, not knowing if it is at the start of a packet or in the middle of a packet. The device must therefore discard all octets until it finds a 0xC0. If the 0xC0 is followed immediately by a second 0xC0, then the device will discard the first 0xC0 as it was presumably the end of the last packet, and the second 0xC0 was the start of the next packet. The device will then be in the decoding packet state. It can then decode the octets directly changing any SLIP escape sequences back into their unencoded form. When the device decodes the 0xC0 at the end of the packet, it will calculate the length of the SLIP packet, and pass the packet data into the packet decoder. The device will then seek the next packet. If the device does not receive an 0xC0 for the start of the next packet, then all octets up to and including the next 0xC0 will be discarded.

SLIP Escape Sequence	Unencoded form	Notes
0xDB 0xDC	0xC0	
0xDB 0xDD	0xDB	
0xDB 0xDE	0x11	Only valid when OOF Software Flow Control is enabled
0xDB 0xDF	0x13	Only valid when OOF Software Flow Control is enabled

Table 3.1: SLIP Escape Sequences

4 PACKET HEADER

Every packet that is sent over the Three-Wire UART Transport Layer has a packet header. It also has an optional Data Integrity Check at the end of the payload. The Transport Layer does not support packet segmentation and reassembly. Each transport packet will contain at most one higher layer packet.

A packet consists of a Packet Header of 4 octets, a Payload of 0 to 4095 octets, and an optional Data Integrity Check of 2 octets. See Figure 4.1.

The Packet header consists of a Sequence Number of 3 bits, an Acknowledge Number of 3 bits, a Data Integrity Check Present bit, a Reliable Packet bit, a Packet Type of 4 bits, a Payload Length of 12 bits and an 8 bit Header Checksum. See Figure 4.2.

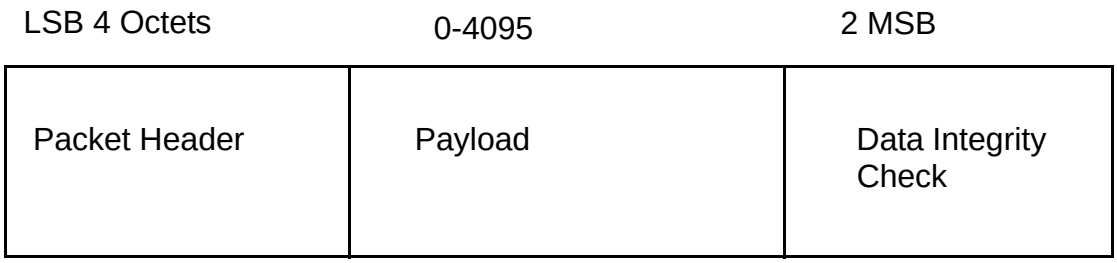

Figure 4.1: Packet Format

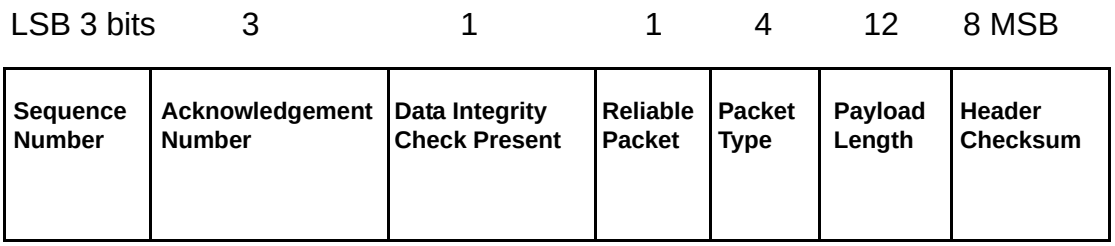

Figure 4.2: Packet Header Format

4.1 SEQUENCE NUMBER

For unreliable packets this field will be set to 0 on transmit and ignored on receive.

Each new reliable packet will be assigned a sequence number which will be equal to the sequence number of the previous reliable packet plus one modulo eight. A packet will use the same sequence number each time it is retransmitted.

4.2 ACKNOWLEDGE NUMBER

The acknowledge number must be set to the sequence number of the next reliable packet this device expects to receive. See Section 6.4 on page 69.

4.3 DATA INTEGRITY CHECK PRESENT

If a 16 bit CCITT-CRC Data Integrity Check is appended to the end of the payload, this bit shall be set to 1.

4.4 RELIABLE PACKET

If this bit it set to 1, then this packet is reliable. This means that the sequence number field is valid, and the receiving end must acknowledge its receipt. If this bit is set to 0, then this packet is unreliable.

4.5 PACKET TYPE

There are four kinds of HCI packets that can be sent via the Three-Wire UART Transport Layer; these are HCI Command Packet, HCI Event Packet, HCI ACL Data Packet and HCI Synchronous Data Packet (see “Host Controller Interface Functional Specification” in the Bluetooth Core Specification v1.2 or later). HCI Command Packets can be sent only to the Controller, HCI Event Packets can be sent only from the Controller, and HCI ACL/ Synchronous Data Packets can be sent both to and from the Controller.

HCI packet coding does not provide the ability to differentiate the four HCI packet types. Therefore, the Packet Type field is used to distinguish the different packets. The acceptable values for this Packet Type field are given in Table 4.1.

HCI Packet Type	Packet Type
Acknowledgement Packets	0
HCI Command Packet	1
HCI ACL Data Packet	2
HCI Synchronous Data Packet	3
HCI Event Packet	4
Reserve	5-13
Vendor Specific	14
Link Control Packet	15

Table 4.1: Three-Wire UART Packet Type

HCI Command Packets, HCI ACL Data Packets and HCI Event Packets are always sent as reliable packets. HCI Synchronous Data Packets are sent as unreliable packets unless HCI Synchronous Flow Control is enabled, in which case they are sent as reliable packets.

In addition to the four HCI packet types, other packet types are defined. One packet type is defined for pure Acknowledgement Packets, and one additional packet type is to support link control. One packet type is made available to vendors for their own use. All other Three-Wire UART Packet Types are reserved for future use.

4.6 PAYLOAD LENGTH

The payload length is the number of octets in the payload data. This does not include the length of the packet header, or the length of the optional data integrity check.

4.7 PACKET HEADER CHECKSUM

The packet header checksum validates the contents of the packet header against corruption. This is calculated by setting the Packet Header Checksum to a value such that the 2’s complement sum modulo 256 of the four octets of the Packet Header including the Packet Header Checksum is 0xFF.

5 DATA INTEGRITY CHECK

The Data Integrity Check field is optional. It can be used to ensure that the packet is valid. The Data Integrity Check field is appended onto the end of the packet. Each octet of the Packet Header and Packet Payload is used to compute the Data Integrity Check.

5.1 16 BIT CCITT-CRC

The CRC is defined using the CRC-CCITT generator polynomial

$g(D) = D^{16} + D^{12} + D^5 + 1$

(see Figure 5.1)

The CRC shift register is filled with 1s before calculating the CRC for each packet. Octets are fed through the CRC generator least significant bit first.

The most significant parity octet is transmitted first (where the CRC shift register is viewed as shifting from the least significant bit towards the most significant bit). Therefore, the transmission order of the parity octets within the CRC shift register is as follows:

x[8] (first), x[9],..., x[15], x[0], x[1],..., x[7] (last)

where x[15] corresponds to the highest power CRC coefficient and x[0] corresponds to the lowest power coefficient.

The switch S shall be set in position 1 while the data is shifted in. After the last bit has entered the LFSR, the switch shall be set in position 2, and the registers contents shall be read out for transmission.

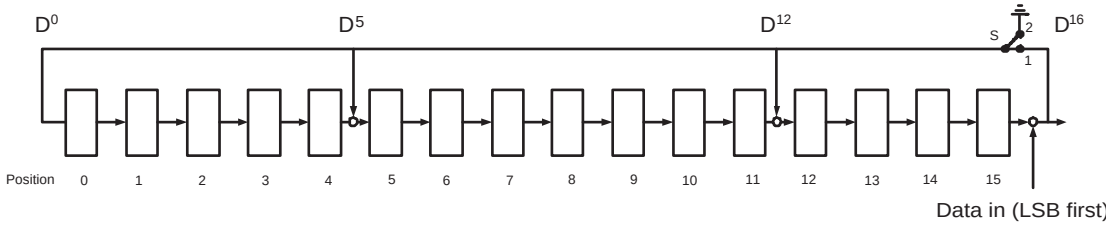

Figure 5.1: The LFSR Circuit Generating the CRC

6 RELIABLE PACKETS

To allow the reliable transmission of packets through the transport, a method needs to be defined to recover from packet errors. The Host or Controller can detect a number of different errors in the packet.

6.1 HEADER CHECKSUM ERROR

The header of the packet is protected by a Packet Header Checksum. If the 2's complement sum modulo 256 of the four octets of the header is not 0xFF, then the packet has an unrecoverable error and all information contained in the packet shall be discarded.

6.2 SLIP PAYLOAD LENGTH ERROR

The length of the SLIP packet shall be checked against the Packet Payload Length. If the Data Integrity Check Present bit is set to 1, then the SLIP packet length should be 6 + Packet Payload Length. If the Data Integrity Check Present bit is set to 0, then the SLIP packet length should be 4 + Packet Payload Length. If this check fails, then all information contained in the packet shall be discarded. The SLIP packet length is the length of the data received from the SLIP layer after the SLIP framing, and SLIP escape codes have been processed.

6.3 DATA INTEGRITY CHECK ERROR

The packet may have a Data Integrity Check at the end of the payload. This is controlled by the Data Integrity Check Present bit in the header. If this is set to 1, then the Data Integrity Check at the end of the payload is checked. If this is different from the value expected, then the packet shall be discarded. If the link is configured to not use data integrity checks, and a packet is received with the Data Integrity Check Present bit set to 1, then the packet shall be discarded.

6.4 OUT OF SEQUENCE PACKET ERROR

Each device keeps track of the sequence number it expects to receive next. This will be one more than the sequence number of the last successfully received reliable packet, modulo eight. If a reliable packet is received which has the expected sequence number, then this packet shall be accepted.

If a reliable packet is received which does not have the expected sequence number, then the packet shall be discarded.

6.5 ACKNOWLEDGEMENT

Whenever a reliable packet is received, an acknowledgement shall be generated.

If a packet is available to be sent, the Acknowledgement Number of that packet shall be updated to the latest expected sequence number.

If a requirement to send an acknowledgement value is pending, but there are no other packets available to be sent, the device can send a pure Acknowledgement Packet. This is an Unreliable Packet, with the Packet Type set to 0, Payload Length set to 0, and the Sequence Number set to 0. The Acknowledge Number must be set correctly.

The maximum number of reliable packets that can be sent without acknowledgement defines the sliding window size of the link. This is configured during link establishment. See Sections 8.6, 8.7 and 8.8.

6.6 RESENDING PACKETS

A Reliable Packet shall be resent until it is acknowledged. Devices should refrain from resending packets too quickly to avoid saturating the link with retransmits. See Section 12.1.2 on page 84.

6.7 EXAMPLE RELIABLE PACKET FLOW

Figure 6.1 shows the transmission of reliable packets between two devices. Device A sends a packet with a Sequence Number of 6, and an Acknowledgement Number of 3. Device B receives this packet correctly, so needs to generate an acknowledgement. Device B then sends a packet with Sequence Number 3 with its Acknowledgement Number set to the next expected packet Sequence Number from Device A of 7.

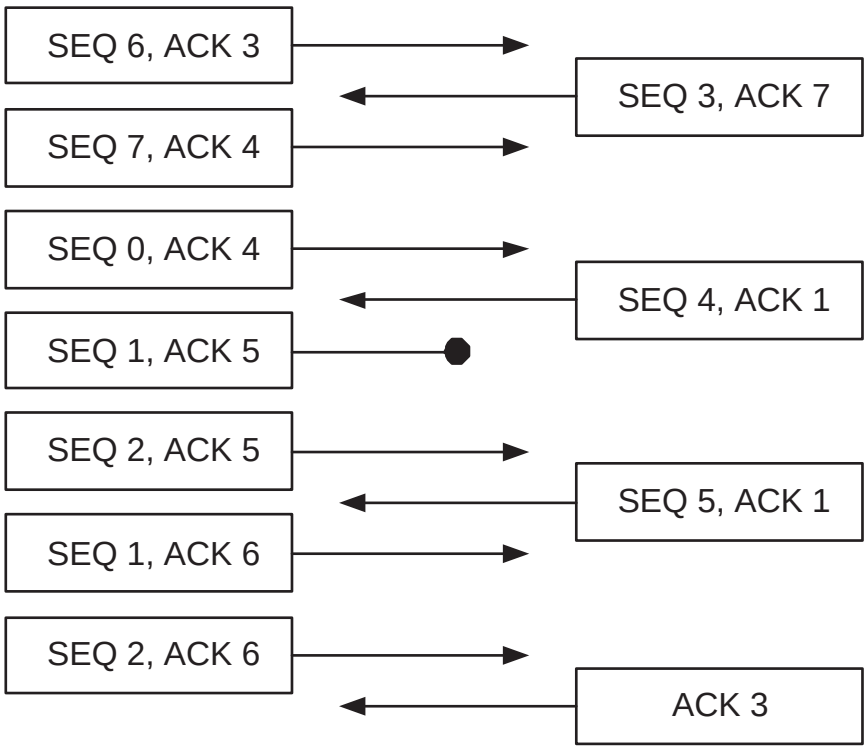

Figure 6.1: Message Diagram Showing Transmission of Reliable Packets

Device A receives a packet with Sequence Number 3 and an Acknowledgement Number of 7. Device A was expecting this sequence number so needs to generate an acknowledgement. The Acknowledgement Number of 7 is one greater than the last Sequence Number that was sent, meaning that this packet was received correctly (see Section 6.6 on page 70).

Device A sends two packets, Sequence Numbers 7 and 0. Both packets have the Acknowledgement Number of 4, the next sequence number it expects from Device B. Device B receives the first correctly, and increments its next expected sequence number to 0. It then receives the second packet correctly, and increments the next expected sequence number to 1.

Device B sends a packet with Sequence Number 4, and the Acknowledgement Number of 1. This will acknowledge both of the previous two packets sent by Device A.

Device A now sends two more packets, Sequence Numbers 1 and 2. Unfortunately, the first packet is corrupted. Device B receives the first packet, and discovers the error, so discards this packet (see Section 6.1 on page 69, Section 6.2 on page 69 or Section 6.3 on page 69). It must generate an acknowledgement of this erroneously received reliable packet. Device B then receives the second packet. This is received out of sequence, as it is currently expecting Sequence Number 1, but has received Sequence Number 2 (see 6.4). Again, it must generate an acknowledgement.

Device B sends another packet with Sequence Number 5. It is still expecting a packet with Sequence Number 1 next, so the Acknowledgement Number is set to 1. Device A receives this, and accepts this packet.

Device A has not had either of its last two packets acknowledged, so it must resend them (see 6.6). It does this, but must update the Acknowledgement Number of the original packets that were sent (see Section 6.5 on page 70). The Sequence Numbers of these packets must stay the same (see Section 4.1 on page 65).

Device B receives these packets correctly, and schedules the sending of an acknowledgement. Because Device B doesn't have any data packets that need to be sent, it sends a pure Acknowledgement Packet (see Section 6.5 on page 70).

7 UNRELIABLE PACKETS

To allow the transmission of unreliable packets through the transport, the following method shall be used.

7.1 UNRELIABLE PACKET HEADER

An unreliable packet header always has the Reliable Packet bit set to 0. The sequence number shall be set to 0. The Data Integrity Check Present, Acknowledgement Number, Packet Type, Payload Length and Packet Header Checksum shall all be set the same as a Reliable Packet.

7.2 UNRELIABLE PACKET ERROR

If a packet that is marked as unreliable and the packet has an error, then the packet shall be discarded.

8 LINK ESTABLISHMENT

Before any packets except Link Control Packets can be sent, the Link Establishment procedure must be performed. This ensures that the sequence numbers are initialized correctly, it also ensures that the two sides are using the same baud rate, allow detection of peer reset, and allows the device to be configured.

Link Establishment is defined by a state machine with three states: Uninitialized, Initialized and Active. When the transport is first started, the link is in the Uninitialized State. There are four messages that are defined: SYNC, SYNC RESPONSE, CONFIG and CONFIG RESPONSE. All four link establishment messages shall be sent with the Data Integrity Present flag set to 0.

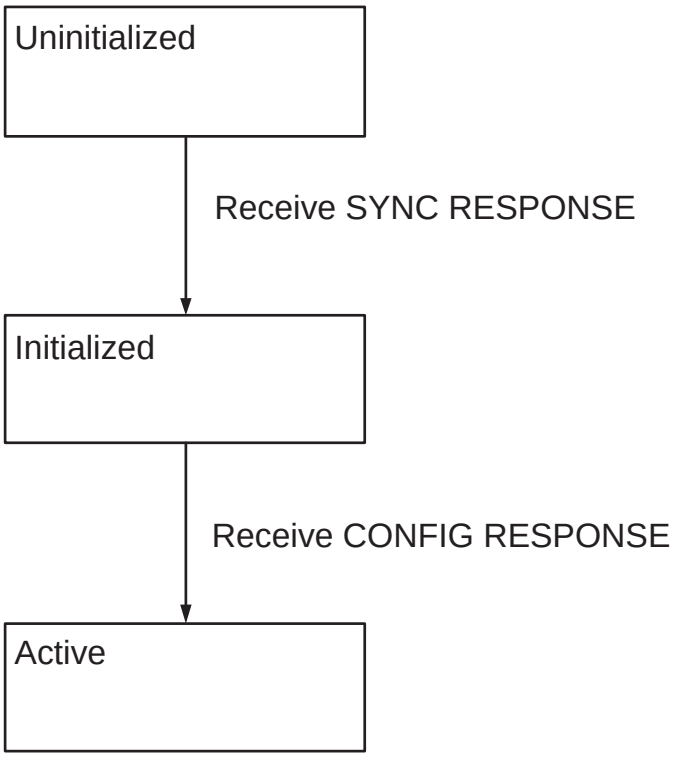

Figure 8.1: Link Establishment State Diagram

8.1 UNINITIALIZED STATE

In the Uninitialized State a device periodically[1] sends SYNC messages. If a SYNC message is received, the device shall respond with a SYNC RESPONSE message. If a SYNC RESPONSE message is received, the device shall move to the Initialized State. In the Initialized State only SYNC and SYNC RESPONSE messages are valid, all other messages that are received must be discarded. If an invalid packet is received, the device shall respond with a SYNC message. The device shall not send any acknowledgement packets in the Uninitialized State[2].

In the Uninitialized State the Controller may wait until it receives a SYNC message before sending its first SYNC message. This allows the Host to control when the Controller starts to send data.

The SYNC message can be used for automatic baud rate detection. It is assumed that the Controller shall stay on a single baud rate, while the Host could hunt for the baud rate. Upon receipt of a SYNC RESPONSE message, the Host can assume that the correct baud rate has been detected.

8.2 INITIALIZED STATE

In the Initialized State a device periodically sends CONFIG messages. If a SYNC message is received, the device shall respond with a SYNC RESPONSE message. If a CONFIG message is received, the device shall respond with a CONFIG RESPONSE message. If a CONFIG RESPONSE message is received, the device will move to the Active State. All other messages that are received must be ignored.

8.3 ACTIVE STATE

In the Active State, a device can transfer higher layer packets through the transport. If a CONFIG message is received, the device shall respond with a CONFIG RESPONSE message. If a CONFIG RESONSE message is received, the device shall discard this message.

If a SYNC message is received while in the Active State, it is assumed that the peer device has reset. The local device should therefore perform a full reset of the upper stack, and start Link Establishment again at the Uninitialized State.

Upon entering the Active State, the first packet sent shall have its SEQ and ACK numbers set to zero.

1. During link establishment, various messages are sent periodically. It is suggested to send 4 messages per second.
2. Any packet that was erroneous would normally be acknowledged, as the recipient does not know if the packet was a reliable packet or not. The recipient cannot do this in the Uninitialized State, as it is possible to receive corrupt data while the Uninitialized state.

8.4 SYNC MESSAGE

The SYNC message is an unreliable message sent with the Packet Type of 15 and a Payload Length of 2.

The payload is composed of the octet pattern 0x01 0x7E[1].

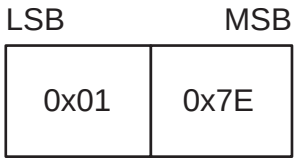

Figure 8.2: Sync Message Format

8.5 SYNC RESPONSE MESSAGE

The SYNC RESPONSE message is an unreliable message sent with the Packet Type of 15 and a Payload Length of 2. The payload is composed of the octet pattern 0x02 0x7D.

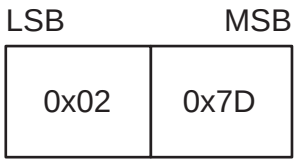

Figure 8.3: Sync Response Message Format

8.6 CONFIG MESSAGE

The CONFIG message is an unreliable message sent with the Packet Type of 15 and a Payload Length of 2 plus the size of the Configuration Field. The payload is composed of the octet pattern 0x03 0xFC and the Configuration Field.

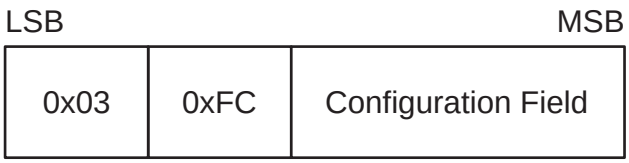

Figure 8.4: Configuration Message Format

1. The second octet for all Link Control Packets equals the least significant 7 bits of the first octet, inverted, with the most significant bit set to ensure even parity.

8.7 CONFIG RESPONSE MESSAGE

The CONFIG RESPONSE message is an unreliable message sent with the Packet Type of 15 and a Payload Length of 2 plus the size of the Configuration Field. The payload is composed of the octet pattern 0x04 0x7B and the Configuration Field.

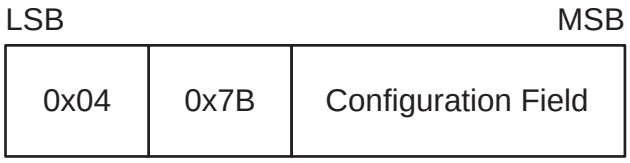

Figure 8.5: Configuration Response Message Format

8.8 CONFIGURATION FIELD

The Configuration Field contains the Version Number, Sliding Window Size, the Data Integrity Check Type, and if Out Of Frame (OOF) Software Flow Control is allowed.

The Configuration Field in a CONFIG message sent by the Host determines what the Host can transmit and accept. The Configuration Field in a CONFIG RESPONSE message sent by the Controller determines what the Host and Controller shall transmit and can expect to receive.

The Controller sends CONFIG messages without a Configuration Field. The Host sends CONFIG RESPONSE messages without a Configuration Field.

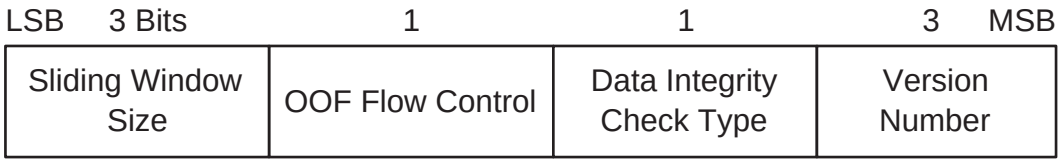

Figure 8.6: Configuration Field Detail

To allow for future extension of the Configuration Field, the size of the message determines the number of significant Configuration Octets in the payload. Future versions of this specification may use extra octets. Any bits that are not included in the message shall be set to 0. Any bits that are not defined are reserved and shall be set to 0.

A device shall not change the values if sends in the Configuration Field during Link Establishment.

8.8.1 Configuration Messages

The CONFIG – CONFIG RESPONSE message sequence configures the link in both directions. Until a CONFIG RESPONSE message is received only unreliable Link Establishment messages may be sent. Once CONFIG RESPONSE message has been received all other packet types may be sent, and received messages passed up to the Host.

The CONFIG and CONFIG RESPONSE messages contain a set of options for both devices on the link. The Host sends a CONFIG message with the set of options that the Host would like to use. The Controller

responds with a CONFIG RESPONSE message with the set of options that the Host and the Controller will use. This means that the Controller is in full control of the set of options that will be used for all messages sent by both the Host and Controller.

8.8.2 Sliding Window Size

This is the maximum number of reliable packets a sender of the CONFIG message can send without requiring an acknowledgement. The value of this field shall be in the range one to seven. The value in the CONFIG RESPONSE message shall be less than or equal to the value in the CONFIG message. For example, the Host may suggest a window size of five in its CONFIG message and the Controller may respond with a value of three in its CONFIG RESPONSE message, but not six or seven. Both devices will then use a maximum sliding window size of three.

8.8.3 Level of Data Integrity Check

The CONFIG message contains a bit field describing the types of Data Integrity Checks the sender is prepared to transmit. The peer will select the one it is prepared to use and send its choice in the CONFIG RESPONSE message.

If data integrity checks are not required, then the Data Integrity Check Present bit shall be set to 0 by the Host and Controller.

Level of Data Integrity	Parameter Description for CONFIG Message
0	No Data Integrity Check is supported.
1	16 bit CCITT-CRC may be used.

Figure 8.7: Data Integrity Check Type in the CONFIG Message

Level of Data Integrity	Parameter Description for CONFIG RESPONSE Message
0	No Data Integrity Check must be used.
1	16 bit CCITT-CRC may be used.

Figure 8.8: Data Integrity Check Type in the CONFIG RESPONSE Message

8.8.4 Out of Frame Software Flow Control

By default, the transport uses no flow control except that mandated by the HCI Functional Specification and the flow control achieved by not acknowledging reliable Host messages. If Software Flow Control is to be used, this needs to be negotiated.

The CONFIG message specifies whether the sender of the CONFIG message is prepared to receive Out of Frame Software Flow Control messages. The CONFIG RESPONSE message specifies whether the peer can send Out of Frame Software Flow Control messages. The CONFIG RESPONSE message may have the field set to 1 only if the CONFIG message had it set to 1. (See Section 10.1 on page 82)

8.8.5 Version Number

The Version Number of this protocol shall determine which facilities are available to be used.

The CONFIG message specifies the Version Number supported by the Host. The CONFIG RESPONSE message specifies the Version Number that shall be used by the Host and Controller when sent by the Controller. The value in the CONFIG RESPONSE message shall be less than or equal to the value in the CONFIG message. The Version Numbers are enumerated in Figure 8.9. This specification is version 1.0 (Version Number = 0).

Version Number	Parameter Description for CONFIG and CONFIG RESPONSE Message
0	Version 1.0 of this Protocol
1-7	Reserved for future use

Figure 8.9: Version Number in the CONFIG and CONFIG RESPONSE message

9 LOW POWER

After a device is in the Active State, either side of the transport link may wish to enter a low power state. Because recovery from a loss of synchronization is possible, it is allowable to stop listening for incoming packets at any time.

To make the system more responsive after a device has entered a low power state, a system of messages is employed to allow either side to notify the other that they are entering a low power state and to wake a device from that state. These messages are sent as Link Control Packets. It is optional for a device to support the Sleep message. The Wakeup and Woken messages are mandatory.

9.1 WAKEUP MESSAGE

The Wakeup message shall be the first message sent whenever the device believes that the other side is asleep. The device shall then repeatedly send the Wakeup message until the Woken message is received. There must be at least a one character gap between the sending of each Wakeup message to allow the UART to resynchronize. The Wakeup message is an unreliable message sent with a Packet Type of 15, and a Payload Length of 2. The payload is composed of the octet pattern 0x05 0xFA. The Wakeup message shall be used after a device has sent a Sleep message. It is mandatory to respond to the Wakeup message.

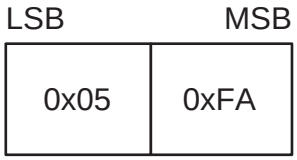

Figure 9.1: Wakeup Message Payload Format

9.2 WOKEN MESSAGE

The Woken message shall be sent whenever a Wakeup message is received even if the receiver is currently not asleep. Upon receiving a Woken message, a device can determine that the other device is not in a low power state and can send and receive data. The Woken message is an unreliable message sent with a Packet Type of 15, and a Payload Length of 2. The payload is composed of the octet pattern 0x06 0xF9.

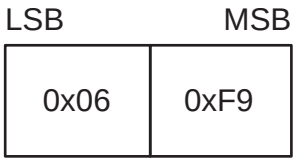

Figure 9.2: Woken Message Payload Format

9.3 SLEEP MESSAGE

A Sleep message can be sent at any time after Link Establishment has finished. It notifies the other side that this device is going into a low power state, and that it may also go to sleep. If a device sends a Sleep message it shall use the Wakeup / Woken message sequence before sending any data. If a device receives a Sleep message, then it should use the Wakeup / Woken message sequence before sending any data. The Sleep message is an unreliable message sent with a Packet Type of 15, and a Payload Length of 2. The payload is composed of the octet pattern 0x07 0x78.

The sending of this message is optional. The receiver of this message need not go to sleep, but cooperating devices may be able to schedule sleeping more effectively with this message.

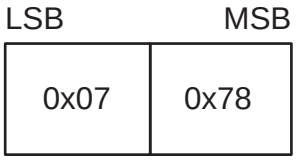

Figure 9.3: Sleep Message Payload Format

10 OUT OF FRAME CONTROL

It is possible to embed information in the SLIP data stream after a SLIP ESCAPE character that can allow for Software Flow Control. This feature is optional and must be negotiated in the Link Establishment configuration messages.

10.1 SOFTWARE FLOW CONTROL

If Software Flow Control is enabled, then the standard XON / XOFF (0x11 and 0x13) characters will control the flow of data over the transport. To allow the XON / XOFF characters to be sent in the payload, they shall be escaped as follows: 0x11 shall be changed to 0xDB 0xDE, 0x13 shall be changed to 0xDB DF. This means that the XON / XOFF characters in the data stream are used only by software flow control.

If Software Flow Control is disabled, then the SLIP escape sequences 0xDB 0xDE and 0xDB 0xDF are undefined. In this case, the original octets of 0x11 and 0x13 shall not be changed. Flow control should always be provided by the tunneled protocols, e.g. HCI Flow Control. Flow control is still available using the standard Sequence Number / Acknowledge Number. This can be done by not acknowledging packets until traffic can resume.

11 HARDWARE CONFIGURATION

The HCI Three-Wire UART Transport uses the following configurations.

11.1 WIRES

There are three wires used by the HCI Three-Wire UART Transport. These are Transmit, Receive, and Ground.

11.1.1 Transmit & Receive

The transmit line from one device shall be connected to the receive line of the other device.

11.1.2 Ground

A common ground reference shall be used.

11.2 HARDWARE FLOW

Hardware flow control may be used. The signaling shall be the same as a standard RS232 flow control lines. If used, the signals shall be connected in a null-modem fashion; for example, the local RTS shall be connected to the remote CTS and vice versa.

11.2.1 RTS & CTS

Request to Send indicates to the remote side that the local device is able to accept more data.

Clear to Send indicates if the remote side is able to receive data.

(See ITU.T recommendations V.24 [2] and V.28 [3])

12 RECOMMENDED PARAMETERS

12.1 TIMING PARAMETERS

Because this transport protocol can be used with a wide variety of baud rates, it is not possible to specify a single timing value. However, it is possible to specify the time based on the baud rate in use. If T_{max} is defined as the maximum time in seconds it will take to transmit the largest packet over this transport, T_{max} can be expressed as:

T_{max} = maximum size of a packet in bits / baud rate

The maximum size of a packet in bits is either the number of bits in a 4095 octet packet (32,760) or less if required in an embedded system or as determined by the Host or Controller[1]. Thus, at a baud rate of 921,600 and the maximum packet size of 4095 octets, T_{max} is: (4095*10) / 921,600 = 44.434ms.

12.1.1 Acknowledgement of Packets

It is not necessary to acknowledge every packet with a pure acknowledgement packet if there is a data packet that will be sent soon. The recommended maximum time before starting to send an acknowledgement is 2 * T_{max}.

12.1.2 Resending Reliable Packets

A reliable packet must be resent until it is acknowledged. The recommended time between starting to send the same packet is 3 * T_{max}.

1. This can be determined using the HCI_Read_Buffer_Size command.

13 REFERENCES

[1] [IETF RFC 1055: Nonstandard for transmission of IP datagrams over serial lines: SLIP – http://www.ietf.org/rfc/rfc1055.txt

[2] ITU Recommendation V.24: List of definitions for interchange circuits between data terminal equipment (DTE) and data circuit-terminating equipment (DCE) – http://www.itu.int/rec/recommendation.asp

[3] ITU Recommendation V.28: Electrical characteristics for unbalanced double-current interchange circuits – http://www.itu.int/rec/recommendation.asp

Specification Volume 5

SPECIFICATION OF THE *BLUETOOTH* SYSTEM

Wireless Connections Made Easy

Core System Package

[AMP Controller Volume]

Covered Core Package version:
3.0 + HS

Bluetooth®

Revision History

The Revision History is shown in the “Appendix” on page 43[vol. 0].

Contributors

The persons who contributed to this specification are listed in the Appendix.

Web Site

This specification can also be found on the official Bluetooth web site:
http://www.bluetooth.com

Disclaimer and Copyright Notice

The copyright in these specifications is owned by the Promoter Members of Bluetooth SIG, Inc. (“Bluetooth SIG”). Use of these specifications and any related intellectual property (collectively, the “Specification”), is governed by the Promoters Membership Agreement among the Promoter Members and Bluetooth SIG (the “Promoters Agreement”), certain membership agreements between Bluetooth SIG and its Adopter and Associate Members (the “Membership Agreements”) and the Bluetooth Specification Early Adopters Agreements (“1.2 Early Adopters Agreements”) among Early Adopter members of the unincorporated Bluetooth special interest group and the Promoter Members (the “Early Adopters Agreement”). Certain rights and obligations of the Promoter Members under the Early Adopters Agreements have been assigned to Bluetooth SIG by the Promoter Members.

Use of the Specification by anyone who is not a member of Bluetooth SIG or a party to an Early Adopters Agreement (each such person or party, a “Member”), is prohibited. The legal rights and obligations of each Member are governed by their applicable Membership Agreement, Early Adopters Agreement or Promoters Agreement. No license, express or implied, by estoppel or otherwise, to any intellectual property rights are granted herein.

Any use of the Specification not in compliance with the terms of the applicable Membership Agreement, Early Adopters Agreement or Promoters Agreement is prohibited and any such prohibited use may result in termination of the applicable Membership Agreement or Early Adopters Agreement and other liability permitted by the applicable agreement or by applicable law to Bluetooth SIG or any of its members for patent, copyright and/or trademark infringement.

THE SPECIFICATION IS PROVIDED “AS IS” WITH NO WARRANTIES WHATSOEVER, INCLUDING ANY WARRANTY OF MERCHANTABILITY, NONINFRINGEMENT, FITNESS FOR ANY PARTICULAR PURPOSE, SATISFACTORY QUALITY, OR REASONABLE SKILL OR CARE, OR ANY WARRANTY ARISING OUT OF ANY COURSE OF DEALING, USAGE, TRADE PRACTICE, PROPOSAL, SPECIFICATION OR SAMPLE.

Each Member hereby acknowledges that products equipped with the Bluetooth® technology (“Bluetooth® Products”) may be subject to various regulatory controls under the laws and regulations of various governments worldwide. Such laws and regulatory controls may govern, among other things, the combination, operation, use, implementation and distribution of Bluetooth® Products. Examples of such laws and regulatory controls include, but are not limited to, airline regulatory controls, telecommunications regulations, technology transfer controls and health and safety regulations. Each Member is solely responsible for the compliance by their Bluetooth® Products with any such laws and regulations and for obtaining any and all required authorizations, permits, or licenses for their Bluetooth® Products related to such regulations within the applicable jurisdictions. Each Member acknowledges that nothing in the Specification provides any information or assistance in connection with securing such compliance, authorizations or licenses. NOTHING IN THE SPECIFICATION CREATES ANY WARRANTIES, EITHER EXPRESS OR IMPLIED, REGARDING SUCH LAWS OR REGULATIONS.

ALL LIABILITY, INCLUDING LIABILITY FOR INFRINGEMENT OF ANY INTELLECTUAL PROPERTY RIGHTS OR FOR NONCOMPLIANCE WITH LAWS, RELATING TO USE OF THE SPECIFICATION IS EXPRESSLY DISCLAIMED. BY USE OF THE SPECIFICATION, EACH MEMBER EXPRESSLY WAIVES ANY CLAIM AGAINST BLUETOOTH SIG AND ITS PROMOTER MEMBERS RELATED TO USE OF THE SPECIFICATION.

Bluetooth SIG reserves the right to adopt any changes or alterations to the Specification as it deems necessary or appropriate.

Copyright © 1999–2009

Ericsson AB,
Lenovo,
Intel Corporation,
Microsoft Corporation,
Motorola, Inc.,
Nokia Corporation,
Toshiba Corporation

*Third-party brands and names are the property of their respective owners.

CONTENTS

Contents 11

1 Introduction 14

1.1 Organization of the 802.11 PAL 14

2 AMP Host Controller Interface 16

2.1 Read Local Version Information Command 16
2.2 Read Local Amp Info Command 16
2.3 Reset Command 18
2.4 Read Failed Contact Counter Command 19
2.5 Read Link Quality Command 19
2.6 Read RSSI Command 19
2.7 Short Range Mode Command 19
2.8 Write Best Effort Flush Timeout Command 20
2.9 Read Best Effort Flush Timeout Command 20
2.10 Physical Link Loss Early Warning Event 20
2.11 Physical Link Recovery Event 21
2.12 Channel Selected Event 21
2.13 Short Range Mode Change Completed Event 21
2.14 Data Structures 21
2.14.1 AMP_ASSOC Structure 21
2.14.2 MAC Address 22
2.14.3 802.11 PAL Capabilities 23
2.14.4 Preferred Channel List 24
2.14.5 Connected Channel List 24
2.14.6 802.11 PAL Version 25
2.15 Connection Accept Timeout Configuration Parameter 25

3 Physical Link Manager 26

3.1 Physical Link State Machine 26
3.1.1 General rules 26
3.1.2 State Diagram 26
3.1.3 States 27
3.1.4 Events 28
3.1.5 Conditions 28
3.1.6 Actions 29
3.1.7 DISCONNECTED State 29
3.1.8 STARTING State 31
3.1.9 CONNECTING State 31

3.1.10 AUTHENTICATING State 32
3.1.11 CONNECTED State 33
3.1.12 DISCONNECTING State 33
3.2 Channel Selection 34
3.2.1 Overview 34
3.2.2 Regulatory 35
3.2.3 Specification of Channel Identifiers 35
3.3 802.11 Link Creation 37
3.3.1 Starting the AMP Network 37
3.3.2 Establishing the 802.11 Link 38
3.3.3 Address Fields of Data Frames 39
3.3.4 Admission Control 39
3.4 Physical Link Maintenance 39
3.5 Physical Link Security 40
3.5.1 Obtaining Key Material 40
3.5.2 Creating a PTK 40
3.5.3 Using Encryption 41
3.5.4 Refreshing a PTK 41
3.5.5 Transporting Security Handshake Messages 41
3.6 Physical Link Support for QOS 42
3.6.1 QoS Advertisement 42
3.6.2 Negotiation 42
4 Logical Link Manager 43
4.1 Logical Link Creation 43
4.1.1 Logical Link Handles 43
4.1.2 Null Traffic Logical Links 43
4.1.3 Best Effort Logical Links 44
4.1.4 Guaranteed Logical Links 44
4.2 Logical Link Updates 44
4.3 Logical Link Deletion 45
5 Data Manager 46
5.1 Encapsulation 46
5.2 Coexistence and Local Interference 47
5.2.1 Interference from Collocated Radios 47
5.2.2 Unavailability of Remote Peer 47
5.2.3 Activity Reports 48
5.3 Explicit Flush 50
5.4 Automatic Flush 50
5.5 Quality Of Service Violations 50

6 Constants 51

7 Message Sequence Charts 52

8 Appendix A: Test Support 53

8.1 AMP Test Command 53

8.1.1 Test Scenarios 55

8.1.2 Test Mode Data Frame Format 56

8.2 AMP Start Test Event 56

8.3 AMP Test End Event 57

9 References 58

Figures 59

Tables 60

Core System Package [AMP Controller Volume]
Part A

802.11 PROTOCOL ADAPTATION LAYER FUNCTIONAL SPECIFICATION

This document specifies the Protocol Adaptation Layer for the IEEE 802.11 conformant Alternate MAC/PHY.

CONTENTS

1 Introduction 14
1.1 Organization of the 802.11 PAL 14
2 AMP Host Controller Interface 16
2.1 Read Local Version Information Command 16
2.2 Read Local Amp Info Command 16
2.3 Reset Command 18
2.4 Read Failed Contact Counter Command 19
2.5 Read Link Quality Command 19
2.6 Read RSSI Command 19
2.7 Short Range Mode Command 19
2.8 Write Best Effort Flush Timeout Command 20
2.9 Read Best Effort Flush Timeout Command 20
2.10 Physical Link Loss Early Warning Event 20
2.11 Physical Link Recovery Event 21
2.12 Channel Selected Event 21
2.13 Short Range Mode Change Completed Event 21
2.14 Data Structures 21
2.14.1 AMP_ASSOC Structure 21
2.14.2 MAC Address 22
2.14.3 802.11 PAL Capabilities 23
2.14.4 Preferred Channel List 24
2.14.5 Connected Channel List 24
2.14.6 802.11 PAL Version 25
2.15 Connection Accept Timeout Configuration Parameter 25
3 Physical Link Manager 26
3.1 Physical Link State Machine 26
3.1.1 General rules 26
3.1.2 State Diagram 26
3.1.3 States 27
3.1.4 Events 28
3.1.5 Conditions 28
3.1.6 Actions 29
3.1.7 DISCONNECTED State 29
3.1.8 STARTING State 31
3.1.9 CONNECTING State 31
3.1.10 AUTHENTICATING State 32
3.1.11 CONNECTED State 33

3.1.12 DISCONNECTING State 33
3.2 Channel Selection 34
3.2.1 Overview 34
3.2.2 Regulatory 35
3.2.3 Specification of Channel Identifiers 35
3.3 802.11 Link Creation 37
3.3.1 Starting the AMP Network 37
3.3.2 Establishing the 802.11 Link 38
3.3.3 Address Fields of Data Frames 39
3.3.4 Admission Control 39
3.4 Physical Link Maintenance 39
3.5 Physical Link Security 40
3.5.1 Obtaining Key Material 40
3.5.2 Creating a PTK 40
3.5.3 Using Encryption 41
3.5.4 Refreshing a PTK 41
3.5.5 Transporting Security Handshake Messages 41
3.6 Physical Link Support for QOS 42
3.6.1 QoS Advertisement 42
3.6.2 Negotiation 42
4 Logical Link Manager 43
4.1 Logical Link Creation 43
4.1.1 Logical Link Handles 43
4.1.2 Null Traffic Logical Links 43
4.1.3 Best Effort Logical Links 44
4.1.4 Guaranteed Logical Links 44
4.2 Logical Link Updates 44
4.3 Logical Link Deletion 45
5 Data Manager 46
5.1 Encapsulation 46
5.2 Coexistence and Local Interference 47
5.2.1 Interference from Collocated Radios 47
5.2.2 Unavailability of Remote Peer 47
5.2.3 Activity Reports 48
5.3 Explicit Flush 50
5.4 Automatic Flush 50
5.5 Quality Of Service Violations 50
6 Constants 51
7 Message Sequence Charts 52

8 Appendix A: Test Support 53
8.1 AMP Test Command 53
8.1.1 Test Scenarios 55
8.1.2 Test Mode Data Frame Format 56
8.2 AMP Start Test Event 56
8.3 AMP Test End Event 57
9 References 58
Figures 59
Tables 60

1 INTRODUCTION

This Part of the Bluetooth Core Specification describes the operation of the Protocol Adaptation Layer (PAL) for a controller incorporating an 802.11 device compliant with the 2007 edition of the IEEE 802.11 Standard (see [1]). In this Part, specific references in [1] will be given by clause number.

The 802.11 PAL defines the protocol state machines, data encapsulation methods, event triggers, and data structures in support of the use of an 802.11 AMP.

1.1 ORGANIZATION OF THE 802.11 PAL

To aid understanding of functional descriptions, Figure 1.1 shows the organization of the 802.11 PAL. This structure is informative.

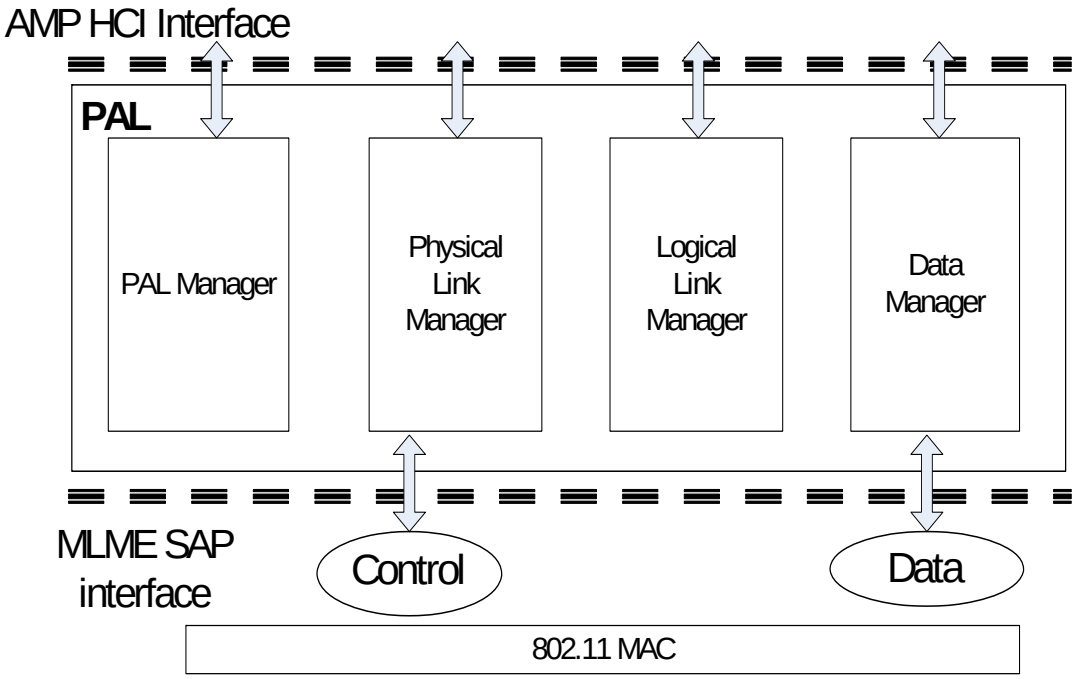

Figure 1.1: Internal structure of the 802.11 PAL

The upper edge of the 802.11 PAL provides a single instance of the logical HCI with AMP functionality. The behavior of the PAL is defined at this interface in terms of logical HCI operations. Implementations may optionally use a physical HCI transport.

For clarity of description, the lower edge of the PAL uses services including those defined in [1] clause 10.3.

The PAL Manager implements operations that are global to the PAL. This includes responding to host requests for AMP info and PAL version as well as performing PAL reset.

The Physical Link Manager implements operations on physical links. Physical link semantics are defined in Section 3. Supported operations include physical link creation and acceptance, and deletion of physical links. Supported operations at the MAC interface include PHY channel selection and security establishment and maintenance.

The Logical Link Manager implements operations on logical links. Logical link semantics are defined in Section 4. Each logical link exists with respect to a single physical link. Supported operations include creation and deletion of logical links and changes to QoS parameters for those logical links. At the MAC interface this includes the mapping of extended flow specifications to user priorities.

The Data Manager performs operations on data packets and is described in Section 5. Each data packet is associated with exactly one extended flow specification and therefore exactly one logical link. Supported operations include transmit, receive and buffer management operations such as flush events. At the MAC interface this includes interactions with the MAC transmit and receive operations and determination of the next packet to send on any particular link.

2 AMP HOST CONTROLLER INTERFACE

A number of elements used in HCI commands and events are defined to be AMP-type specific. This section describes the values to be used for the 802.11 PAL.

Octet ordering conventions for parameters and fields in this section shall be as defined in HCI, [Vol 2] Part E, Section 5.2.

2.1 READ LOCAL VERSION INFORMATION COMMAND

Two return parameter values from this HCI command are defined to be AMP-type specific. For the 802.11 PAL they shall be as follows.

PAL _Version *Size: 1 Octet*

Value	Parameter Description
0xXX	Version of the current PAL in the Controller. See Bluetooth Assigned Numbers.

PAL_Sub-version: *Size: 2 Octets*

Value	Parameter Description
0xXXXX	In an 802.11 PAL this value is vendor specific.

2.2 READ LOCAL AMP INFO COMMAND

See [Vol 2] Part E, Section 7.5.7.

There are six return parameters for the Read Local AMP Info command which are 802.11 AMP specific.

Total_Bandwidth: *Size: 4 Octets*

Value	Parameter Description
0xXXXXXXXX	An upper bound on the total data rate that can be achieved by the AMP for applications. It accounts for the total bandwidth provided by the HCI transport. No sustained combination of transmit and receive operations shall exceed this value. This may be used to help in AMP selection and admission control. Expressed in kbps. For testing purposes, the achievable throughput deliverable to applications by an ERP PHY shall be assumed to be no more than 30000 kbps.

Max_Guaranteed_Bandwidth: *Size: 4 Octets*

Value	Parameter Description
0xXXXXXXXX	An upper bound on the maximum data rate as seen by the application that the AMP can guarantee for a logical channel. Any request made by an application above this level would be rejected. It accounts for any bandwidth limitations of the HCI transport. No sustained combination of transmit and receive operations shall exceed this value. This can be used to help in AMP selection and admission control. Expressed in kbps. The Max_Guaranteed_Bandwidth parameter value returned shall be no greater than the Total_Bandwidth parameter. This value is not a guarantee of bandwidth and should be interpreted as an upper bound on the sum of the bandwidths of all active flow specs.

Min_Latency: *Size: 4 Octets*

Value	Parameter Description
	The Min_Latency parameter value is the practical lower bound on the service latency that can be provided by the 802.11 AMP. The lower bound of the service latency is the time from when a frame is issued to the AMP HCI until the MAC starts transmitting the frame with no contention window back off. This shall be equal to the AMP HCI minimum latency + DIFS + CWmin where the DIFS and CWmin are as given in [1] clause 9.2.10.

Max_PDU_Size: *Size: 4 Octets*

Value	Parameter Description
	An upper bound on the size of L2CAP PDU which may be provided for transmission or reception on this AMP. The Host shall not require the AMP to transport L2CAP PDUs larger than this value. Expressed in octets. The Maximum PDU Size parameter described in [[Vol 3] Part A, Section 5.4] for any connection over this AMP should not exceed this value. The Max_PDU_Size parameter returned shall be Max80211PALPDUSize.

Controller_Type: *Size: 1 Octet*

Value	Parameter Description
0x01	802.11 AMP

PAL_Capabilities: *Size: 2 Octets*

Value	Parameter Description
0xXXXX	Bit 0: "Service Type = Guaranteed" is not supported by PAL = 0 "Service Type = Guaranteed" is supported by PAL = 1 Bits 15-1: Reserved (See L2CAP, [Vol 3] Part A, Section 5.6)

Bit 0 of the PAL_Capabilities parameter shall be set to 1 if the local 802.11 AMP device is capable of using EDCA (see [1] clause 9.9.1), otherwise it shall be set to 0.

AMP_ASSOC_Length: *Size: 2 Octets*

Value	Parameter Description
0xXXXX	AMP_ASSOC maximum length for this AMP Controller.

The 802.11 PAL shall set this to Max80211AMPASSOCLen.

Max_Flush_Timeout: *Size: 4 Octets*

Value	Parameter Description
0xXXXXXXXX	Maximum time period, in microseconds, which the AMP device may use to attempt to transmit a frame on a guaranteed logical link. This value is the sum of the durations of all 802.11 transmission attempts for a given frame. It should be chosen with the expectation that the 802.11 MAC may be denied access to the medium for a given transmission attempt. This may be due to interference from collocated radios, or otherwise. If the Controller is configured to retry frames for an unbounded time (there is no flushing at all), then the PAL shall set this value to 0xFFFFFFFF.

Best_Effort_Flush_Timeout: *Size: 4 Octets*

Value	Parameter Description
0xXXXXXXXX	The typical time period, in microseconds, which the AMP device may use to attempt to transmit a frame on a best effort logical link. This value is the sum of the duration of all 802.11 transmission attempts for a given frame. It should be chosen with the expectation that the 802.11 MAC is usually able to access the medium for each attempt. The value shall not exceed the value given in Max_Flush_Timeout. If the Controller is configured to retry frames for an unbounded time (i.e. there is no flushing at all), then the PAL shall set this value to 0xFFFFFFFF.

2.3 RESET COMMAND

See [Vol 2] Part E, Section 7.3.2.

In addition to setting the HCI parameters to their default values, when the 802.11 PAL receives an AMP HCI_Reset command it shall destroy all existing AMP physical links. Informative note: Non AMP links should not be destroyed.

2.4 READ FAILED CONTACT COUNTER COMMAND

When the 802.11 PAL receives an HCI Read_Failed_Contact_Counter command it shall return the number of consecutive incidents in which the remote device didn't respond after the flush timeout had expired, and the L2CAP packet that was currently being transmitted was automatically flushed. The Failed Contact Counter is specific to each logical link.

2.5 READ LINK QUALITY COMMAND

See [Vol 2] Part E, Section 7.5.3.

The meaning of the Link_Quality parameter in the Read Link Quality command is as shown below.

Link_Quality: *Size: 1 Octet*

Value	Parameter Description
0xXX	In an 802.11 AMP this unsigned 8-bit value shall be the Link Quality Indicator value. It shall be 0 if the Link Quality Indicator value is not available. Range: 0x00 ≤ N ≤ 0xFF

2.6 READ RSSI COMMAND

See [Vol 2] Part E, Section 7.5.4.

The meaning of the RSSI parameter in the Read RSSI command is as shown below.

RSSI: *Size: 1 Octet*

Value	Parameter Description
0xXX	This value is a signed 8-bit value, and is interpreted as an indication of arriving signal strength at the antenna measured in dBm. The value shall be 0x81 (-127 dBm) if the signal strength indication is not available.

2.7 SHORT RANGE MODE COMMAND

When the Host determines that the AMP peers may have insufficient separation to obtain full AMP throughput, it may enable Short Range Mode in the PAL. The Short Range Mode command may be used by the Host to indicate to the PAL whether or not to operate in Short Range Mode.

When in Short Range Mode, the PAL shall limit to ShortRangeModePowerMax the transmit power in dBm (measured at the antenna) for all 802.11 AMP ERP-OFDM frames transmitted by the device on the given physical link, as necessary to prevent exceeding the maximum input signal level of the peer. If the Host does not enable Short Range Mode or if the Host sets Short Range Mode to disabled, the PAL shall assume it may set the maximum transmit power for the link as it deems appropriate, respecting regulatory limits. If the AMP device is not able to limit its transmit power due to other extant connections then it may use a transmit power greater than ShortRangeModePowerMax in order to preserve those connections.

The meaning of the Short Range Mode parameter of the HCI_Short_Range_Mode command is as follows:

Short Range Mode: *Size: 1 octet*

Value	Parameter Description
0xXX	0x00–Short range mode shall be disabled in the PAL (default) 0x01–Short range mode shall be enabled in the PAL. 0x02...0xFF - Reserved

When the AMP controller receives the Short_Range_Mode command, it shall indicate a Command Status event. Later, after the MAC programming is completed, the controller shall generate a Short_Range_Mode_Change_Completed event. See Section 2.13.

2.8 WRITE BEST EFFORT FLUSH TIMEOUT COMMAND

Best_Effort_Flush_Timeout: *Size: 4 octets*

Value	Parameter Description
0xXXXXXXXX	0x00000000–0xFFFFFFFE: Best Effort Flush Timeout value in microseconds. 0xFFFFFFFF–No Best Effort Flush Timeout used. (default)

2.9 READ BEST EFFORT FLUSH TIMEOUT COMMAND

Best_Effort_Flush_Timeout: *Size: 4 octets*

Value	Parameter Description
0xXXXXXXXX	0x00000000–0xFFFFFFFE: Best Effort Flush Timeout value in microseconds. 0xFFFFFFFF–No Best Effort Flush Timeout used (default)

2.10 PHYSICAL LINK LOSS EARLY WARNING EVENT

Implementation of this event is not required for 802.11 AMPs.

2.11 PHYSICAL LINK RECOVERY EVENT

Implementation of this event is not required for 802.11 AMPs.

2.12 CHANNEL SELECTED EVENT

See [Vol 2] Part E, Section 7.7.52.

When an HCI Channel Selected event is indicated by the PAL with successful status, it signifies the local 802.11 MAC has been configured to start operating on the selected channel.

Subsequent to the HCI Channel Selected event, the initiating AMP device shall create an AMP_ASSOC containing its MAC address, the 802.11 PAL capabilities, and with only the selected channel in its preferred channel list. The host may obtain this AMP_ASSOC by issuing one or more HCI_Read_Local_AMP_ASSOC commands.

2.13 SHORT RANGE MODE CHANGE COMPLETED EVENT

See [Vol 2] Part E, Section 7.7.60.

After the PAL is notified of a change of state in Short Range Mode, it shall program the 802.11 device accordingly, unless the exceptions in Section 2.7 are in effect. When it has finished making such changes to the MAC configuration, or if the PAL has changed the state of the Short Range Mode autonomously, the PAL shall indicate this to the Host by indicating the Short_Range_Mode_Change_Event. The Short_Range_State parameter identifies the new configuration to the Host.

2.14 DATA STRUCTURES

2.14.1 AMP_ASSOC Structure

The AMP_ASSOC is an AMP type specific structure and appears in various HCI commands and events. The AMP_ASSOC structure used by the 802.11 PAL shall be composed of Type-Length-Value (TLV) triplets.

The general format of such a TLV, shown in Table 2.1, shall be a one-octet TypeID field, a two-octet Length field, and a variable length Value field. The length of the Value field in octets shall be exactly equal to the unsigned number represented by the Length field. A TLV with zero in its Length field shall contain no Value field. If an implementation does not have support for a triplet in a received AMP_ASSOC, it shall ignore the triplet and continue processing any remaining triplets.

The Length field is 2 octets in length and shall be ordered in the AMP_ASSOC according to Volume 2, [Part B] Section 6.2 on page 107. The Value field shall be interpreted as a stream of octets.

The TypeID of 0xFF shall be reserved for use in debugging.

TypeID	Length	Value
1 octet	2 octets	Variable number of octets

Table 2.1: TLV format

The set of defined TypeIDs is given in Table 2.2.

TypeID codepoint	Description	AMP_ASSOC inclusion
0x00	Reserved	NA
0x01	MAC address	Mandatory
0x02	Preferred channel list	Mandatory
0x03	Connected channel	Optional
0x04	802.11 PAL Capabilities list	Optional
0x05	802.11 PAL version	Mandatory
0x06 - 0xFE	Reserved	NA
0xFF	Reserved for use in debugging	NA

Table 2.2: TypeIDs used for 802.11 AMP TLVs

2.14.2 MAC Address

The PAL shall use the following format to report the IEEE MAC address of its local 802.11 MAC. The bit ordering of the address is given in [1] clause 7.1.1.

MAC_Address_TypeID: *Size: 1 octet*

Value	Parameter Description
0x01	MAC address TypeID

MAC_Address_Length: *Size: 2 octets*

Value	Parameter Description
0x0006	MAC address Length

MAC_Address_Specifier: *Size: 6 octets*

Value	Parameter Description
0xXXXXXXXXXXXX	MAC address specifier

2.14.3 802.11 PAL Capabilities

The 802.11 PAL Capabilities is a bit field of supported capabilities of the sending device.

802.11_PAL_Capabilities_TypeID: *Size: 1 octet*

Value	Parameter Description
0x04	802.11 PAL Capabilities TypeID

802.11_PAL_Capabilities_Length: *Size: 2 octets*

Value	Parameter Description
0x0004	802.11 PAL Capabilities Length

802.11_PAL_Capabilities_Specifier: *Size: 4 octets*

Bit format	Parameter Description
Bit 0	When set, signifies PAL capable of utilizing received Activity Reports
Bit 1	When set, signifies PAL is capable of utilizing scheduling information received in an Activity Report
Bits 2..31	Reserved

The 802.11 PAL Capabilities TLV is optional to include in the AMP_ASSOC. If an 802.11 PAL Capabilities TLV does not appear in an AMP_ASSOC, then the receiver shall interpret this as receiving an 802.11 PAL Capabilities TLV with a Value field containing the default value of all zeros.

Preferred_Channel_List_TypeID: *Size: 1 octet*

Value	Parameter Description
0x02	Preferred Channel List TypeID

Preferred_Channel_List_Length: *Size: 2 octets*

Value	Parameter Description
N	Length of Preferred Channel List

Preferred_Channel_List_Specifier: *Size: variable*

Value	Parameter Description
0xXXXXXXXX	Modified 802.11 Country Information element containing list of preferred 802.11 channels. See Section 3.2.3 for details.

2.14.4 Preferred Channel List

The Preferred Channel List is a non-empty list of channels supported and usable by the PAL. The receiver of the Preferred Channel List shall interpret the contents of the list with the assumption that the list is arranged in order of most preferred channel to least preferred channel. The format of the list is identical to the 802.11 Country information element, excluding the 802.11 information, element identifier, length, and pad fields. See [1] clause 7.3.2.9.

2.14.5 Connected Channel List

The Connected Channel List specifies the channels which may currently be in use by the sending device. If multiple channels are listed, the ordering gives no implied preference. The format of the list is the same as the 802.11 Country information element, without the element identifier,ength, and pad fields. See [1] clause 7.3.2.9.

Connected_Channel_List_TypeID: *Size: 1 octet*

Value	Parameter Description
0x03	Connected Channel List TypeID

Connected_Channel_List_Length: *Size: 2 octets*

Value	Parameter Description
0xXXXX	Length of Connected Channel List

Connected_Channel_List_Specifier: *Size: variable*

Value	Parameter Description
0xXXXXXXXX	Modified 802.11 Country Information element containing list of 802.11 channels. See Section 3.2.3 for details.

The Connected Channel TLV is optional to include in the AMP_ASSOC. If it is not included, then the receiver shall assume there are no channels which are currently in use by the sending device.

802.11_PAL_Version_TypeID: *Size: 1 octet*

Value	Parameter Description
0x05	802.11 PAL Version TypeID

802.11_PAL_Version_Length: *Size: 2 octets*

Value	Parameter Description
0x0005	Length of 802.11 PAL Version specifier

802.11_PAL_Version_Specifier: *Size: 1 octet*

Value	Parameter Description
0xXX	PAL Version

802.11_PAL_Company_Identifier: *Size: 2 octets*

Value	Parameter Description
0xXXXX	SIG Company identifier of 802.11 PAL vendor

802.11_PAL_Sub_Version: *Size: 2 octets*

Value	Parameter Description
0xXXXX	PAL Sub-version specifier

2.14.6 802.11 PAL Version

An AMP endpoint may need to discover the version of the remote PAL. The information in the 802.11 PAL Version TLV shall be composed of the PAL_Version from the HCI_Read_Local_Version_Information command, the Bluetooth SIG Company Identifier (see Assigned Numbers, [4]) for the provider of the PAL, and the PAL_Sub-version from the HCI_Read_Local_Version_Information command. The Company Identifier and PAL Sub-version parameters shall use the octet ordering as given in Volume 2, [Part B] Section 6.2 on page 107.

2.15 CONNECTION ACCEPT TIMEOUT CONFIGURATION PARAMETER

See [Vol 2] Part E, Section 6.7.

The default value of the Connection Accept Timeout used by the 802.11 PAL shall be 5 seconds.

3 PHYSICAL LINK MANAGER

A physical link joins an initiating device and a responding device. The initiating device is the device on which the HCI_Create_Physical_Link command was issued. The responding device is the one on which the HCI_Accept_Physical_Link command was issued. Physical link creation collisions are resolved at a higher level, by the AMP Manager.

Support for the 802.11 ERP (see clause 19 of [1]) shall be mandatory for 802.11 AMP devices, but other PHY types may be supported. Channels 1 (2412 MHz) through 11 (2462 MHz) shall be supported for interoperability.

A physical link represents a transport between a single local 802.11 AMP device and a single remote device with a matching 802.11 AMP. The AMP may support multiple physical links (representing different remote devices) at one time.There is a unique binding between the 802.11 MAC addresses of the devices and the physical link.

For a physical link to exist in the CONNECTED state the two devices must have established a PTKSA as described in [1] clause 8.4.1.

3.1 PHYSICAL LINK STATE MACHINE

3.1.1 General rules

The behavior of the PAL with respect to physical links is described in terms of a finite state machine. The state machine describes the behavior of the PAL for an individual physical link; extension to multiple physical links is outside the scope of this document. The sequence of external stimulus and behavior at the logical HCI shall be as though this state machine is present in the implementation. Similarly, the sequence of stimulus and behavior at the 802.11 radio interface shall be as though this state machine is present in the implementation.

3.1.2 State Diagram

The possible state events and transitions are summarized in this diagram. The diagram itself is Informative.

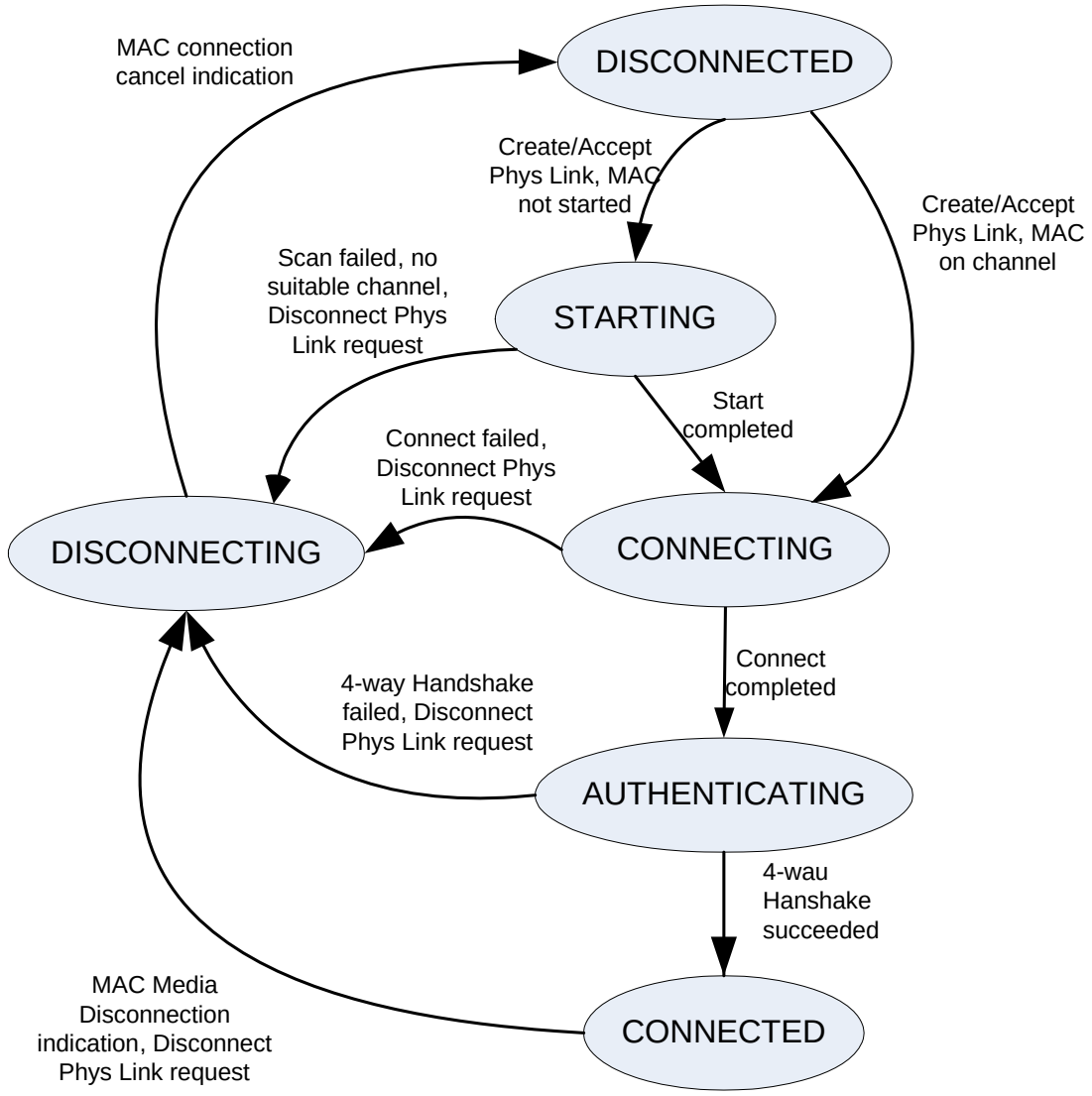

Figure 3.1: Physical Link finite state machine diagram

3.1.3 States

The following states have been defined to clarify the protocol. The states apply to an individual physical link. At power-up or reset, no physical links exist and the state is the DISCONNECTED state.

DISCONNECTED—The physical link is not active, and this is the initial state.

STARTING—Channel has been selected, the MAC is initializing.

CONNECTING—The initiating device waits for messages from the peer device; the responding device commences network connection operations.

AUTHENTICATING—The devices perform the security association process.

CONNECTED—A secure physical link has been established with the remote device.

DISCONNECTING—The PAL waits for the MAC to complete disconnection and return to the initial state.

3.1.4 Events

The following events may cause transitions in the state diagram.

Create/Accept Physical Link—HCI commands from the local host which affect the state of a physical link.

Connection Accept Timeout—The timeout for this physical link create/accept has expired.

MAC Start Completed—The MAC has started operation on the given channel. This includes beaconing and listening for connections.

MAC Start Failed—The MAC has failed to start on the specified channel for any reason.

MAC Connect Completed—The MAC has completed the process of connecting to a peer in a specified channel.

MAC Connect Failed—The MAC fails to connect on the selected channel for any reason

MAC Media Disconnection Indication—MAC has signaled an existing connection is lost to a remote device.

MAC Connection Cancel Indication—MAC has completed the request to cancel a prior connection.

HCI Disconnect Physical Link Request—The host has given a disconnect request to the PAL.

4-way Handshake Fails—The establishment of a secure link for this physical link has failed.

4-way Handshake Succeeds—The establishment of a secure link for this physical link has completed successfully.

3.1.5 Conditions

The following conditions are potential qualifiers for actions and state transitions to occur.

MAC not yet started in selected channel—The MAC is not beaconing in any PHY channel, or is beaconing in a different channel than the one specified.

MAC already in selected channel—The MAC is already beaconing in the selected PHY channel.

No suitable channel—No suitable channel can be selected, or the selected channel cannot be joined for any reason.

Device is initiator—Role of device is physical link initiator due to reception of Physical Link Create command.

Device is responder—Role of device is physical link responder due to reception of Physical Link Accept command.

3.1.6 Actions

In some cases, a state transition causes one or more of the following actions to occur. The actions for a state transition shall occur in their entirety before any subsequent state transition occurs, as follows.

Determine selected channel—Using information from the AMP_ASSOC of the remote device and preferences from the local device, select a channel

Set or clear Connection Accept Timeout —Start or stop the timer for the current physical link.

Set or clear NeedPhysLinkCompleteEvent, DiscRequested —Set or clear state variables which control subsequent behavior.

Set or PhysLinkCompleteStatus—Sets command status to be indicated to Host.

Signal MAC to start on channel—Command the MAC to start the process of connection on the specified channel.

Issue MAC connection command—Command the MAC to attempt to connect to the remote device.

Initiate 4-way handshake—Command the authenticator to send the first security message.

Send HCI event—send the indicated HCI event to the local Host.

Cancel MAC connect operation—This physical link no longer needs to be present on this channel. The PAL signals the MAC to delete the connection.

Signal MAC to disconnect peer—Command MAC to send disconnection frame to peer.

3.1.7 DISCONNECTED State

This is the initial state. No timers shall be active.

Event	Condition	Action	Next State
HCI_Create_Physical_Link command	MAC not yet in selected channel	Determine selected channel Request MAC to start on channel Set Connection Accept timeout Set NeedPhysLinkCompleteEvent Set PhysLinkCompleteStatus to 0x00 (no error)	STARTING
HCI_Create_Physical_Link command	MAC already in selected channel	Determine selected channel Send HCI Channel Select event Set Connection Accept Timeout Set NeedPhysLinkCompleteEvent Set PhysLinkCompleteStatus to 0x00 (no error)	CONNECTING
HCI_Create_Physical_Link command	No suitable channel	Determine selected channel Send HCI Physical Link Complete event with Status set to Connection Rejected due to Limited Resources (0x0D)	DISCONNECTED
HCI_Accept_Physical_Link command	MAC not yet in channel	Signal MAC to start on channel Set Connection Accept Timeout Set NeedPhysLinkCompleteEvent Set PhysLinkCompleteStatus to 0x00 (no error)	STARTING
HCI_Accept_Physical_Link command	MAC already in that channel	Set Connection Accept Timeout Issue MAC connection command Set NeedPhysLinkCompleteEvent Set PhysLinkCompleteStatus to 0x00 (no error)	CONNECTING
HCI_Accept_Physical_Link command	No suitable channel	Send HCI Physical Link Complete event with Status set to Connection Rejected due to Limited Resources (0x0D)	DISCONNECTED

Table 3.1: DISCONNECTED State event table

3.1.8 STARTING State

This state is used to begin MAC operation, if required.

Event	Condition	Action	Next State
Connection Accept Timeout		SetPhysLinkCompleteStatus to Connection Timeout (0x08) Cancel MAC connect operation	DISCONNECTED
HCI_ Disconnect_ Physical_Link command		Indicate HCI Disconnection Physical Link Complete event with Status set to Success (0x00) and Reason set to Connection Terminated By Local Host (0x16) Clear Connection Accept Timeout Cancel MAC connect operation Set PhysLinkCompleteStatus to Unknown connection identifier (0x02)	DISCONNECTED
MAC Start Completed	Device is link originator	Issue HCI Channel Select event	CONNECTING
MAC Start Completed	Device is link responder	Issue MAC connection command	CONNECTING
MAC Start Failed		Clear Connection Accept Timeout Set PhysLinkCompleteStatus to Connection Limit Exceeded (0x09)	DISCONNECTED

Table 3.2: STARTING State event table

3.1.9 CONNECTING State

This state is used to cause the devices to start communication with each other, over the 802.11 media.

Event	Condition	Action	Next State
Connection Accept Timeout		Cancel MAC connect operation Set PhysLinkCompleteStatus to 0x08 (Accept timeout)	DISCONNECTING
MAC Connect Completed	Device is responder		AUTHENTICATING

Table 3.3: CONNECTING State event table

Event	Condition	Action	Next State
MAC Connect Completed	Device is initiator	Initiate four way handshake	AUTHENTICATING
HCI_Disconnect_Physical Link command		Indicate HCI Disconnection Physical Link Complete event with Status set to Success (0x00) and Reason set to Connection Terminated By Local Host (0x16) Set PhysLinkCompleteStatus to Unknown connection identifier (0x02) Clear Connection Accept Timeout Cancel MAC connect operation	DISCONNECTING
MAC Connect Failed		Cancel MAC connect operation Set PhysLinkCompleteStatus to 0x16 (Failed connection)	DISCONNECTING

Table 3.3: CONNECTING State event table

3.1.10 AUTHENTICATING State

The AUTHENTICATING state is entered when the two devices have established an unsecured connection.

While in the AUTHENTICATING state the two devices shall perform the 802.11 RSN 4-way handshake as described in Section 3.5, establish a PTKSA, and insert key material into the MAC.

Event	Condition	Action	Next State
Connection Accept Timeout		Set PhysicalLinkCompleteStatus to 0x08 (Accept timeout) Cancel MAC connect operation	DISCONNECTING
HCI_Disconnect_Physical Link command		Indicate HCI Disconnection Physical Link Complete event with Status set to Success (0x00) and Reason set to Connection Terminated By Local Host (0x16) Set PhysLinkCompleteStatus to Unknown connection identifier (0x02 Clear Connection Accept Timeout Signal MAC to disconnect peer	DISCONNECTING

Table 3.4: AUTHENTICATING State event table

Event	Condition	Action	Next State
4-way Handshake Failed		Signal MAC to disconnect peer Set PhysLinkCompleteStatus to 0x05 (Authentication failure) Clear Connection Accept Timeout	DISCONNECTING
4-way Handshake Succeeded		Send HCI Physical Link Complete event with Status set to Success (0x00) Configure MAC with Link Supervision Timeout Clear Connection Accept Timeout Clear NeedPhysLink CompleteEvent	CONNECTED

Table 3.4: AUTHENTICATING State event table

3.1.11 CONNECTED State

The CONNECTED state is the operational state for the physical link.

Event	Condition	Action	Next State
HCI_ Disconnect_ Physical Link command		Indicate HCI Disconnection Physical Link Complete event with Status set to Success (0x00) and Reason set to Connection Terminated By Local Host (0x16) Clear Connection Accept Timeout Signal MAC to disconnect peer	DISCONNECTING
MAC Media Disconnection Indication		Indicate HCI Disconnection Logical Link Complete event for each logical link, with Status set to Success (0x00) and Reason set to Connection Terminated by remote host Cancel MAC connect operation	DISCONNECTING

Table 3.5: CONNECTED State event table

3.1.12 DISCONNECTING State

This is a transit state to the DISCONNECTED state and is used to prevent the PAL from preparing to accept or create new connections while a given connection is being deleted by the PAL and the MAC. The PAL shall exit from this state when the MAC is ready to accept new connections.

Event	Condition	Action	Next State
MAC Connection Cancel Indication	PhysLinkCompleteEvent is set	Send HCI Physical Link Complete with status set to PhysLinkCompleteStatus	DISCONNECTED
MAC Connection Cancel Indication	PhysLinkCompleteEvent is clear		DISCONNECTED

Table 3.6: DISCONNECTING State event table

3.2 CHANNEL SELECTION

3.2.1 Overview

Peer to peer networks in 802.11 can incur long connection latency unless there is out of band coordination. Also, one or both of the AMP devices may already be connected to an external network and may therefore need to remain on a given channel. To solve these problems, the data structures and algorithms specified here may be used to provide a coordination service during the creation of the physical link.

An 802.11 channel should be chosen based on up-to-date dynamic information obtained from both AMP peers. The channel selection process is outside the scope of this document but the selected channel shall meet the following criteria:

Shall be legally permitted for use according to local regulatory agencies. If no locale is known, then a common mode configuration shall be used. See Section 3.2.2.

- Shall not use a 40 MHz channel width in the 2.4 GHz ISM band.
- Shall be present in the Preferred Channel List TLV in the AMP_ASSOC given in the HCI Write Remote AMP ASSOC command.
- Should avoid forcing either AMP device to move its channel.
- Should favor channels with least impact on BR/EDR operation.

The initiating PAL may not be able to select a suitable channel or the responding PAL may reject the selected channel. If the selection process cannot identify a channel, then the physical link establishment shall be aborted.

The selected channel is transmitted to the responding AMP manager as a field in the AMP_ASSOC parameter in the AMP Create Physical Link message, and given to the responding PAL via the HCI Write Remote AMP ASSOC command.

3.2.2 Regulatory

Even though IEEE 802.11 devices operate in unlicensed spectral bands, the unlicensed bands and the allowable behavior in each band is specific to a country and is enforced by spectrum regulatory bodies. See annex I of [1] for example regulations and references to relevant documents. There is a consistent set of rules for operation in the 2.4 GHz ISM band, as described in the following text.

802.11 AMP equipment providers interpret these rules in independent ways and meet the regulations with independent mechanisms so specification of an algorithm to implement regulatory compliance for all situations is beyond the scope of this document.

If an implementation has knowledge of local regulatory constraints then such an implementation may be able to improve certain characteristics of the AMP link, for example by selecting a 5 GHz channel of operation to provide better performance with the collocated BR/EDR radio.

3.2.3 Specification of Channel Identifiers

The format of Preferred Channel Lists and Connected Channel Lists is specified by the 802.11 Country information element in [1] clause 7.3.2.9. Tables including channel lists and required behaviors are given for three regulatory domains in [1] normative annex J. From this it is seen that to resolve all ambiguity of channel identification, the country string as specified in [4] and the regulatory class are needed. Multiple regulatory triplets may be given in the same Country information element. If sub-band triplets are given then they are to be assumed to modify the immediately prior regulatory triplet. Sub-band triplets may be specified in any order, but they must not contain overlapping channel sets, as noted in [1] clause 7.3.2.9.

The Preferred Channel List shall be included in messages containing AMP_ASSOC fields exchanged over the BR/EDR link during construction of the physical link. The Preferred Channel List shall contain exactly one country string and one or more regulatory triplets. If the current locale is unknown, then the non-country designator of 'XXX' (see definition of dot11CountryString in [1] normative Annex D) and regulatory class of 254 shall be used. The set of channels preferred when using this designator and regulatory class shall be channels 1 through 11 in the 2.4 GHz ISM band, with channel 1 the most preferred of the set. Supporting examples follow.

In the first example preferred channel list, we assume the PAL does not know its locale and it prefers operation on channel 1 in the 2.4 GHz ISM band. The absence of a specific sub-band triplet implies all channels 1 through 11 are acceptable.

In the next example, assume the PAL again does not know its locale, but it prefers operation only on channels 6, 7 and 11, with 11 the most preferred.

Field	Value	Comments
Country String	'XXX'	Applies to entire table. Signifies non-country (mobile applications).
Regulatory Extension Identifier	201	
Regulatory Class	254	In context of Country String. Signifies 2.4 GHz ISM band channels 1 through 11 unless modified by specific channel list.
Coverage Class	0	Not used by AMPs.

Table 3.7: Simple preferred channel list

Field	Value	Comments
Country String	'XXX'	Applies to entire table. Signifies non-country (mobile applications)
Regulatory Extension Identifier	201	
Regulatory Class	254	In context of Country String. Signifies 2.4 GHz ISM band channels 1 through 11 unless modified by specific channel list.
Coverage Class	0	Not used by AMPs.
First Channel	11	First sub-band triplet
Number of channels	1	
Maximum transmit power level	20	
First Channel	6	Second sub-band triplet
Number of channels	2	
Maximum transmit power level	20	

Table 3.8: Preferred channel list with non-contiguous channels

In the final example, assume the PAL knows that it is operating in the US and it has determined that all channels in the 2.4 GHz ISM band and 2 channels in the 5 GHz U-NII I band should be communicated to the other peer. It is also assumed that the PAL has determined that channels in the 2.4 GHz band are preferred to the 5 GHz channels. The PAL would use the following Preferred Channel List.

Field	Value	Comments
Country String	'US'	Applies to entire table.

Table 3.9: Mixed band preferred channel list example

Field	Value	Comments
Regulatory Extension Identifier	201	First regulatory triplet.
Regulatory Class	12	In context of Country String, specifies channels 1 through 11, inclusive, in 2.4 GHZ ISM band. Absence of specific channel list signifies all channels in this (FCC) regulatory class are available to the AMP.
Coverage Class	0	Not used by AMPs.
Regulatory Extension Identifier	201	Second regulatory triplet.
Regulatory Class	1	In context of Country String, specifies 20 MHz channel spacing. Presence of subsequent channel list signifies not all channels in the regulatory class are available to the AMP.
Coverage Class	0	Not used by AMPS.
First channel	36	First sub-band triplet.
Number of channels	2	Channels 36 and 40 are included, with channel 36 more preferred than channel 40.
Maximum transmit power level	20	Units in context of Country String (dBm, mW, etc).

Table 3.9: Mixed band preferred channel list example

3.3 802.11 LINK CREATION

3.3.1 Starting the AMP Network

After the initiator has selected a channel of operation, the initiating PAL shall instruct the MAC to commence network operation, including beaconing. The 802.11 AMP devices shall use probe responses and/or beacons (respecting regulatory restrictions) to advertise MAC capabilities.

AMP devices shall use beacons to enable effective coexistence with neighboring 802.11 networks. For example, non-AMP devices can discover the existence of AMP networks and such devices can also determine the EDCA characteristics of the network. In regulatory domains where DFS operation is required, an AMP device may need to passively observe the channel to check for radar, as described in [1] clause 11.9, before it may start to beacon. For AMP operation, the maximum beacon period shall be Max80211BeaconPeriod.

The SSID information element for AMP devices shall be of the form 'AMP-xx-xx-xx-xx-xx-xx' (with no null termination and no quotes) where the "x" charac-

ters are replaced by the lowercase hexadecimal characters of the MAC address of the local 802.11 device. This is referred to here as the AMP SSID. For example, if the MAC address of a device is 00:01:02:0A:0B:0C, then the AMP SSID would be 'AMP-00-01-02-0a-0b-0c'.

AMP beacons shall be indicated as ESS-style beacons in the capability information field as described in [1] clause 7.3.1.4 and shall include the AMP SSID. Beacons shall be sent with standard beacon channel access semantics as given in [1] clause 11.1.2.1. The contents of the Address2 and Address3 fields for beacons and probe responses shall be the MAC address of the transmitting AMP node. Probe requests sent to AMP peers shall use the MAC address of the intended recipient as the content of the Address1 and Address3 fields. In [1] clause 7.2.3.1 contains the details of the format of 802.11 beacon frames and [1] clause 7.2.3.9 contains the details of the format of 802.11 probe response frames, including a list of the required information elements is specified.

3.3.2 Establishing the 802.11 Link

AMP devices may choose to obtain the timebase of their peer through the timestamp field in 802.11 beacons and probe responses. The respective Target Beacon Transmission Time (TBTT) of the peers may be independent and occur at different times with respect to one another. The beacon period of the devices may be different from one another.

AMPs shall use RSN security. RSN security requires the use of 802.11 open authentication as specified in [1] clause 8.2.2.2. The AMP responder shall send the first frame of the 802.11 authentication transaction sequence, with transaction ID of 0. Address fields Address1 and Address3 shall contain the initiator's address.

The AMP initiator shall respond with an 802.11 authentication frame with transaction ID of 1. Address fields Address2 and Address3 shall contain the initiator's address.

AMPs shall use 802.11 (re)association frames to select features advertised by their peer. The AMP responder shall send an (re)association request frame. Address fields Address1 and Address3 shall contain the initiator's address.

The AMP initiator shall reply with an (re)association response frame. Address fields Address2 and Address3 shall contain the initiator's address. The frame body contents of both the (re)association request and response are given in [1] clause 7.2.3.4 and [1] clause 7.2.3.5, respectively.

After successful 802.11 (re)association, unencrypted security frames may be transmitted on the physical link.

3.3.3 Address Fields of Data Frames

The 802.11 AMP shall support the use of four address field frame format for all data frames after (re)association.

To use data frames with four address fields the AMP shall set the ToDS and FromDS bits in the FrameControl field equal to one. The addresses used for such frames shall be arranged as shown in Table 3.10. Because there is no frame forwarding by AMPs, the RA is the same as the DA and the TA is the same as the SA.

Field	Value
Address1	Receiver Address (RA)
Address2	Transmitter Address (TA)
Address3	Receiver Address (RA)
Address4	Transmitter Address (TA)

Table 3.10: Four address frame address fields

3.3.4 Admission Control

AMP devices should respond to probe requests with a probe response.

If Address2 of an 802.11 association request does not match the MAC address from the AMP Assoc received during construction of the current physical link and if the SSID in the association request matches the AMP SSID of the receiving AMP device, then the receiver shall not transmit an 802.11 association response with a status code of 0 (success).

3.4 PHYSICAL LINK MAINTENANCE

After a physical link is created, an AMP device shall monitor the state of the link and provide an indication of link failure to the Host if no frames are received from the AMP physical link peer for a period of Link Supervision Timeout (LSTO). Correctly decrypted data frames received from the peer shall be evidence of an existing physical link, but this is not true for 802.11 ACK and CTS control frames.

If the PAL has not received a correctly decrypted data frame for a period less than LSTO, then it shall solicit a response from its peer in an attempt to receive the response before the expiration of LSTO. For this purpose, link supervision request/response protocol identifiers are given in Table 5.2 and may be used to construct link supervision data frames. When a PAL receives a data frame with a protocol identifier of Link Supervision Request, it shall reply by transmitting a data frame with a protocol identifier of Link Supervision Reply.

3.5 PHYSICAL LINK SECURITY

3.5.1 Obtaining Key Material

The Host provides key material for use with a physical link as the Dedicated_AMP_Link_Key parameter of the HCI_Create_Physical_Link or HCI_Accept_Physical_Link command. See [Vol 2] Part E, Section 5.2 for octet ordering of multi-octet HCI parameter values. The Dedicated_AMP_Link_Key parameter shall be interpreted by the PAL as a 256 bit integer and used directly as a Pairwise Master Key (PMK) by the two devices to create a PTK. Further key material is derived from the PTK.

3.5.2 Creating a PTK

The 802.11 4-way handshake is used to create a PTK from the PMK. See [1] clause 8.5.3.

Entities known as authenticator and supplicant are used to exchange security information in the 802.11 security architecture. Since the responding AMP device receives the 802.11 (re)association response frame, it shall serve the role of supplicant; the initiating AMP device shall serve the role of authenticator. The authenticator sends the first and third messages of the 4-way handshake and the supplicant sends the second and fourth messages. Only a single instance of the 4-way handshake is run by the 802.11 AMP to establish its secure connection.

If a 4-way handshake fails then the PAL physical link state machine shall transition to the DISCONNECTING state as described in Section 3.1.10.

The supported security configurations of the peers are given in the RSN information element in beacons or probe responses exchanged by the AMP devices. The PAL shall enforce the following restrictions:

- UseGroup (00:0F:AC:00), WEP-40 (00:0F:AC:01), TKIP (00:0F:AC:02), and WEP-104 (00:0F:AC:05) shall not be allowed as valid pairwise cipher suites
- The only valid AKMP shall be PSK (00:0F:AC:02) or a vendor-specific AKMP
- The NoPairwise bit (B1) of the RSN Capabilities field shall not be allowed as a valid selection
- The group cipher shall be CCMP (00:0F:AC:04)

The supplicant shall ensure a proper intersection of capabilities exists subject to the constraints above. It may also choose a set according to its policy requirements and may decide to terminate a connection attempt if no policy match is found. Either the supplicant or the authenticator may choose to terminate a connection after AMP Create Physical Link Response is sent by indicating an HCI Physical Link Complete event with an unsuccessful status code.

The AMP key received from the host may be marked with a Link_Type of debug. If it is, then the local PAL may choose to use the key, or it may choose to refuse to establish the link, according to its own policy. The management of this debug key policy is outside the scope of this document.

The PAL shall use the AMP key as a Pairwise Master Key (PMK) according to the 802.11 key hierarchy described in [1] clause 8.5.1.2 and shall exchange nonces (as part of a 4-way handshake) to add liveness in the derivation of a Pairwise Transient Key (PTK). The PTK shall be derived specifically for a session started by the HCI_Create_Physical_Link_Request command and shall be destroyed when the session is terminated by the HCI_Disconnect_Physical_Link command. The construction of the AAD used with CCMP shall include Address4 in the manner illustrated in [1] clause 8.3.3.3.2, Figure 8-17.

3.5.3 Using Encryption

Encryption keys are derived from the PTK and are inserted into the 802.11 MAC after the 4-way handshake has successfully completed. All data frames after this point are encrypted and this state persists until the physical link is destroyed.

3.5.4 Refreshing a PTK

The PTKSA, if any, shall be discarded when the physical link to which it applies enters the DISCONNECTED state. At this point the Host may reestablish the connection which will cause the creation of a new PTKSA.

The PTKSA shall be discarded in the event its receive sequence counter becomes exhausted. Since this is a 48 bit counter, this is an unlikely event.

To establish a new PTK, the physical link shall be torn down and re-established.

3.5.5 Transporting Security Handshake Messages

Security handshake messages shall be sent after the physical link is created, but before any logical link is created between the two devices.

The SNAP header composed of the OUI of the Bluetooth SIG and the protocol identifier given in Table 5.2 shall be used to distinguish AMP 4-way handshake messages from external security traffic.

3.6 PHYSICAL LINK SUPPORT FOR QOS

3.6.1 QoS Advertisement

If an AMP device supports 802.11 EDCA and is configured to use it, then it should indicate this to the host by setting the Guaranteed_Service_Type_Supported field of the PAL_Capabilities parameter included in the HCI_Read_Local_AMP_Info command.

If QoS is offered by an AMP device, it shall advertise EDCA in beacon and probe response frames by including the EDCA Parameter Set information element, as given in [1] clause 7.3.2.29. Note:The EDCA Parameter Set information element is also included in (re)association response frames. For AMP devices, the use of the EDCA parameter set shall be as follows. The QoS Info field shall be zero. The ACI, AIFSN, and TXOPlimit values of the AC parameter record shall be as given in [1] Table 7-37. The ECWmin and ECWmax values are specific to the 802.11 PHY type and are documented in their appropriate clauses in [1] The Admission Control Mandatory (ACM) bit should be zero.

The QoS Capability information element is described in [1] clause 7.3.2.35. The QoS Info field (see [1] clause 7.3.1.17) is contained in the QoS Capability information element as well as the first field of the EDCA Parameter Set information element. AMP devices shall not include the QoS Capability information element in beacons or probe responses.

The content of the QoS Info field is different depending on if the enclosing frame is a beacon or probe response, or if it is a (re)association request. The QoS Info field is not included in (re)association response frames.

802.11 Information element	Frame(s) contained in
QoS Capability information element	Association Request, Reassociation Request
EDCA Parameter Set information element	Beacon, Probe Response, Association Response, Reassociation Response

Table 3.11: EDCA advertisement and negotiation

The EDCA AC parameters shall not change unless the physical link is torn down and re-established. Therefore the EDCA Parameter Set Update Count subfield of the QoS Info field in beacons and probe responses shall be zero.

3.6.2 Negotiation

To request the use of EDCA on the physical link an AMP device shall include a QoS Capability element in its (re)association request. If the AMP peer rejects the EDCA negotiation then the (re)association response frame shall have no EDCA Parameter Set element included. If the (re)association response frame has a status code of successful and the EDCA Parameter Set element is included, then the link shall be considered to support EDCA.

4 LOGICAL LINK MANAGER

A logical link provides a (possibly) bidirectional path for in-order delivery of L2CAP PDUs, with a specified set of traffic characteristics. Each logical link exists with respect to a specific physical link in the CONNECTED state.

A logical link is characterized by a pair of Extended Flow specification parameter sets, as described in [1]. An Extended Flow specification parameter set is referred to simply as a flow spec here.

Each logical link is classified as either Best Effort or Guaranteed. The logical link is known as Best Effort if either of its flow specs indicates Best Effort in its Service Type field. Otherwise, it is known as Guaranteed.

Support for Guaranteed links is optional; the PAL may reject any guaranteed flow spec. If 802.11 QoS (see Section 3.6.1) is not supported by both endpoints, then there is no traffic prioritization in the MAC.

4.1 LOGICAL LINK CREATION

Creation of a logical link is initiated by the HCI_Create_Logical_Link or HCI_Accept_Logical_Link command. If the physical link is not in state CONNECTED, the PAL shall send the HCI Logical Link complete event with status set to Command Disallowed (0x0C). The Controller shall indicate successful completion of the logical link creation using the HCI Logical Link Complete event, with Status set to Success (0x00).

4.1.1 Logical Link Handles

When a Logical Link is created or accepted the PAL shall create a Logical Link handle, or logical handle. The logical handle is included in HCI ACL data packets received from the HCI in the Handle field; the PAL may use the logical handle to help it select the egress physical link. If the Host delivers an HCI ACL data packet to the AMP Controller with an invalid Handle field, then the AMP shall discard the ACL data packet and the PAL may indicate a Number of Completed Blocks or Number of Completed Packets event (depending on the configuration of the Flow Control setting) using the Host-supplied logical handle.

When the PAL receives data frames from the MAC, it may use the source address to determine the physical link. It shall place the physical link handle corresponding to that link into the Handle field of the HCI ACL data packet before the packet is indicated to HCI. Note: the PAL is not required to determine a logical handle for frames it receives from the MAC.

4.1.2 Null Traffic Logical Links

Data frames may be discarded if attempted on a No Traffic flow.

4.1.3 Best Effort Logical Links

There is a single logical link used to transport all Best Effort traffic.

If EDCA was successfully negotiated during the physical link creation, the PAL shall map all egress frames marked with the Best Effort logical handle to a UP of either BEUserPrio0 or BEUserPrio1, inclusive. Otherwise, if EDCA is not used, no mapping is required and the UP shall be set to zero by the PAL.

4.1.4 Guaranteed Logical Links

Flow specs requesting guaranteed service may be accepted by the PAL if the physical link was negotiated with 802.11 QoS.

EDCA shall be used by the 802.11 AMP devices if supported and available for use by both devices. The PAL shall provide a priority field associated with each egress 802.11 frame. The priority field is interpreted by the MAC as a User Priority (UP) and is mapped to access category as specified in [1] clause 9.1.3.1.

If the 802.11 link was negotiated with QoS, then on receiving an HCI_Create_Logical_Link or HCI_Accept_Logical_Link command specifying a Guaranteed transmit flowspec the PAL shall use a UP with a value between MinGUserPrio and MaxGUserPrio, inclusive. The determination of precisely which UP to use is outside of the scope of this specification. A flow spec expresses maximum bandwidth as the product of inter-SDU arrival time and maximum SDU size. The PAL may use the specified maximum bandwidth or latency requirements from the flow spec to establish mappings of logical handles to UPs.

If a request for a guaranteed link cannot be mapped to a UP in the range specified above, it may be rejected.

The PAL shall reject all requests to establish a guaranteed logical link with a flow spec expressing a maximum bandwidth which is greater than the Total_Bandwidth parameter of the Read Local AMP Info command minus the sum of the requested maximum bandwidths of all existing guaranteed logical links.

The transmitter shall store the logical channel to UP mapping for application to future frame transmissions. The receiver shall create an HCI ACL data header and insert the physical link handle into the Handle field of the packet before indication to the Host.

4.2 LOGICAL LINK UPDATES

The Host may indicate a change of traffic requirements on a logical link by using the HCI_Flow_Spec_Modify command. An HCI_Flow_Spec_Modify command will not change the Service Type of the flow specs for a logical link.

When the PAL receives an HCI_Flow_Spec_Modify command, it should validate that the new flow spec requirements can be met with the available resources. If not, then the PAL should reject the command.

4.3 LOGICAL LINK DELETION

The PAL shall rely on upper layers to flush any frames before a logical link is destroyed. See explicit flush in Section 5.3. The PAL may choose to re-use the same logical link identifier for new logical links even on the same physical link.

The PAL should recover any allocated QoS resources when the logical link is deleted. In particular, when deallocating resources for a flow spec which expressed a maximum bandwidth, the PAL should subtract that parameter from the total allocated bandwidth.

5 DATA MANAGER

5.1 ENCAPSULATION

The PAL shall advertise a maximum PDU length of Max80211PALPDUSize octets and each L2CAP PDU is transmitted by the MAC as a single MSDU. The MSDU boundary determines the L2CAP PDU boundary for the receiver.

Before transmission, the PAL shall remove the HCI header, add LLC and SNAP headers and insert an 802.11 MAC header. The LLC/SNAP frame format used by the 802.11 AMP is shown in Table 5.1.

	DSAP	SSAP	Control	OUI	Protocol	Frame Body
Value	0xAA	0xAA	0x03	00:19:58	XX:XX	
Octets	1	1	1	3	2	0-1492

Table 5.1: 802.11 AMP LLC/SNAP encapsulation

The protocol identifiers shall be as shown in Table 5.2:

Value	Protocol Description	Logical Link
0x0000	Reserved	N/A
0x0001	L2CAP ACL data	AMP-U
0x0002	Activity Report	AMP-C
0x0003	Security frames	AMP-C
0x0004	Link supervision request	AMP-C
0x0005	Link supervision reply	AMP-C
0x0006-0xFFFF	Reserved	N/A

Table 5.2: Protocol Identifiers

All 802.11 data frames on the AMP link shall be sent with ToDS and FromDS bits in the Frame Control field both set to one. For a description of the Frame Control field, see [1] clause 7.1.3.1. If QoS was negotiated on the physical link between the peers then the QoS Control field shall be included in the MAC header, otherwise it shall not be included.

The receiving device can determine the physical link identity from the TA of the received frame. The receiving PAL shall decapsulate the frame from 802.11 and into the HCI ACL data encapsulation.

5.2 COEXISTENCE AND LOCAL INTERFERENCE

5.2.1 Interference from Collocated Radios

Both the BR/EDR radio and the ERP of 802.11 AMP operate in the 2.4GHz ISM band and mechanisms are required to help mitigate potential interference. The BR/EDR radio subsystem on an 802.11 AMP capable device should employ AFH to attempt to avoid interference of overlapping transmissions on the medium.

Protocols specified in [1] are designed to mitigate interface from non-collocated radios.

On systems where the devices are collocated such that radio isolation is insufficient to mitigate interference, the use of the shared medium should be time-division multiplexed to ensure only one of the interfering radios will gain access to the medium. In the case of the BR/EDR radio and the 802.11 radio operating in the 2.4GHz band, the PAL should ensure that local high priority BR/EDR traffic such as SCO, eSCO and ACL packets carrying A2DP information have higher priority over potentially interfering local 802.11 AMP packets. The PAL may ensure this prioritization through many ways including employing the methods described in [3] but the exact methods are outside the scope of this document.

Interference can also arise between the 802.11 AMP radio and collocated licensed band radios (LBRs) operating in adjacent bands to the ISM spectrum. Due to 802.11 AMP transmissions, the collocated LBR may not be able to receive transmissions from its peer LBR. Again the use of the medium should be time-division multiplexed to ensure only one of the radios will gain access to the medium at one time. In the case of the 802.11 AMP radio and an LBR, the PAL should ensure that the local LBR packets have higher priority over potentially interfering local 802.11 AMP packets. Although the exact methods are outside the scope of this document, similar collocated radio interference mitigation mechanisms as described above may be used.

5.2.2 Unavailability of Remote Peer

Distributed AMP devices may experience 802.11 performance degradation due to simultaneous BR/EDR activity occurring at one of the AMP peers. Local interference mitigation schemes (see Section 5.2.1) employing time-divided access to the medium will result in the 802.11 radio being periodically unavailable to its peer. The PAL attempting to transmit to a periodically unavailable AMP device may employ techniques to allow its transmissions to consume minimal airtime and power while still achieving acceptable performance for its own transmissions and those of neighboring networks.

When a physical link is created, the PAL shall configure the 802.11 MAC to use RTS/CTS signaling by default. This behavior may be modified by using Activity Reporting as given in Section 5.2.3.

5.2.3 Activity Reports

AMP Activity Reports provide an optional mechanism for the 802.11 PAL to inform its 802.11 AMP peer of events which may result in the 802.11 device being unavailable to receive 802.11 traffic. Activity Reports may also be used to inform a peer of the absence of local interference thereby allowing the remote peer to disable its RTS/CTS signaling.

Examples of simultaneous traffic include, but are not limited to:

1. BR/EDR SCO/eSCO streams
2. 802.11 traffic required to maintain an external 802.11 connection
3. Traffic from other collocated radios such as LBRs in the 2.3 or 2.5 GHz band (including WiMax, LTE, and UMB)

When Activity Reports are used, it is the PAL which is aware of its unavailability which may generate the interference information. The PAL can determine the information to include in the Activity Report through methods including, for example, the PTA model described in [3]. In many systems with collocated radios there are PTA signals between the BR/EDR and 802.11 controllers which may be used to generate this information.

The information shall be transferred between the communicating 802.11 PALs using a PAL Activity Report PDU encapsulated in an 802.11 data frame. The frame body of the Activity Report PDU following the LLC/SNAP header is shown in Table 5.3. It has a variable length.

Activity Report *Size: Variable*

Value	Octets	Description
ScheduleKnown	1	Bit 0: 1 if the sender knows the schedule of interference 0 if the sender does not know the schedule of interference
NumReports	1	The number of traffic reports in this PDU
StartTime	4	The absolute time of the start of possible unavailability of the peer, expressed as the least significant 32 bits of the 802.11 TSF of the transmitter of the PDU.
Duration	4	Duration of the active phase of the traffic in microseconds.
Periodicity	4	Periodicity of traffic in microseconds. May be zero to indicate aperiodic traffic.

Table 5.3: Activity Report

Processing of received Activity Reports is optional and support for it is advertised in the 802.11 PAL Capabilities field.

The ScheduleKnown field shall indicate to the receiver of the Activity Report whether or not the sender is aware of the schedule of subsequent data traffic.

- If the ScheduleKnown is set to zero, this shall signify the sender is aware of the presence of traffic but not its schedule, and the receiving PAL shall configure the MAC with RTS/CTS signaling for all traffic on the physical link to the sender.
- If the ScheduleKnown is set to one, the sender shall describe the schedule of interference in the subsequent fields; the receiver of the report may either schedule all 802.11 AMP traffic around this schedule, configure the MAC with RTS/CTS signaling, or both.

If a PAL knows there is no interference from collocated radios before or during establishment of a physical link, an Activity Report conveying this state should be sent at the earliest possible opportunity after the physical link is established.

The StartTime, Duration and Periodicity form an Activity Report triplet. The difference between the StartTime and the current TSF of the peer shall be interpreted as a signed 32 bit value. A negative value shall denote a time in the past. The NumReports value indicates the number of Activity Report triplets which follow. The Duration shall specify the amount of time (in microseconds) the PAL is in the mode specified. If the ScheduleKnown field is zero, there shall be no Activity Report triplets and the NumReports field shall be zero. If the Periodicity is non-zero, it shall be a value greater than the Duration.

An Activity Report may be created to describe a burst of interfering traffic by setting ScheduleKnown to one, NumReports to one, StartTime to the time the burst is predicted to start, Duration to the duration of the burst, and Periodicity to zero.

The PAL may inform its peer that interference is no longer present by sending an Activity Report with a ScheduleKnown field set to one, and a NumReports field set to zero. Upon reception of such an Activity Report frame, a receiving PAL may configure the MAC without RTS/CTS signaling.

The PAL may transmit an Activity Report frame periodically in order to correct clock drift between its TSF and the schedule of unavailability caused by the collocated radio. The most recent Activity Report shall supersede all others received.

5.3 EXPLICIT FLUSH

Explicit flush may be initiated at the HCI on any logical link by using the HCI_Enhanced_Flush command. Explicit flush discards all data frames for transmit on the indicated logical link.

5.4 AUTOMATIC FLUSH

If guaranteed logical links are supported, then automatic flush timeouts shall be supported by the 802.11 PAL.

5.5 QUALITY OF SERVICE VIOLATIONS

The PAL may generate a HCI QoS Violation event when it is determined that the parameters of the flow spec are not being met. This may occur for instance when a data packet has been queued for transmission on a Guaranteed logical link for longer than the Access Latency in the flow spec for transmitted traffic on that link. It can also occur when a data packet fails to receive an acknowledgement before the specified flush timeout.

6 CONSTANTS

Name	Value	Units	Description
Max80211PALPDUSize	1492	Octets	Maximum PDU size
Max80211AMPASSOCLen	672	Octets	Maximum length of AMP_ASSOC for this AMP
MinGUserPrio	4	N/A	Minimum value of user priority for guaranteed link
MaxGUserPrio	7	N/A	Maximum value of user priority for guaranteed link
BEUserPrio0	0	N/A	Best effort User Priority
BEUserPrio1	3	N/A	Best effort User Priority
Max80211BeaconPeriod	2000	milliseconds	Maximum value of AMP dot11BeaconPeriod MIB variable
ShortRangeModePowerMax	4	dBm	Maximum transmit power for ERP-OFDM frames when in Short Range Mode

Table 6.1: 802.11 PAL Constants

7 MESSAGE SEQUENCE CHARTS

The MSCs necessary to show the creation and deletion of physical and logical links can be found in the HCI specification (see [Vol 2] Part E), as the sequencing of steps is determined by the logical HCI. However, an overview MSC for physical link creation is given in Figure 7.1.

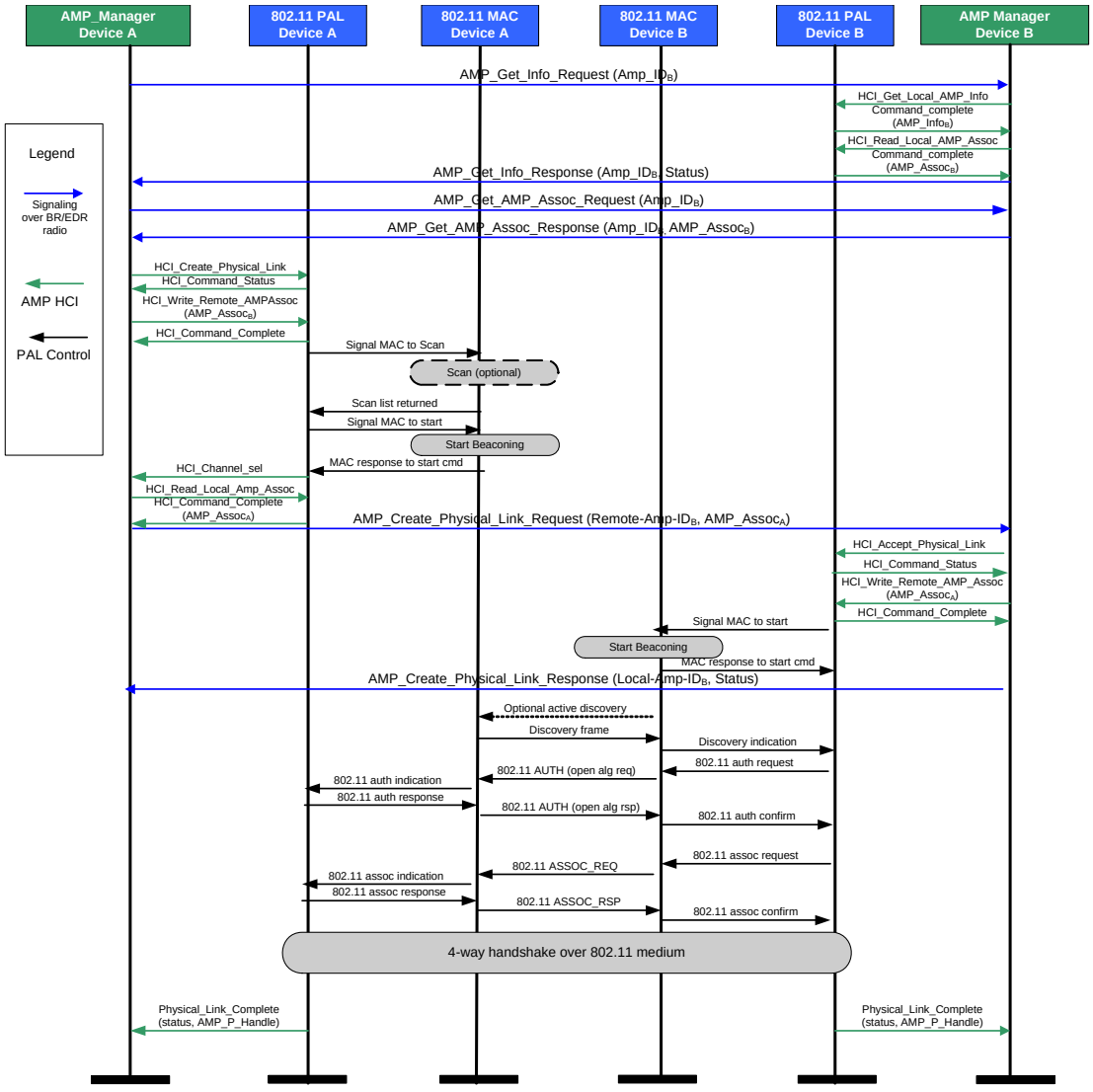

Figure 7.1: Overview MSC for physical link create/accept

8 APPENDIX A: TEST SUPPORT

This section provides the details of the AMP test commands and events described in [Vol 2] Part E.

8.1 AMP TEST COMMAND

Command	OCF	Command Parameters	Return Parameters
HCI_AMP_Test	0x0009	Test Parameters	Status

Description:

This command is used to configure and start a test. This command shall be only valid in AMP Test Mode.

When a test scenario has completed or on receiving a HCI_AMP Test_End command the AMP shall send a HCI AMP Test End event and the AMP returns to an idle state with the RX and TX off.

Test Parameters: *Size: 18 octets*

Value	Parameter Description
0xXX	Test Scenario 0x01 - Transmit single frames with following parameters 0x02 - Receive frames with following parameters 0x03 – 0xFF Reserved
0xXX	Preamble 0x00 – ERP-OFDM preamble 0x01 - Short Preamble 0x02 - Long preamble 0x03 – 0xFF Reserved
0xXX	Payload 0x00 – All Zeros payload 0x01 – All ones payload 0x02 - PRBS9. The PRBS9 sequence is reinitialized for every frame. Each PRBS9 payload is the same. 0x03 - PRBS15. The PRBS15 sequence is reinitialized for every frame. Each PRBS15 payload is the same. 0x04 – 0xFF Reserved

0xXXXXXX	Country	Channel Descriptor For AMP type 802.11, the channel is completely described by a four-tuple of {Country, Regulatory Extension Identifier, Regulatory class, Channel number}. The Country identifier is an ISO/IEC-3166 three-octet field and the Regulatory Extension Identifier is equal to 201. If the locale is unknown to the EUT, then it shall only allow channel numbers as given in Ref [2] Clause 18.4.6.2. Valid values are from 1 to 11. All other values are reserved
0xC9	Regulatory Extension Identifier	
0xXX	Regulatory Class	
0xXX	Channel Number	
0xXX	Modulation 0x00 ERP-DSSS 0x01 ERP-CCK 0x02 ERP-OFDM 0x03 ERP-PBCC 0x04 DSSS-OFDM 0x05 OFDM All other values are reserved	
0xXX	Rate (Mb/s) Transmission data rate of PSDU. See Ref [2] Clause 19.8.2 PHY MIB dot11SupportedDataratesTxValues The allowed data rates are dependant on the modulation selected. Ref [2] Table 19.1 Clause 19.2 and Clause 17.2.3.3. All other values reserved	
0xXXXX	Payload length 1 to 1500. All other values reserved.	
0xXX	Transmit Power Control (TPC) Valid values are 1 to 8 as defined in the Ref [2] implementation dependent. All other values reserved.	
0xXX	Duty Cycle 10 to 99% (default 50%) All other values reserved.	
0xXXXX	Frame count 1 to 65525 - Number of frames to be transmitted. When the defined frame count has been transmitted the system returns to the idle state and the AMP Test End event is returned to the tester. On receiving the Test End command the AMP returns to idle state.	
0xXX	Scramble state 0x00 – OFF 0x01 – ON All other values reserved.	

Return Parameters:

Status: *Size: 1 Octet*

Value	Parameter Description
0x00	AMP Test command succeeded
0x01-0xFF	Test command failed. See "Error Codes" on page 335 [Part D].

Event(s) Generated (unless masked away):

When the AMP receives the HCI_AMP_Test command, the AMP shall send the Command_Status event to the AMP Test Manager which shall be routed to the tester.

The HCI AMP Start Test event shall be generated when the HCI_AMP_Test command has completed and the first data is ready to be sent or received.

The HCI Command Complete event shall not be sent by the AMP to indicate that this command has been completed. Instead the HCI AMP Start Test event shall indicate that this command has been completed.

When in a transmitter test scenario and the frames/bursts count have been transmitted the HCI AMP Test End event shall be sent.

8.1.1 Test Scenarios

All test mode frames shall be test mode data frames.

Single Frame Transmission

When the test scenario is set to transmit single frames the format shall be as defined by the parameters in the rest of the test configuration parameters. The interval between frames shall be as defined by the transmission interval time.

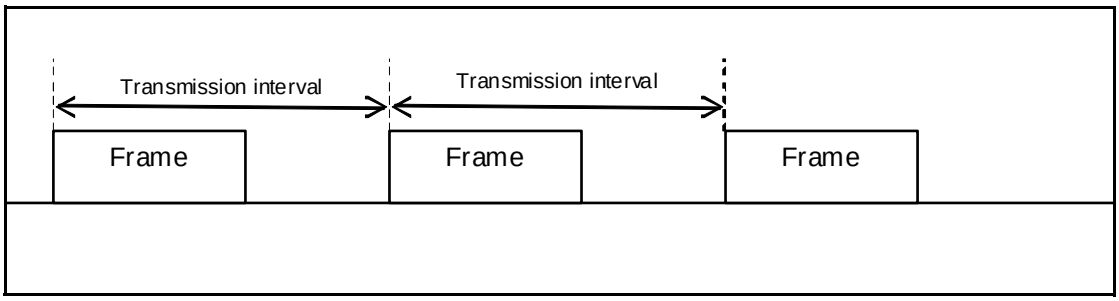

Figure 8.1: Single Frame test transmission

The transmissions shall continue until the frame count is reached or a test end command is received; when a HCI AMP Test End event shall be sent to the tester via the AMP Test Manager.

The requirements of the frames are described in the Test mode data frame format section.

Receive Frames

When the test scenario is set to receive frames the AMP shall receive the frames defined in the other test scenario parameters and, when AMP receiver reports are configured, return receiver reports as defined to the tester via the AMP Test Manager.

8.1.2 Test Mode Data Frame Format

The frames transmitted in test mode are not super frames. All frames shall be Data frames. The format of the frame agrees with the PHY frames in [2] section 19 with non connection test mode fixed fields.

Source and Destination Address

When performing the AMP PHY non connection tests these fields are fixed according to the direction of the message. The AMP shall use a fixed address AMP_TEST_ADDRESS and shall expect to receive frames with an AMP_TESTER_ADDRESS.

Parameter	Address
AMP_TEST_ADDRESS	0x5555 (0101010101010101 binary)
AMP_TESTER_ADDRESS	0xAAAA (1010101010101010 binary)

These are fixed addresses for testing purposes only.

The AMP shall transmit frames in the transmit test scenarios with the SrcAddr set to the AMP_TEST_ADDRESS and the DestAddr set to the AMP_TESTER_ADDRESS.

The AMP shall receive test frames in the receiver test scenarios with the SrcAddr set to AMP_TESTER_ADDRESS and the DestAddr set to the AMP_TEST_ADDRESS.

8.2 AMP START TEST EVENT

Event	Event Code	Event Parameters
HCI_AMP_Start_Test	0x49	Status Test Scenario

Description:

The HCI AMP Start Test event shall be generated when the HCI_AMP_Test command has completed and the first data is ready to be sent or received.

Event Parameters:

Status: *Size: 1 Octet*

Value	Parameter Description
0x00	Test command succeeded
0x01-0xFF	Test command failed. See "Error Codes" on page 335 [Part D].

Test Scenario: *Size: 1 Octet*

Value	Parameter Description
0xXX	0x01 - Transmit single 0x02 – Receive frames 0x00 and 0x03 – 0xFF Reserved

8.3 AMP TEST END EVENT

Event	Event Code	Event Parameters
HCI_AMP_Test_End	0x4A	Status Test Scenario

Description:

The HCI AMP Tes End event shall be generated to indicate that the AMP has transmitted or received the number of frames/bursts configured.

If the Receiver reports are enabled an HCI_AMP Receiver Report event shall be generated.

Event Parameters:

Status: *Size: 1 Octet*

Value	Parameter Description
0x00	AMP Test command succeeded
0x01-0xFF	Test command failed. See "Error Codes" on page 335 [Part D].

Test Scenario: *Size: 1 Octet*

Test Scenario for which the test end event has been generated.

Value	Parameter Description
0xXX	0x01 - Transmit single 0x02 – Receive frames 0x03 – 0xFF Reserved

9 REFERENCES

[1] IEEE 802.11-2007 Standard and Amendment 1 (Radio Resource Measurement)

[2] ISO/IEC 3166-2

[3] IEEE 802.15.2 Recommended Practice: Coexistence of WPAN with other wireless devices operating in unlicensed frequency bands

[4] Bluetooth SIG Company Identifiers https://www.bluetooth.org/Technical/AssignedNumbers/identifiers.htm

FIGURES

Figure 1.1: Internal structure of the 802.11 PAL 14
Figure 3.1: Physical Link finite state machine diagram 27
Figure 7.1: Overview MSC for physical link create/accept 52
Figure 8.1: Single Frame test transmission 55

TABLES

Table 2.1: TLV format 22
Table 2.2: TypeIDs used for 802.11 AMP TLVs 22
Table 3.1: DISCONNECTED State event table 30
Table 3.2: STARTING State event table 31
Table 3.3: CONNECTING State event table 31
Table 3.4: AUTHENTICATING State event table 32
Table 3.5: CONNECTED State event table 33
Table 3.6: DISCONNECTING State event table 34
Table 3.9: Mixed band preferred channel list example 36
Table 3.7: Simple preferred channel list 36
Table 3.8: Preferred channel list with non-contiguous channels 36
Table 3.10: Four address frame address fields 39
Table 3.11: EDCA advertisement and negotiation 42
Table 5.1: 802.11 AMP LLC/SNAP encapsulation 46
Table 5.2: Protocol Identifiers 46
Table 5.3: Activity Report 49
Table 6.1: 802.11 PAL Constants 51